US 20140206503A1

(19) United States

(12) Patent Application Publication

Stockmaster et al.

(10) Pub. No.: US 2014/0206503 A1

(43) Pub. Date: Jul. 24, 2014

(54) **MEDICAL REHAB LIFT SYSTEM AND METHOD WITH HORIZONTAL AND VERTICAL FORCE SENSING AND MOTION CONTROL**

(71) Applicant: **Gorbel, Inc.**, Fisher, NY (US)

(72) Inventors: **James G. Stockmaster**, Sodus, NY (US); **Brian G. Peets**, Fairport, NY (US); **Benjamin A. Strohman**, Rochester, NY (US); **Alexander Z. Chemyak**, Pittsford, NY (US); **Blake Reese**, Honeoye Falls, NY (US); **Dean C. Wright**, Fairport, NY (US); **Yi Luo**, Shenzhen (CN); **Li-Te Liu**, Taipei City (TW)

(73) Assignee: **Gorbel, Inc.**, Fishers, NY (US)

(21) Appl. No.: **14/160,613**

(22) Filed: **Jan. 22, 2014**

Related U.S. Application Data

(60) Provisional application No. 61/755,007, filed on Jan. 22, 2013.

Publication Classification

(51) **Int. Cl.**
A61H 3/00 (2006.01)

(52) **U.S. Cl.**
CPC *A61H 3/008* (2013.01)
USPC **482/4**

(57) **ABSTRACT**

A body-weight support system is disclosed, including an improved lift system and method. The system enables not only the support of patients undergoing rehab therapies, but including exercise modes that are both customizable and dynamic in nature, as well as a track system, wherein the system is capable of providing alternative functionality at differing locations. Other features disclosed include a system by which a movable support unit tracks or follows a patient, adjustable and variable supportive forces for users based upon, for example, a percentage of sensed body weight, and a user-interface that may be employed in a mobile, wired or wireless manner and will allow the use of multiple lift systems on a single, looped track system.

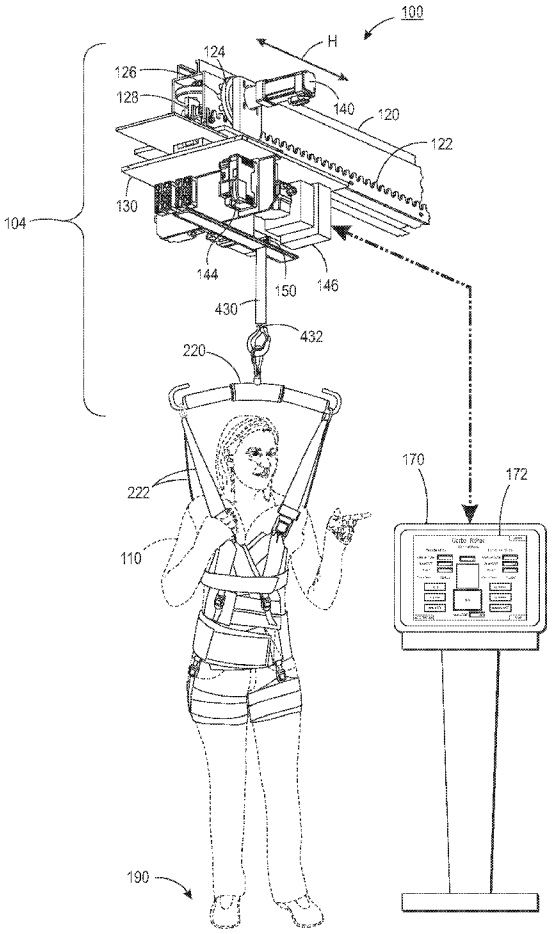

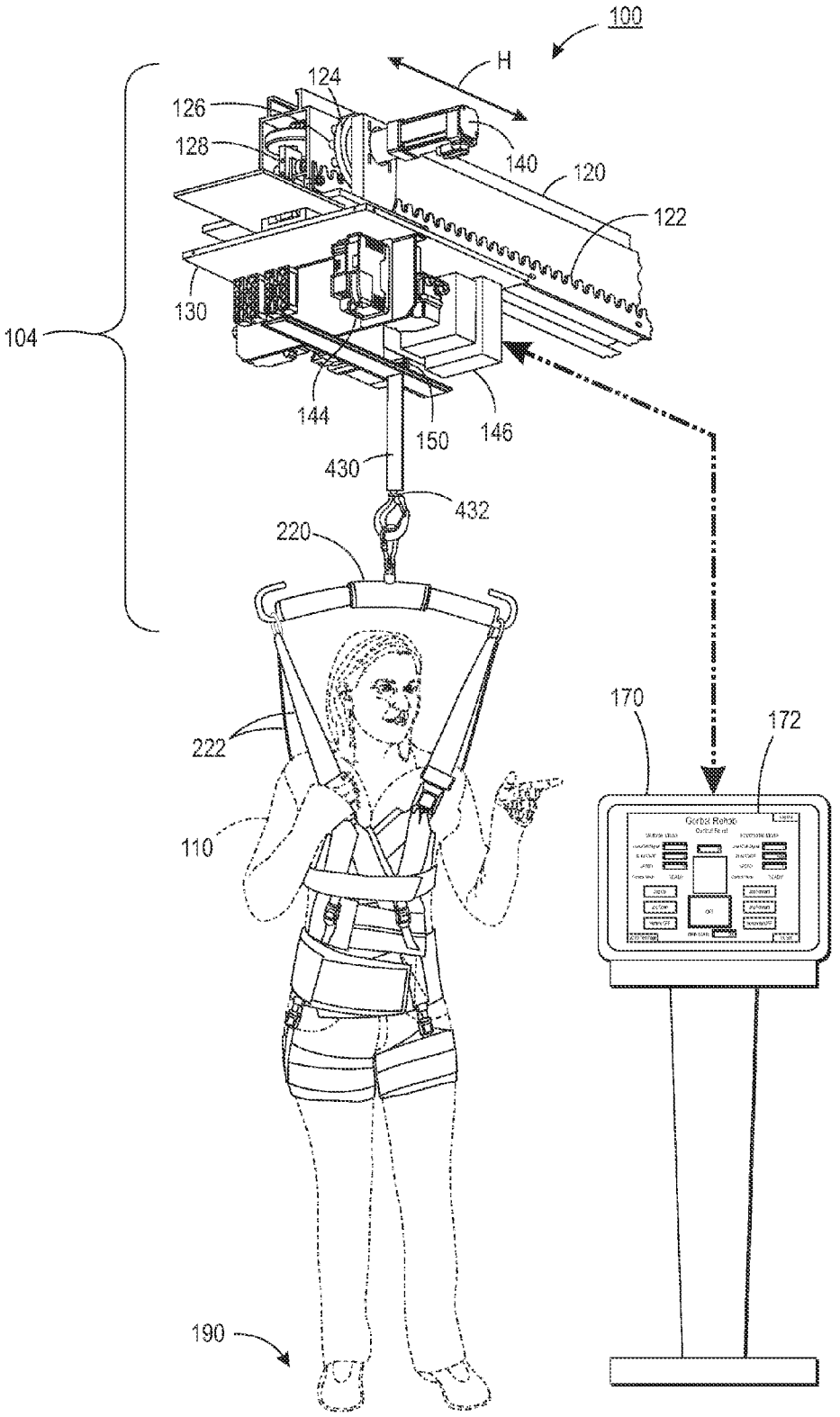
100
H
124
126
128
140
120
122
130
104
144
150
146
430
432
220
222
110
170
172
190

FIG. 1

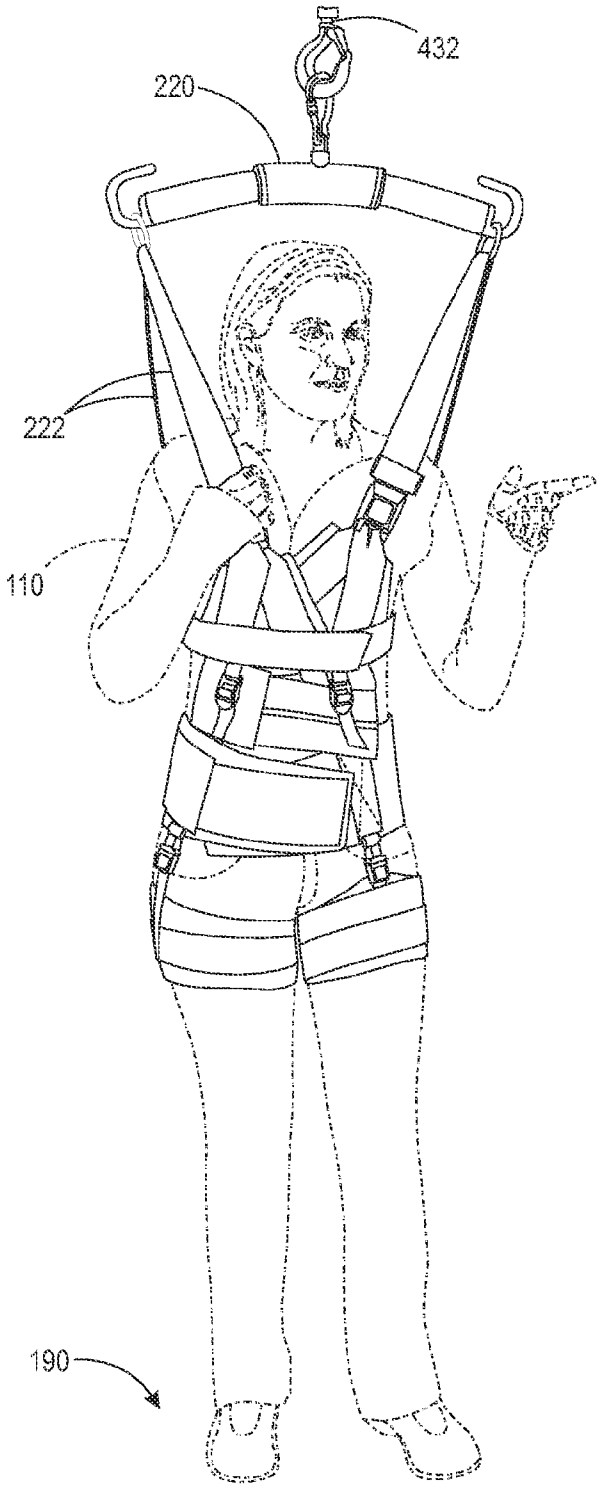

FIG. 2

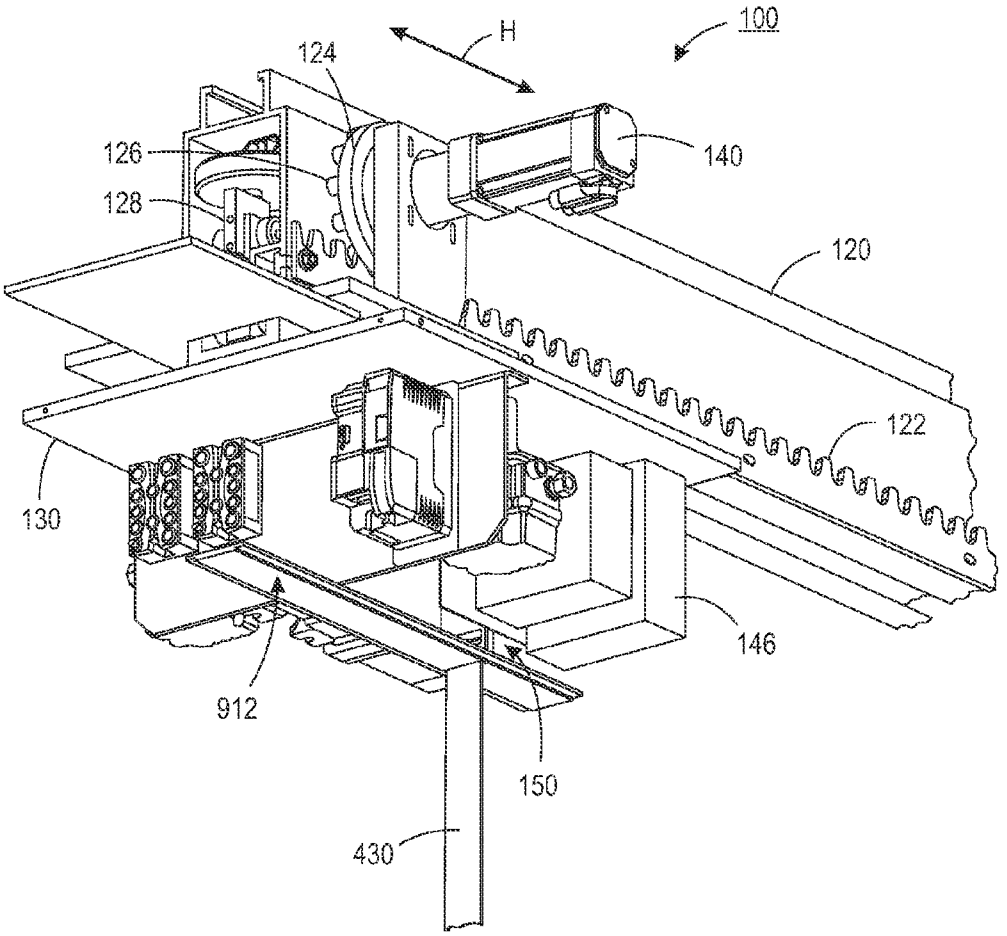

FIG. 3

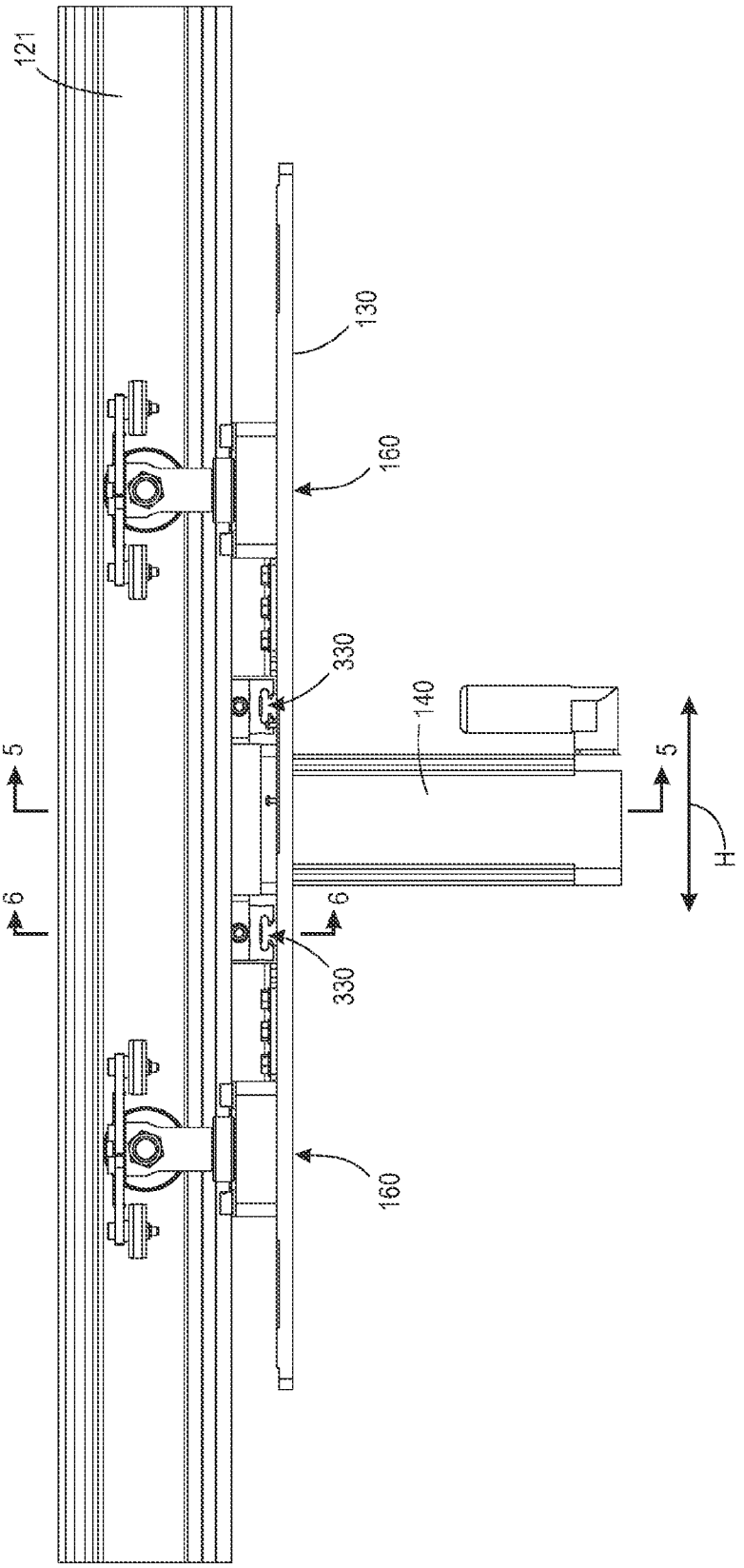

FIG. 4

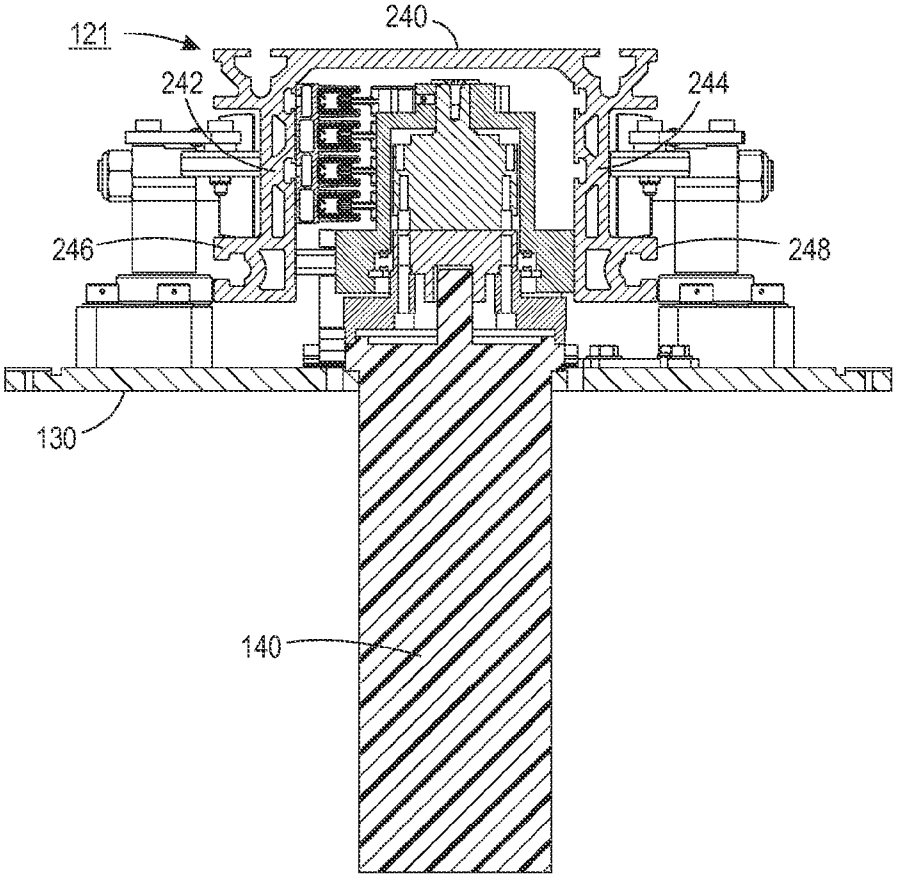

FIG. 5

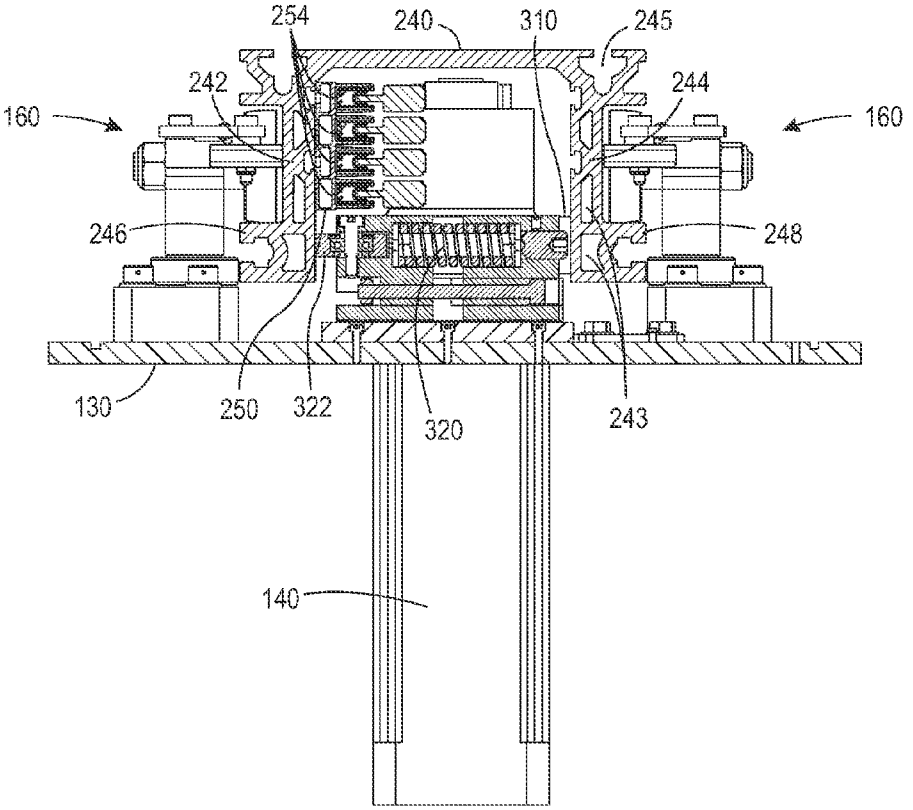
254
240
310
245
242
244
160
160
246
248
130
250
322
320
243
140

FIG. 6

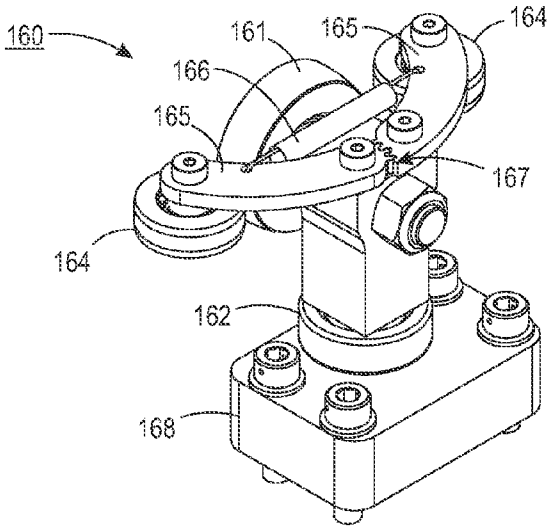
160
161
165
164
166
165
167
164
162
168

FIG. 7

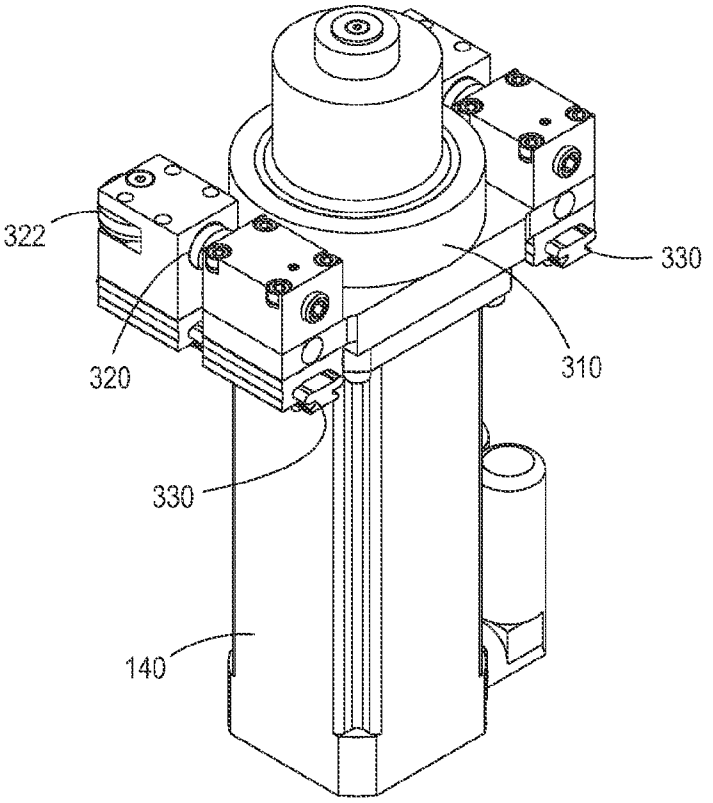

FIG. 8

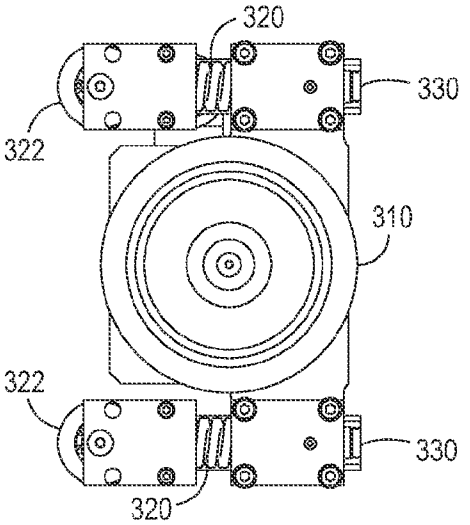

FIG. 9

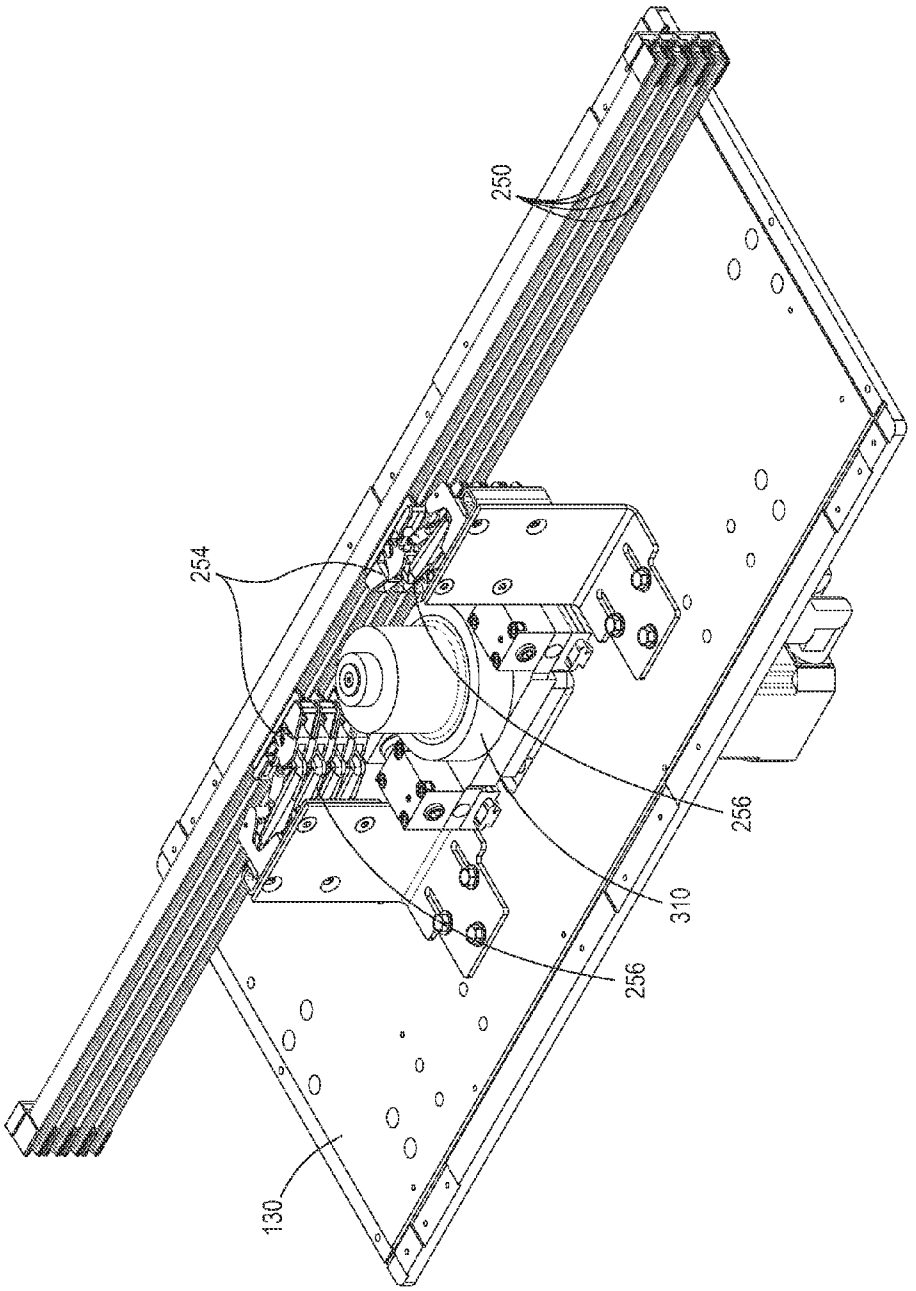

FIG. 10

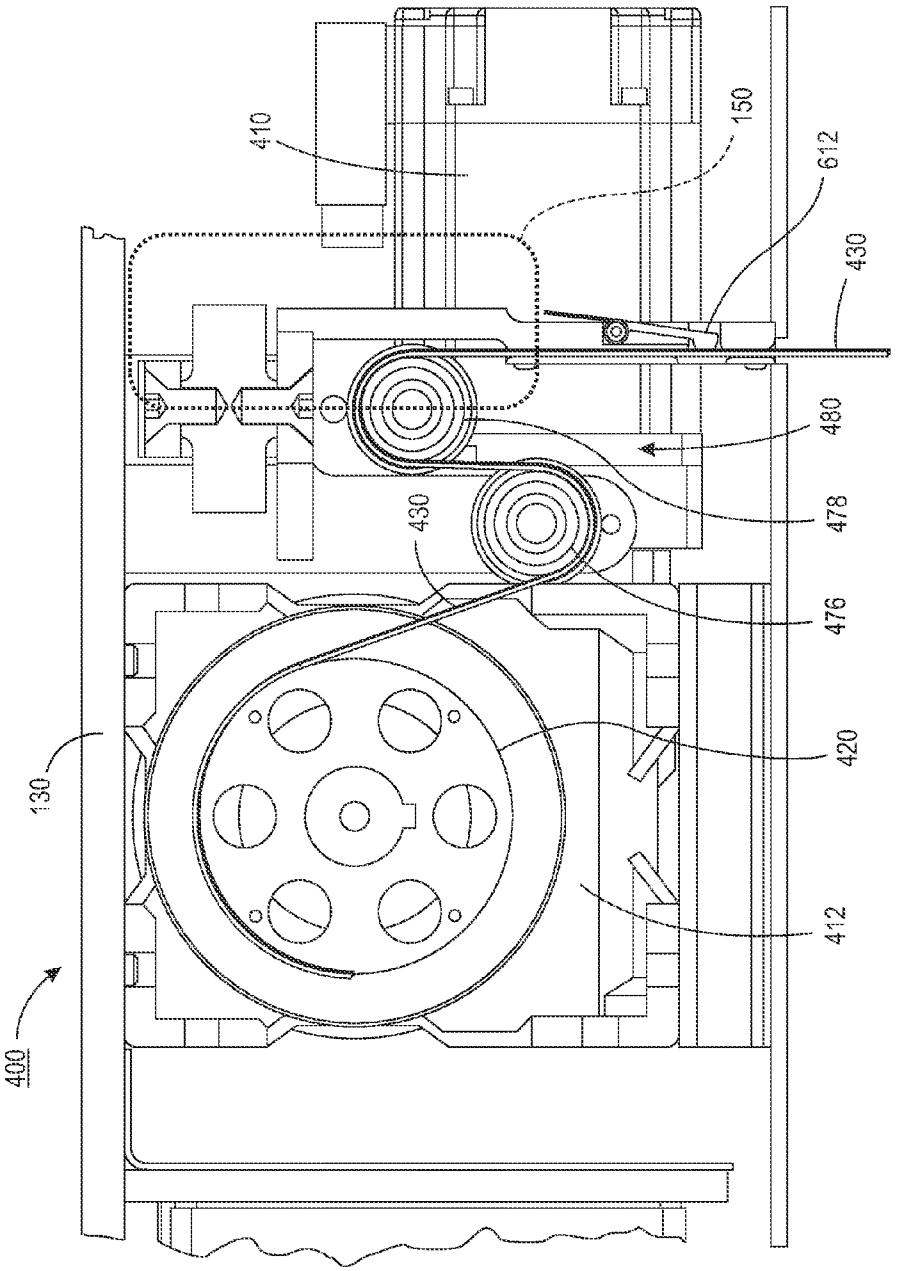

FIG. 11

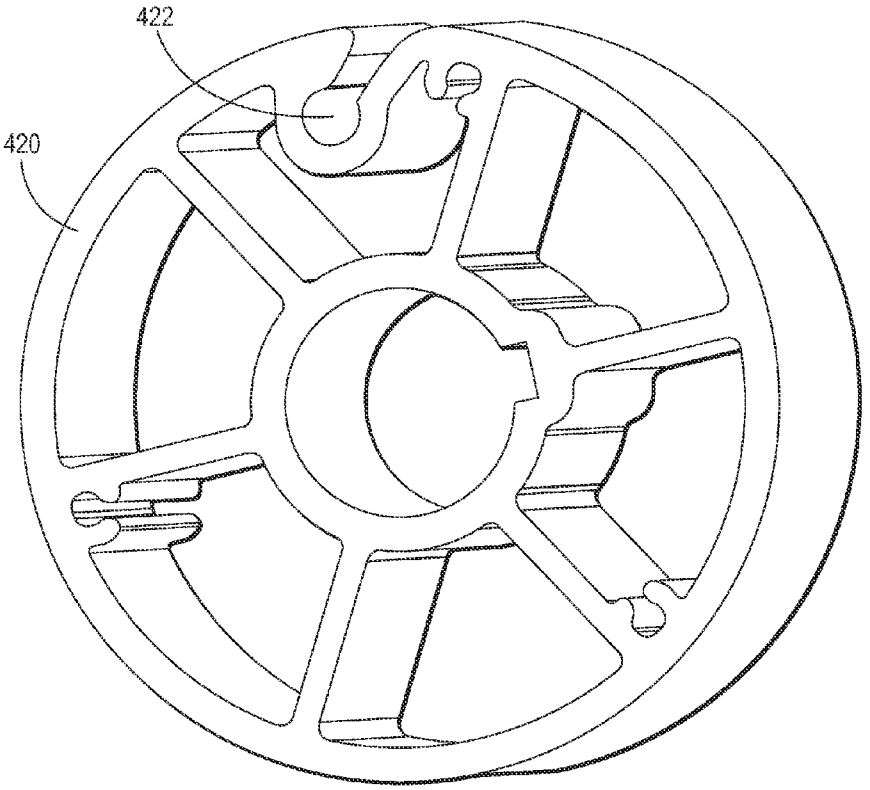

FIG. 12

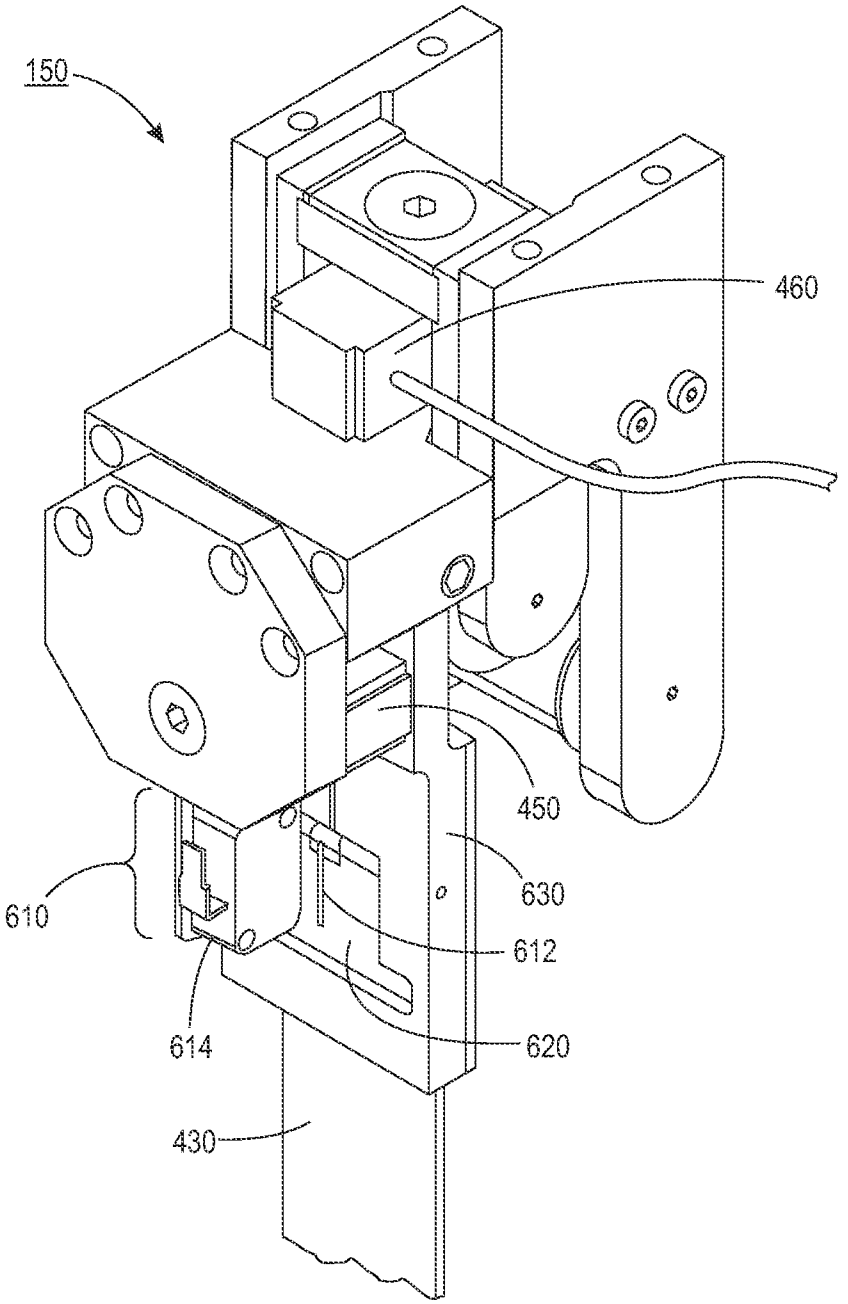

FIG. 13

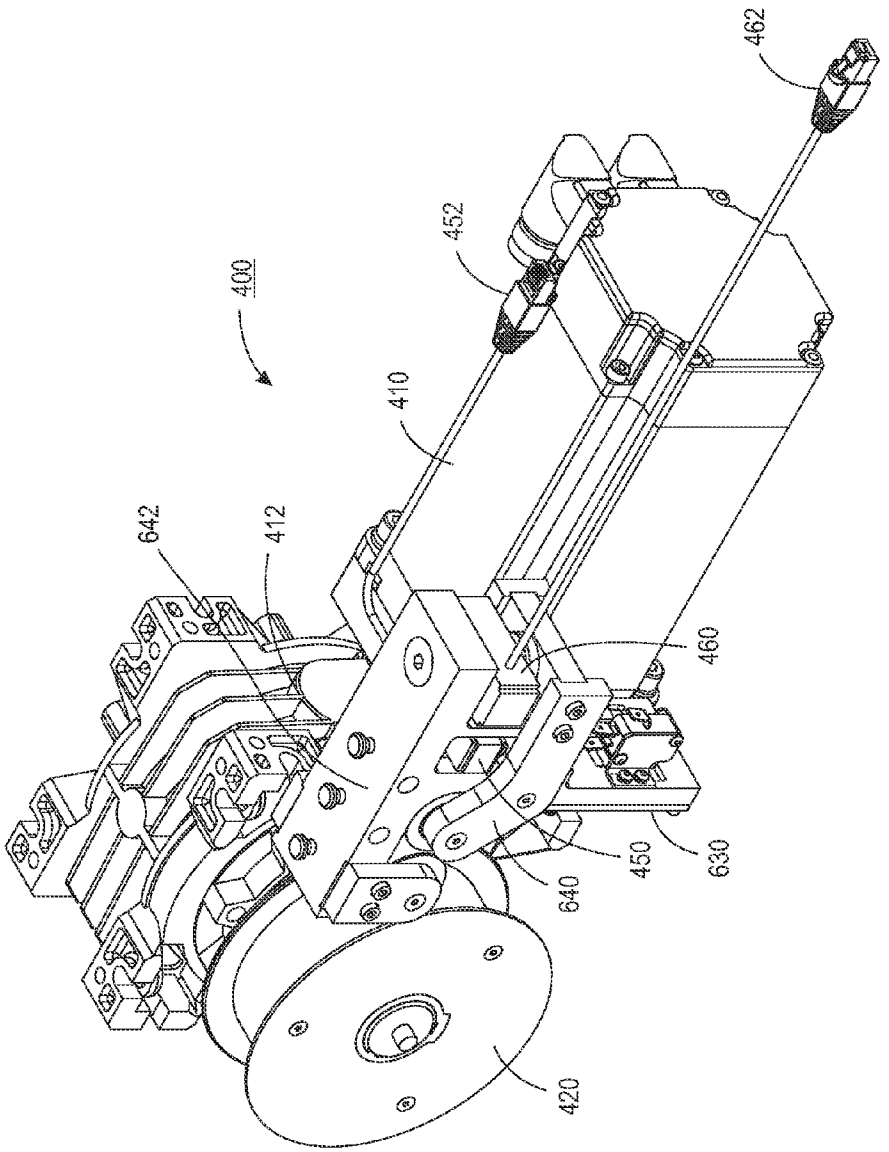

FIG. 14

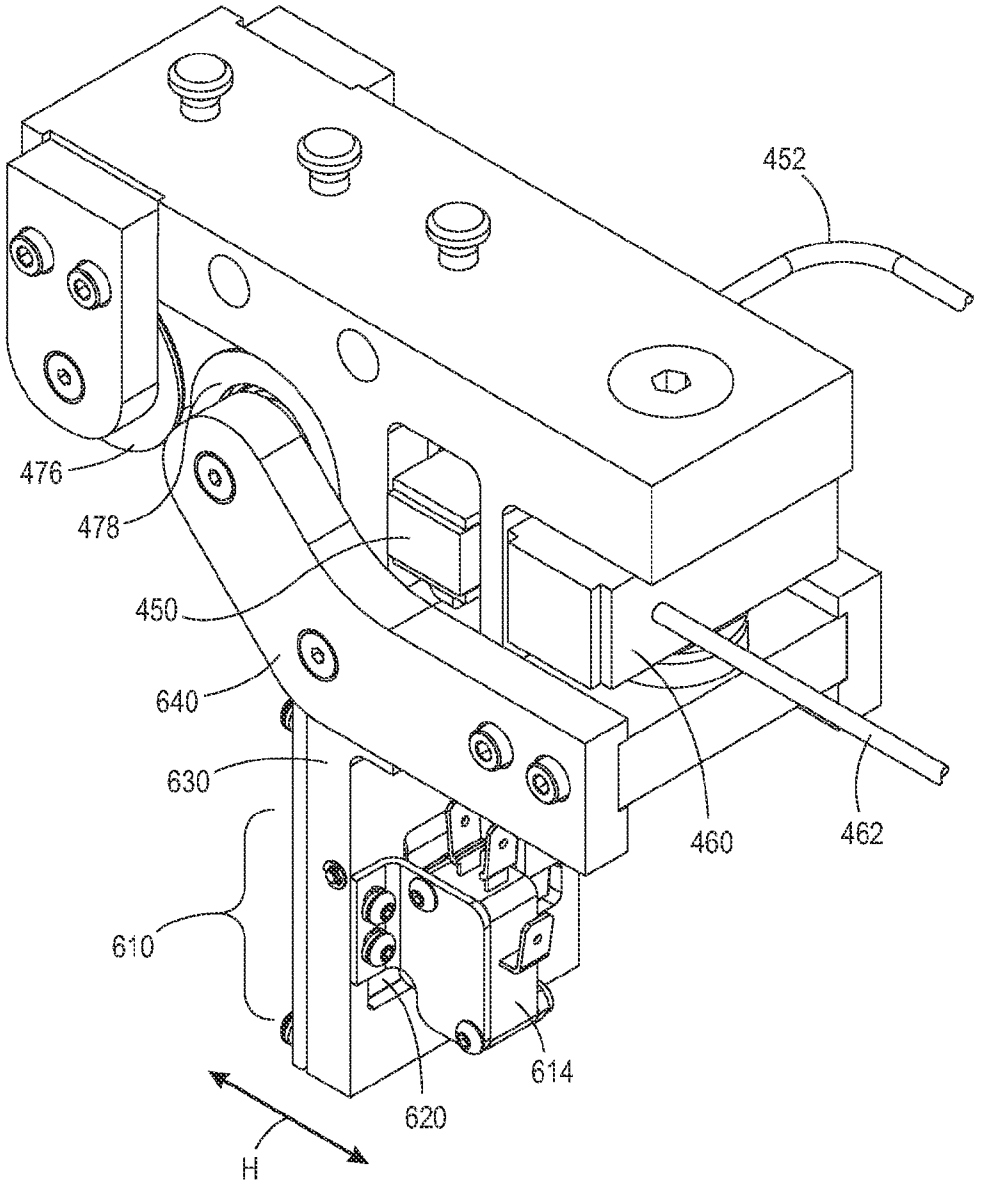

FIG. 15

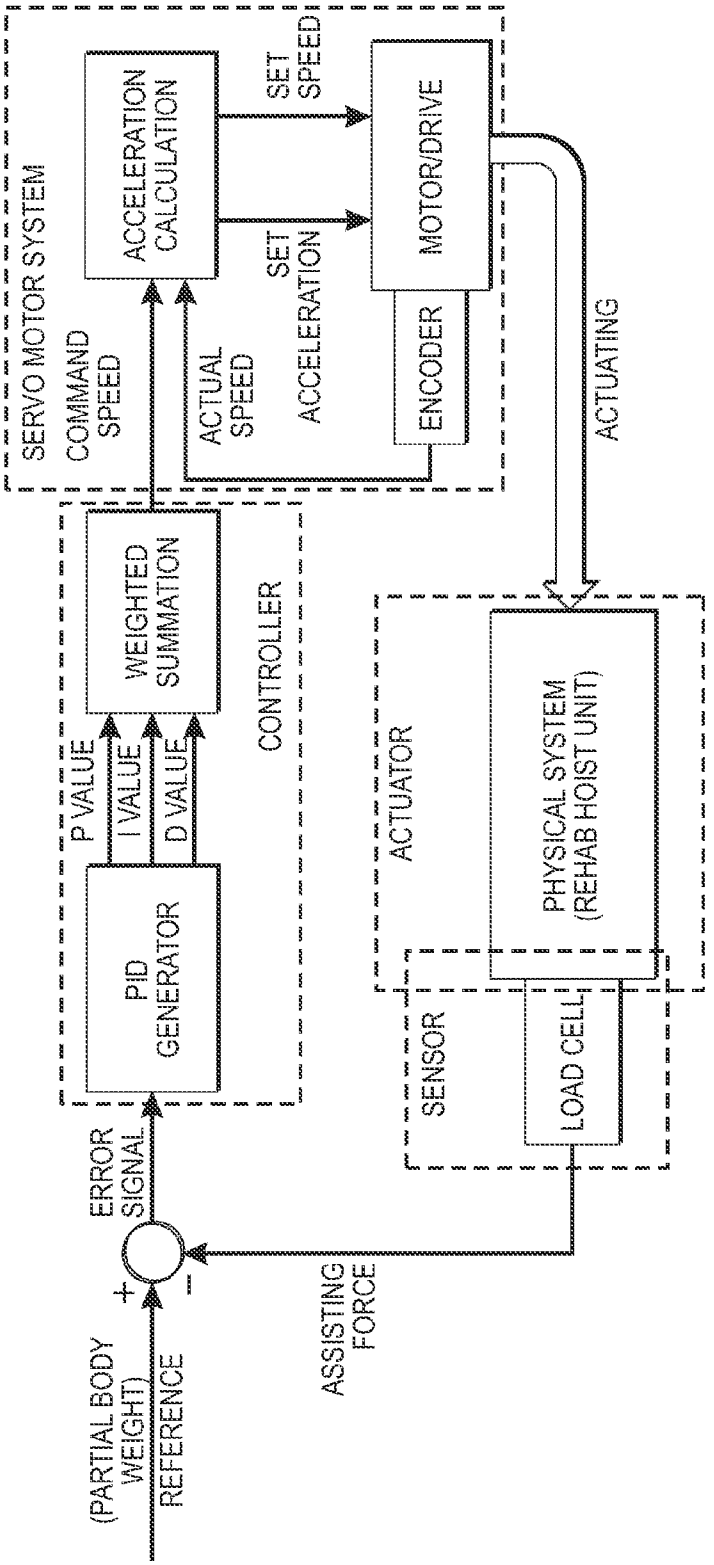
SERVO MOTOR SYSTEM
COMMAND SPEED
ACCELERATION CALCULATION
SET SPEED
SET ACCELERATION
MOTOR/DRIVE
ACTUAL SPEED
ENCODER
ACTUATING
WEIGHTED SUMMATION
CONTROLLER
P VALUE
I VALUE
D VALUE
PID GENERATOR
ACTUATOR
PHYSICAL SYSTEM (REHAB HOIST UNIT)
SENSOR
LOAD CELL
ERROR SIGNAL
+
−
(PARTIAL BODY WEIGHT) REFERENCE
ASSISTING FORCE

FIG. 16

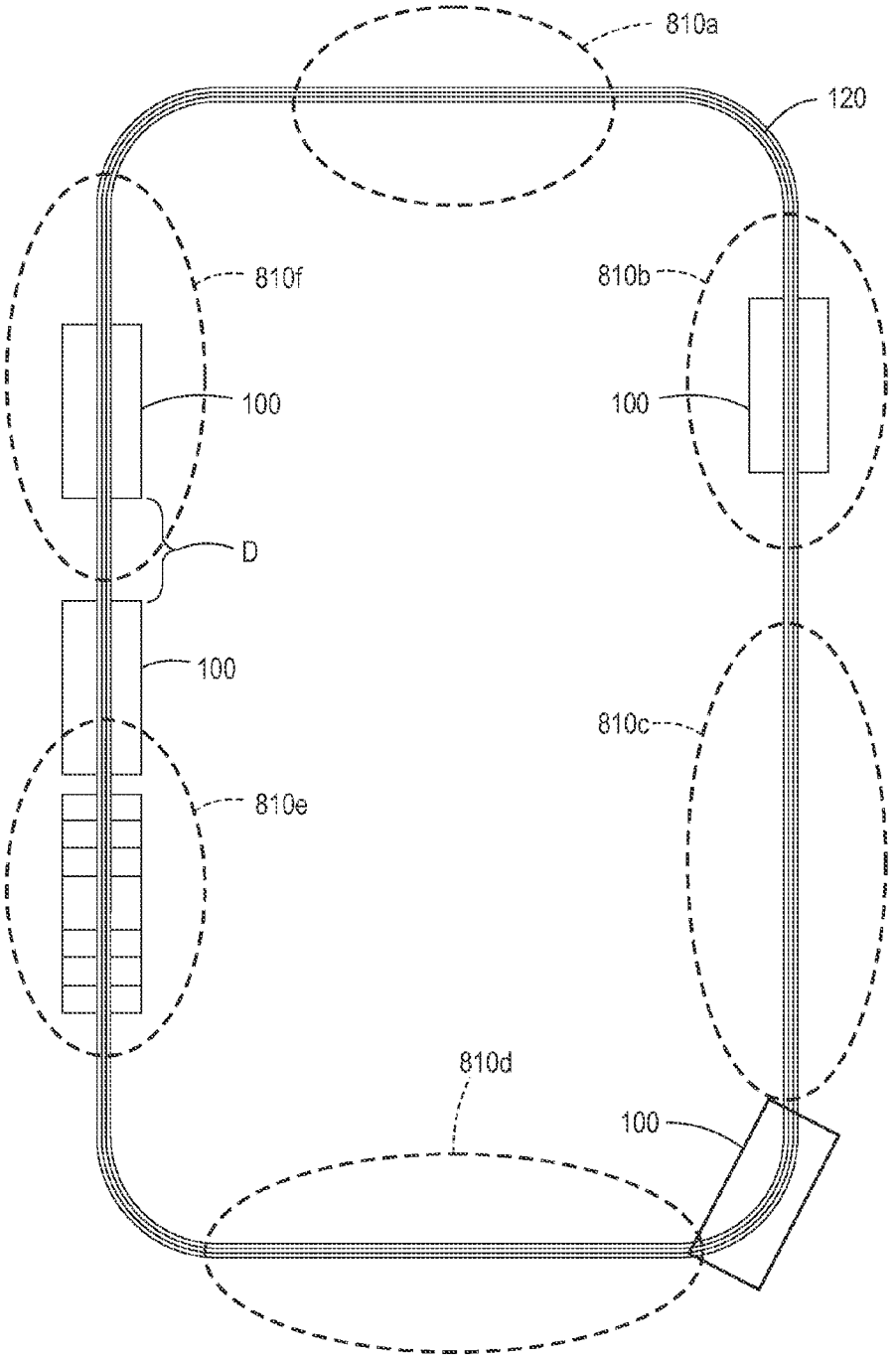

FIG. 17

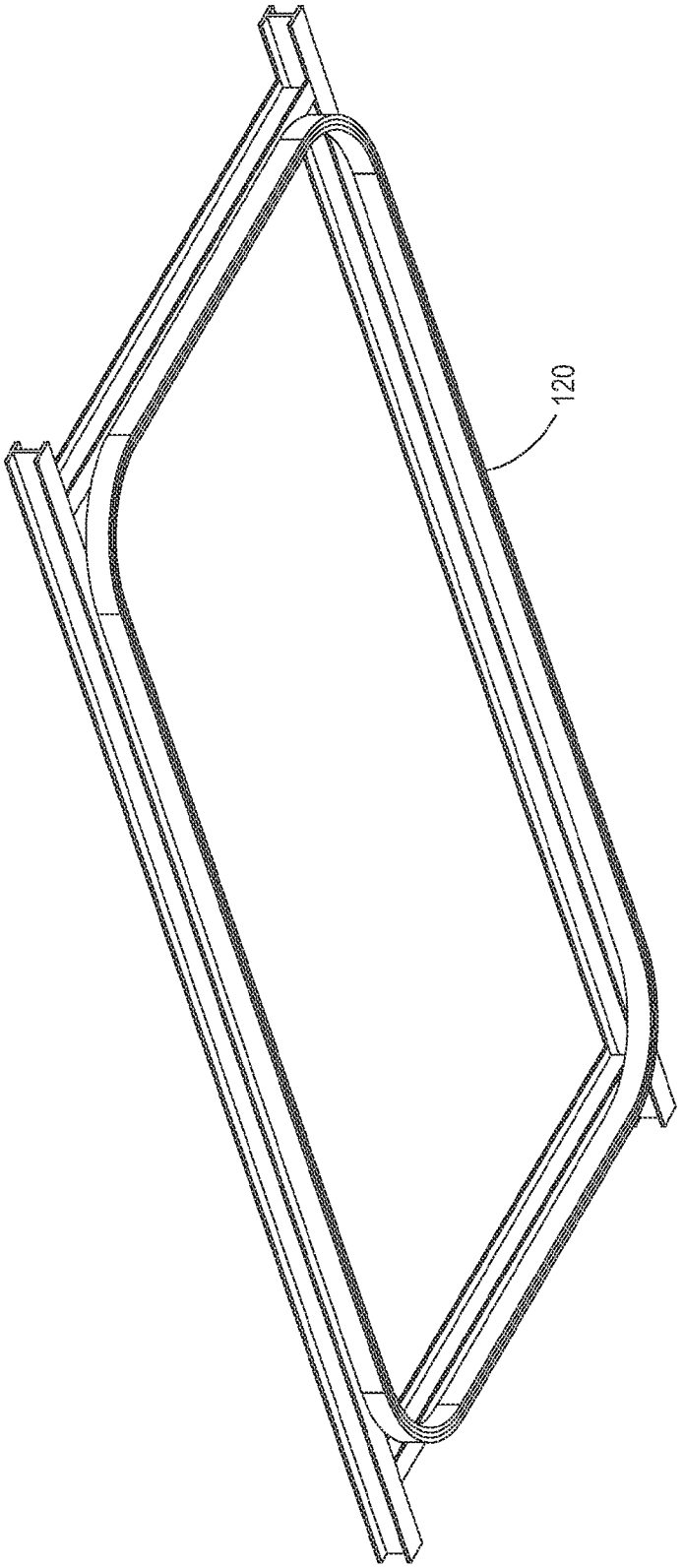

FIG. 18

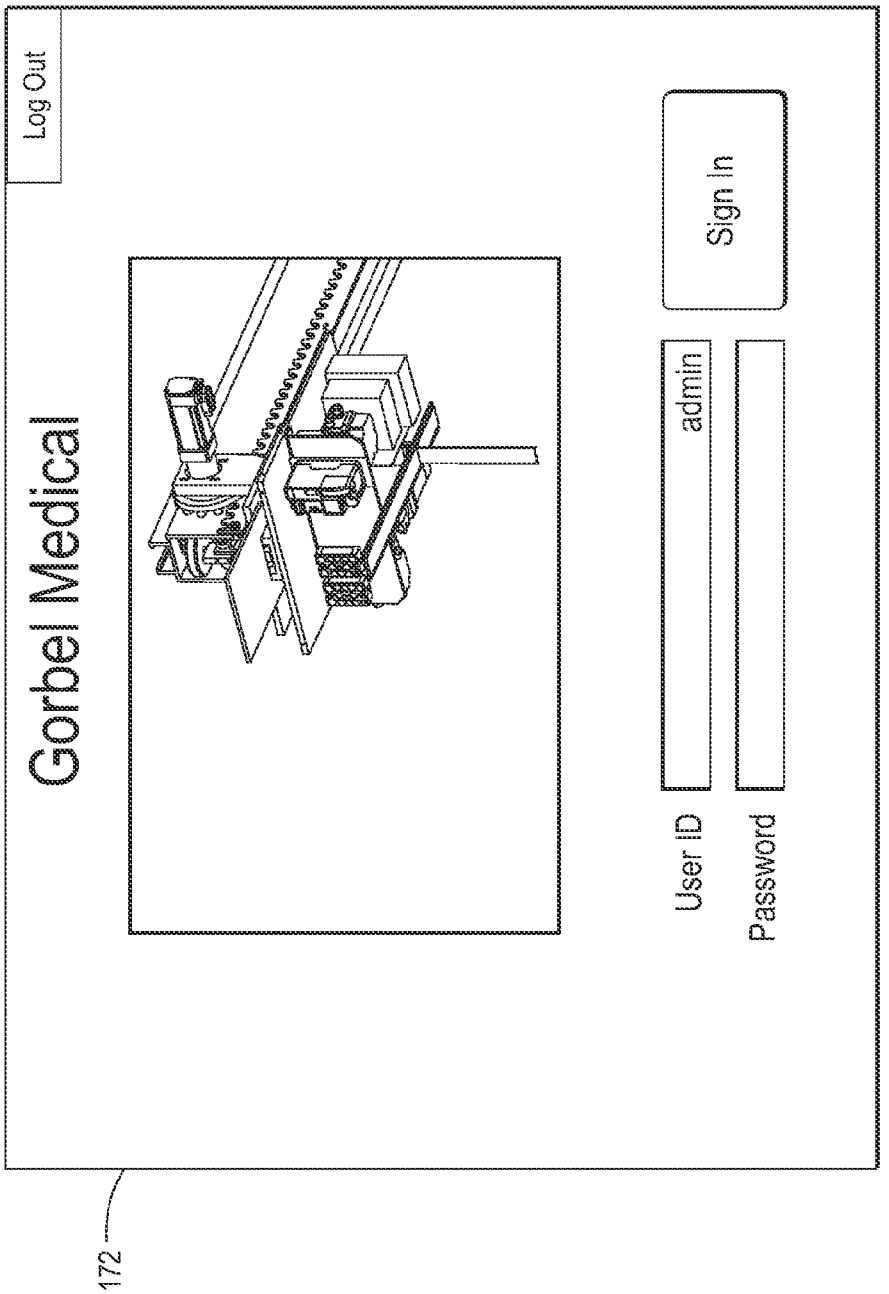

FIG. 19

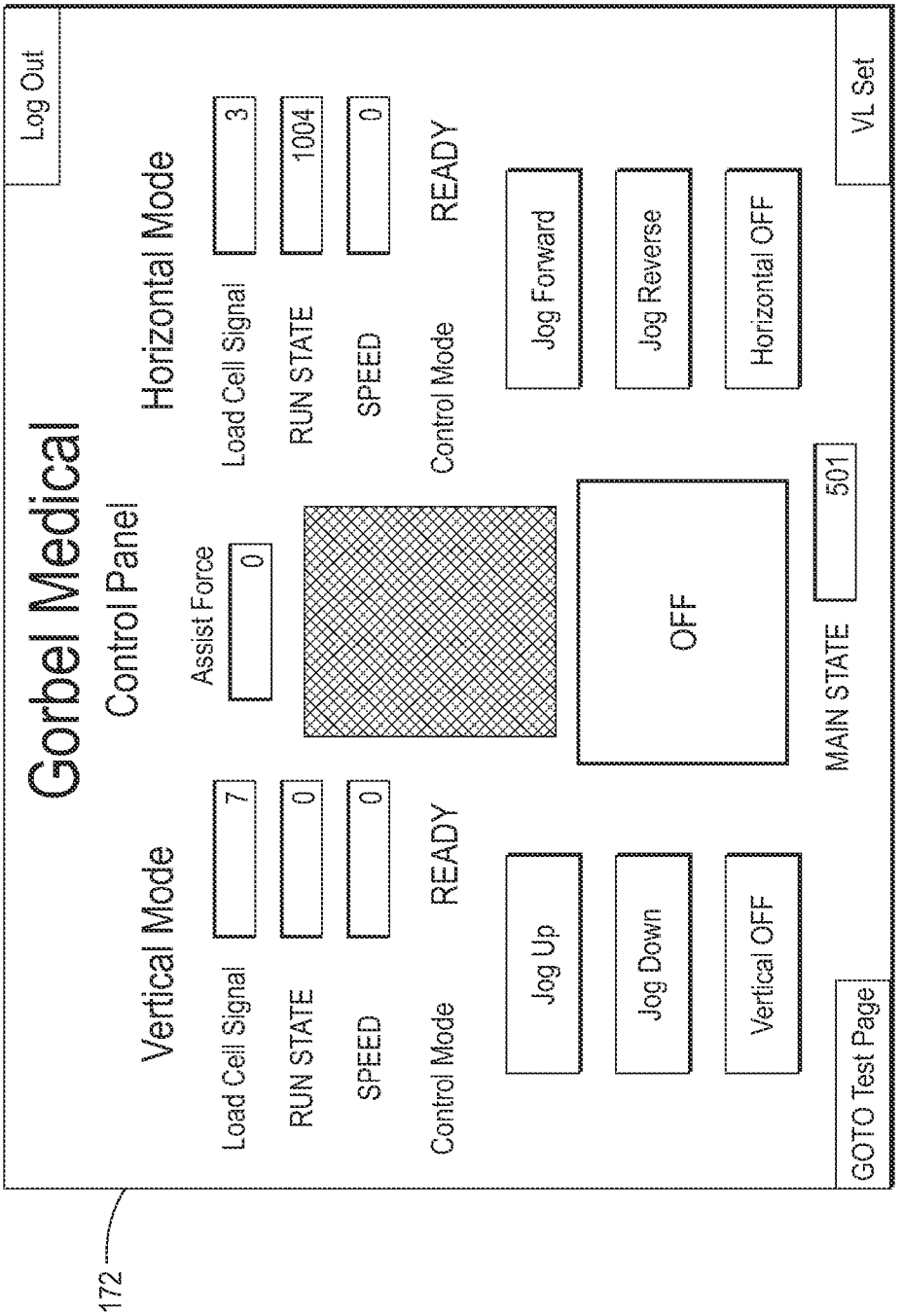
Log Out
Gorbel Medical
Control Panel
Vertical Mode
Load Cell Signal
7
RUN STATE
0
SPEED
0
Control Mode
READY
Jog Up
Jog Down
Vertical OFF
Assist Force
0
Horizontal Mode
Load Cell Signal
3
RUN STATE
1004
SPEED
0
Control Mode
READY
Jog Forward
Jog Reverse
Horizontal OFF
OFF
MAIN STATE
501
VL Set
GOTO Test Page
172

FIG. 20

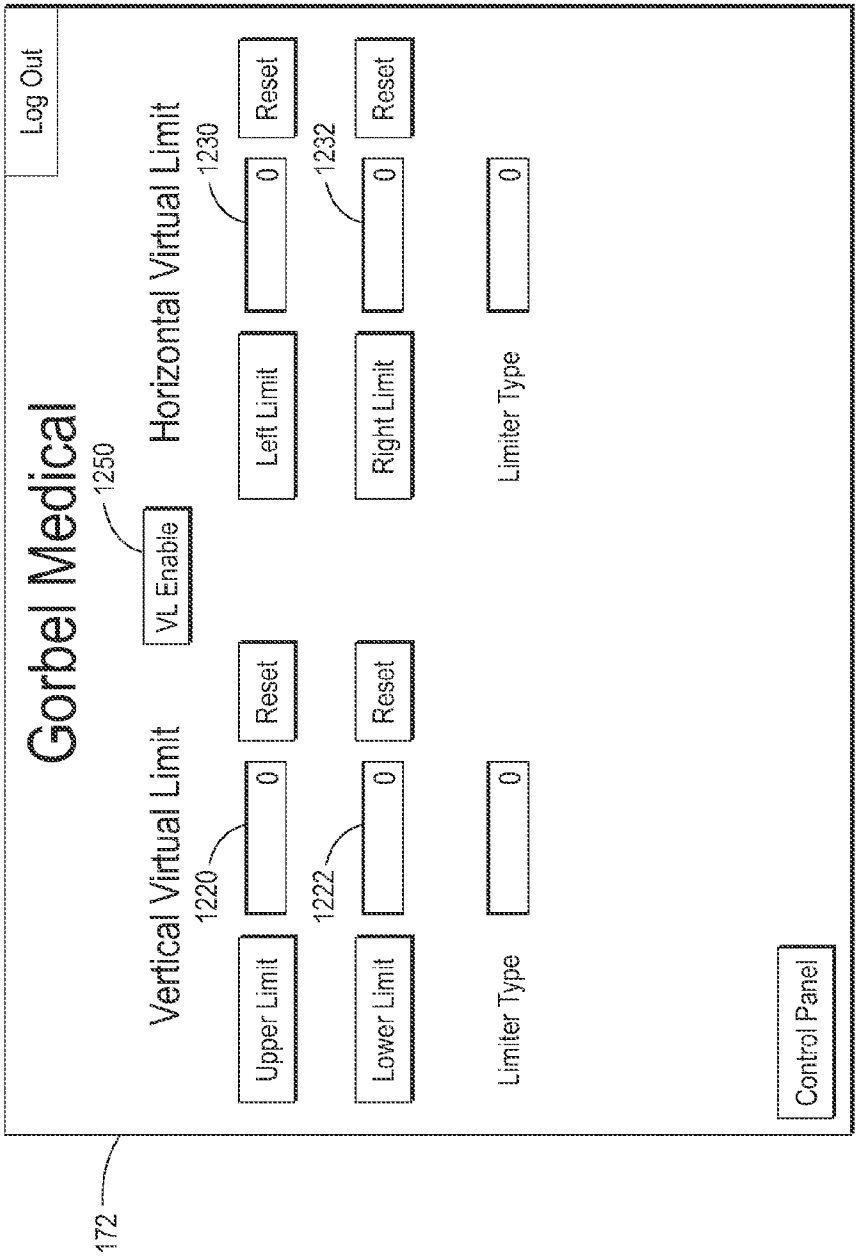
Log Out
Gorbel Medical
1250
VL Enable
Vertical Virtual Limit
1220
0
Reset
Upper Limit
1222
0
Reset
Lower Limit
0
Limiter Type
Horizontal Virtual Limit
1230
0
Reset
Left Limit
1232
0
Reset
Right Limit
0
Limiter Type
Control Panel
172

FIG. 21

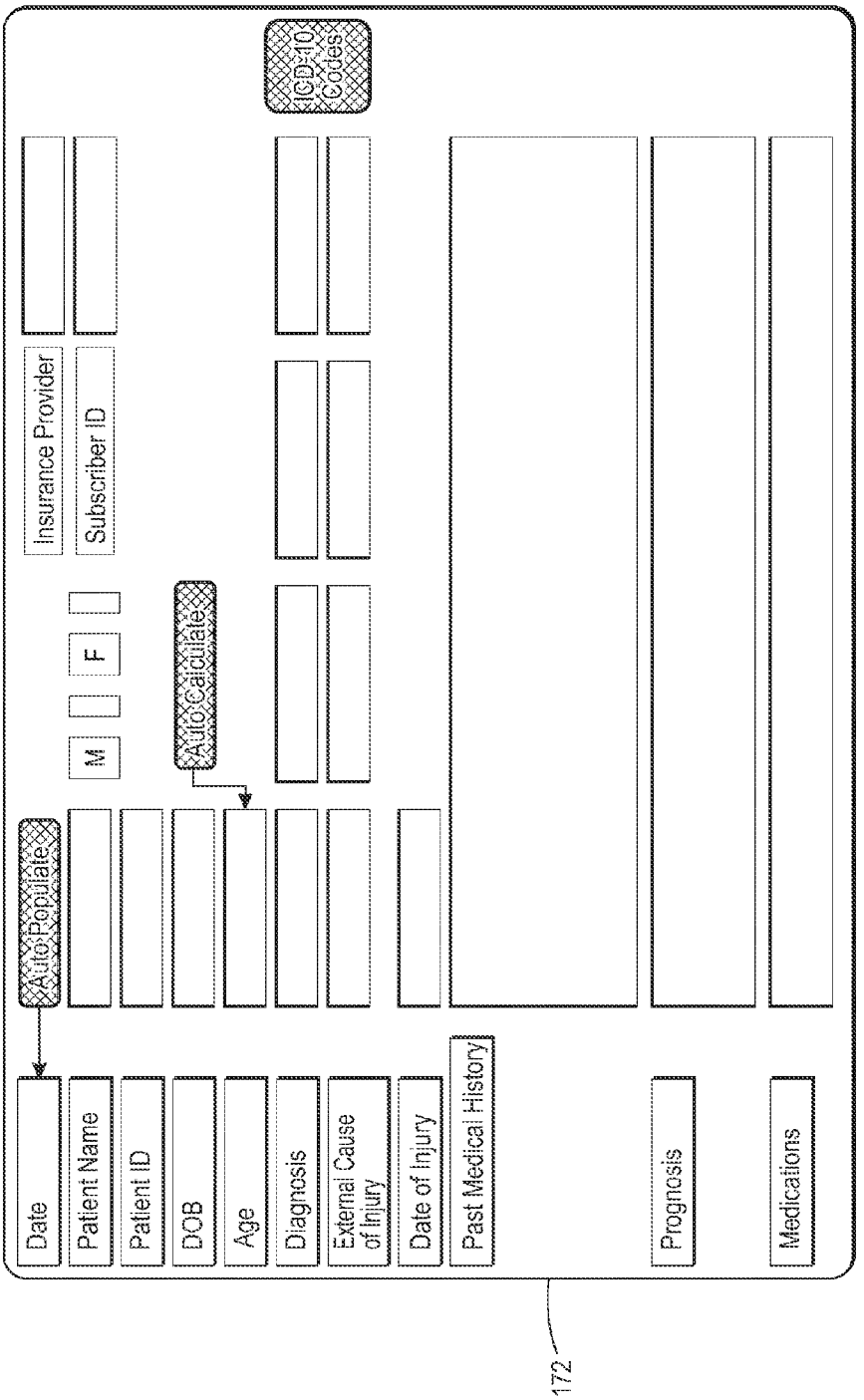
Auto Populate
Date
Patient Name
Patient ID
DOB
Age
Diagnosis
External Cause of Injury
Date of Injury
Past Medical History
Prognosis
Medications
M
F
Insurance Provider
Subscriber ID
Auto Calculate
ICD-10 Codes
172

FIG. 22

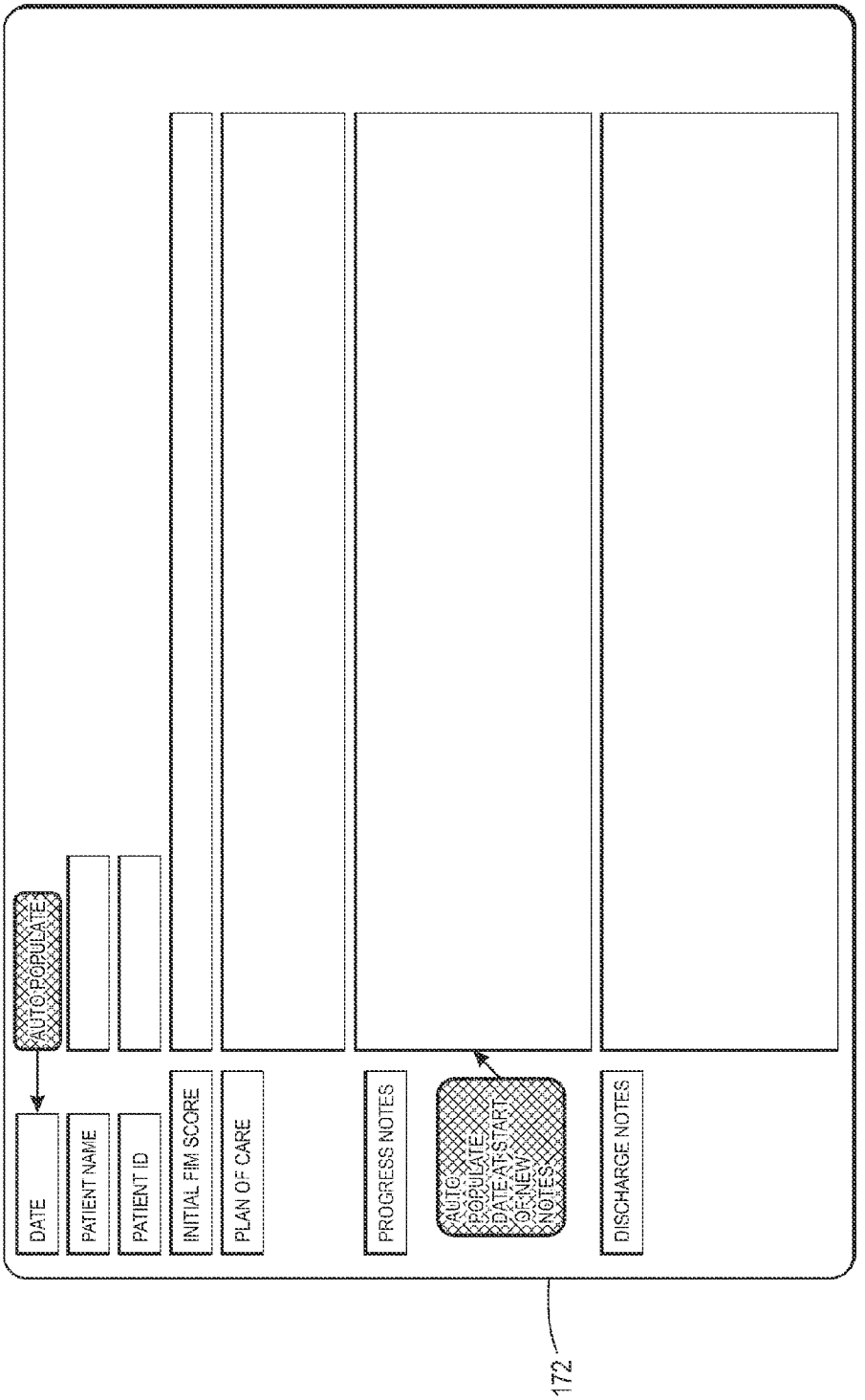
AUTO POPULATE
DATE
PATIENT NAME
PATIENT ID
INITIAL FIM SCORE
PLAN OF CARE
PROGRESS NOTES
AUTO POPULATE DATE AT START OF NEW NOTES
DISCHARGE NOTES
172

FIG. 23

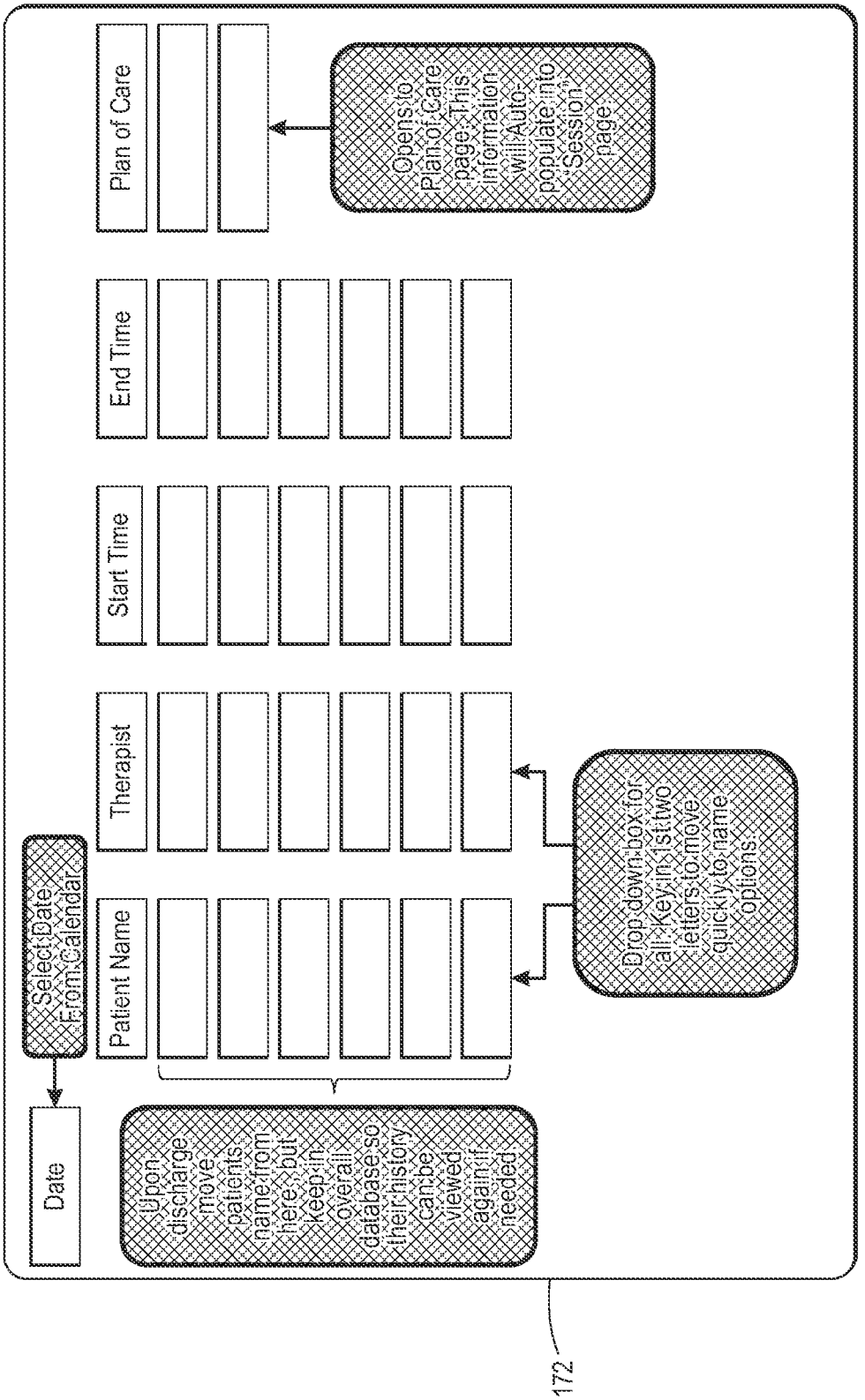
Date
Select Date From Calendar
Patient Name
Therapist
Start Time
End Time
Plan of Care
Upon discharge move patients name from here, but keep in overall database so their history can be viewed again if needed
Drop down box for all Keyin 1st two letters to move quickly to name options.
Opens to Plan of Care page. This information will Auto-populate into "Session" page.
172

FIG. 24

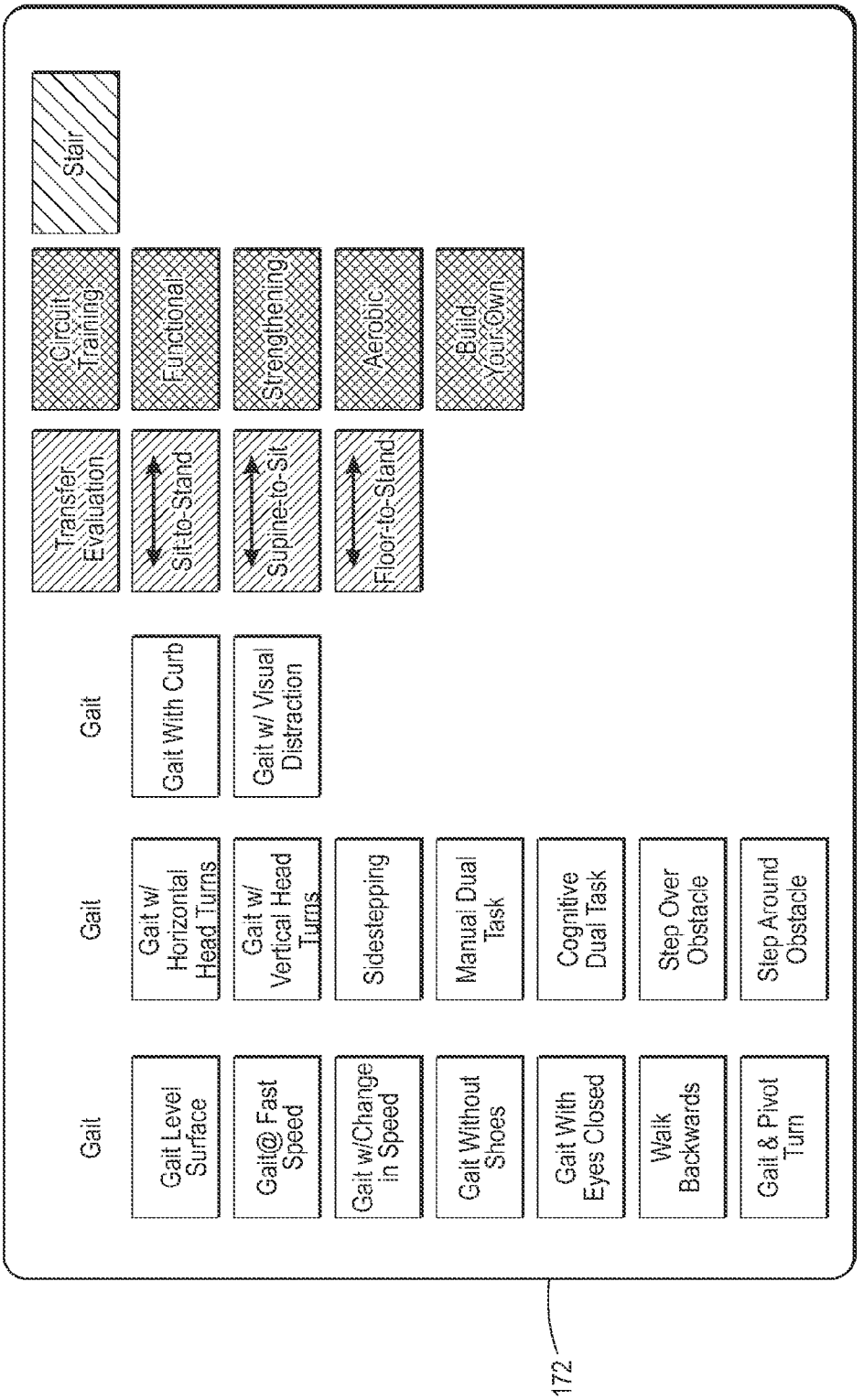
Gait
Gait Level Surface
Gait@ Fast Speed
Gait w/Change in Speed
Gait Without Shoes
Gait With Eyes Closed
Walk Backwards
Gait & Pivot Turn
Gait
Gait w/ Horizontal Head Turns
Gait w/ Vertical Head Turns
Sidestepping
Manual Dual Task
Cognitive Dual Task
Step Over Obstacle
Step Around Obstacle
Gait
Gait With Curb
Gait w/ Visual Distraction
Transfer Evaluation
Sit-to-Stand
Supine-to-Sit
Floor-to-Stand
Circuit Training
Functional
Strengthening
Aerobic
Build Your Own
Stair
172

FIG. 25

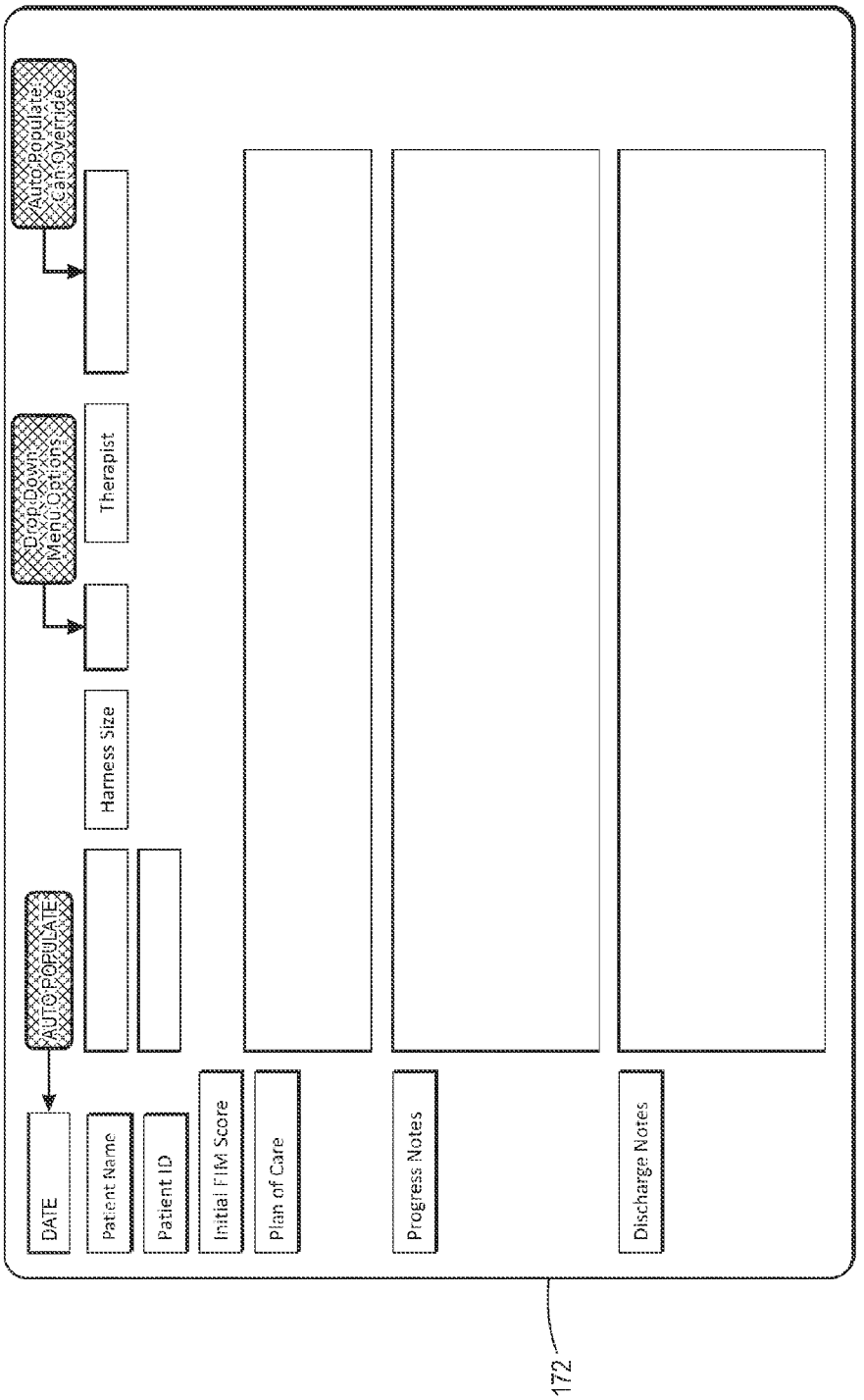
AUTO POPULATE
Drop Down Menu Options
Auto Populate Can Override
DATE
Patient Name
Patient ID
Harness Size
Therapist
Initial FIM Score
Plan of Care
Progress Notes
Discharge Notes
172

FIG. 26

US 2014/0206503 A1 Jul. 24, 2014
1

MEDICAL REHAB LIFT SYSTEM AND METHOD WITH HORIZONTAL AND VERTICAL FORCE SENSING AND MOTION CONTROL

[0001] This application claims priority under 35 U.S.C. §119 from U.S. Provisional Application No. 61/755,007 for a MEDICAL REHAB LIFT SYSTEM AND METHOD WITH HORIZONTAL AND VERTICAL FORCE SENSING AND MOTION CONTROL, filed Jan. 22, 2013 by James Stockmaster et al., which is hereby incorporated by reference in its entirety.

[0002] The system disclosed herein relates to a body-weight support system, and more particularly to an improved support system, and method including exercise modes that are customizable or configurable and dynamic in nature, and which may include loops and a track system, where the system is capable of providing alternative functionality at differing locations, an adjustable and variable supportive force for users based upon, for example, a percentage of sensed body weight. The disclosed system further provides a user-interface that may be employed in a fixed, mobile, wired or wireless manner, and will enable the use of multiple lifts on a single track system.

BACKGROUND AND SUMMARY

[0003] The process of providing rehabilitative services and therapy to individuals with significant walking deficits and other physical impairments presents a challenge to even the most skilled therapists. For example, patients suffering from neurological injuries such as stroke, spinal cord injury, or traumatic brain injury often exhibit an inability to support themselves, poor endurance or walking patterns that are unstable. Such deficiencies make it difficult, at best, for the patient and therapist to engage in particular exercises, therapies, etc. Accordingly, it is increasingly common for such therapies to involve some sort of body-weight support system to reduce the likelihood of falls or other injuries, while enabling increased intensity or duration of the training or therapy.

[0004] Some existing support systems obstruct a therapist's interaction with the patient, by presenting barriers between the patient and the therapist. Other stand-alone support systems require assistance, or the patient, to manage the horizontal movement of the support system, rather than focusing on their own balance and preferred form of the therapy. In other words, the patient may be forced to compensate for the dynamics of the support system. Such a confounding effect could result in the patient's development of abnormal compensatory movements that persist when the patient is removed from the support system.

[0005] Yet a further problem with some systems is that under static unloading, the length of the supporting straps is set to a fixed length, so the subject either bears all of their weight when the straps are slack or no weight when the straps are taught. Static unloading systems are known to produce abnormal ground reaction forces and altered muscle activation pattern. Moreover, static unloading systems may limit the patient's vertical excursions (e.g., up and over steps, stairs and the like) and thereby prevent certain therapies where a large range of motion is required. Another problem observed with systems that are programmed to follow the patient's movement are significant delays in the response of the system (often the result of mechanics of sensors, actuators and system dynamics), where the patient feels that they are exerting greater force than necessary just to overcome the support system—resulting in the patient learning adaptive behaviors that may destabilize impaired patients when they ultimately begin self-supported activities for which they are being trained.

[0006] In light of the current body-weight support systems there is a need for a medical rehab support system and method that overcomes the limitations of the systems characterized above.

[0007] Disclosed in embodiments herein is a body-weight support system having an improved support system and method including exercise modes that are customizable or configurable and dynamic in nature, and which may include loops and a track system, wherein the system is capable of providing alternative functionality at differing locations, an adjustable and variable supportive force for users based upon, for example, a percentage of sensed body weight. The disclosed system further provides a user-interface that may be employed in a fixed, mobile, wired or wireless manner, and the system will allow the use of multiple units on a single, possibly looped, track without collision or interference between adjacent units.

[0008] Further disclosed in embodiments herein is a system for supporting the weight of a person, comprising: a track including an indexed portion thereon (could also be supported by an arm or a gantry with ability to programmatically define a path over which the gantry trolley can move); a movable support operatively attached to the track, the support being movable along a path defined by the track and in a first direction and in a second direction generally opposite to the first direction; a first drive attached to the movable support, said first drive moving the support along the path defined by the track, wherein the first drive is operatively coupled to the indexed portion on the track to reliably control the horizontal position of the support along the track; an actuator attached to the movable support, said actuator including a second drive for driving a rotatable drum, said drum having a first end of a strap (or other flexible, braided member) attached thereto and the strap wound about an outer surface of the drum, with a second end of the strap being coupled to a support harness (or similar supportive/assistive device) attached to support a person; a first sensor for detecting a horizontal force applied to the support via the strap; a second sensor for sensing a vertical force applied to the strap; and a control system configured to receive signals from the first and second sensors and a user interface and to control the movement of at least the first and second drives to facilitate the support and movement of the person, where the control system dynamically adjusts the amount of support provided to the person by altering at least the vertical force applied to the strap via the drum and second motor.

[0009] Also disclosed in embodiments herein is a system for supporting the weight of a person, comprising: a track including a plurality of extruded members joined end-to-end, and a plurality of electrical rails arranged longitudinally along an interior portion of the track for each portion of track, wherein at least one extruded member includes a generally planar upper surface extending in a longitudinal direction, opposing sides extending longitudinally and downward from each side of the upper surface, and where a combination the upper surface and downward-extending sides form the interior portion of the track; each of said opposing sides further including a shoulder extending in an outward direction there-

from; a movable support unit operatively attached to the track, the movable support unit being movable along a path defined by the track in a first direction and in a second direction generally opposite to the first direction; a first drive attached to the movable support unit, said first drive moving the support along the path defined by the track, wherein the first drive is frictionally coupled to a surface of the track to control the horizontal position of the support along the track, wherein said first drive is maintained in frictional contact with the interior portion of the track and where the movable support unit is suspended from rollers resting on each of the shoulders extending from the opposing sides of the track; an actuator attached to the movable support unit, said actuator including a second drive for driving a rotatable drum, said drum having a first end of a strap attached thereto and the strap wound in an overlapping coil fashion about an outer surface of the drum, and a second end of the strap being coupled to a support harness attached to support a person; a first sensor for detecting a horizontal force applied to the movable support unit via the strap, including a strap guide operatively attached to and extending from said movable support unit, said strap guide being attached to a load cell in a manner causing a change in the load cell output when the strap is pulled in a direction forward from or backward from vertical; a second sensor for sensing a vertical force applied to the strap, including at least one pulley between the drum and the person supported by the strap, wherein the pulley is connected on one end of a pivoting arm, said arm being pivotally attached near its midsection to a frame member coupled to the movable support, and where an opposite end of said pivoting arm is operatively associated with a load cell such that the load cell is placed only in compression in response to a load suspended on the strap; and a control system configured to receive signals from the first and second sensors, and a user interface, and to control the movement of at least the first and second drives to facilitate the support during movement of the person, where the control system dynamically adjusts the amount of support provided to the person by moving the moveable support unit horizontally along the track to follow the person, thus minimizing the effect on the person, and by altering the vertical force applied to the person via the strap, the drum and second motor, to be suitable for a given patient.

[0010] Further disclosed in embodiments herein is A method for supporting the weight of a person for purposes of rehabilitation therapy, comprising: providing a track, the track including a plurality of extruded members joined end-to-end, and a plurality of electrical rails arranged longitudinally along an interior portion of the track for each portion of track, wherein at least one extruded member includes a generally planar upper surface extending in a longitudinal direction, opposing sides extending longitudinally and downward from each side of the upper surface, and where a combination the upper surface and downward-extending sides form the interior portion of the track; each of said opposing sides further including a shoulder extending in an outward direction therefrom; operatively attaching a movable support unit to the track, the movable support unit being movable along a path defined by the track in a first direction and in a second direction generally opposite to the first direction; moving the support unit along the path defined by the track using a first drive attached to the movable support unit, wherein the first drive is operatively coupled to a surface of the track to control the horizontal position of the support along the track, and where the movable support unit is suspended from rollers resting on each of the shoulders extending from the opposing sides of the track; controlling the vertical position of the person using an actuator attached to the movable support unit, said actuator including a second drive for driving a rotatable drum, said drum having a first end of a strap attached thereto and the strap wound in an overlapping coil fashion about an outer surface of the drum, and a second end of the strap being coupled to a support harness attached to support the person; detecting a horizontal force applied to the movable support unit via the strap using a first sensor, the first sensor including a strap guide operatively attached to and extending from the movable support unit, the strap guide being attached to a load cell in a manner causing a change in the load cell output when the strap is pulled in a direction forward from or backward from vertical; sensing a vertical force applied to the strap using a second sensor, the second sensor including at least one pulley between the drum and the person supported by the strap, wherein the pulley is connected on one end of a pivoting arm, said arm being pivotally attached near its midsection to a frame member coupled to the movable support, and where an opposite end of said pivoting arm is operatively associated with a load cell such that the load cell is placed only in compression in response to a load suspended on the strap; and providing a control system configured to receive signals from the first and second sensors, and a user interface, and to control the movement of at least the first and second drives to facilitate and support movement of the person, where the control system dynamically adjusts the amount of support provided to the person by moving the moveable support unit horizontally along the track to follow the person.

BRIEF DESCRIPTION OF THE DRAWINGS

[0011] FIG. **1** is a representation of an exemplary rehab support system;

[0012] FIG. **2** is an illustration of a support harness assembly with a person in the harness;

[0013] FIG. **3** is a view of a support on a section of track in accordance with a disclosed embodiment;

[0014] FIG. **4** is a side view of a support on a section of track in accordance with an alternative embodiment;

[0015] FIG. **5** is a cutaway end view along section **5-5** of FIG. **4**;

[0016] FIG. **6** is a cutaway end view along section **6-6** of FIG. **4**;

[0017] FIG. **7** is a perspective view of one of the support suspension assemblies of the embodiment of FIG. **4**;

[0018] FIGS. **8** and **9** are, respectively, perspective and top views of the frictional horizontal drive of the embodiment of FIG. **4**;

[0019] FIG. **10** is a perspective view of the embodiment of FIG. **4**, including components on the interior of the track;

[0020] FIG. **11** is an enlarged view of a portion of the support including components of the vertical lifting system;

[0021] FIG. **12** is a perspective view of the drum used to wind the strap in the system of FIG. **11**;

[0022] FIG. **13** is a perspective view of a strap slack/tension sensing system;

[0023] FIG. **14** is perspective view of a vertical drive, drum and strap sensing system in accordance with the support embodiment of FIG. **4**;

[0024] FIG. **15** is an enlarged view of the strap slack and tension sensing system in accordance with the embodiment of FIG. **4**;

[0025] FIG. **16** is an illustration of the control flow for a disclosed embodiment of the rehab support system;

[0026] FIGS. **17** and **18** are exemplary illustrations of a generally rectangular track system;

[0027] FIGS. **19-21** are illustrative examples of user interface screens for controlling basic operations of the rehab lift system;

[0028] FIGS. **22-23** are illustrative examples of user interface windows for tracking and entering patient-specific information relating to use of a rehab lift system;

[0029] FIG. **24** is an illustrative example of a user interface day list window;

[0030] FIG. **25** is an illustrative example of a user interface plan of care window; and

[0031] FIG. **26** is an illustrative example of a user interface window for review and entry of data for a patient session.

[0032] The various embodiments described herein are not intended to limit the disclosure to those embodiments described. On the contrary, the intent is to cover all alternatives, modifications, and equivalents as may be included within the spirit and scope of the various embodiments and equivalents set forth. For a general understanding, reference is made to the drawings. In the drawings, like references have been used throughout to designate identical or similar elements. It is also noted that the drawings may not have been drawn to scale and that certain regions may have been purposely drawn disproportionately so that the features and aspects could be properly depicted.

DETAILED DESCRIPTION

[0033] Referring to FIG. **1**, depicted therein is a system **100** for supporting the weight of a person or patient **110**. In a general sense, the system comprises a track **120**. Although the following disclosure is largely directed to a track-type system, for example a looped track path as illustrated in FIGS. **17-18** (e.g., no-beginning or end), various aspects and features of the disclosed system and associated methods are contemplated as being supported by an arm (e.g., Jib crane, Gorbel EasyArm™), a cantilevered track section, and perhaps even a gantry with the ability to programmatically define a path over which the gantry trolley can move. In such alternative embodiments, a movable support unit or truck **104** includes a movable support or base **130**, where the support **130** may be fixed to another movable member or may itself be movable relative to a supporting structure. The movable support unit further includes other components such as a horizontal drive **140**, actuator **400**, etc. as will be further described below (e.g., FIGS. **11**, **14**).

[0034] The movable support **130** is, in the embodiment of FIG. **1**, operatively attached to the track **120**, the support being movable along a path defined by the track. Moreover, the generally horizontal movement (H) of the support relative to the track or path along a longitudinal or central axis of the track or track section, and may be in both a first direction and in a second direction generally opposite to the first direction. While illustrated as a horizontal track over which the support **130** travels, also contemplated is a track system where one or more portions or sections of track **120** may be raised or lowered relative to the remainder of the track and/or where a surface or flooring **190** beneath the track is raised or lowered at varying positions, so as to provide or simulate typical scenarios where the person is proceeding up or down an incline, stairs, curbs, etc.

[0035] Continuing with FIG. **1**, a first or horizontal drive **140** is attached to the movable support, and the first drive includes, in one embodiment, a pinion **124** configured to interact with the toothed indexing portion or rack and in response to the rotational motion of the drive **140**, the support is moved along the path defined by the track. As will be appreciated, the horizontal drive is thereby operatively coupled to the indexed portion on the track to reliably control the horizontal position of the support along the track. Using an appropriate drive, for example a servo drive motor provided by B&R (Model #8LS35), it is possible to be relatively precise in both controlling and monitoring the position of the drive and support. More specifically, due to the relationship of the pins or lugs **126** on the pinion **124**, and the direct coupling of such pins to the "teeth" on the rack **122**, any angular rotation of the pinion under the control of the motor will advance or retract the position of the support along the track.

[0036] In contrast, in the alternative embodiment depicted in FIGS. **4-10**, the horizontal drive **140** may be frictionally engaged with a surface (e.g., interior wall) of track **120**. By driving along an interior wall, the system reduces the likelihood of debris interfering with the frictional drive. As will be appreciated, the operation of the horizontal drive **140** is controlled by a AC servo drive **144**, or similar device that is both under programmatic control and further receives signals controlling its operation, for example via a horizontal force sensing assembly **150** and/or via a programmable device such as an industrial PC **170** including a user interface **172** such as that depicted by reference numeral **170** in FIG. **1**. Power is supplied to the servo drive **144** via power supply **146**.

[0037] Although depicted as a floor-mounted device, industrial PC **170** may take one or more forms and may be portable, floor-mounted, and may also include remote-control devices. For example, controller **170** may be a programmable logic controller, available from B&R (Model #PP500). In one embodiment, while there may be a main or centralized control point, that control point may consist of or include a wireless transceiver to communicate with one or more handheld devices (smart phones, tablets, or customizable controllers) that are able to remotely control the operation of the system. Controller **170** may further include memory or storage devices suitable for recording information relating to system usage, patient information, etc. Wireless communications techniques may employ one or more radio frequencies (e.g., Bluetooth), as well as other bandwidth spectrums such as infrared. In one embodiment, the disclosed system may employ an Ethernet or similar communication protocol and technology to implement communications between the various system components. In this manner, a therapist or person attending the patient **110** may be able to control the operation of the device, select, set or modify a program for the patient, etc. as further represented in FIGS. **22-26**. In other words, the therapist may be able to modify or change parameters associated with a patient on the fly using a kiosk, handheld tablet, etc. It is also contemplated that the communications may be of a wired nature between a controller **170** and AC servo drive **144**.

[0038] Although described above in several figures as a rack and pinion type of indexing mechanism, it will also be appreciated that alternative methods and devices may be employed for reliably controlling the horizontal position of the support **130** relative to the track, including the friction drive mentioned and further described below with respect to FIGS. **4-10**.

[0039] In one embodiment, an optical receiver/transmitter pair and sensor may be employed to track the position of the support, where a sensor detects an encoded position along the track. As will be described in more detail below, the ability to reliably control the position of the support enables the system to assure that position relative to stations or regions of the track/path (e.g., FIG. **17**) are accurately determined, and to permit the potential for use of multiple units on a single track—thereby permitting a plurality of patients to use the same track simultaneously where the units can communicate with one another or with a central position control in order to assure that an appropriate spacing is maintained between adjacent units at all times. In an alternative embodiment, the individual support units themselves may include sensors or other control logic that prevents the units from coming into contact with one another while in operation.

[0040] It will be appreciated that although the horizontal position of support **130** is under the control of the horizontal drive, and the support itself otherwise freely slides or rolls along the path defined by the track **120**. The support is connected to roller assembly **128** located on the interior of the track which provides rolling contact with at least the bottom interior of the C-shaped track, and the sides as well. Moreover, the interior of the track may be any conventional track, including a single piece of track or a collection of multiple pieces (e.g., oriented end-to-end). The track may also have electromechanical contacts therein (not shown) that are available to provide electrical power and/or signals to the drives and/or control mechanisms associated with the support. In other words, the roller assembly provides a means for operatively attaching the support to the track, yet minimizing friction using the associated roller assemblies.

[0041] In an alternative configuration such as that depicted in FIGS. **4-10**, the components of the system are modified to provide a track where support is provided on the exterior of the track and the drive and power interfaces are located on the interior surfaces of the track. As illustrated, for example in FIGS. **4-6**, the alternative track **121** comprises an assembly of a plurality of extruded members joined end-to-end. The track cross-section is illustrated in FIGS. **5** and **6** which show, respectively, sectional views **5-5** and **6-6** of FIG. **4**.

[0042] The track includes a generally planar upper web or surface **240**, extending in a longitudinal direction. From the upper web **240**, opposing sides **242** and **244** extend in a downward directed along each side of the upper web.

[0043] The combination the upper surface and downward-extending sides form the interior portion of the track **121**. Each of said opposing sides further includes a shoulder **246**, **248**, respectively, extending in an outward direction therefrom, where the shoulders are oriented perpendicular to the respective side. As further illustrated in the cross-sections, the track includes one or more enclosed channels **243** extending the entire length of each of the downward-extending sides, where the channels reduce the weight and increase the rigidity of the track section. The track sections may further include at least one T-slot **245** suitable for the insertion of a mounting component (e.g., screw or bolt head) therein to facilitate installation and suspension of the track from a ceiling or similar structure. Although not depicted, the track sections are designed to be connected end-to-end using studs or similar splicing members (e.g., a cam-lock splice) that span from the end of one member to the adjoining end of the next track member.

[0044] Multiple electric or power rails **250** are spaced along an interior portion of the track along one of the interior sidewalls for each portion of track over which the movable support unit travels. The rails are mounted to the track using insulated standoffs that are attached via internal T-slots provided in the interior of the track sides. Power is transferred from the rails to the control system and motors via one or more shoes **254** that are slidably engaged with the rails, and associated cabling, to ensure power is available. As illustrated in FIG. **10**, for example, two shoe assemblies **256** and associated support structures are employed in the system in order to assure continuity of power as the movable support unit **104** travels along the track.

[0045] Referring also to FIGS. **6** and **8-10**, the alternative frictional drive system will be described in further detail. Under the operative control of motor **140**, the frictional drive employs a wheel **310** that is maintained in contact with an inner surface of the track, on the side opposite that which contains the power rails. In other words, the drive wheel **310** is biased away from the power rail side and into contact with the opposite side of the track. The biasing force applied to wheel **310** is supplied via springs **320** and idler wheels **322**, where the idler wheels ride against the interior side of the track and force the drive wheel **310** into frictional contact with the opposite side. The drive assembly (FIG. **8**) is allowed to slide or "float" relative to the support **130** as it is operatively coupled to the support **130** via slides **330**. As a result of the disclosed alternative frictional drive mechanism, the first or horizontal drive **140** is slidably connected to the movable support, and the frictional drive mechanism is able to move relative to the support **130**, along a direction that is generally perpendicular to the longitudinal axis of the track.

[0046] Planar support **130** is intended to be self-centering. That is to say that support **130** is maintained in a horizontal position that is generally centered relative to the track by the combination of at least four suspension assemblies **160** that are depicted in detail in FIG. **7**. Each of the assemblies includes a top shoulder wheel **161** and a side shoulder wheel **162**, where the top and side shoulder wheels each maintain contact with respective surfaces of the shoulder (**246** or **248**) extending outward from the track sides. In order to assure that the side shoulder and top shoulder wheels maintain contact and to assure proper tracking of the support, each suspension assembly further includes track idler wheels **164**, along with cammed idler arms **165**, that are pivotally attached to the assembly and operatively connected to one another via a toothed cam **167**. Moreover, arms **165** are biased toward the track side surface that they contact by a spring **166**. In this way the suspension assembly applies an equalizing force to the mounting block **168**, which is in turn affixed to the support plate **130** to cause the plate to self-center during travel and while at rest. Having described the equipment and methodology for driving and controlling the support horizontally, attention is now turned to the balance of the system **100**. Referring also to FIGS.—**3**, **11** and **14**, the system further includes an actuator **400** attached to the movable support, where the actuator includes a second drive **410** and associated transmission **412**, such as a worm-gear transmission, connected to and driving a rotatable drum **420**. One advantage of employing a work gear transmission is the speed reduction of the worm gear is resistant to movement and acts as a braking mechanism should the braking feature of the vertical drive motor **144** fail. The drum **420**, is depicted in perspective view in FIG. **12**. The second or belt drive **410** is an ACOPOS servo

drive produced by B&R in Austria (Model #1045) The drum has a strap **430**, having a first end attached in a receptacle **422** and wound about an outer surface of the drum, with a second end of the strap ending in a coupler **432** to connect to a spreader bar **220** and support harness **222** (or similar supportive/assistive device) attached to support a person **110**. The strap **430**, and as a result the attached spreader bar and/or harness, is raised and lowered under the control of the belt drive **410**. In one embodiment a harness having features such as that disclosed in U.S. Pat. Nos. 4,981,307 and 5,893,367 (both patents hereby incorporated by reference) may be employed with the disclosed system.

[0047] Although an exemplary strap and harness are depicted, it should be appreciated that various alternative harness configurations and support devices may be employed in accordance with the system, and that the intent is not to limit the scope of the disclosed system to the harness depicted. Similarly, the strap **430**, although depicted as a flexible, braided member, may be any elongate member suitable for suspending a person from the system, including rope, cable, etc. having braided, woven, or twisted construction, or possibly even linked or chain-type members. In one embodiment the strap is made from a sublimated polyester, and is intended to provide long life and resistance to stretching. As some therapeutic harnesses are presently adapted for use with strap-type support members, the following disclosure is generally directed to a strap-type member being wound around drum **420**.

[0048] In one embodiment, as depicted in FIGS. **11** and **13** for example, the system includes a first or horizontal load sensor **450** for detecting a horizontal force applied to the support via the strap and a second or vertical load sensor **460** for sensing a vertical force applied to the strap. The load cell for the horizontal sensor **450** may be a bi-directional, in-line sensor suitable for axial force measurement.

[0049] Sensor **450** senses relative position change by a deflection in the downward-extending strap guide. More specifically, as the strap is moved forward or backward in the horizontal direction (H), sensor **450** generates a signal that provides a magnitude of the force applied in the horizontal direction, as well as the direction (e.g., +/−), and outputs the signal to the controller via cable **452**. Thus, the horizontal force detection system detects a horizontal force via the strap using the strap guide operatively attached to and extending from the movable support unit, where the strap guide is operatively connected to a load cell in a manner that results in a change in the load cell output when the strap is pulled in a direction forward from or backward from vertical.

[0050] The strap or vertical force sensor **460**, in order to provide increased resolution, is employed in a compression-only configuration, to sense the force or tension in strap **430**. In the system load sensor is used for sensing a downward vertical force (tensile force) applied to the strap, and the sensor assembly includes at least two pulleys or rollers **476** and **478** in a single or double-reeved pulley system **480**. The pulleys are located between the drum and strap guide **630**. As illustrated in FIGS. **14** and **15**, for example, the pulley is connected on one end of a pivoting arm **640**; there the arm is pivotally attached near its midsection to a frame member **642** coupled to the movable support plate **130**. The opposite end of pivoting arm **640** is operatively associated with a load cell **460**, so that a downward force applied via strap **430**, results in a similar downward force being applied to pulley or roller **478**. In turn, the downward force is transferred via arm **640** to apply a compression force on the load cell **460**. Thus, load cell **460** is placed only in compression in response to a load suspended on the strap.

[0051] In response to signals generated by the load sensors **450** and **460**, a control system, configured to receive signals from the first and second sensors and the user interface **172**, controls the movement of at least the first and second drives to facilitate the support and movement of the person **110**. Moreover, in accordance with one aspect of the disclosed system, the control system dynamically adjusts to provide constant support to the person via the strap and harness by altering at least the vertical force applied to the strap via the drum and second drive **410**.

[0052] With respect to the vertical force, the controller operates, under programmable control to process signals from the vertical load sensor **460** via cable **462**, in combination with prior inputs or pre-set information that sets vertical assistance to be applied to the person via the vertical drive and strap components. For example, the system may have various exercise or therapy modes, whereby the amount of vertical lift supplied is adjusted or modified based upon the particular exercise being conducted. For example, walking over a flat surface the system may control the vertical force to allow the patient to experience about a 90% body weight, whereas on an incline or steps the percentage may be slightly lower, say at about a 70% body weight. To accomplish the control, the system must first determine the patient's body weight—either by sensing it directly in a full support mode or by having the weight (e.g., patient body weight plus spreader bar and harness) entered via the user interface. Once determined, the vertical load sensor (load cell) **460** is then employed in a "float" mode to apply an adjusted force of say 10% (100−90) body weight to the strap and harness, and thereby reduce force experienced by the patient to approximately 90% of the patient's body weight.

[0053] Referring briefly to FIG. **16**, depicted therein is a control diagram indicating the relative relationship amongst system components, including the controller, drive servo motor system and the sensor feedback loop The closed-loop control system is applied in both directions (horizontal and vertical) using a PID control technique; proportional (P), integral (I) and derivative (D) gains. Moreover, an acceleration calculation routine is run prior to engaging a motor so that the motion profile for the system drives are smooth.

[0054] In a manner similar to that of the vertical force sensor, horizontal load sensor **450** similarly senses the horizontal component of the load applied by the user via the strap **430**. In this way, when the patient is engaging in an exercise that is intended to move along the track or path, the system **100**, or more particularly the support **130** and associated components may also index or move along the path in order to provide continued vertical support as the patient advances forward or rearward along the path defined by track **120**, thereby minimizing the effect of the weight of the unit on the person. Another horizontal load sensing alternative contemplated is the use of a trolley suspension mechanism, with a moment arm associated with the suspended trolley having a load cell attached thereto, to sense changes in the force applied through the moment arm.

[0055] In one embodiment, the vertical and horizontal load and position control is accomplished using a programmable controller such as a ACOPOS servo drive, from B&R (e.g., Model #1045). Moreover, the functionality of the controller allows for the control of both the horizontal and vertical

positions simultaneously so as to avoid any delay in the movement and to assure coordination of the control—particularly relative to limits, exercise modes, etc. as will be further described below.

[0056] Referring also to FIGS. **11-15**, the belt or strap **430** is wound on a drum **420** in a yo-yo-like fashion, so that the drum contains a plurality of coiled layers of the strap, and is fed through a reeved pulley system **480** to enable the reliable control of the strap and to facilitate sensing forces exerted on the strap. In view of the strap being wound upon itself, the position sensing mechanism associated with the vertical drive operates under the control of an algorithm that automatically adjusts the motion control to account for the change in radius as the strap is rolled or coiled onto and off drum **420**. Also illustrated in FIGS. **13** and **15** is a belt tension sensing system **610**, where a spring-biased arm **612** or similar contactor is in contact with the strap within a window **620** in guide **630**. The arm pivots relative to the guide whenever the strap is slack, and in response to pivoting, the position is sensed by micro-switch **614** and causes a change in the state of the switch. Thus, when the strap is slack (i.e., not taught), the arm pivots under the spring force and the micro-switch is triggered to cause the system to stop further movement in either the vertical or horizontal mode—other than manually controlled movement.

[0057] Having described the general operation of the vertical and horizontal load control system, it will be appreciated that this system may be employed to enable multiple exercise modes for the patient. For example, the user interface may be employed to select one or more of such exercise modes to be used. It may also be, as illustrated in FIGS. **17** and **18**, that the exercise mode may be controlled via the location of the support relative to the track (e.g., **120**). Referring to FIG. **17**, for example, depicted therein is a track **120** that is laid out in a generally rectangular path or course. Along the path are a series of stations or zones **810***a*-**810***f*, each of which may have one or more exercises to be completed at that station. For example, one station (**810***a*) may be designed for walking on a flat surface and may have a set of parallel bars or railings for patient assistance. Another station (**810***e*) may have an inclined ramp or stairs that the patient traverses, perhaps at a higher level of assistance (i.e., with a lower percentage of body weight being carried, thus a higher level of vertical force applied via the strap). As the support moves from one station to another around the loop as illustrated in FIGS. **17** and **18**, the type and/or amount of assistance and the nature of the control may be pre-programmed according to the particular zone. It will be appreciated that the locations and characteristics of each zone may themselves be programmable via the user interface and that it is anticipated that loops or paths of varying size and configuration may be customized for the needs of particular patients, therapy centers, etc. For example, it may be possible to have a patient's programmatic information stored within a system, and when the patient arrives for therapy, the support system assigned to them is automatically programmed for the same or a slightly modified therapy session from the one that they experienced on their last visit.

[0058] As noted above, the use of multiple system units **100** is contemplated in one embodiment. However, it will also be appreciated that the use of multiple systems may require that such systems be able to avoid collisions. Thus, as illustrated in FIG. **17**, the systems, either through a master controller suitable for monitoring the position of all systems, or through intercommunication between the systems themselves, maintain information related to the relative position of adjacent devices such that they maintain a safe separation distance D between the units. Although not illustrated, in the event of a system employing multiple system units, it is further contemplated that one or more units may be "parked" on a spur or other non-use location when not in use in order to allow unimpeded use of the entire therapy circuit by only a single user.

[0059] Referring to FIGS. **19-21**, depicted therein are exemplary user-interface screens to demonstrate operational features of the disclosed system. The screen depicted on U/I **172** in FIG. **19** is a login screen to access the system control pages (interface), several examples of which are found in FIGS. **20-21**. In FIG. **20**, a control panel screen is illustrated for interface **172**. The screen includes information for both the vertical and horizontal controls (modes), including fields indicating the respective load cell signals, run states and speeds. Also indicated is the control mode, in both cases showing READY, to indicate that the system is ready for use of both the vertical and horizontal controls.

[0060] In the lower part of the screen of FIG. **20**, there are shown a series of buttons permitting the manual control of the vertical and horizontal drives, respectively. Each subsystem may be jogged in either direction and the controls for that subsystem may also be disabled. Various system states, including systematic and/or actuator related state numbers, can be displayed for maintenance and/or troubleshooting. Also, the on/off controls for both horizontal and vertical motion are located this page.

[0061] Also contemplated in accordance with the disclosed embodiments are one or more calibration techniques, whereby the various sensors (e.g., vertical load and horizontal force) are calibrated to assure accurate responsiveness to a patient. As noted herein, the load sensors are employed in different configurations and as a result the calibration techniques are also not the same. For example, the vertical force sensor is employed in a compression-only configuration and thus gives a 1:1 correspondence between the load applied and the output of the load cell. On the other hand, the horizontal load sensor is not a **1**:**1** relationship to the load. However, the horizontal load sensing is slightly less critical to the operation and support of a patient and therefore a lower resolution/responsiveness can be tolerated for the horizontal load sensor.

[0062] Another feature of the disclosed system is what is referred to as virtual limits. Referring also to FIG. **21**, the user interface for the virtual limits is depicted. In one embodiment, there may be several types of limits that are set for a particular system or patient. The limit type may specify a "hard stop" limit, or a soft or transitional limit (where the operation of float mode is adjusted or disabled). For example, in the case of hard stop limits, the limits are set based upon the position—both vertical and/or horizontal. Referring to FIG. **21**, the upper and lower limits are entered into fields **1220** and **1222**, respectively. And, use of the reset buttons adjacent those fields allow the limits to be reset to a pre-determined or default level, or disabled. The left and right limits are similarly entered into fields **1230** and **1232**, respectively, and they may also be reset to a pre-determined or default level or disabled. The interface is responsive to user input via one of many input methods (e.g., touch-screen, mouse, stylus, keyboard, etc.), and the numeric values entered into the limit fields may be done via a numeric keypad, scrollable window or other conventional user-interface means. Furthermore, such limits may be set by physically manipulating the unit

into the position in which the limit is desired to be set, and then recording that location/position. It is further contemplated that the limits themselves may be set for particular zones **810**, and that the values entered may be applicable over the entire system path or only over a portion thereof. It is also the case that the limits may be enabled or disabled via button **1250** on the screen of interface **172** as depicted in FIG. **21**.

[0063] The user interface is also contemplated to facilitate the collection, storage and display of information related to particular patients, including not only settings for the therapeutic exercises as noted above, but additional information as well. For example, the interface may permit the collection and display of biometric information, user performance metrics, etc. The user interface may be enabled using various technologies in addition to or in place of the standing controller. Examples include wired and wireless devices or computing platforms as well as smartphones, tablets or other personal digital assistive devices, docking stations, etc. Moreover, the computing and/or control resources for the rehab lift system may reside in the controller **170**, in the individual system units themselves, or in other locations that are easily accessed and interconnected through one or more wired or wireless connections.

[0064] In one embodiment, in addition to a user interface, the system, particularly the movable support unit **104**, may include one or a plurality of indicators such as light-emitting diodes (LEDs) that are under the control of and operated by the control system. The indicators may be provided on any external surface or housing of the support unit, and would be located in a position (e.g., FIG. **3**, location **912**) where they would be readily visible to a therapist and/or user of the system in order to provide a visual cue while the therapist is watching the patient using the system. The indicators would display an operational status of the system, and may further signal faults or other information based upon the LED color, mode (e.g., on, off, flashing speed) and combination with the other LEDs. As noted above, the user interface may include handheld as well as any permanently located devices such as touch screens and the like, may also be suitable for displaying information from the control system, and receiving information entered by a therapist to control an operation of the system (see e.g., FIGS. **19-21**). As further illustrated by FIGS. **22-26**, the system may include additional computing resources, such as memory or storage devices that enable the storage of data associated not only with system operation, but patient data as well. In one embodiment, the system includes an operation database for storing information relative to the operation of the system. Such a database may also store information relating to use of the system by different patients and their therapists. For example, FIGS. **22-23** are illustrative examples of user interface windows that may be used for tracking and entering patient-specific information relating to use of a rehab lift system. As shown in FIGS. **22** and **23**, various fields are provided to both display and to enter patient information (or have it automatically populated from the database). Certain fields include patient record information for review by the therapist (e.g., date of injury, medical history, prognosis, medications in FIG. **22**) while other fields allow the therapist to input information based upon the patient's use of the system (e.g., Initial FIM score, plan or care, progress notes, and discharge notes as illustrated in FIG. **23**).

[0065] Referring briefly to FIG. **24**, there is shown an illustrative example of a user interface **172** depicting a day list window that represents scheduling or usage of the system. As noted, some of the fields depicted on the interface window **172** of FIG. **24** may auto-populate from information contained in the system database, whereas other fields may be drop-down or similar data entry fields that are available to a therapist or other user of the system. Similarly, FIG. **25** provides an illustrative example of a user interface plan of care window on the user interface **172**. In the plan of care window, a therapist may select from one or more pre-programmed activities for the patient. It will be appreciated that the various activities are subject to programmatic control and the input of certain patient-specific information that may be entered or previously stored in the database. Lastly, FIG. **26** provides an illustrative example of a user interface window for review and entry of data for a patient session. Once again, certain fields may be pre-populated with information based upon the patient ID or similar unique identifier. And, the patient session interface also includes fields for the therapist to enter information. It will be understood that the use and display of information is not limited to the particular interface screens depicted. Moreover, the system may also be able to track a patient's performance in order to measure the number of reps, amount of assistance, number of falls prevented, etc. in order to provide such data in the future, or as a performance measurement over time. The dynamic fall prevention aspects of the disclosed embodiments, particularly when the system controller is operated in what is referred to as a float mode, permits the sensing of dynamic fall events, and while preventing actual falls, the system can also log the occurrences for subsequent review and tracking.

[0066] Also contemplated is the automatic population of certain fields, as well as operational settings for the system, based upon not only the information stored in the database, but the entry of data by the therapist as well. As a result, a user interface available to a therapist or other user of the system may display information selected in the form of a patient record window, a day list window showing use of the system, a plan of care selection window and/or a session data window.

[0067] It should be understood that various changes and modifications to the embodiments described herein will be apparent to those skilled in the art. Such changes and modifications can be made without departing from the spirit and scope of the present disclosure and without diminishing its intended advantages. It is therefore anticipated that all such changes and modifications be covered by the instant application.

What is claimed is:

1. A system for supporting the weight of a person, comprising:

a track;

a movable support unit operatively attached to the track, the movable support unit being movable along a path defined by the track in a first direction and in a second direction generally opposite to the first direction;

a first drive attached to the movable support unit, said first drive moving the support along the path defined by the track, wherein the first drive is frictionally coupled to a surface of the track to control the horizontal position of the support along the track;

an actuator attached to the movable support unit, said actuator including a second drive for driving a rotatable drum, said drum having a first end of a strap attached thereto and the strap wound in an overlapping coil fash-

ion about an outer surface of the drum, and a second end of the strap being coupled to a support harness attached to support a person;

a first sensor for detecting a horizontal force applied to the movable support unit via the strap;

a second sensor for sensing a vertical force applied to the strap; and

a control system configured to receive signals from the first and second sensors, and a user interface, and to control the movement of at least the first and second drives to facilitate the support during movement of the person, where the control system dynamically adjusts the amount of support provided to the person by moving the moveable support unit horizontally along the track to follow the person, thus minimizing the effect on the person, and by altering the vertical force applied to the person via the strap, the drum and second motor, to be suitable for a given patient.

2. The system according to claim **1**, wherein said track includes a plurality of extruded members joined end-to-end, and a plurality of electrical rails along an interior portion of the track for each portion of track over which the movable support unit travels.

3. The system according to claim **2**, wherein said extrusion includes a generally planar upper surface, extending in a longitudinal direction; opposing sides extending longitudinally and downward from each side of the upper surface, wherein a combination the upper surface and downward-extending sides form the interior portion of the track; each of said opposing sides further including a shoulder extending in an outward direction therefrom.

4. The system according to claim **3**, further including at least one enclosed channel extending the entire length of each of the downward-extending sides.

5. The system according to claim **1**, wherein said track includes at least one T-slot suitable for the insertion of a mounting component.

6. The system according to claim **3**, wherein said first drive is maintained in frictional contact with the interior portion of the track and where the movable support unit is suspended from rollers resting on each of the shoulders extending from the opposing sides of the track.

7. The system according to claim **6**, wherein the movable support unit further includes biased idler wheels suitable for restraining the position of the movable support unit along a longitudinal axis of the track.

8. The system according to claim **7**, wherein the first drive is slidably connected to the movable support, along a direction generally perpendicular to the longitudinal axis of the track.

9. The system according to claim **1**, wherein the first sensor for detecting a horizontal force via the strap includes a strap guide operatively attached to and extending from said movable support unit, said strap guide being attached to a load cell in a manner causing a change in the load cell output when the strap is pulled in a direction forward from or backward from a vertical.

10. The system according to claim **9** further including a strap slack sensor, including a micro-switch adjacent a window in the strap guide, said micro-switch comprising a biased contactor in contact with the strap, wherein the contactor causes the micro-switch to change state whenever there is slack in the strap, and where the change in state is sensed by the control system such that an operation of the actuator is at least temporarily disabled upon detecting slack in the strap.

11. The system according to claim **1**, wherein the second sensor for sensing a vertical force applied to the strap includes at least one pulley between the drum and the person supported by the strap, wherein the pulley is connected on one end of a pivoting arm, said arm being pivotably attached near its mid-section to a frame member coupled to the movable support, and where an opposite end of said pivoting arm is operatively associated with a load cell such that the load cell is placed only in compression in response to a load suspended on the strap.

12. The system according to claim **1** further comprising:

a plurality of indicators, operated by the control system, said indicators displaying an operational status of the system; and

a user interface suitable for displaying information from said control system, and receiving information entered by a therapist to control an operation of the system.

13. The system according to claim **11**, wherein the system includes a database for storing information relative to the operation of the system and where the user interface further displays information selected from the group consisting of: a patient record window; a day list window showing use of the system; a plan of care selection window; and a session data window.

14. A system for supporting the weight of a person, comprising:

a track including a plurality of extruded members joined end-to-end, and a plurality of electrical rails arranged longitudinally along an interior portion of the track for each portion of track, wherein at least one extruded member includes a generally planar upper surface extending in a longitudinal direction, opposing sides extending longitudinally and downward from each side of the upper surface, and where a combination the upper surface and downward-extending sides form the interior portion of the track; each of said opposing sides further including a shoulder extending in an outward direction therefrom;

a movable support unit operatively attached to the track, the movable support unit being movable along a path defined by the track in a first direction and in a second direction generally opposite to the first direction;

a first drive attached to the movable support unit, said first drive moving the support along the path defined by the track, wherein the first drive is frictionally coupled to a surface of the track to control the horizontal position of the support along the track, wherein said first drive is maintained in frictional contact with the interior portion of the track and where the movable support unit is suspended from rollers resting on each of the shoulders extending from the opposing sides of the track;

an actuator attached to the movable support unit, said actuator including a second drive for driving a rotatable drum, said drum having a first end of a strap attached thereto and the strap wound in an overlapping coil fashion about an outer surface of the drum, and a second end of the strap being coupled to a support harness attached to support a person;

a first sensor for detecting a horizontal force applied to the movable support unit via the strap, including a strap guide operatively attached to and extending from said movable support unit, said strap guide being attached to

a load cell in a manner causing a change in the load cell output when the strap is pulled in a direction forward from or backward from vertical;

a second sensor for sensing a vertical force applied to the strap, including at least one pulley between the drum and the person supported by the strap, wherein the pulley is connected on one end of a pivoting arm, said arm being pivotally attached near its midsection to a frame member coupled to the movable support, and where an opposite end of said pivoting arm is operatively associated with a load cell such that the load cell is placed only in compression in response to a load suspended on the strap; and

a control system configured to receive signals from the first and second sensors, and a user interface, and to control the movement of at least the first and second drives to facilitate the support during movement of the person, where the control system dynamically adjusts the amount of support provided to the person by moving the moveable support unit horizontally along the track to follow the person, thus minimizing the effect on the person, and by altering the vertical force applied to the person via the strap, the drum and second motor, to be suitable for a given patient.

15. The system according to claim **14** further comprising:

a plurality of indicators, operated by the control system, said indicators displaying an operational status of the system; and

a user interface suitable for displaying information from said control system, and receiving information entered by a therapist to control an operation of the system.

16. The system according to claim **15**, wherein the system includes a database for storing information relative to the operation of the system and where the user interface further displays information selected from the group consisting of: a patient record window; a day list window showing use of the system; a plan of care selection window; and a session data window.

17. A method for supporting the weight of a person for purposes of rehabilitation therapy, comprising:

providing a track, the track including a plurality of extruded members joined end-to-end, and a plurality of electrical rails arranged longitudinally along an interior portion of the track for each portion of track, wherein at least one extruded member includes a generally planar upper surface extending in a longitudinal direction, opposing sides extending longitudinally and downward from each side of the upper surface, and where a combination the upper surface and downward-extending sides form the interior portion of the track; each of said opposing sides further including a shoulder extending in an outward direction therefrom;

operatively attaching a movable support unit to the track, the movable support unit being movable along a path defined by the track in a first direction and in a second direction generally opposite to the first direction;

moving the support unit along the path defined by the track using a first drive attached to the movable support unit, wherein the first drive is operatively coupled to a surface of the track to control the horizontal position of the support along the track, and where the movable support unit is suspended from rollers resting on each of the shoulders extending from the opposing sides of the track;

controlling the vertical position of the person using an actuator attached to the movable support unit, said actuator including a second drive for driving a rotatable drum, said drum having a first end of a strap attached thereto and the strap wound in an overlapping coil fashion about an outer surface of the drum, and a second end of the strap being coupled to a support harness attached to support the person;

detecting a horizontal force applied to the movable support unit via the strap using a first sensor, the first sensor including a strap guide operatively attached to and extending from the movable support unit, the strap guide being attached to a load cell in a manner causing a change in the load cell output when the strap is pulled in a direction forward from or backward from vertical;

sensing a vertical force applied to the strap using a second sensor, the second sensor including at least one pulley between the drum and the person supported by the strap, wherein the pulley is connected on one end of a pivoting arm, said arm being pivotally attached near its midsection to a frame member coupled to the movable support, and where an opposite end of said pivoting arm is operatively associated with a load cell such that the load cell is placed only in compression in response to a load suspended on the strap; and

providing a control system configured to receive signals from the first and second sensors, and a user interface, and to control the movement of at least the first and second drives to facilitate and support movement of the person, where the control system dynamically adjusts the amount of support provided to the person by moving the moveable support unit horizontally along the track to follow the person.

18. The system according to claim **17**, wherein the controller is pre-programmed to control operation of the system in a manner suitable to minimize any effect on the person while permitting movement of the person and dynamically sensing and preventing falls, and thereby altering the vertical force applied to the person via the strap, the drum and the second motor; and where the parameters for operation of the second motor are adjusted for each person.

* * * * *