Department of Veterans Affairs

JRRD Journal of Rehabilitation Research & Development
Volume 48, Number 4, 2011
Pages 287–298

ZeroG: Overground gait and balance training system

Joseph Hidler, PhD;[1–2*] David Brennan, MBE;[2] iian Black, MBE;[2] Diane Nichols, PT;[2–3] Kathy Brady, MSPT;[2–3] Tobias Nef, PhD[4]

[1]Aretech, LLC, Ashburn, VA; [2]Center for Applied Biomechanics and Rehabilitation Research and [3]Physical Therapy Service, National Rehabilitation Hospital, Washington, DC; [4]Gerontechnology and Rehabilitation Group, ARTORG Center for Biomedical and Engineering Research, Universität Bern, Universitätsklinik und Poliklinik für Psychiatrie, Bern, Switzerland

Abstract—A new overground body-weight support system called ZeroG has been developed that allows patients with severe gait impairments to practice gait and balance activities in a safe, controlled manner. The unloading system is capable of providing up to 300 lb of static support and 150 lb of dynamic (or constant force) support using a custom-series elastic actuator. The unloading system is mounted to a driven trolley, which rides along an overhead rail. We evaluated the performance of ZeroG's unloading system, as well as the trolley tracking system, using benchtop and human-subject testing. Average root-mean-square and peak errors in unloading were 2.2 and 7.2 percent, respectively, over the range of forces tested while trolley tracking errors were less than 3 degrees, indicating the system was able to maintain its position above the subject. We believe training with ZeroG will allow patients to practice activities that are critical to achieving functional independence at home and in the community.

Key words: activities of daily living, balance, body-weight support, functional independence, gait, rehabilitation, robotics, spinal cord injury, stroke, walking.

INTRODUCTION

The integration of body-weight support (BWS) systems into gait rehabilitation strategies following stroke, spinal cord injury, and other neurological disorders has continued to expand over the last two decades [1–4]. While the conceptual framework for utilizing BWS is beyond the scope of the present discussion, at its core, unloading the paretic lower limbs allows patients with gait impairments to practice a high number of steps in a safe, controlled manner (Hidler et al. [5]). Varying BWS can also be used to alter the intensity of gait therapy since unloading the patient decreases both muscle demands and, subsequently, muscle forces throughout the lower limbs [6–8]. This can be particularly important during the early stages of neurological injury when patients are often sick and have poor cardiovascular endurance [9].

To date, BWS gait training is often restricted to a treadmill because of the limitations with commercially available overground BWS systems. For example, the Lite-Gait (Mobility Research; Tempe, Arizona) is a gantry that rolls on casters, where the harness donned by the patient is attached to the system through two overhead straps. These straps are tightened similarly to adjusting a standard seat belt so that the slack in the straps is removed when the patient is in a standing position. As the patient walks, the therapist moves the gantry by pulling on external handles, effectively maintaining the system around the patient. The

Abbreviations: ADL = activity of daily living, BWS = body-weight support, COM = center of mass, DC = direct current, PI = proportional-integral, RMS = root-mean-square.

***Address all correspondence to Joseph Hidler, PhD; Aretech, LLC, 21730 Red Rum Drive, Suite 112, Ashburn, VA 20147; 571-292-8889; fax: 571-223-6464.**
Email: hidler@aretechllc.com

DOI:10.1682/JRRD.2010.05.0098

IPR2023-00428 (Aretech LLC v. Bioness Inc.)
Aretech LLC - Exhibit 1021, Page 00001

benefits of devices such as the Lite-Gait are that they are reasonably priced (e.g., <$20,000), patients can begin gait training safely early after injury, and the training session can take place anywhere in the hospital because of the device's mobility. Conversely, limitations with rolling gantry-based systems also exist. First, because the system is quite heavy, it can be destabilizing to a patient pulling it along as they walk. As a result, training with such systems often requires multiple therapists, both to move the gantry and to assist the patient with leg and trunk motion. Motorized gantry-based systems such as the KineAssist (Kinea Design; Evanston, Illinois) attempt to address this issue [10]; however, delays in the responsiveness of such systems often limit the patient's mobility. Second, gantry-based systems have barriers located between the patient's legs and the therapist. A large base is necessary to stabilize the gantry, making it difficult for the therapist to assist the patient as they walk. In addition, because these systems roll on casters, they are limited to smooth, flat surfaces and cannot navigate rough terrain or small stairs.

Perhaps one of the most restrictive features of existing overground systems such as the Lite-Gait and the Solo-Step (Solo-Step; Sioux Falls, South Dakota) is that they only provide static BWS rather than dynamic BWS (see Frey et al. for a description of the various types of unloading systems [11]). The differences between these two types of BWS are important, yet often poorly understood in the clinical community. In static BWS, the length of the support straps are set to some fixed length at the onset of training. If the patient raises their center of mass (COM) above this initial height, the straps go slack. If they lower their COM below this initial height, the straps become taught. Here, the position of the patient's COM is restricted. In static BWS, it is not possible to modulate the amount of BWS as a percentage of the patient's weight. While compression of soft tissues can provide some "give," the amount of unloading is essentially either no BWS or full BWS.

The other BWS mode is dynamic. In dynamic BWS, the amount of vertical unloading rather than the position of the patient's COM is kept constant. In this setting, as the patient moves up and down, they experience a constant amount of vertical support, which can be set as a percentage of the patient's body weight. Dynamic BWS has been shown to produce more natural ground-reaction forces and gait characteristics [11–18] and allows patients to move freely through a wide range of movement profiles (e.g., those needed during gait, sit-to-stand, and getting off the floor). Such activities are not possible with static BWS systems, yet are critical to a patient's ability to practice activities of daily living (ADLs).

In this study, we present a new overground BWS system called ZeroG, which allows patients to practice gait, balance, and postural activities in a safe, controlled manner (**Figure 1**). The system can provide static or dynamic BWS, and because it rides along an overhead track, patients can practice using walking aids and walking on flat surfaces, rough terrain, or stairs. In addition, ZeroG uses an active trolley system that automatically follows the patient as he or she walks. As a result, the patient feels only the vertical unloading forces and very little horizontal forces. In addition to providing a general overview of how ZeroG works, we present experimental test data detailing the performance of the ZeroG's dynamic unloading system as well as ZeroG's trolley tracking system. ZeroG is commercially available from Aretech, LLC (Ashburn, Virginia).

Figure 1.
ZeroG gait and balance training system. System is mounted to overhead track that eliminates barriers between therapist and patient. In addition to overground gait and balance training, patients can also practice walking on a treadmill.

METHODS

Unloading System Mechanics

In order to unload the subject, a harness (Maine Anti-Gravity Systems, Inc; Portland, Maine) is placed around the torso, which is then connected to ZeroG through an 8 mm HMPE (high-modulus polyethylene) fiber and polyester rope (Endura Braid, New England Ropes; Fall River, Massachusetts). The rope moves up and over a pulley mounted on top of a uniaxial force sensor (model SWP-1K, Transducer Techniques; Temecula, California), which allows the controller to monitor the amount of rope tension at all times (**Figure 2**). The rope then runs horizontally to pulley 1, out and around pulley 2, and terminates onto the winch drum. A harmonic drive (model CSG25-80-2U, Harmonic Drive, LLC; Peabody, Massachusetts) is mounted onto the winch motor (model AKM31E, Kollmorgen; Radford, Virginia) resulting in a continuous lift capacity of 340 lb. The winch lifts and lowers the subject and is also tightly integrated into the functionality of the dynamic BWS system. During static BWS, the winch sets the height of the spreader bar, a padded bracket that the straps on the harness connect to.

The amount of tension in the rope is controlled using a custom-series elastic actuator [12–15]. As shown in **Figure 2**, two parallel plates slide along precision rails separated by two heavy-duty die springs. A direct current (DC) brushless motor (model AKM32D, Kollmorgen) is connected to one end of a ballscrew motor (Thomson BSA; Radford, Virginia) that controls the linear position of plate 1. In parallel, the subject controls the motion of plate 2, since the rope attached to their harness passes around pulley 1 before terminating on the winch drum. Rope force is first initiated when the ballscrew motor advances plate 1 toward plate 2, causing the two die springs to compress. Drawing a

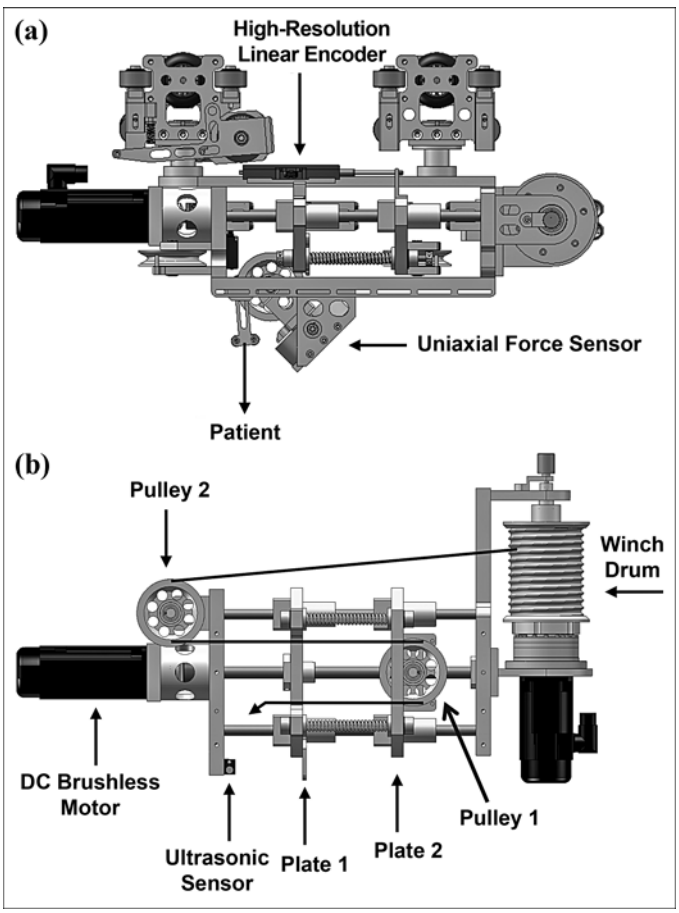

Figure 2.
(a) Side and **(b)** top view of ZeroG illustrating custom-series elastic actuator that controls rope force. Note that top and bottom assemblies have been removed from **(b)** for clarity. DC = direct current.

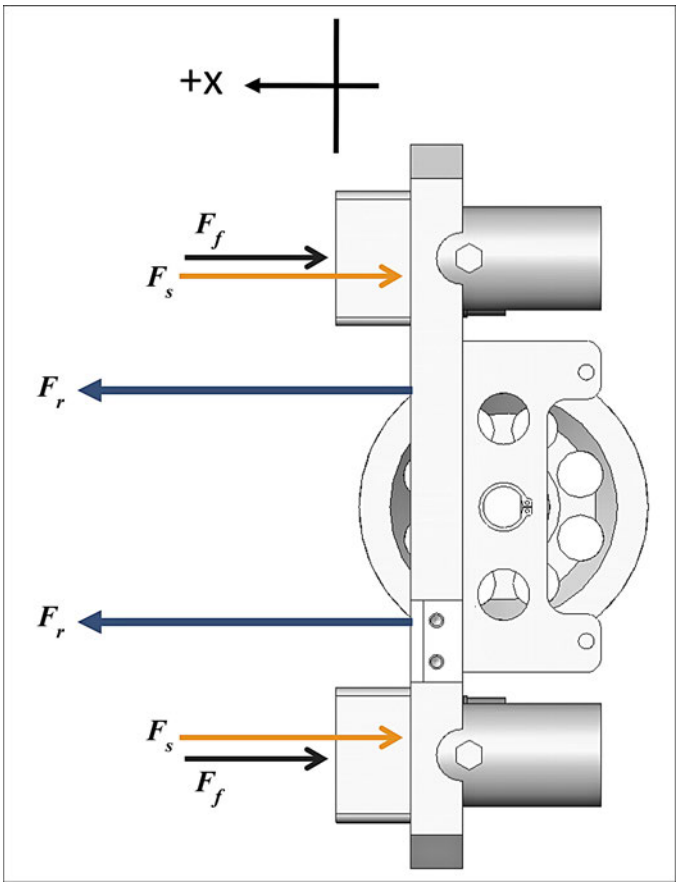

Figure 3.
Free-body diagram on plate 2 connected to patient. Spring forces (F_s) and friction forces (F_f) resist motion because of rope forces (F_r). +X = along positive *x*-axis.

free-body diagram on plate 2 (**Figure 3**), assuming the rotational inertia and friction of the pulley are both negligible, we can derive the rope force (F_r) as

$$\sum F_x = m\ddot{x}$$
$$2F_r - 2F_s - 2F_f = m\ddot{x} \qquad (1)$$
$$F_r = F_s + \frac{m}{2}\ddot{x} + F_f \ ,$$

where F_f = friction forces, F_s = spring forces, F_x = focus on x-axis, m = mass, and $\ddot{x} = x$-axis. Since the forces due to friction in the linear bearings and the inertia of plate 2 are typically small compared with the rope force,

$$F_r \approx F_s = k\Delta x \ , \qquad (2)$$

where k = the stiffness of the die springs and x = the amount of die spring compression. Thus, by maintaining a constant amount of spring compression, the resulting rope force will be held constant. A high-resolution linear encoder (model PED-500, US Digital; Vancouver, Washington) (**Figure 2**) is used to measure the amount of spring compression, which is used in the force controller. The custom-series elastic actuator in ZeroG is capable of generating constant rope tension up to 150 lb.

During normal operation, plates 1 and 2 will move back and forth at a frequency set by the vertical movement of the subject's COM. The full range of plate movement is approximately 4 in., which equates to 8 in. of rope movement. For larger changes in vertical movement, the plates may move all the way to the right or left, making contact with the end plates. To keep the plates centered, an ultrasonic sensor monitors the position of the two plates (**Figure 2**). If plate 1 advances too close to the left end plate, the winch will turn on and let rope out. If plate 2 advances too close to the right end plate, the winch will turn on and pull rope in. This "centering algorithm" allows ZeroG to maintain constant BWS over large ranges of movement, which often occur during tasks such as sit-to-stand maneuvers and getting off the floor.

Custom-Series Elastic Actuator Control System

Figure 4 shows the implementation of the custom-series elastic control system. Here, the desired level of BWS (F_{ref}) is fed forward in the control system, while the difference between the desired BWS (F_{ref}) and actual rope force (F_{act}) measured by the uniaxial force sensor (**Figure 2**) is fed into a proportional-integral (PI) controller and then added to the desired BWS to yield the total force (F_D). The addition of the PI controller serves two purposes. First, the effects of friction and inertia are often ignored in series elastic actuators since they are normally small compared with the output force. For low levels of unloading force during fast movements, friction and inertial effects become more pronounced. Second, **Equation 2** assumes that the stiffness of the die springs is known and remains constant over the compression range necessary to produce the desired unloading force. However, the stiffness of most die springs will change over time and may not obey Hooke's law. Including the PI controller helps overcome these limitations. The

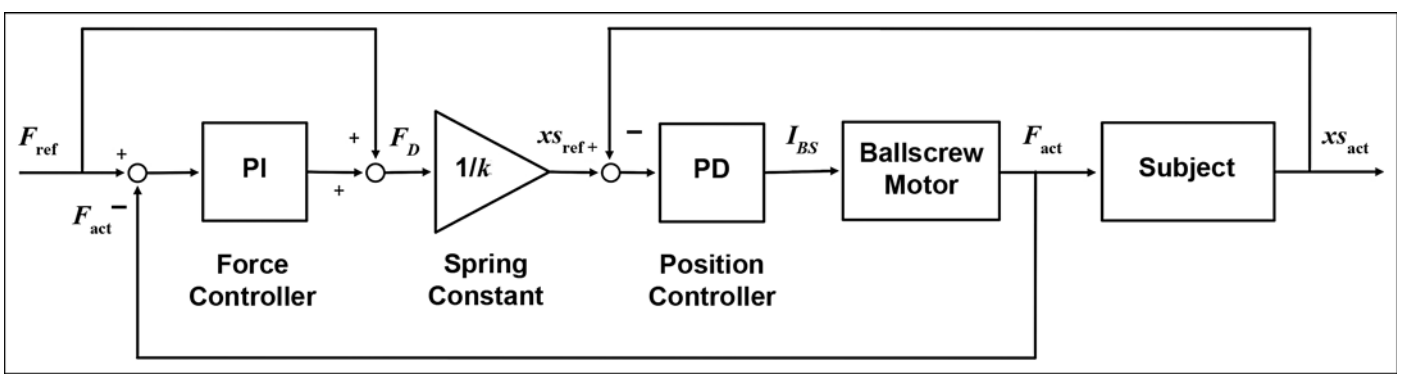

Figure 4.
Custom-series elastic actuator force controller. F_{act} = actual rope force, F_D = total force, F_{ref} = desired body-weight support, I_{BS} = ballscrew motor, k = stiffness of die spring, PD = proportional-derivative, PI = proportional-integral, Xs_{act} = actual spring length, Xs_{ref} = desired spring length.

desired total force is divided by the die spring constant (k) to yield the desired spring length (xs_{ref}). A proportional-derivative controller is then used to establish the command to the ballscrew motor (I_{BS}), which moves plate 1 in **Figure 2** to yield the desired amount of die spring compression (Δx) and, subsequently, actual rope force (F_{act}).

The real-time control system for ZeroG is implemented in MATLAB (The MathWorks; Natick, Massachusetts) and runs on a Pentium Dual-Core (Intel; Santa Clara, California) personal computer. A computer interface written in C# allows the user to control all aspects of ZeroG.

Evaluation of ZeroG Unloading System

To evaluate ZeroG's ability to maintain constant levels of rope force at various movement frequencies and force magnitudes, we connected the rope to a linear actuator positioned below the track. For these tests, we turned off trolley tracking (e.g., trolley position was held stationary on the track) so that only the unloading system was evaluated. We programmed the linear actuator to move up and down through a sinusoidal pattern with a peak-to-peak amplitude of 5 cm. Such a movement trajectory is representative of a person's COM movement while walking at approximately 1.4 m/s [16]. We programmed the linear actuator to move at frequencies of 0, 0.5, 1.0, and 1.5 Hz, while the magnitude of unloading was set to 10, 25, 50, 75, and 100 lb, respectively.

Because trolley movement along the track can introduce errors in the system's ability to maintain constant rope force, we also evaluated the unloading system while subjects walked at their self-selected walking speed at various levels of unloading. Here, we asked subjects to walk at their self-selected walking speeds in ZeroG at unloading forces ranging between approximately 10 to 50 percent of their body weight. Higher levels of unloading made it extremely difficult for subjects to ambulate and often resulted in very little vertical movement of their COM. Therefore we restricted the maximum unloading forces to 50 percent BWS. Subjects walked a minimum of 50 ft at each force level. We also tested ZeroG's ability to maintain constant rope tension over large vertical excursions. For these tests, we asked subjects to drop down to one knee from a standing position, hold their position, and then stand back up. This was repeated a minimum of five times. For these trials, the unloading force was set to 20 to 30 percent of the subject's body weight.

A total of 12 subjects participated in this study (6 male and 6 female; aged 22–55 yr). Inclusion criteria included nondisabled subjects with no gait impairments.

Trolley Tracking System and Control Algorithm

An important component of ZeroG is the actively driven trolley, which helps minimize the horizontal forces the subject feels while walking in the system. One of the trolley assemblies (**Figure 5**, also see **Figure 2** for both trolley assemblies) contains a DC brushless motor (model AKM21C, Kollmorgen) and gear head (model VT006-007, Danaher Motion; Radford, Virginia) that is coupled to a 2.5 in. drive wheel. The DC brushless motor, gear head, and drive wheel are attached to a rocker arm with the pivot point located close to the drive wheel. On the other end of the rocker arm are two die springs that provide an adjustable level of downward force to the rocker arm. As the die springs are compressed, the rocker arm is forced down, which pushes the drive wheel up against the bottom of the I beam. The tension in the springs is set so that no slippage occurs between the drive wheel and the trolley track when the system undergoes simultaneous peak acceleration and rope force.

The trolley tracking algorithm controls the position of the trolley as a function of the position of the subject and the desired task. The angle of the rope is measured with a precision potentiometer (model GL60, Novotechnik; Southboro, Massachusetts) mounted to a small pivoting arm that the rope passes through as it exits the system. For perfect system tracking, the horizontal proportion of the rope force will be zero. If the trolley lies posterior to the subject, the rope will pull the user backward; if the trolley is anterior

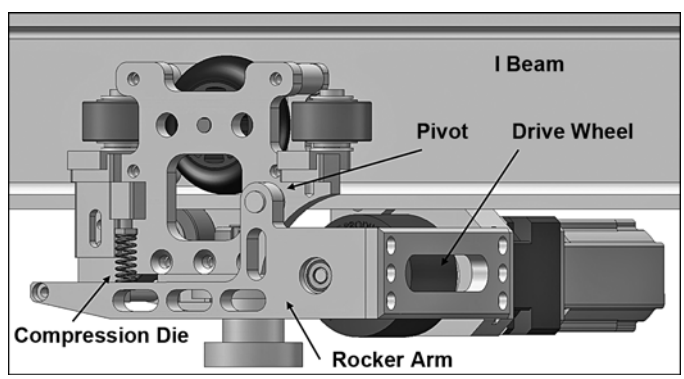

Figure 5.
One ZeroG trolley assembly has drive mechanism that moves system along overhead track. Direct current brushless motor gear head turns drive wheel that presses on bottom of track.

to the subject, the rope will pull them forward. Preliminary experiments with nondisabled subjects suggest that during walking, the subject is highly sensitive to horizontal forces; therefore, controlling the position of ZeroG with respect to the subject is critical. Having large transient errors in tracking when patients walk in ZeroG could potentially be destabilizing, limiting the effectiveness of the therapy.

Figure 6 shows the trolley tracking control algorithm. The control objective is to modulate the drive force (F_T) to keep the actual rope angle (θ_{act}) equal to the reference angle (θ_{ref}). During nonlocomotor postural tasks, θ_{ref} is set to 0°, meaning the system stays directly above the subject. During overground walking, θ_{ref} is set to 3°, meaning the system is slightly in front of the subject. We found this slight bias angle to be the most comfortable to our subjects during the development of the algorithm. A velocity-dependent friction compensation force (F_f) is added to the drive force (F_T) so that the trolley will keep moving at a given velocity during constant-velocity phases where the rope angle is the same as the desired rope. The friction is nonlinear and has been identified on ZeroG [17]. Trolley velocity is determined by differentiating a high-resolution linear encoder (model E5-1024, US Digital) mounted on the axle of one of the trolley wheels. We added the damping component (B), which is a function of both unloading force and trolley velocity, to improve the stability of the tracking algorithm. In addition, the proportional and damping terms are scaled by the height of the subject (e.g., distance between ZeroG and subject) since short rope distances can reduce the system's stability. We determined the height scale factor (h_o) experimentally to ensure trolley stability over the full range of heights (h).

We evaluated the performance of the trolley tracking algorithm by connecting the rope on ZeroG to a 10 ft-long linear slide mechanism mounted to the floor. We programmed the linear slide to move through three piecewise linear-velocity profiles (20, 40, and 60 in./s, or 0.5, 1.0, and 1.5 m/s), repeated 10 times, while BWS was set to 50 lb. These tests allowed us to evaluate the system's performance under controlled movements at various speeds.

RESULTS

General Operation

During clinical use, the therapist first positions ZeroG over the patient by moving the system down the

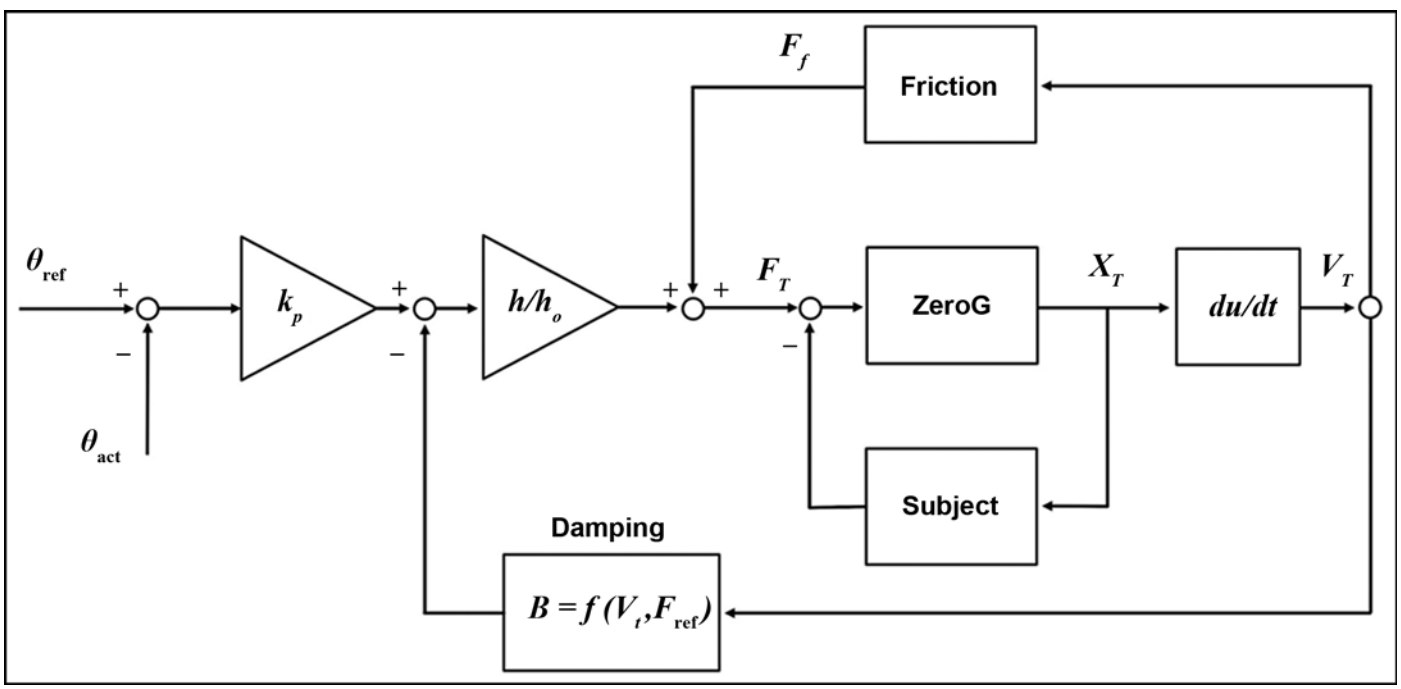

Figure 6.
Trolley tracking control algorithm. θ_{act} = actual rope angle, θ_{ref} = reference angle, B = damping component, F_f = velocity-dependent friction compensation force, F_{ref} = desired body-weight support, F_T = drive force, h = height, h_o = height scale factor.

track. ZeroG moves along the track at a constant velocity, which is measured using a high-resolution linear encoder mounted to the axle on one of the trolley wheels. Once positioned over the patient, the therapist lowers the winch and attaches the patient's harness to a padded bracket (the spreader bar) located at the end of the rope. The spreader bar allows the unloading forces to be distributed to the shoulder straps on the harness. The winch can help lift the patient into a standing position or the spreader bar can be connected to the harness once the patient stands up.

With the patient in a standing position, the therapist selects the amount of dynamic BWS (10–150 lb) and then starts this mode of unloading. Here, the custom-series elastic actuator control algorithm (**Figure 4**) becomes active and begins controlling the rope force. At startup, the trolley tracking algorithm is off, such that the system holds its position on the track. Once the patient is ready to walk, trolley tracking that executes the algorithm shown in **Figure 6** can be enabled. It should be noted that patients can be trained in static BWS if so desired by the therapist.

When dynamic BWS is enabled, the therapist can set the maximum fall distance for the patient. When the patient exceeds this distance, ZeroG will switch from dynamic to static BWS, which prevents them from falling any farther. In addition, if trolley tracking is enabled when a fall is detected, it will automatically switch off, preventing any further trolley movement along the track.

Unloading System Performance

As described in the "Methods" section, we first evaluated ZeroG's ability to maintain constant force under controlled vertical displacements using a linear actuator. **Figure 7** shows the desired and resulting forces for vertical movements of 0, 0.5, 1.0, and 1.5 Hz with desired unloading forces set to 10, 25, 50, 75, and 100 lb. At 0 Hz, ZeroG is able to track the desired forces very closely, with root-mean-square (RMS) errors ranging from 0.13 to 0.35 lb and peak errors ranging from 0.40 to 0.93 lb, respectively, over the full range of test forces. At a movement frequency of 1.5 Hz, the RMS errors range from 0.44 to 1.20 lb while the peak errors range from 1.74 to 4.70 lb, respectively, across

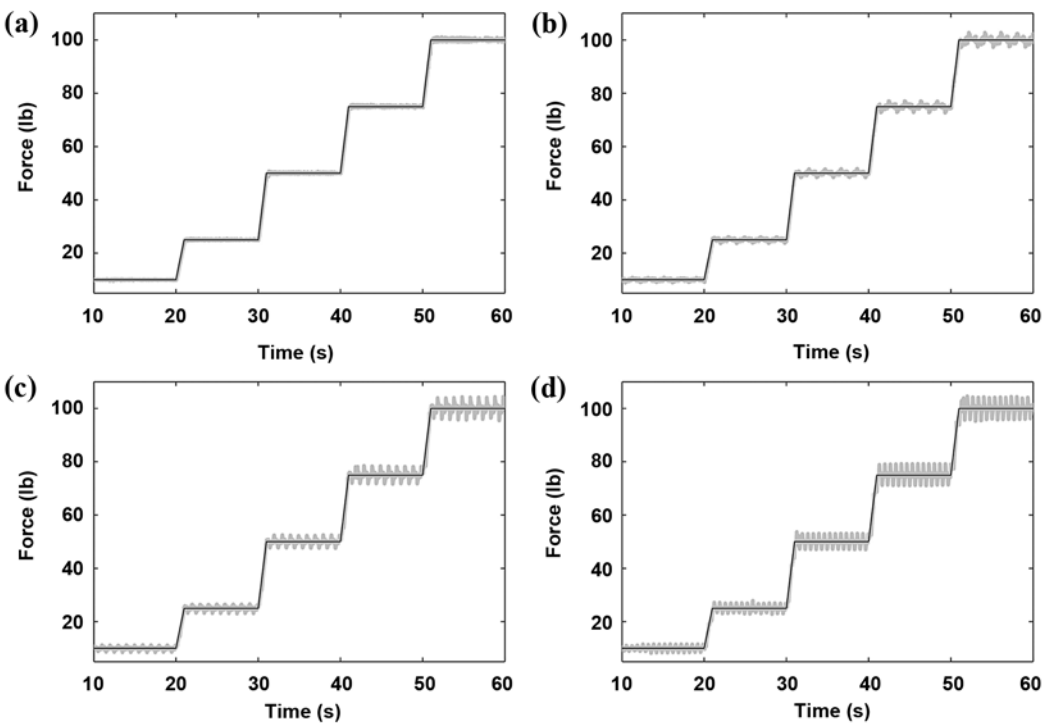

Figure 7.
Performance of ZeroG's unloading system with no trolley movement. Rope was connected to linear actuator that moved up and down in sinusoidal pattern with amplitude 5 cm at movement frequency of **(a)** 0 Hz, **(b)** 0.5 Hz, **(c)** 1.0 Hz, and **(d)** 1.5 Hz. Desired unloading force shown in black ranged from 10 to 100 lb. Actual rope force is shown in gray. See **Table 1** for performance results.

the force range tested. **Table 1** summarizes the RMS and peak errors for each movement frequency and at each level of BWS.

Because trolley movement may introduce errors in unloading forces, we also evaluated ZeroG's unloading system performance during overground walking trials. **Figure 8** shows an example trial where the reference force was set to 50 lb. Here, the subject walked approximately 25 ft, turned around, and returned to the starting position. In this example trial, the unloading force was measured to be 50 ± 3 lb (mean ± peak error). **Table 2** summarizes the results of the experimental walking trials where each value is the average of at least 50 ft of walking. RMS errors ranged from 0.41 to 1.87 lb while the peak error ranged from 1.38 to 6.76 lb, respectively, for the forces tested.

As mentioned in the "Methods" section, a centering algorithm is implemented in the force controller that allows ZeroG to maintain constant levels of force over a large range of motion. **Figure 9** illustrates an example of a subject lowering down to one knee two times, resulting in a vertical displacement of approximately 16 in. Despite the large change in movement, the unloading forces remain within ±1.5 lb of the desired level. **Table 3** summarizes the RMS and peak errors for the large excursion knee bend tests. Each value in the table represents an average of at least 10 knee bends at the corresponding force level. Note that during these experiments, we did not instruct subjects how fast to move up and down but instead instructed them to move at a comfortable speed.

Table 1.
ZeroG's dynamic unloading performance at various movement frequencies and force levels during isolated vertical movements. Peak error listed is nominal force value ± peak error (e.g., 100 ± peak lb).

Frequency (Hz)	Force (lb)	RMS Error (lb)	Peak Error (lb)
0	10	0.13	0.40
	25	0.17	0.43
	50	0.20	0.55
	75	0.25	0.66
	100	0.35	0.93
0.5	10	0.29	1.01
	25	0.37	1.25
	50	0.46	1.60
	75	0.57	2.18
	100	0.70	2.76
1.0	10	0.36	1.42
	25	0.51	1.79
	50	0.71	2.49
	75	0.91	3.43
	100	1.04	4.30
1.5	10	0.44	1.74
	25	0.61	2.49
	50	0.87	3.01
	75	1.10	4.10
	100	1.20	4.70

RMS = root-mean-square.

Trolley Tracking Performance

As described earlier, the trolley on ZeroG attempts to track the patient as they walk in order to minimize the horizontal forces the patient experiences. The upper traces of **Figure 10** show the reference velocity profiles of the linear slide mechanism connected to ZeroG, while the lower half of **Figure 10** shows the resulting actual rope angles (θ_{act}). At the lower movement speed (20 in./s or 0.51 m/s), the maximum error in rope angle reached 0.68°, where the trolley was able to track the slider movement extremely well. At 40 in./s (1.0 m/s), the maximum error in rope angle reached 1.67°, while at 60 in./s (1.52 m/s), the maximum rope angle was 2.85°. In the constant-velocity phases of the movements, the rope angle was often nonzero. This was because of an imperfect friction model and the damping factor (B), which is important for stable operation of the

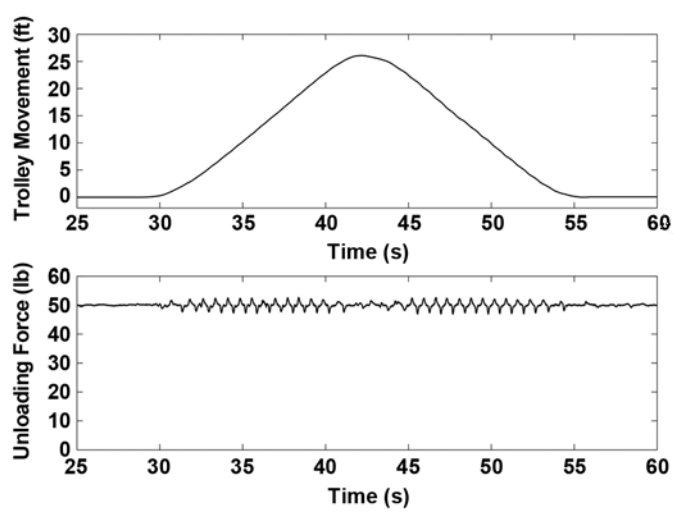

Figure 8.
Example walking trial with subject in ZeroG with level of unloading force set to 50 lb. Subject walked approximately 25 ft at self-selected speed, turned around, and returned to starting position. See **Table 2** for walking test performance results.

Table 2.
Dynamic unloading performance during walking trials in control subjects with no gait impairments.

Force (lb)	RMS Error (lb)	Peak Error (lb)
10	0.41	1.38
15	0.51	1.73
20	0.69	2.15
25	0.62	2.00
30	0.78	2.45
35	0.67	2.30
40	0.84	2.67
45	0.78	2.66
50	0.93	2.99
55	0.88	3.06
60	0.97	3.22
65	1.03	3.14
70	1.16	4.07
80	1.50	5.23
90	1.63	5.53
100	1.73	6.11
110	1.77	6.04
120	1.87	6.76

RMS = root-mean-square.

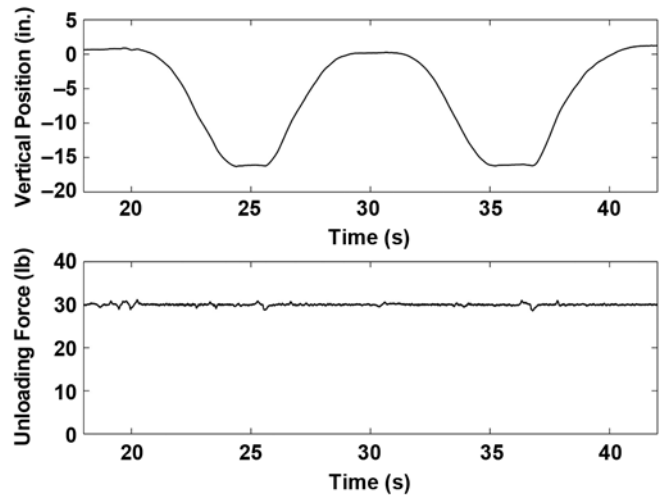

Figure 9.
ZeroG's unloading performance during large vertical excursion. Subject descended approximately 16 in. with level of unloading set to 30 lb. Figure shows that system is able to accurately maintain constant unloading force despite large change in vertical position. See **Table 3** for performance results of large excursion movements.

trolley. Throughout all of the tests, the system demonstrated stable behavior (e.g., did not oscillate) even in the rapid acceleration and deceleration phases of the fastest velocity profiles.

DISCUSSION

We present a new overground BWS system called ZeroG, a system that allows patients to safely practice overground gait and balance activities following neurological and orthopedic injuries. The main motivation for developing ZeroG was to provide patients an environment for safely practicing ADLs in the very acute stages of injury. As outlined in the "Introduction" section, the principle limitation with existing overground gait training technologies is that they do not offer dynamic BWS but instead provide only static BWS. As shown by Frey et al., when patients walk with static BWS, the unloading forces are very inconsistent [11]. For example, at a walking speed of 2 km/h (1.24 mph) and with a desired unloading force of 30 kg (66 lb), the maximum error in unloading was 20.85 kg (46 lb) or nearly 70 percent of the desired force level. When the walking speed increased to 3.2 km/h (2 mph), the maximum error increased to 27.7 kg (61.1 lb) or 93 percent of the desired unloading level. These erratic jerking forces can be destabilizing to patients, particularly if they have significant lower-limb impairment. With ZeroG, the forces are held constant throughout the task, which has been shown to produce much more normal ground reaction forces [18].

In addition to ZeroG's ability to maintain constant BWS over large vertical excursions and at fast walking speeds, the active trolley minimizes the horizontal forces the patient experiences during gait. Commercially available gantry-based overground systems require the therapist to move the device along as their patient walks, since the mass of the system is often too large for the patients to drag along by themselves. The gantry also presents obstacles between the patient and the therapist, which is problematic if the patient requires help advancing their legs or stabilizing their trunk. ZeroG's active trolley automatically moves with the patient, and because the device is mounted to an overhead track, there are no barriers between the therapist and the patient.

ZeroG's series elastic actuator performance tests were conducted under conditions at or above what can be expected during pathological gait. That is, gait speeds typical of patients using ZeroG will be under those of community ambulators or 0.7 m/s [19]. For walking speeds <0.7 m/s, COM movement in the *Z*-direction is typically <3 cm [20] with frequencies between 0.5 and 1.0 Hz. In our

Table 3.
Dynamic unloading performance during large vertical excursion movements.

Force (lb)	RMS Error (lb)	Peak Error (lb)
25	0.16	1.44
30	0.13	1.01
35	0.15	1.14
40	0.29	1.96
50	0.63	2.08
70	0.87	2.14

RMS = root-mean-square.

experiments using a linear actuator, ZeroG had RMS force errors of 1 lb throughout the range of forces tested despite movement amplitudes of 5 cm. For the human walking trials, subjects with no known gait impairments walked at their self-selected speed at forces ≤120 lb. The RMS errors in these trials were always <2 lb while the forces were always within ±7 lb. In addition, we tested trolley tracking performance up to speeds exceeding 1.5 m/s with the performance being the best at speeds typical of those who have gait impairments following neurological injury [21]. Overall, the performance of both the custom-series elastic actuator and trolley tracking are well within our original design goals.

One limitation with the results reported is that we do not show trolley tracking performance during human walking trials but only when tested with the linear slide mechanism (e.g., **Figure 10**). While trolley tracking data has been collected during walking trials, we found that as people walk, their speed changes considerably. As a result, it was not possible to make generalized relationships such as trolley tracking accuracy versus speed. Future studies will attempt to evaluate trolley tracking errors during walking trials by perhaps normalizing speeds and variability.

ZeroG also has significant safety features. The therapist sets a "fall distance" the patient is allowed to descend before ZeroG switches over to static BWS, effectively catching the patient. In addition, the therapist wears a watch-like wireless safety switch. Upon pressing the switch, ZeroG will switch over to static BWS and the trolley will stop and hold its position along the track. These features ensure the highest level of patient safety during therapy sessions.

CONCLUSIONS

The ZeroG system described in this article allows individuals with gait impairment to safely practice overground walking, balance activities, or walking on a treadmill under either static or dynamic BWS. The custom-series elastic actuator used to provide constant BWS was shown to be highly accurate over a wide range of loads and movement frequencies, while the trolley system is capable of tracking an individual's movement even during extremely fast movements. We believe training with ZeroG will allow patients to practice activities that are critical to achieving functional independence at home and in the community.

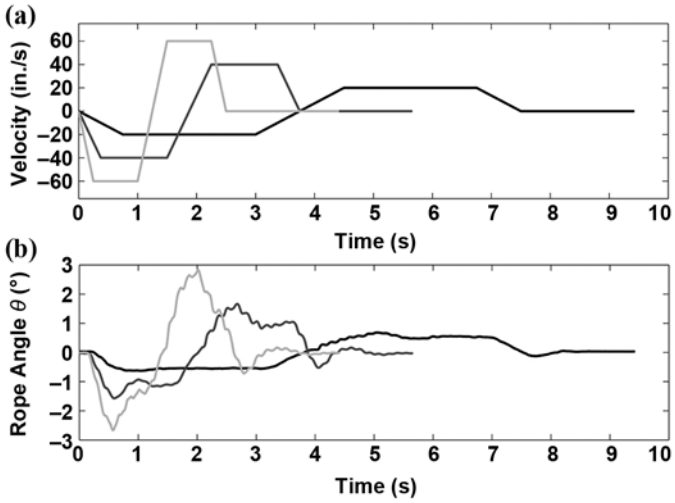

Figure 10.
ZeroG's trolley tracking performance during various piecewise linear movement profiles. **(a)** Desired movement speeds of 20, 40, and 60 in./s (0.5, 1.0, and 1.5 m/s). **(b)** Resulting rope angle averaged over 10 trials. Even at highest speeds, system was able to track desired movement very well, with rope angles <3°.

ACKNOWLEDGMENTS

Author Contributions:
Study execution: J. Hidler, K. Brady, D. Nichols.
Analysis and interpretation of data: J. Hidler, T. Nef.
Drafting of manuscript: J. Hidler, D. Brennan, i. Black, K. Brady, D. Nichols, T. Nef.
Technical support: J. Hidler, D. Brennan, i. Black, T. Nef.
Financial Disclosures: Dr. Hidler is the owner of Aretech, LLC, Ashburn, Virginia, the manufacturer of ZeroG gait and balance training system. The contents of this article are descriptive only and do not make any claims regarding the effectiveness or usefulness of ZeroG. The results only show the technical performance of ZeroG.
Funding/Support: This material was based on work supported by the National Institutes on Disability and Rehabilitation Research (grant H133G050259), the Telemedicine and Advanced Technology Research Center, U.S. Army Medical Research and Materiel Command (grant W81XWH-07-1-0624), and the National Institute of

Child Health & Human Development, National Institutes of Health (grant R43 HD61131-01).

Institutional Review: The purposes and procedures of this study were approved by the institutional review boards of Medstar Research Institute (for the National Rehabilitation Hospital) and the U.S. Army.

Participant Follow-Up: The authors do not plan to inform subjects of the publication of this study because of a lack of contact information.

REFERENCES

1. Dobkin B, Apple D, Barbeau H, Basso M, Behrman A, Deforge D, Ditunno J, Dudley G, Elashoff R, Fugate L, Harkema S, Saulino M, Scott M; Spinal Cord Injury Locomotor Trial Group. Weight-supported treadmill vs overground training for walking after acute incomplete SCI. Neurology. 2006;66(4):484–93. [PMID: 16505299] DOI:10.1212/01.wnl.0000202600.72018.39
2. Dobkin B, Barbeau H, Deforge D, Ditunno J, Elashoff R, Apple D, Basso M, Behrman A, Harkema S, Saulino M, Scott M; Spinal Cord Injury Locomotor Trial Group. The evolution of walking-related outcomes over the first 12 weeks of rehabilitation for incomplete traumatic spinal cord injury: The multicenter randomized Spinal Cord Injury Locomotor Trial. Neurorehabil Neural Repair. 2007;21(1):25–35. [PMID: 17172551] DOI:10.1177/1545968306295556
3. Hicks AL, Ginis KA. Treadmill training after spinal cord injury: It's not just about the walking. J Rehabil Res Dev. 2008;45(2):241–48. [PMID: 18566942] DOI:10.1682/JRRD.2007.02.0022
4. Duncan PW, Sullivan KJ, Behrman AL, Azen SP, Wu SS, Nadeau SE, Dobkin BH, Rose DK, Tilson JK; LEAPS Investigative Team. Protocol for the Locomotor Experience Applied Post-Stroke (LEAPS) trial: A randomized controlled trial. BMC Neurol. 2007;7:39. [PMID: 17996052] DOI:10.1186/1471-2377-7-39
5. Hidler J, Nichols D, Pelliccio M, Brady K. Advances in the understanding and treatment of stroke impairment using robotic devices. Top Stroke Rehabil. 2005;12(2):22–35. [PMID: 15940582] DOI:10.1310/RYT5-62N4-CTVX-8JTE
6. Finch L, Barbeau H, Arsenault B. Influence of body weight support on normal human gait: Development of a gait retraining strategy. Phys Ther. 1991;71(11):842–56. [PMID: 1946621]
7. Colby SM, Kirkendall DT, Bruzga RF. Electromyographic analysis and energy expenditure of harness supported treadmill walking: Implications for knee rehabilitation. Gait Posture. 1999;10(3):200–205. [PMID: 10567751] DOI:10.1016/S0966-6362(99)00035-1
8. Danielsson A, Sunnerhagen KS. Oxygen consumption during treadmill walking with and without body weight support in patients with hemiparesis after stroke and in healthy subjects. Arch Phys Med Rehabil. 2000;81(7):953–57. [PMID: 10896011] DOI:10.1053/apmr.2000.6283
9. Ivey FM, Hafer-Macko CE, Macko RF. Task-oriented exercise training in chronic hemiparetic stroke. J Rehabil Res Dev. 2008;45(2):249–59. [PMID: 18566943] DOI:10.1682/JRRD.2007.02.0035
10. Patton J, Brown DA, Peshkin M, Santos-Munné JJ, Makhlin A, Lewis E, Colgate EJ, Schwandt D. KineAssist: Design and development of a robotic overground gait and balance therapy device. Top Stroke Rehabil. 2008;15(2): 131–39. [PMID: 18430678] DOI:10.1310/tsr1502-131
11. Frey M, Colombo G, Vaglio M, Bucher R, Jorg M, Riener R. A novel mechatronic body weight support system. IEEE Trans Neural Syst Rehabil Eng. 2006;14(3):311–21. [PMID: 17009491] DOI:10.1109/TNSRE.2006.881556
12. Williamson MM. Series elastic actuators [master's thesis]. [Cambridge (MA)]: Massachusetts Institute of Technology; 1995.
13. Pratt GA, Williamson MM. Series elastic actuators. Proceedings of the International Conference on Intelligent Robots and Systems 95: Human Robot Interaction and Cooperative Robots; 1995 Aug 5–9; Pittsburgh, PA. Los Alamitos (CA): IEEE; 1995. p. 399–406.
14. Robinson DW, Pratt JE, Paluska DJ, Pratt GA. Series elastic actuator development for a biomimetic walking robot. Proceedings of the IEEE/ASME International Conference on Advanced Intelligent Mechatronics; 1999 Sep 19–23; Atlanta, GA. Los Alamitos (CA): IEEE; p. 561–68.
15. Veneman JF, Ekkelenkamp R, Kruidhof R, Van der Helm FC, Van der Kooij H. A series elastic- and Bowden-cable-based actuation system for use as torque actuator in exoskeleton-type robots. Int J Robot Res. 2006;25(3):261–81. DOI:10.1177/0278364906063829
16. Gard SA, Miff SC, Kuo AD. Comparison of kinematic and kinetic methods for computing the vertical motion of the body center of mass during walking. Hum Mov Sci. 2004; 22(6):597–610. [PMID: 15063043] DOI:10.1016/j humov.2003.11.002
17. Nef T, Brennan D, Black I, Hidler J. Patient-tracking for an over-ground gait training system. IEEE 11th International Conference on Rehabilitation Robotics; 2009 Jun 23–26; Kyoto, Japan. Los Alamitos (CA): IEEE; 2009. p. 469–73.
18. Gordon KE, Ferris DP, Roberton M, Beres JA, Harkema SJ. The importance of using an appropriate body weight support system in locomotor training. Soc Neurosci. 2000; 26:160.
19. Van de Port IG, Kwakkel G, Lindeman E. Community ambulation in patients with chronic stroke: How is it

related to gait speed? J Rehabil Med. 2008;40(1):23–27. [PMID: 18176733] DOI:10.2340/16501977-0114

20. Orendurff MS, Segal AD, Klute GK, Berge JS, Rohr ES, Kadel NJ. The effect of walking speed on center of mass displacement. J Rehabil Res Dev. 2004;41(6A):829–34. [PMID: 15685471]
21. Hidler J, Nichols D, Pelliccio M, Brady K, Campbell DD, Kahn JH, Hornby TG. Multicenter randomized clinical trial evaluating the effectiveness of the Lokomat in subacute stroke. Neurorehabil Neural Repair. 2009;23(1):5–13. [PMID: 19109447] DOI:10.1177/1545968308326632

Submitted for publication May 19, 2010. Accepted in revised form February 14, 2011.

This article and any supplementary material should be cited as follows:
Hidler J, Brennan D, Black I, Nichols D, Brady K, Nef T. ZeroG: Overground gait and balance training system. J Rehabil Res Dev. 2011;48(4):287–98.
DOI:10.1682/JRRD.2010.05.0098