(19) Europäisches Patentamt
European Patent Office
Office européen des brevets

(11) EP 1 296 595 B1

(12) **EUROPEAN PATENT SPECIFICATION**

(45) Date of publication and mention of the grant of the patent:
15.08.2007 Bulletin 2007/33

(21) Application number: **01950497.6**

(22) Date of filing: **26.06.2001**

(51) Int Cl.:
A61B 5/22 (2006.01)

(86) International application number:
PCT/US2001/020317

(87) International publication number:
WO 2002/003076 (10.01.2002 Gazette 2002/02)

(54) **SYSTEM FOR ASSESSING AND MODIFYING AN INDIVIDUAL'S PHYSIOLOGICAL CONDITION**

SYSTEM ZUR BEWERTUNG UND VERÄNDERUNG DER PHYSIOLOGISCHEN KONDITION EINES INDIVIDIUMS

SYSTEME PERMETTANT D'EVALUER ET DE MODIFIER LA CONDITION PHYSIOLOGIQUE D'UN INDIVIDU

(84) Designated Contracting States:
AT BE CH CY DE DK ES FI FR GB GR IE IT LI LU MC NL PT SE TR

(30) Priority: **30.06.2000 US 609087**

(43) Date of publication of application:
02.04.2003 Bulletin 2003/14

(73) Proprietor: **Lifewaves International, Inc.**
Califon, NJ 07830 (US)

(72) Inventors:
- **DARDIK, Irving, I.**
Califon, NJ 07830 (US)
- **REISMAN, Stanley, S.**
Livingston, NJ 07039 (US)

(74) Representative: **Vossius & Partner**
Siebertstrasse 4
81675 München (DE)

(56) References cited:
EP-A- 0 255 621
EP-A- 0 956 819
US-A- 5 921 891
EP-A- 0 922 434
US-A- 4 281 663

Note: Within nine months from the publication of the mention of the grant of the European patent, any person may give notice to the European Patent Office of opposition to the European patent granted. Notice of opposition shall be filed in a written reasoned statement. It shall not be deemed to have been filed until the opposition fee has been paid. (Art. 99(1) European Patent Convention).

Printed by Jouve, 75001 PARIS (FR)

EP 1 296 595 B1

Description

Background of the Invention

[0001] This invention relates generally to systems for assessing and modifying an individual's physiological condition. More particularly, this invention relates to systems for assessing and modifying an individual's physiological condition by analyzing heart rate data collected while the individual is exercising according to an exercise regimen.

[0002] The human physiological condition is the result of complex interactions between various underlying phenomena that are internal as well as external to the human body. For example, cardiac activity is an accumulation of complex interactions between various internal phenomena such as muscular, neurological, vascular, pulmonary, endocrinal, chemical, and cellular phenomena. Cardiac activity also responds to external behavioral activity, such as physical activity that causes energy expenditure and recovery, and to naturally occurring environmental phenomena, such as day-night cycles, lunar cycles, and weather seasons.

[0003] A perspective view of human physiology enables one to describe physiological functions in terms of wave phenomena made up of a superposition of other underlying wave phenomena. For example, cardiac activity manifests itself through repetitive pulsations of the heart as a heart wave. The heart wave is a result of a superposition of many underlying waves (i.e., cycles) including behavioral waves (e.g., energy expenditure and recovery cycles in response to physical activity), environmental waves (e.g., day-night cycles), and internal waves (e.g., molecular biological, cellular, and chemical cycles).

[0004] Heart rate variability (i.e., the variation in an individual's heart rate) is another manifestation of the superimposed effects of various endogenous and exogenous phenomena on human physiology. Decreased heart rate variability has been associated with abnormal physiological conditions and increased mortality. Treatments which increase heart rate variability in an individual's serve both therapeutic as well as prophylactic purposes. Dardik U.S. Patent Nos.5,007,430, 5,800,737, 5,163,439, and 5, 752, 521, which are hereby incorporated by reference in their entireties, further elaborate on the wave nature of cardiac activity.

[0005] Current methods for analyzing cardiac activity, however, are inadequate because they do not analyze the cyclical properties of heart waves with a view to unraveling details of their superimposed wave structure. In the absence of quantitative information on the cyclical properties of heart waves, it is difficult to provide a complete or accurate assessment of an individual's physiological condition, and individually tailor exercise regimens. For example, most methods of prescribing exercise regimens are often based on general criteria, such as age, rather than an individual's actual physiological condition.

[0006] It would therefore be desirable to have systems and methods that more completely and quantitatively characterize heart waves.

[0007] It would further be desirable to characterize heart waves in a manner that provides an accurate quantitative metric of an individual's physiological condition.

[0008] It would also be desirable to be able to generate individually tailored exercise regimens for modifying an individual's physiological condition, based on a quantitative metric.

Summary and Objects of the Invention

[0009] It is an object of the present invention to provide systems for a detailed characterization of heart waves that enables a relatively complete assessment of an individual's physiological condition.

[0010] It is a further object of the present invention to provide quantitative metrics of an individual's physiological condition, based on detailed characterization of cyclic properties of heart waves.

[0011] It is also an object of the present invention to provide systems for generating individually tailored exercise regimens that are independent of general criteria, such as age, but are based on more experimentally determined metrics.

[0012] It is a still further object of the present invention to provide systems for generating individually tailored exercise regimens based on these metrics, with a goal of increasing heart rate variability.

[0013] These objects are achieved with the features of the claims.

[0014] These and other objects of the invention are accomplished in accordance with the principles of the present invention by providing systems for assessing an individual's physiological condition by extracting cycle parameters from a recorded time trace of heart rate data collected while an individual is exercising according to an exercise regimen. While exercising, the individual's heart wave includes energy expenditure and recovery cycles in response to cycles of physical activity. The cycle parameters containing relevant information can include discrete parameters and shape specific parameters. Discrete parameters include, for example, maximum, minimum, and resting heart rates, as well as upward, downward, and baseline slopes. The shape specific parameters (discussed below) can be used to characterize the shapes of portions of the time trace that are believed to contain physiologically important information. Based on these parameters, an individual's physiological condition can be quantified (e.g., in a heart wave index or a capacity

index), which can incorporate some or all of the relevant physiological information contained in a time trace.

[0015] The quantitative figure of merit can be used to gauge the progress of an individual under an exercise regimen and to design individually tailored exercise regimens for modifying the individual's physiological condition. When used, exercise regimens modify the individual's condition by shaping the heart wave with a goal of increasing the individual's heart rate variability. Individualized heart wave shaping can be achieved in accordance with this invention by application of the principles for therapeutic treatment and bio-rhythmic feed back taught by Dardik, U.S. Patent Nos . 5, 800, 737, 5, 752, 521, 5,163,439, and 5,007,430.

[0016] According to one embodiment of the present invention, an exercise regimen having at least one exercise session that contains one or more exercise cycles is used for assessing an individual's physiological condition. The individual's heart rate is monitored during the exercise session, and a time trace of the heart rate is recorded in an electronic file. Then, the time trace is analyzed to determine one or more cycle parameters, such as a peak heart rate, a minimum heart rate; a resting heart rate, and a base line slope. These parameters can then be used to determine a heart wave index indicative of the individual's physiological condition.

[0017] Additional parameters, such as parabolic coefficients, which characterize the shape of one or more portions of the time trace, can also be obtained. These parameters can also be incorporated into the heart wave index or another figure of merit.

[0018] According to another aspect of this invention, the system allows a quantitative determination of an individual's physiological condition or capability which can be used to prescribe an exercise regimen. As an example, an individual is subject to an exercise test to determine an initial physiological capability. During the test the individual's heart rate is monitored and preferably stored in the form of an electronic file. The test typically includes at least one, and preferably several exercise cycles, including a maximum effort cycle in which the individual attempts to exercise to the individual's maximum capability. Cycle parameters are then obtained by analyzing the heart rate data. The cycle parameters (such as those that characterize the maximum effort cycle) can be incorporated into a figure of merit. Then, an individualized exercise regimen can be generated using an algorithm that relates the figure of merit, or the cycle parameters directly, to exercise regimens.

[0019] In accordance with the principles of the present invention, a system for assessing an individual's physiological condition or capability includes at least an electronic monitor, a recorder, and an analyzer. The monitor monitors the individual's heart rate. The recorder records a time trace of the individual heart rate in an electronic file. The analyzer analyzes the electronic file, using one or more routines (i.e., procedures, programs, or algorithms) to, for example, determine at least one cycle parameter, such as a peak heart rate, a maximum heart rate, a minimum heart rate, an upward slope, a downward slope, and a base line slope. The analyzer can derive shape parameters by fitting one or more parabolas or other mathematical models to portions of the time trace, and can determine a figure of merit based on the determined cycle parameters.

[0020] According to another aspect of this invention, electronic networks, such as the Internet, can be used to receive data and provide information to the individual remotely.

Brief Description of the Drawings and the Appendix

[0021] The above and other objects and advantages of the present invention will be apparent upon consideration of the following detailed description, taken in conjunction with the accompanying drawings, in which like reference characters refer to like parts throughout, and in which:

FIG. 1 is a schematic block diagram of an illustrative system constructed in accordance with the present invention;
FIG. 2 is an illustrative exercise regimen that can be generated and used in accordance with the present invention;
FIG. 3 is an illustrative time trace of heart rate data collected over an exercise session, in accordance with the present invention;
FIG. 3a is an illustrative time trace of heart rate data collected over an exercise cycle, in accordance with the present invention;
FIG. 4 is an illustrative top portion of a cycle in a time trace including an illustrative theoretical parabola that has been fit thereto in accordance with the present invention;
FIG. 5 shows two illustrative top portions of a time trace, each corresponding to an abnormal physiological condition, including two illustrative theoretical parabolas that have been fit thereto, in accordance with present invention;
FIGS. 6a, 6b and 6c show three illustrative time traces having cumulative rest portions with varying degrees of parabolicity corresponding to good, moderate and poor physiological conditions, respectively;
FIG. 7 is an illustrative look-up table that can be used in accordance with this invention; and
FIG. 8 is an illustrative exercise regimen that has been generated in accordance with the present invention;
FIG. 9 is a flow chart of a process used to extract cycle parameters from a time trace, in accordance with the present invention;

FIG. 10 is a flow chart of a process used to extract shape parameters from top portions of a time trace, in accordance with the present invention;

FIG. 11 is a flow chart of a process used to extract shape parameters from rest portions of a time trace, in accordance with the present invention; and

Appendix A contains actual exercise regimens appropriate for individuals with nominal capacity indices ranging from 120 to 180 units, in accordance with this invention.

Detailed Description of the Invention

[0022] In order that the invention herein described can be fully understood, the following detailed description is set forth.

[0023] FIG. 1 shows illustrative systems for assessing an individual's physiological condition during performance of an exercise regimen. Individual 10 is shown exercising on exerciser 20. Exerciser 20, for example, can be a treadmill machine, a trampoline, a stationary bicycle, or any other suitable exercising apparatus. Exerciser 20, however, is optional because exercise can be done without the aid of an exercise apparatus (e.g., running, jogging, jumping, walking, moving arms and shoulders, or swinging legs). Electronic monitor 30 monitors the heart rate of individual 10.

[0024] Monitor 30 can be any commercially available unit that measures the heart rate and transmits heart rate data to recorder 40 through link 50. Link 50 can be, for example, a magnetic coupling, a wireless transmission system, or any other electronic or electromagnetic network. Monitor 30 can be connected through link 50 to user interface 60. Interface 60 can provide to users visual, auditory, or tactile information regarding the heart rate or any other type of data. Recorder 40 can be, for example, a printer, a chart recorder, or other device (or combination of devices) that can record the time trace in an electronic file 70.

[0025] Monitor 30, recorder 40, link 50, and interface 60 can be obtained commercially as an integrated heart monitoring and recording unit (such as Model Polar M52 or Model Polar NV sold under the trademark POLAR™, by Polar Electro Inc., of Woodbury, New York). Link 80 connects recorder 40 to analyzer 90, and can be local or remote to exerciser 20. According to one embodiment, and as shown in FIG. 1, link 80 can include watch reading interface 81 (such as "Polar Advantage Interface System" Model 900622K sold under the under the trademark POLAR™, also by Polar Electro Inc.), personal computer 82, and Internet link 83. It will be appreciated, however, that link 80 can be any electronic network that couples recorder 40 to analyzer 90 for data communication.

[0026] Analyzer 90 can include one or more electronic computing devices, preferably programmable computing devices (such as Model HP-VEE sold by Hewlett Packard Company, of Palo Alto, California). It will be appreciated that analysis could, in some cases, involve manual computation or review. Analyzer 90 analyzes electronic file 70, which contains at least one time trace of the heart rate, to determine at least one exercise cycle parameter (e.g., a maximum heart rate). Based on that parameter, analyzer 90 can calculate a heart wave index indicative of the individual's physiological condition.

[0027] FIG. 2 shows illustrative exercise regimen 200, which includes exercise session 201. FIG. 3 shows corresponding illustrative time trace 300 of an individual's heart rate, when exercising according to session 201. Exercise session 201 includes five successive exercise cycles 210-214 of increasing difficulty with each of cycles 210-214 associated with generally increasing target heart rates 215-219. It will be appreciated that an exercise session according to this invention could include more or less than five cycles and that the target heart rates need not increase monotonically.

[0028] In each of exercise cycles 210-214, the individual is expected to commence physical activity and continue the activity over first time period 222 in an attempt to raise the heart rate to one of respective target heart rates 215-219. Period 222 can be fixed or variable. Preferably, period 222 is variable but has an upper time limit. When period 222 is variable and has an upper time limit (e.g., variable cycle 214), the individual exercises only until either the target heart rate is reached or the upper time limit is reached. Preferably, the upper time limit is about one minute. However, when period 222 is fixed, the individual exercises for a fixed amount of time even if the individual's heart rate goes over or stays under the target heart rate. Period 222 when fixed is preferably between about 30 seconds and about 90 seconds, and more preferably about one minute (e.g., cycles 210-213).

[0029] One type of variable cycle is a spike cycle. In spike cycle 214 (represented as "S"), an individual exercises as vigorously as possible to reach target heart rate 219 in as short a time as possible. Thus, the actual time period depends on the condition of the individual.

[0030] In each cycle 210-214, after initial period 222, the individual relaxes during time period 223 by gradually diminishing, or preferably, by abruptly ceasing physical activity. Period 223 can also be fixed or variable. Preferably, period 223 is variable and ends when the heart rate substantially stabilizes (i.e., levels off). A heart rate can be considered "stabilized" when the heart rate changes less than a certain amount over a pre-determined period of time. For example, a heart rate can be considered to be stabilized when the heart rate changes less than about 3 beats/min. over an interval, such as a one minute interval.

[0031] Exercise session 201 can include intervening rest periods 224 between successive exercise cycles 210-214. Additional intervening rest period 224 can also be inserted before post-exercise recovery period 225. Rest periods 221,

224, and 225 can have fixed durations or can be determined by the individual's performance by the amount of time required for the heart rate to substantially stabilize.

[0032] A time trace can contain heart rate data collected over any time period ranging, for example, from a few seconds to several days. Thus a time trace can include data collected over a single or multiple exercise cycles, sessions, or regimens. FIG. 3 shows illustrative time trace 300 of an individual's heart rate during exercise session 201. Trace 300 includes pre-exercise portion 310, which represents the heart rate during time period 221. During period 221, the individual can stay still, acclimatize to exerciser 20 and surroundings, and allow the heart rate to stabilize over several minutes before commencing an exercise cycle. Portion 310 is believed to contain information on the individual's resting heart rate and can serve as a reference or base line heart rate from which to assess changes in the individual's physiological condition, for example, due to exercise.

[0033] Each of portions 320 represents a rising heart rate during each of time periods 222 (FIG. 2). It is believed that each of portions 320 contains physiological information on the individual's ability to sustain increasing stress.

[0034] Each of portions 330 represents a portion of an exercise cycle in which the heart rate of the individual falls. The heart rate often exhibits a natural overshoot phenomena at the end of portion 330, typically falling below an initial base line heart rate (prior to cycles 210-214). After overshooting, the heart rate normally recovers to a new base line heart rate. Portion 330 is believed to contain physiological information on the individual's short term ability to recover from stress.

[0035] Each of top portions 325 represents the heart rate as it transitions between periods 222 and 224, which roughly correspond to time trace portions 320 and 330. In each of cycles 210-214, the individual attains a peak (i.e., maximum) heart rate during top portion 325. Peak heart rates have been found to be a significant measure of an individual's physiological condition.

[0036] Each of portions 340 represents the heart rate during stabilizing periods 224 which allow the individual's heart rate to stabilize between cycles 210-214. Portions 340 are believed to contain physiological information on shifts in the resting heart rates to new base line levels in response to exercise cycles 210-214.

[0037] Portion 350 represents the heart rate during post-exercise recovery period 225. Portion 350 is believed to contain physiological information on an individual's ability to recover from the cumulative effects of exercise cycles 210-214, including any shift in base line heart rates.

[0038] An assessment of an individual's physiological condition can be quantified in a figure of merit (e.g., a heart wave index). This figure can incorporate some or all of the relevant physiological information contained in a time trace of the heart rate, including any of the cycle parameters discussed herein. A heart wave index, for example, is a single metric that can be used to summarize an assessment of the physiological condition. The heart wave index can also be regularly determined and used to gauge the progress of an individual under an exercise regimen. Use of one or more quantitative figures of merit enables an accurate determination of causes and effects of changes that occur in an individual's physiological condition based on an exercise routine. As explained more fully below, exercise regimens for an individual can be designed to cause specific changes in an individual's heart wave index.

[0039] Information contained in a time trace can be characterized by cycle parameters (such as peak heart rates, minimum heart rates, upward slopes and downward slopes), that are achieved during one or more exercise cycles in an exercise regimen. Other cycle parameters such as baseline slopes and resting heart rates can be used to characterize pre-exercise, intervening, and post-exercise rest periods.

[0040] Information contained in a time trace can be further characterized by shape specific cycle parameters that describe the shapes of portions of the time trace. These shape parameters can be incorporated into the heart wave index. For example, cycle parameters that describe the parabolicity of a top portion or a rest portion can be used to determine a heart wave index. Moreover, multiple shape parameters can be used in combination. For example, parabolic coefficients can be used in combination of baseline slopes.

[0041] A time trace can be analyzed to determine a maximum heart rate achieved by the individual in the course of an exercise session. According to one embodiment of the present invention this maximum rate serves as the heart wave index that is used to determine the target heart rates in an individually tailored exercise regimen.

[0042] A time trace can be further analyzed to determine other cycle parameters, such as an upward slope S_{up}, a downward slope S_{down}, a peak heart rate R_{peak}, and a minimum heart rate R_{min}. FIG. 3a shows an illustrative cycle 214 of time trace 300. Starting heart rate R_0 is determined by finding the heart rate at time t_0, at or about the start of period 222. Peak heart rate R_{peak} and corresponding time t_5 are determined by finding the highest heart rate datum within top portion 325. Time t_5 is often located at or about the end of period 222 by which time the target heart rate has been reached. Minimum heart rate R_{min} and corresponding time t_6, are determined by finding the lowest heart rate datum in portion 330. Time t_6 is often located at or about the end of period 223 by which time the heart rate has stabilized.

[0043] The upward slope can be calculated as a derivative, for example, using the change in the heart rate from R_0 to R_{peak} over all of portion 320 (corresponding to time period 222), substantially according to:

$$S_{up} = (Rpeak-R_0) \ / \ (t_5-t_0)$$

[0044] The downward slope can also be calculated as a derivative, for example, using the change in the heart rate from R_{peak} to R_{min}, substantially according to:

$$S_{down} = (Rpeak-R_{min}) \ / \ (t_6-t_5)$$

[0045] It will be appreciated that other formulations of the upward and downward slope can be used in accordance with the present invention. For example, an upward slope can be calculated by first identifying a segment of portion 320 which is substantially linear. Such a substantially linear portion is shown in FIG. 3a as the segment between heart rates R_1 and R_2, corresponding to times t_1 and t_2, respectively. Upward slope S_{up} can be calculated according to:

$$S_{up} = (R_2-R_1) \ / \ (t_2-t_1)$$

[0046] Similarly, downward slope S_{down} can be calculated by identifying a segment of portion 330 which is substantially linear, such as the segment between heart rates R_4 and R_5 corresponding to times t_3 and t_4, respectively. Downward slope S_{down} can be calculated according to:

$$S_{down} = (R_4-R_5) \ / \ (t_4-t_3)$$

[0047] A heart wave index can be determined using one or more of these cycle parameters. For example, heart wave index HWI can be defined as a weighted sum of at least two of upward slope S_{up}, downward slope R_{down}, peak heart rate R_{peak}, and minimum heart rate R_{min}, for example, according to:

$$HWI = a \ R_{peak} + b \ S_{up} + c \ S_{down} + d \ R_{min}$$

where a, b, c and d are weight factors that can be positive, zero, or negative numbers.

[0048] For example, a heart wave index can be a straight linear sum of upward slope S_{up}, downward slope S_{down}, and peak heart rate R_{peak}. In this case, weight factors a, b, and c set are equal to 1, and factor d is equal to zero:

$$HWI = R_{peak} + S_{up} + S_{down}$$

[0049] It will be appreciated that any convenient formulation could be used, depending on the nature or properties of the particular quantities being measured.

[0050] A heart wave index could also incorporate one or more other cycle parameters that characterize pre-exercise, intervening and post-exercise rest portions determined from the time trace. For example, resting heart rate R_{rest} can be used to characterize any of rest portions 310, 340, and 350. Resting heart rate R_{rest} can be determined, for example, by averaging the heart rate after it has substantially stabilized. Further, for example, a base line slope S_{base} can be used to characterize any one or any combination of rest portions. (A combination of rest portions can, for example, consist of all of portions 310, 340, and 350). Base line slope S_{base} can be calculated by determining the change in the heart rate during one or more rest portions, in a manner analogous to the determination of upward and downward slopes described above.

[0051] Thus, the heart wave index can be any function of cycle parameters:

$$HWI = function(cycle\ parameters).$$

A heart wave index can be equal, for example, to the difference in the resting heart rates determined from portions 310 and 350.

[0052] FIG. 9 shows a flow diagram of process 900 of one embodiment used to analyze a time trace contained in an electronic file. Process 900 begins at step 910 by selecting or receiving an electronic file for analysis. Next, in step 920, any file headers attached to the electronic file can be stripped away. In step 930, any header information can be stored in a database. Steps 920 and 930 are optional, but can be useful when the file is received in the form of an e-mail, for example.

[0053] In step 950, the time trace is further analyzed by determining various cycle parameters, such as baseline slope, upward and downward slopes, and/or maxima and minima for each cycle. In addition to determining cycle parameters, a heart wave index can also be calculated in step 950. In step 960, analysis results are optionally stored in a data base.

[0054] Shape parameters can also be derived from the time trace, for example, by fitting one or more top portions 325, or through all of rest portions 310, 340 and 350 with a theoretical parabola,

$$y = Ax^2 + Bx + C.$$

Regression analysis techniques can be used to fit the parabola to obtain coefficients A, B, and C. Any suitable statistical test (e.g., chi-square) can be used to determine the quality of the fit. At least one goodness of fit parameter (e.g., coefficient of correlation R, or coefficient of determination R^2) that characterizes the quality of the fit can also be calculated.

[0055] FIG. 4 illustrates how a parabola can be fit to a top portion, such as top portion 325, to obtain one or more shape parameters. Time trace portion 400 represents a top portion of an exercise cycle. Theoretical parabola 410 represents a best fit generated, for example, by regression analysis. The heart wave index can then be determined using any of the cycle parameters and one or more shape parameters, such as the parabolic coefficients and one or more goodness of fit parameters. The heart wave index can itself be equal to a goodness of fit parameter.

[0056] FIG. 10 shows a flow diagram of process 1000 of one embodiment used to fit a parabola to top portions contained in an electronic file. In step 1001, an electronic file to be analyzed is selected or received. Next, any file headers attached to the electronic file can be stripped. In step 1020, a maximum heart rate for each relevant cycle is determined, which could involve locating the top portion of each cycle. In step 1030, the top portions are fit to theoretical shapes (e.g., parabolas) using, for example, regression analysis. Parabolic coefficients are obtained and at least one goodness of fit parameter is preferably calculated for each fit. In step 1040, analysis results can optionally be stored in a data base.

[0057] Similarly, FIG. 11 shows a flow diagram of process 1100 of one embodiment used to fit a parabola to resting portions in a time trace. In step 1101, an electronic file to be analyzed is selected or received. In step 1110, any file headers attached to the electronic file can be stripped away and optionally stored. In step 1120, a minimum heart rate for each cycle is determined. In step 1130, a recovery baseline is chosen. This can involve determining a portion of the time trace in which the heart rate is stabilized after recovering from a minimum determined in step 1120. In this manner, rest portions 340 corresponding to each cycle can be identified. In step 1140, regression analysis or any other type of comparable analysis routines are used to fit a parabola to each rest portion. For each fit, parabolic coefficients and/or at least one goodness of fit parameters can be obtained. In step 1150, analysis results can be optionally stored in a data base.

[0058] As explained above, the shapes of the top portions and the resting portions are believed to contain information on the physiological condition of the individual. In particular, it has been discovered that abnormal physiological conditions are often associated with non-parabolic shapes. FIG. 5 shows a heart rate trace that includes two illustrative top portions 501 and 502. These portions correspond to abnormal physiological conditions because their shapes deviate strongly from symmetric parabolas 503 and 504, respectively.

[0059] FIGS. 6a, 6b, and 6c show actual measured time traces 601, 602, and 603, of heart rate data from three different individuals. The time traces represent heart rate data collected over exercise sessions consisting of five exercise cycles (i.e., trace 601 and 602) or six exercise cycles (I e., trace 603). Analysis of pre-exercise rest portions of these traces yields baseline heart rates of 86, 58, and 78 beats per minute, respectively.

[0060] Analysis also includes identification of peak heart rates and minimum heart rates for each of the last four exercise cycles in each trace. The peak heart rates are indicated by square symbols in FIGS. 6a, 6b, and 6c. The peak heart rates for the last four cycles in trace 601, in descending order, are 169, 164, 158, and 149 beats per minute. Similarly, for trace 602 the peak heart rates are 169, 165, 168, and 158 beats per minute, and for trace 603 the peak heart rates are 105, 102, 104, and 95 beats per minute.

[0061] Analysis also includes calculating upward and downward slopes for the last exercise cycle in each trace. For traces 601, 602, and 603, upward and downward slope pairs have values of (48, 24), (72, 60) and (24, 24), respectively.

[0062] In each of FIGS. 6a, 6b, and 6c, the pre-exercise rest portion, the intervening rest portions, and the post-exercise rest portion can be combined to form a cumulative rest portion. Analysis of the leading edge of the cumulative rest portions yields baseline slopes that are positive. The magnitude of these slopes is proportional to the rate of increase of base line heart rates during the exercise sessions. The baseline slopes for traces 601, 602, and 603 are 150.9, 60.3, and 9.4,respectively. These baseline slopes are exemplified with lines 607, 608, and 609, respectively. It has been empirically found that the baseline slope correlates positively with an individual's physiological condition. It is believed that higher (i.e., steeper) baseline slopes correspond to better physiological conditions. Thus, measurement of a baseline slope can be used to assess an individual's physiological condition and to monitor an individual's progress.

[0063] Based on these peak and base line heart rates, baseline, upward, and downward slopes, heart wave indices for each individual are calculated, for example, according to:

$$\text{HWI} = (\text{peak heart rate of last cycle}) + \text{baseline slope}$$

[0064] By this analysis of traces 601, 602, and 603, heart wave indices of 320, 229, and 114 are obtained for the three different individuals, respectively. The relatively low heart wave index of 114 obtained from the analysis of trace 603 correlates positively with the poor physiological condition of the third individual, who was clinically found to suffer from congestive heart disease.

[0065] The shape cumulative rest portions of time traces 601, 602, and 603 exhibit different degrees of parabolicity, which are believed to correspond to good, moderate, and poor physiological conditions, respectively. As an alternate or in addition to baseline slopes, the degree of parabolicity can be quantified by fitting a parabola to the cumulative rest portion. Fitted parabolas 604-606 exhibiting varying degrees of parabolicity are shown in FIGS. 6a, 6b, and 6c, respectively.

[0066] Catalogs can be prepared that link measured coefficients and goodness of fit parameters, or other theoretical models (e.g., based on baseline slopes) to one or more specific abnormal physiological conditions. These catalogs can be based upon actual clinical data and/or theoretical data.

[0067] Abnormal physiological conditions then, can be diagnosed by fitting a parabola through one or more portions of the time trace (e.g., a top portion or a resting portion) to obtain parabolic coefficients and/or goodness of fit parameters. Abnormal physiological conditions can then be identified by determining which of the measured parabolic coefficients and/or goodness of fit parameters are like those listed in the catalog. Abnormal physiological conditions which may be amenable to diagnosis in this manner, can include conditions, such as congestive heart disease, leukemia, anorexia, multiple sclerosis, HIV or other immune deficiencies, astrocytoma of the brain, peripheral ischemia and neuropathy, ileitis, chronic hepatitis, and chronic fatigue syndrome.

[0068] The present invention also can be used to modify an exercise regimen. First, a representative heart wave index for an individual exercising under the regimen is obtained. This heart wave index may represent the results of analyzing time traces from one or more exercise sessions. For example, the representative heart wave index may represent the average of heart wave indices from the analysis of two consecutive exercise sessions, or the average of highest three of five exercise sessions.

[0069] The representative heart wave index is then compared to a target heart wave index associated with the exercise regimen. This comparison is used to determine a need to modify the exercise regimen, such as when the comparison indicates that the individual is not benefitting from the exercise regimen. The exercise regimen can be modified to make it more appropriate to the individual's physiological condition, for example, by raising the target heart rates. In one embodiment of the present invention, the target heart rate can be changed in direct proportion to the difference between the target heart wave index and the representative heart wave index. For example, if the representative heart wave index exceeds the target heart wave index by an amount (e.g., by 20 units), then the target heart rates in the previous regimen can be uniformly increased by one half of the difference (i.e., by 10 units) in the modified regimen.

[0070] An individual's initial physiological capability can be determined and used to individually tailor and prescribe an exercise regimen.

[0071] For example, an individual can be subject to an "exercise test" during which the individual's heart rate is monitored. A time trace is recorded, for example, on a chart recorder or any other electronic recording device.

[0072] The exercise test can include a plurality of test cycles that may be designed to be similar to the exercise cycle described above. The first few cycles can be warm-up cycles, followed by a plurality of intermediate cycles, which are then followed by at least one maximum effort cycle.

[0073] The warm-up cycles can or cannot have defined target heart rates. The intermediate cycles preferably have target heart rates. Most preferably, each of the intermediate cycles have a target heart rate that is greater than that of

its immediately preceding cycle. The increase in target heart rates could vary substantially over an exercise session and in some cases decrease. The amount of the increase, however, is generally less than about 15 beats per minute. A maximum effort cycle does not have a fixed target heart rate but requires that the individual exercise up to the individual's maximum physical capability.

[0074] Test cycles can include a stress portion over a fixed time interval of between about 30 seconds and about 90 seconds, followed by a relaxation portion over another time interval. Preferably, the stress portion is over a time interval that is not in excess of about one minute. The relaxation portion need not be fixed and could be determined by the time it takes the individual's heart rate to recover and stabilize.

[0075] The individual's capability can be assessed in terms of a quantitative figure of merit based on cycle parameters obtained by analyzing the exercise cycles' time trace. In one embodiment, maximum heart rate R_{max}, which is achieved by the individual during each of the test cycles, is determined by analyzing the time trace as described above. Then, a capacity index is assigned a value that is a function of one or more maximum heart rates. For example, the capacity index can be assigned a value equal to the average of maximum heart rates achieved during two consecutive maximum effort cycles. Alternatively, a weighted sum could be used.

[0076] The time trace can be further analyzed to determine upward slopes and downward slopes in the manner discussed above. Then, the capacity index can be assigned a value based on one or more of test cycle parameters, such as maximum heart rates, upward slopes, and downward slopes. For example, the capacity index can be assigned a value equal to a straight or weighted sum or product of a maximum heart rate, upward slope, and downward slope of a maximum effort cycle.

[0077] Once a capacity index is determined, an exercise regimen can be generated. A heart wave index can also be used to generate the regimen. For example, a metric, such as the capacity index or heart wave index, can be received. Then, an individualized exercise regimen can be generated using an algorithm that relates the metric to the regimen. One or both of the receiving and generating steps can use a look-up table. FIG. 7 shows illustrative look-up table 700. Look-up table 700 includes a plurality of capacity indices 720a-720m and a plurality of predetermined exercise regimens 710a-710m.that are respectively linked to the capacity indices. Capacity indices 720a-720m range from 115 to 180 in steps of five units but can have any range and any size steps.

[0078] The use of a look-up table can involve rounding the received metric to a nearest multiple of five or ten units, and then prescribing the exercise regimen corresponding to the rounded number. For example, a received index of 142 can be rounded to 140 (index 720d). Then, using look-up table 700, exercise regimen 710d can be selected and prescribed.

[0079] Exercise regimens 710a-710m can be empirically generated. In this case, the regimens preferably account for the wave nature of cardiac activity and apply the principles for therapeutic treatment and bio-rhythmic feed back taught by Dardik, U.S. Patent Nos. 5,800,737, 5,752,521, 5,163,439, and 5,007,430, incorporated by reference herein. Appendix A, for example, contains an actual set of exercise regimens designed for individual's with capacity indices ranging from 115 to 180 units. The exercise regimens of Appendix A can be used, for example, in look-up table 700.

[0080] Each of regimens 710a-710m can include a plurality of exercise sessions to be performed by the individual over a time period. The time period can be any convenient period of time, such as about one lunar month. Each exercise session preferably includes a plurality of exercise cycles. The exercise cycles can include one or more warm-up cycles and one or more critical cycles that have target heart rates based on a metric.

[0081] The features of these exercise regimens can be better understood in conjunction with FIG. 8, which shows illustrative one month exercise regimen 800 starting April 25, 2000. Regimen 800 is designed for individuals with capacity index 810 having a nominal value of about 115 units. Regimen 800 includes eleven exercise sessions 821-831 and rest week 832. Each of sessions 821-831 includes a plurality of exercise cycles, each of which is designated by a target heart rate and can contain a break if desired.

[0082] The time period over which the sessions are performed can begin with an initial rest period (not shown), end with a final rest period (rest week 832), and include intervening rest periods (April 26, April 28-29, May 1, May 3, May 5-6, May 8, May 10, May 12-13, May 15, and May 17) between the exercise sessions. Intervening rest periods are preferably at least about one day long, while final rest period 832 can be between about 4 days and about 10 days. Regimen 800 is to be performed over about four weeks (including final rest week 823).

[0083] The sessions in an exercise regimen can be synchronized with a lunar cycle. In FIG. 8, for example, regimen 800 is scheduled to start on April 25, 2000 about three weeks prior to a full moon. The exercise sessions can also be synchronized with a circadian rhythm of the individual. For example, in FIG. 8 sessions 821-824, which are to be performed during the first week of the regimen, are scheduled between 6 a.m. and 9 a.m. This time period corresponds to a period of low circadian activity. Sessions 825-827, which are to be performed during the second week of the regimen, are scheduled to be performed between 9 a.m. and 12 p.m. This time period corresponds to a period of moderate circadian activity. Sessions 828-831, which are to be performed in the third week are scheduled to be performed between 3 p.m. and 6 p.m. This period corresponds to a period of high circadian activity.

[0084] The regimens used in the present invention can have a plurality of critical cycles that have sequentially increasing

target heart rates. As used herein, a critical cycle is a cycle that has an associated target heart rate (i.e., is not a warm-up cycle without a defined target heart rate). For example, in session 821 the target heart rates increase sequentially for the first four cycles from 94 beats per minute to 114 beats per minute, and again increase sequentially for the last three cycles from 108 beats per minute to 118 beats per minute. It will be appreciated that the first set of four cycles has a lower initial target heart rate than the second set of three cycles. Also, the initial target heart rate of the second set can be lower than the final target heart rate of the first set. Preferably, the target heart rates for critical cycles within an exercise session increase substantially superlinearly from one cycle to the next.

[0085] Critical cycles can have target heart rates that range up to about 20 beats above the metric being used. For example, sessions 830 and 831 have critical cycles with target heart rates of 130 beats per minute, which is 15 beats per minute higher than the nominal capacity index (i.e., 115).

[0086] Substantially all exercise sessions include a maximum cycle that has a target heart rate that is greater than that for its previous cycle. Preferably, the target heart rates for the maximum cycles increase substantially linearly from one session to the next. For example, in sessions 821-831, the highest target heart rate in each session sequentially increases in small increments from 118 beats per minute to 130 beats per minute (with the exception of a small decrease for session 823). Also, a regimen can include exercise cycles that alternate with rest periods.

[0087] One or more sessions in a regimen can include one or more spike cycles, during which the individual is expected to attempt to reach the target heart rate as rapidly as possible. In FIG. 8, for example, spike cycles are designated by the symbol "S" which is located next to the target heart rates.

[0088] The regimen can be divided into an earlier part and a later part, with the later part having more spike cycles than the early part. For example, in FIG. 8, sessions 821-825 are scheduled to be performed in the first week or so and include no spike cycles, while sessions 827-831 are scheduled to be performed in the second and third weeks and include several spike cycles.

[0089] Regimens provided by this invention can be accompanied by an instruction guide that includes instructions on how to perform the regimen. For example, an instruction could be included that directs the individual to abruptly stop exercising and to rest during a subsequent rest period. An instruction could also be included to exercise as vigorously as possible during a spike cycle.

[0090] The aforementioned methods can be implemented on systems that include an analyzer that preferably is programmable with routines that are capable of processing data contained in a time trace.

[0091] For example, the analyzer can include one or more routines for deriving one or more cycle parameters (such as a maximum heart rate, an upward slope, a downward slope, a peak heart rate, a resting heart rate, and a base line slope) from a time trace. The analyzer can also include routines that use regression analysis for fitting a parabola through a portion of the time trace, and routines for diagnosing abnormal physiological conditions by comparing measured parameters with those in a catalog that are linked with a physiological condition.

[0092] The analyzer can also include routines that compare a measured heart wave index to a target heart wave index and then modify an exercise regimen in response to the comparison.

[0093] In an yet another embodiment the analyzer can include a routine to receive a metric such as a heart wave index or a capacity index, a routine to generate an exercise regimen using an algorithm that relates the metric to the regimen, and a routine to provide the individual with the exercise regimen. The algorithm that relates the metric to the exercise regimen can use, for example, a previously prepared look-up table.

[0094] As used herein, electronic networks could include a local area network, a wireless network, a wired network, a wide area network, the Internet, and any combination thereof. An electronic network can provide links to user interfaces used for sending or receiving data. The interfaces can be any one or more of commercially available interface devices such as a web page, a web browser, a plug-in, a display monitor, a computer terminal, a modem, an audio device, a tactile device (e.g., vibrating surface, etc.), or any combination thereof.

[0095] In accordance with the present invention, software (i.e., instructions) for controlling the aforementioned systems can be provided on computer-readable media. It will be appreciated that each of the steps (described above in accordance with this invention), and any combination of these steps, can be implemented by computer program instructions. These computer program instructions can be loaded onto a computer or other programmable apparatus to produce a machine, such that the instructions which execute on the computer or other programmable apparatus create means for implementing the functions specified in the flowchart block or blocks. These computer program instructions can also be stored in a computer-readable memory that can direct a computer or other programmable apparatus to function in a particular manner, such that the instructions stored in the computer-readable memory produce an article of manufacture including instruction means which implement the function specified in the flowchart block or blocks. The computer program instructions can also be loaded onto a computer or other programmable apparatus to cause a series of operational steps to be performed on the computer or other programmable apparatus to produce a computer implemented process such that the instructions which execute on the computer or other programmable apparatus provide steps for implementing the functions specified in the flowchart block or blocks.

[0096] It will be understood that the foregoing is only illustrative of the principles of the invention, and that various

modifications can be made by those skilled in the art without departing from the scope and spirit of the invention.

Appendix A

[0097]

REGIMEN beginning Apr 25

CAPACITY INDEX: 115'S

6- 9AM Tue Apr 25	6- 9AM Thu Apr 27	6- 9AM Sun Apr 30	6-9AM Tue May 2
94	98	100	102
103	109	107	109
111	114	112	116
114	5 min. break	115	117
10 min. break	111	119	122
108	117		
115	120		
118			
9-12 AM Thu May 4	9-12 AM Sun May 7	9-12 AM Tue May 9	
104	108	111	
114	116	118 (S)	
118 (S)	122 (S)	124 (S)	
122			
3-6 PM Thu May 11	3-6 PM Sun May 14	3-6 PM Tue May 16	3-6 PM Thu May 18
106	110	113	115
115	118 (S)	118 (S)	121 (S)
119	121 (S)	121 (S)	130 (S)
123 (S)	124 (S)	122 (S)	
120 (S)		130 (S)	
124			

CAPACITY INDEX: 120'S

6-9AM Tue Apr 25	6-9AM Thu Apr 27	6-9AM Sun Apr 30	6-9AM Tue May 2
96	100	102	104
102	112	110	112
114	117	116	120
118	5 min. break	119	121
10 min. break	114	123	126
111	121		
119	124		
122			
9-12 AM Thu May 4	9-12 AM Sun May 7	9-12 AM Tue May 9	
106	110	113	

(continued)

9-12 AM	9-12 AM	9-12 AM	
Thu May 4	Sun May 7	Tue May 9	
118	120	122 (S)	
123 (S)	127 (S)	129 (S)	
127			
3-6 PM	3-6 PM	3-6 PM	3-6 PM
Thu May 11	Sun May 14	Tue May 16	Thu May 18
108	112	115	117
119	122 (S)	121 (S)	125 (S)
123	126 (S)	125 (S)	135 (S)
128 (S)	129 (S)	127 (S)	
125 (S)		135 (S)	
129			
CAPACITY INDEX: 125'S			
6-9AM	6-9AM	6-9AM	6-9AM
Tue Apr 25	Thu Apr 27	Sun Apr 30	Tue May 2
98	102	104	106
105	115	114	115
118	121	120	124
122	5 min. break	124	125
10 min. break	118	128	131
114	125		
123	129		
127			
9-12 AM	9-12 AM	9-12 AM	
Thu May 4	Sun May 7	Tue May 9	
118	112	115	
121	123	126 (S)	
127 (S)	132 (S)	134 (S)	
132			
3-6 PM	3-6 PM	3-6 PM	3-6 PM
Thu May 11	Sun May 14	Tue May 16	Thu May 18
110	114	117	119
122	125 (S)	124 (S)	129 (S)
127	130 (S)(BD)	129 (S)	140 (S)
133 (S)	134 (S)	131 (S)	
129 (S)		140 (S)	
134			
CAPACITY INDEX: 130'S			
6-9AM	6-9AM	6-9AM	6-9AM
Tue Apr 25	Thu Apr 27	Sun Apr 30	Tue May 2
100	104	106	108
107	118	117	118

(continued)

CAPACITY INDEX: 130'S

6-9AM	6-9AM	6-9AM	6-9AM
Tue Apr 25	Thu Apr 27	Sun Apr 30	Tue May 2
121	124	124	128
126	5 min. break	128	129
10 min. break	121	132	135
117	129		
127	133		
131			
9-12 AM	9-12 AM	9-12 AM	
Thu May 4	Sun May 7	Tue May 9	
110	114	117	
125	127	130 (S)	
132 (S)	137 (S)	139 (S)	
137			
3-6 PM	3-6 PM	3-6 PM	3-6 PM
Thu May 11	Sun May 14	Tue May 16	Thu May 18
112	116	119	121
126	129 (S)	127 (S)	133 (S)
131	135 (S)	133 (S)	145 (S)
138 (S)	139 (S)	136 (S)	
134 (S)		145 (S)	
139			

CAPACITY INDEX: 135'S

6-9AM	6-9AM	6-9AM	6-9AM
Tue Apr 25	Thu Apr 27	Sun Apr 30	Tue May 2
102	106	108	110
110	121	121	121
125	128	128	132
130	5 min brk	133	133
10 min brk	125	137	140
120	133	131	138
136			
9-12 AM	9-12 AM	9-12 AM	
Thu May 4	Sun May 7	Tue May 9	
112	116	119	
128	130	134(S)	
136(S)	142 (S)	144(S)	
142			
3-6 PM	3-6 PM	3-6 PM	3-6 PM
Thu May 11	Sun May 14	Tue May 16	Thu May 18
114	118	121	123
114	118 (S)	121 (S)	123(S)

(continued)

3-6 PM Thu May 11	3-6 PM Sun May 14	3-6 PM Tue May 16	3-6 PM Thu May 18
135	139 (S)	137(S)	150 (S)
143(S)	144 (S)	140 (S)	
138(S)	150 (S)		
144			

CAPACITY INDEX: 140'S

6-9AM Tue Apr 25	6-9AM Thu Apr 27	6-9AM Sun Apr 30	6-9AM Tue May 2
104	108	110	112
112	124	123	124
128	132	132	136
134	5 min. break	136	137
10 min. break	128	141	144
124	137		
135	142		
140			
9-12 AM Thu May 4	9-12 AM Sun May 7	9-12 AM Tue May 9	
114	118	121	
132	134	138 (S)	
141 (S)	147 (S)	149 (S)	
147			
3-6 PM Thu May 11	3-6 PM Sun May 14	3-6 PM Tue May 16	3-6 PM Thu May 18
116	120	123	125
133	136 (S)	133 (S)	141 (S)
139	144 (S)	141 (S)	155 (S)
148 (S)	149 (S)	145 (S)	
141 (S)		155 (S)	
149			

CAPACITY INDEX: 145'S

6-9AM Tue Apr 25	6-9AM Thu Apr 27	6-9AM Sun Apr 30	6-9AM Tue May 2
106	110	112	114
115	128	127	128
132	137	137	141
139	5 min. break	141	142
10 min. break	132	146	149
128	142		
139	147		
145			

(continued)

9-12 AM	9-12 AM	9-12 AM	
Thu May 4	Sun May 7	Tue May 9	
116	120	123	
135	138	142 (S)	
145 (S)	152 (S)	154 (S)	
152			
3-6 PM	3-6 PM	3-6 PM	3-6 PM
Thu May 11	Sun May 14	Tue May 16	Thu May 18
118	122	125	127
137	140 (S)	136 (S)	145 (S)
143	148 (S)	145 (S)	160 (S)
153 (S)	154 (S)	149 (S)	
145 (S)		160 (S)	
154			
CAPACITY INDEX: 150'S			
6-9AM	6-9AM	6-9AM	6-9AM
Tue Apr 25	Thu Apr 27	Sun Apr 30	Tue May 2
108	112	114	116
117	130	129	130
135	140	140	144
142	5 min. break	144	145
10 min. break	135	150	153
131	145		
143	151		
149			
9-12 AM	9-12 AM	9-12 AM	
Thu May 4	Sun May 7	Tue May 9	
118	122	125	
139	141	146 (S)	
150 (S)	157 (S)	159 (S)	
157			
3-6 PM	3-6 PM	3-6 PM	3-6 PM
Thu May 11	Sun May 14	Tue May 16	Thu May 18
120	124	127	129
140	143 (S)	139 (S)	149 (S)
147	153 (S)	149 (S)	165 (S)
158 (S)	159 (S)	154 (S)	
150 (S)		165 (S)	
159			
CAPACITY INDEX: 160'S			
6-9AM	6-9AM	6-9AM	6-9AM
Tue Apr 25	Thu Apr 27	Sun Apr 30	Tue May 2
112	116	118	120

(continued)

CAPACITY INDEX: 160'S

6-9AM Tue Apr 25	6-9AM Thu Apr 27	6-9AM Sun Apr 30	6-9AM Tue May 2
122	136	135	136
142	148	148	152
150	5 min. break	152	153
10 min. break	142	159	162
138	153		
151	160		
158.			
9-12 AM Thu May 4	9-12 AM Sun May 7	9-12 AM Tue May 9	
122	126	129	
146	148	154 (S)	
159 (S)	167 (S)	169 (S)	
167			
3-6 PM Thu May 11	3-6 PM Sun May 14	3-6 PM Tue May 16	3-6 PM Thu May 18
124	128	131	133
147	150 (S)	145 (S)	157 (S)
155	162 (S)	157 (S)	175 (S)
168 (S)	169 (S)	163 (S)	
159 (S)		175 (S)	
169			

CAPACITY INDEX: 170'S

6-9AM Tue Apr 25	6-9AM Thu Apr 27	6-9AM Sun Apr 30	6-9AM Tue May 2
116	120	122	124
125	142	141	142
149	156	156	160
158	5 min break	160	161
10 min break	149	168	171
145	161		
159	169		
167			
9-12 AM Thu May 4	9-12 AM Sun May 7	9-12 AM Tue May 9	
126	130	133	
153	155	162 (S)	
168 (S)	177 (S)	179 (S)	
177			
3-6 PM Thu May 11	3-6 PM Sun May 14	3-6 PM Tue May 16	3-6 PM Thu May 18
128	132	135	137
154	157 (S)	151 (S)	165 (S)
163	171 (S)	165 (S)	185 (S)
178 (S)	179 (S)	172 (S)	
168 (S)		185 (S)	
179			

(continued)

CAPACITY INDEX: 175'S

6-9AM Tue Apr 25	6- 9AM Thu Apr 27	6-9AM Sun Apr 30	6- 9AM Tue May 2
118	122	124	126
130	145	145	145
153	160	160	164
162	5 min. break	165	165
10 min. break	153	173	176
148	165		
163	174		
172			
9-12 AM Thu May 4	9-12 AM Sun May 7	9-12 AM Tue May 9	
128	132	135	
156	158	166 (S)	
172 (S)	182 (S)	184 (S)	
182			
3-6 PM Thu May 11	3-6 PM Sun May 14	3-6 PM Tue May 16	3-6 PM Thu May 18
130	134	137	139
157	160 (S)	154 (S)	169 (S)
167	175 (S)	169 (S)	190 (S)
183 (S)	184 (S)	176 (S)	
172 (S)		190 (S)	
184			

CAPACITY INDEX: 180'S

6-9AM Tue Apr 25	6-9AM Thu Apr 27	6-9AM Sun Apr 30	6-9AM Tue May 2
120	124	126	128
132	148	147	148
156	164	164	168
166	5 min break	168	169
10 min break	156	177	180
152	169		
167	178		
176			
9-12 AM Thu May 4	9-12 AM Sun May 7	9-12 AM Tue May 9	
130	134	137	
160	162	170 (S)	
177 (S)	187 (S)	189 (S)	
187			
3-6 PM Thu May 11	3-6 PM Sun May 14	3-6 PM Tue May 16	3-6 PM Thu May 18
132	136	139	141
161	164 (S)	157 (S)	173 (S)
171	180 (S)	173 (S)	195 (S)
188 (S)	189 (S)	181 (S)	
177 (S)		195 (S)	
189			

Claims

1. A system for assessing an individual's physiological condition during said individual's performance of an exercise regimen, wherein said regimen comprises at least one exercise session and 5 wherein said session comprises at least one exercise cycle, said system comprising:

   an electronic monitor that monitors a heart rate of said individual during at least one of said sessions;
   a recorder for recording a time trace of said heart rate to an electronic file; and
   an analyzer for analyzing said electronic file, wherein said analyzer determines at least one cycle parameter and assigns a value to a heart wave index indicative of said condition based on said parameter, and wherein said analyzer is adapted to statistically fit a parabola through at least a portion of said time trace to create a fit, said fit being **characterized by** at least one goodness of fit parameter.

2. The system of claim 1 wherein said recorder, for said at least one exercise cycle, is adapted to record at least one portion selected from a group consisting of a rising portion, a top portion into which said rising portion transitions, and a falling portion into which said top portion transitions, a pre-exercise rest portion, an intervening rest portion corresponding to a period from an end of said at least one exercise cycle to a beginning of a next exercise cycle, and a post-exercise rest portion.

3. The system of claim 1 or 2 wherein said analyzer is adapted to determine at least one parameter selected from a group consisting of a maximum heart rate, an upward slope within said rising portion, a downward slope within said falling portion, a minimum heart rate within said falling portion, a peak heart rate within said top portion, a resting heart rate, and a base line slope.

4. The system of claim 1, 2 or 3 wherein said analyzer is adapted to statistically fit said parabola through at least said portion of said time trace to create said fit using regression analysis, and wherein said analyzer assigns said value to said heart wave index based on said at least one goodness of fit parameter.

5. The system of claim 4 wherein said analyzer further comprises routines for diagnosing abnormal physiological conditions by comparing said set of goodness of fit parameters with a catalog, said catalog relating said goodness of fit parameters to said physiological conditions.

6. The system of any one of claims 1 to 5 wherein said analyzer is adapted to assign to said heart wave index a value based on at least one parameter selected a group consisting of an upward slope, a downward slope, a minimum heart rate, a peak heart rate, a resting heart rate, a base line slope, and a set of goodness of fit parameters.

7. The system of any one of claims 1 to 6 further adapted to a use for modifying an exercise regimen for said individual, said regimen having a target heart wave index and comprising at least one exercise session that comprises at least one exercise cycle having a target heart rate, wherein said analyzer compares said heart wave index to said target heart wave index and changes said target heart rate and said target heart wave index in response to said comparison.

8. The system of any one of claims 1 to 7 further adapted to a use for determining a capacity index, wherein said individual undergoes an exercise test, said test comprising a plurality of test cycles, wherein said plurality of test cycles comprises a maximum effort cycle during which said individual exercises to said individual's maximum physical capability, and wherein said electronic monitor monitors a heart rate of said individual during said test and said analyzer

   (1) determines at least one cycle parameter; and
   (2) assigns to said capacity index a value based on said at least one of said cycle parameter.

9. The system of claim 8 wherein said at least one cycle parameter is selected from the group consisting of a first peak heart rate corresponding to a maximum heart rate monitored during said maximum effort cycle, a second peak heart rate corresponding to a maximum heart rate monitored during another of said plurality of test cycles that is not said maximum effort cycle, an upward slope of said heart rate monitored during a part of a stress portion of at least one of said plurality of test cycles, determines a downward slope of said heart rate monitored during a part of a relaxation portion of the at least one of said plurality of test cycles.

10. The system of claim 8 or 9 wherein said at least one cycle parameter is selected from a group consisting of a peak

heart rate, an upward slope, and a downward slope.

11. The system of claim 8, 9 or 10 further adapted to a use for prescribing an exercise regimen for an individual, wherein said analyzer is programmed to: (1) receive a metric indicative of said individual's physiological condition and (2) generate said exercise regimen using an algorithm that relates said heart wave index to said regimen; and wherein said system further comprises:

    an output device that provides said individual with said exercise regimen.

12. The system of claim 11 wherein said algorithm uses a look-up table.

13. The system of any one of claims 1 to 12 wherein said analyzer is adapted to generate an exercise regimen that comprises a plurality of exercise sessions comprising:

    at least one warm up cycle; and
    at least one critical cycle that has a target heart rate based on said heart wave index.

14. The system of any one of claims 1 to 3 wherein said analyzer is adapted to synchronize said regimen with at least one cyclic phenomena selected from a group consisting of a lunar cycle and a circadian rhythm of said-individual.

15. The system of any one of claims 1 to 14 wherein said analyzer is adapted to generate an instruction set that provides directions to said individual on how to exercise.

16. The system of any one of claims 1 to 15 further comprising a communication link between said recorder and said analyzer, wherein said link comprises an electronic network selected from a group consisting of a local area network, a wireless network, a wired network, a wide area network, an Internet connection, and any combination thereof.

17. The system of claim 16 further comprising a user interface selected from a group consisting of an Internet web page, a display monitor, a computer terminal, an audio device, a tactile device, or any combination thereof.

Patentansprüche

1. System zur Bewertung der physiologischen Kondition einer Person während der Durchführung eines Trainingsprogramms durch die Person, wobei das Programm mindestens eine Trainingssitzung aufweist und wobei die Sitzung mindestens einen Trainingszyklus aufweist, wobei das System aufweist:

    ein elektronisches Überwachungsgerät, das eine Herzfrequenz der Person während mindestens einer der Sitzungen überwacht;
    ein Aufzeichnungsgerät zum Aufzeichnen eines zeitlichen Verlaufs der Herzfrequenz in einer elektronischen Datei; und
    ein Analysengerät zum Analysieren der elektronischen Datei, wobei das Analysengerät mindestens einen Zyklusparameter bestimmt und einen Wert einem Herzwellenindex als Anzeige der Kondition auf der Grundlage des Parameters zuweist und wobei das Analysengerät geeignet ist, eine Parabel über mindestens einen Abschnitt des zeitlichen Verlaufs statistisch anzupassen, um eine Anpassung zu erzeugen, wobei die Anpassung durch mindestens einen Anpassungsgüteparameter **gekennzeichnet** ist.

2. System nach Anspruch 1, wobei für den mindestens einen Trainingszyklus das Aufzeichnungsgerät geeignet ist, mindestens einen Abschnitt aufzuzeichnen, der aus einer Gruppe ausgewählt ist, die aus einem steigenden Abschnitt, einem oberen Abschnitt, in den der steigende Abschnitt übergeht, und einem fallenden Abschnitt, in den der obere Abschnitt übergeht, einem Ruheabschnitt vor dem Training, einem Zwischenruheabschnitt in Entsprechung zu einer Periode von einem Ende des mindestens einen Trainingszyklus bis zu einem Beginn eines nächsten Trainingszyklus und einem Ruheabschnitt nach dem Training besteht.

3. System nach Anspruch 1 oder 2, wobei das Analysengerät geeignet ist, mindestens einen Parameter zu bestimmen, der aus einer Gruppe ausgewählt ist, die aus einer maximalen Herzfrequenz, einer Steigung im steigenden Abschnitt, einem Gefälle im fallenden Abschnitt, einer minimalen Herzfrequenz im fallenden Abschnitt, einer Spitzenherzfrequenz im oberen Abschnitt, einer Ruheherzfrequenz und einer Grundliniensteilheit besteht.

4. System nach Anspruch 1, 2 oder 3, wobei das Analysengerät geeignet ist, die Parabel über mindestens den Abschnitt des zeitlichen Verlaufs statistisch anzupassen, um die Anpassung mit Hilfe von Regressionsanalyse zu erzeugen, und wobei das Analysengerät den Wert dem Herzwellenindex auf der Grundlage des mindestens einen Anpassungsgüteparameters zuweist.

5. System nach Anspruch 4, wobei das Analysengerät ferner Routinen zum Diagnostizieren anomaler physiologischer Konditionen durch Vergleichen des Satzes von Anpassungsgüteparametern mit einem Katalog aufweist, wobei der Katalog die Anpassungsgüteparameter mit den physiologischen Konditionen in Beziehung setzt.

6. System nach einem der Ansprüche 1 bis 5, wobei das Analysengerät geeignet ist, dem Herzwellenindex einen Wert auf der Grundlage mindestens eines Parameters zuzuweisen, der aus einer Gruppe ausgewählt ist, die aus einer Steigung, einem Gefälle, einer minimalen Herzfrequenz, einer Spitzenherzfrequenz, einer Ruheherzfrequenz, einer Grundliniensteilheit und einem Satz von Anpassungsgüteparametern besteht.

7. System nach einem der Ansprüche 1 bis 6, ferner geeignet für eine Verwendung zum Modifizieren eines Trainingsprogramms für die Person, wobei das Programm einen Soll-Herzwellenindex hat und mindestens eine Trainingssitzung aufweist, die mindestens einen Trainingszyklus mit einer Soll-Herzfrequenz aufweist, wobei das Analysengerät den Herzwellenindex mit dem Soll-Herzwellenindex vergleicht und die Soll-Herzfrequenz sowie den Soll-Herzwellenindex als Reaktion auf den Vergleich ändert.

8. System nach einem der Ansprüche 1 bis 7, ferner geeignet für eine Verwendung zum Bestimmen eines Kapazitätsindex, wobei die Person einen Trainingstest durchführt, wobei der Test mehrere Testzyklen aufweist, wobei die mehreren Testzyklen einen maximalen Belastungszyklus aufweisen, in dessen Verlauf die Person bis zum maximalen körperlichen Vermögen der Person trainiert, und wobei das elektronische Überwachungsgerät eine Herzfrequenz der Person während des Tests überwacht und das Analysengerät (1) mindestens einen Zyklusparameter bestimmt; und (2) dem Kapazitätsindex einen Wert auf der Grundlage des mindestens einen Zyklusparameters zuweist.

9. System nach Anspruch 8, wobei der mindestens eine Zyklusparameter aus der Gruppe ausgewählt ist, die aus folgendem besteht: einer ersten Spitzenherzfrequenz in Entsprechung zu einer während des maximalen Belastungszyklus überwachten maximalen Herzfrequenz, einer zweiten Spitzenherzfrequenz in Entsprechung zu einer während eines weiteren der mehreren Testzyklen, der nicht der maximale Belastungszyklus ist, überwachten maximalen Herzfrequenz, wobei eine Steigung der Herzfrequenz, die während eines Teils eines Beanspruchungsabschnitts mindestens eines der mehreren Testzyklen überwacht wird, ein Gefälle der Herzfrequenz bestimmt, die während eines Teils eines Entspannungsabschnitts des mindestens einen der mehreren Testzyklen überwacht wird.

10. System nach Anspruch 8 oder 9, wobei der mindestens eine Zyklusparameter aus einer Gruppe ausgewählt ist, die aus einer Spitzenherzfrequenz, einer Steigung und einem Gefälle besteht.

11. System nach Anspruch 8, 9 oder 10, ferner geeignet für eine Verwendung zum Verordnen eines Trainingsprogramms für eine Person, wobei das Analysengerät so programmiert ist, daß es (1) ein Maß als Anzeige der physiologischen Kondition der Person empfängt und (2) das Trainingsprogramm mit Hilfe eines Algorithmus erstellt, der den Herzwellenindex mit dem Programm in Beziehung setzt; und wobei das System ferner aufweist:

eine Ausgabevorrichtung, die das Trainingsprogramm für die Person bereitstellt.

12. System nach Anspruch 11, wobei der Algorithmus eine Nachschlagetabelle verwendet.

13. System nach einem der Ansprüche 1 bis 12, wobei das Analysengerät geeignet ist, ein Trainingsprogramm zu erstellen, das mehrere Trainingssitzungen mit folgendem aufweist:

mindestens einem Aufwärmzyklus; und
mindestens einem kritischen Zyklus, der eine Soll-Herzfrequenz auf der Grundlage des Herzwellenindex hat.

14. System nach einem der Ansprüche 1 bis 13, wobei das Analysengerät geeignet ist, das Programm mit mindestens einer zyklischen Erscheinung zu synchronisieren, die aus einer Gruppe ausgewählt ist, die aus einem Mondzyklus und einem Tag-Nacht-Rhythmus der Person besteht.

15. System nach einem der Ansprüche 1 bis 14, wobei das Analysengerät geeignet ist, einen Befehlssatz zu erstellen, der Anweisungen für die Person bereitstellt, wie zu trainieren ist.

16. System nach einem der Ansprüche 1 bis 15, ferner mit einer Kommunikationsverbindung zwischen dem Aufzeichnungsgerät und dem Analysengerät, wobei die Verbindung ein elektronisches Netzwerk aufweist, das aus einer Gruppe ausgewählt ist, die aus einem lokalen Netzwerk, einem drahtlosen Netzwerk, einem drahtgebundenen Netzwerk, einem Weitbereichsnetzwerk, einer Internetverbindung und jeder Kombination daraus besteht.

17. System nach Anspruch 16, ferner mit einer Benutzerschnittstelle, die aus einer Gruppe ausgewählt ist, die aus einer Internetwebseite, einem Anzeigemonitor, einem Computerterminal, einer akustischen Vorrichtung, einer taktilen Vorrichtung oder jeder Kombination daraus besteht.

Revendications

1. Système pour évaluer une condition physiologique individuelle pendant ladite performance individuelle d'un régime d'exercices, dans lequel ledit régime comporte au moins une session d'exercices et dans lequel ladite session comporte au moins un cycle d'exercices, ledit système comportant :

   un moniteur électronique qui surveille un rythme cardiaque dudit individu pendant au moins une desdites sessions ;
   un enregistreur pour enregistrer une trace de temps dudit rythme cardiaque dans un fichier électronique ; et
   un analyseur pour analyser ledit fichier électronique, dans lequel ledit analyseur détermine au moins un paramètre de cycle et attribue une valeur à un indice d'onde cardiaque indicatif de ladite condition sur la base dudit paramètre, et dans lequel ledit analyseur est adapté pour statistiquement ajuster une parabole à travers au moins une partie de ladite trace de temps pour créer un ajustement, ledit ajustement étant **caractérisé par** au moins une qualité de paramètre d'accès.

2. Système selon la revendication 1, dans lequel ledit enregistreur, pour ledit au moins un cycle d'exercices, est adapté pour enregistrer au moins une partie sélectionnée dans un groupe constitué d'une partie ascendante, d'une partie supérieure dans laquelle ladite partie ascendante effectue une transition, et d'une partie descendante dans laquelle ladite partie supérieure effectue une transition, d'une partie de repos de préexercice, d'une partie de repos d'intervention correspondant à une période à partir d'une fin dudit au moins un cycle d'exercices jusqu'à un début d'un prochain cycle d'exercices, et d'une partie de repos de post-exercice.

3. Système selon la revendication 1 ou 2, dans lequel ledit analyseur est adapté pour déterminer au moins un paramètre sélectionné dans un groupe constitué d'un rythme cardiaque maximum, d'une pente vers le haut dans ladite partie ascendante, d'une pente vers le bas dans ladite partie descendante, d'un rythme cardiaque minimum dans ladite partie descendante, d'un rythme cardiaque maximum dans ladite partie supérieure, d'un rythme cardiaque au repos, et d'une pente de ligne de base.

4. Système selon la revendication 1, 2 ou 3, dans lequel ledit analyseur est adapté pour ajuster statistiquement ladite parabole à travers au moins ladite partie de trace de temps pour créer ledit ajustement en utilisant une analyse de régression, et dans lequel ledit analyseur attribue ladite valeur audit indice d'onde cardiaque sur la base de ladite au moins une qualité de paramètre d'ajustement.

5. Système selon la revendication 4, dans lequel ledit analyseur comporte en outre des routines pour diagnostiquer des conditions physiologiques anormales en comparant ledit ensemble de qualités des paramètres d'accès à un catalogue, ledit catalogue mettant en rapport ladite qualité de paramètres d'ajustement avec lesdites conditions physiologiques.

6. Système selon l'une quelconque des revendications 1 à 5, dans lequel ledit analyseur est adapté pour attribuer audit indice d'onde cardiaque une valeur basée sur au moins un paramètre sélectionné dans un groupe constitué d'une pente vers le haut, d'une pente vers le bas, d'un rythme cardiaque minimum, d'un rythme cardiaque maximum, d'un rythme cardiaque au repos, d'une pente de ligne de base, et d'un ensemble de qualités de paramètres d'ajustement.

7. Système selon l'une quelconque des revendications 1 à 6, adapté en outre pour une utilisation pour modifier un

régime d'exercices pour ledit individu, ledit régime ayant un indice d'onde cardiaque cible, et comportant au moins une session d'exercices qui comporte au moins un cycle d'exercices ayant un rythme cardiaque cible, dans lequel ledit analyseur compare l'indice d'onde cardiaque audit indice d'onde cardiaque cible, et change ledit rythme cardiaque cible et ledit indice d'onde cardiaque cible en réponse à ladite comparaison.

8. Système selon l'une quelconque des revendications 1 à 7, adapté en outre pour une utilisation pour déterminer un indice de capacité, dans lequel ledit individu subit un test d'exercice, ledit test comportant une pluralité de cycles de test, dans lequel ladite pluralité de cycles de test comporte un cycle d'effort maximum pendant lequel ledit individu pratique un exercice à ladite capacité physique maximum individuelle, et dans lequel ledit moniteur électronique surveille un rythme cardiaque dudit individu pendant ledit test, et ledit analyseur (1) détermine au moins un paramètre de cycle ; et (2) attribue audit indice de capacité une valeur basée sur ledit au moins un desdits paramètres de cycle.

9. Système selon la revendication 8, dans lequel ledit au moins un paramètre de cycle est sélectionné dans le groupe constitué d'un premier rythme cardiaque maximum correspondant à un rythme cardiaque maximum surveillé pendant ledit cycle d'effort maximum, un second rythme cardiaque maximum correspondant à un rythme cardiaque maximum surveillé pendant un autre de ladite pluralité de cycles de test autre qui n'est pas ledit cycle d'effort maximum, une pente vers le haut dudit rythme cardiaque surveillé pendant une partie d'une partie d'effort d'au moins un de ladite pluralité de cycles de test, détermine une pente vers le bas dudit rythme cardiaque surveillé pendant une partie d'une partie de relaxation du au moins un de ladite pluralité de cycles de test.

10. Système selon la revendication 8 ou 9, dans lequel ledit au moins un paramètre de cycle est sélectionné dans un groupe constitué d'un rythme cardiaque maximum, d'une pente vers le haut, et d'une pente vers le bas.

11. Système selon la revendication 8, 9 ou 10, adapté en outre pour une utilisation pour prescrire un régime d'exercices pour un individu, dans lequel ledit analyseur est programmé pour: (1) recevoir une mesure indiquant ladite condition physiologique individuelle, et (2) générer ledit régime d'exercices en utilisant un algorithme qui relie ledit indice d'onde cardiaque audit régime ; et dans lequel ledit système comporte en outre :

un dispositif de sortie qui dote ledit individu dudit régime d'exercices.

12. Système selon la revendication 11, dans lequel ledit algorithme utilise un tableau à consulter.

13. Système selon l'une quelconque des revendications 1 à 12, dans lequel ledit analyseur est adapté pour générer un régime d'exercices qui comporte une pluralité de sessions d'exercices comportant :

au moins un cycle d'échauffement ; et
au moins un cycle critique qui a un rythme cardiaque cible basé sur ledit indice d'onde cardiaque.

14. Système selon l'une quelconque des revendications 1 à 13, dans lequel ledit analyseur est adapté pour synchroniser ledit régime avec au moins un phénomène cyclique sélectionné dans un groupe constitué d'un cycle lunaire et d'un rythme circadien dudit individu.

15. Système selon l'une quelconque des revendications 1 à 14, dans lequel ledit analyseur est adapté pour générer un ensemble d'instructions qui fournissent des directions audit individu sur la façon de faire de l'exercice.

16. Système selon l'une quelconque des revendications 1 à 15, comportant en outre une liaison de communication entre ledit enregistreur et ledit analyseur, dans lequel ladite liaison comporte un réseau électronique sélectionné dans un groupe constitué d'un réseau local, d'un réseau sans fil, d'un réseau câblé, d'un réseau étendu, d'une connexion Internet, et d'une quelconque combinaison de ceux-ci.

17. Système selon la revendication 16, comportant en outre une interface utilisateur sélectionnée dans un groupe constitué d'une page Web d'Internet, d'un écran de visualisation, d'un terminal d'ordinateur, d'un dispositif audio, d'un dispositif tactile, ou d'une quelconque combinaison de ceux-ci.

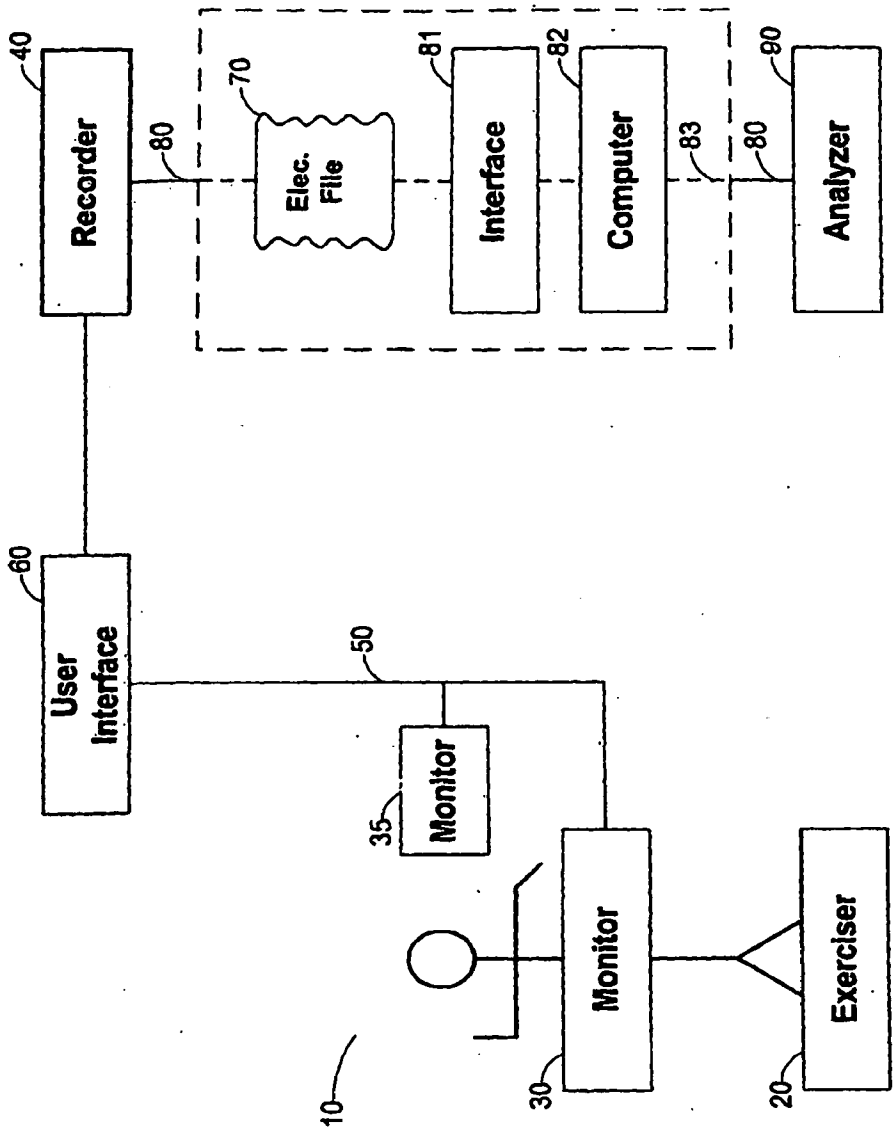
Recorder
40
80
Elec. File
70
Interface
81
Computer
82
83
80
Analyzer
90
User Interface
60
50
Monitor
35
Monitor
30
Exerciser
20
10

FIG. 1

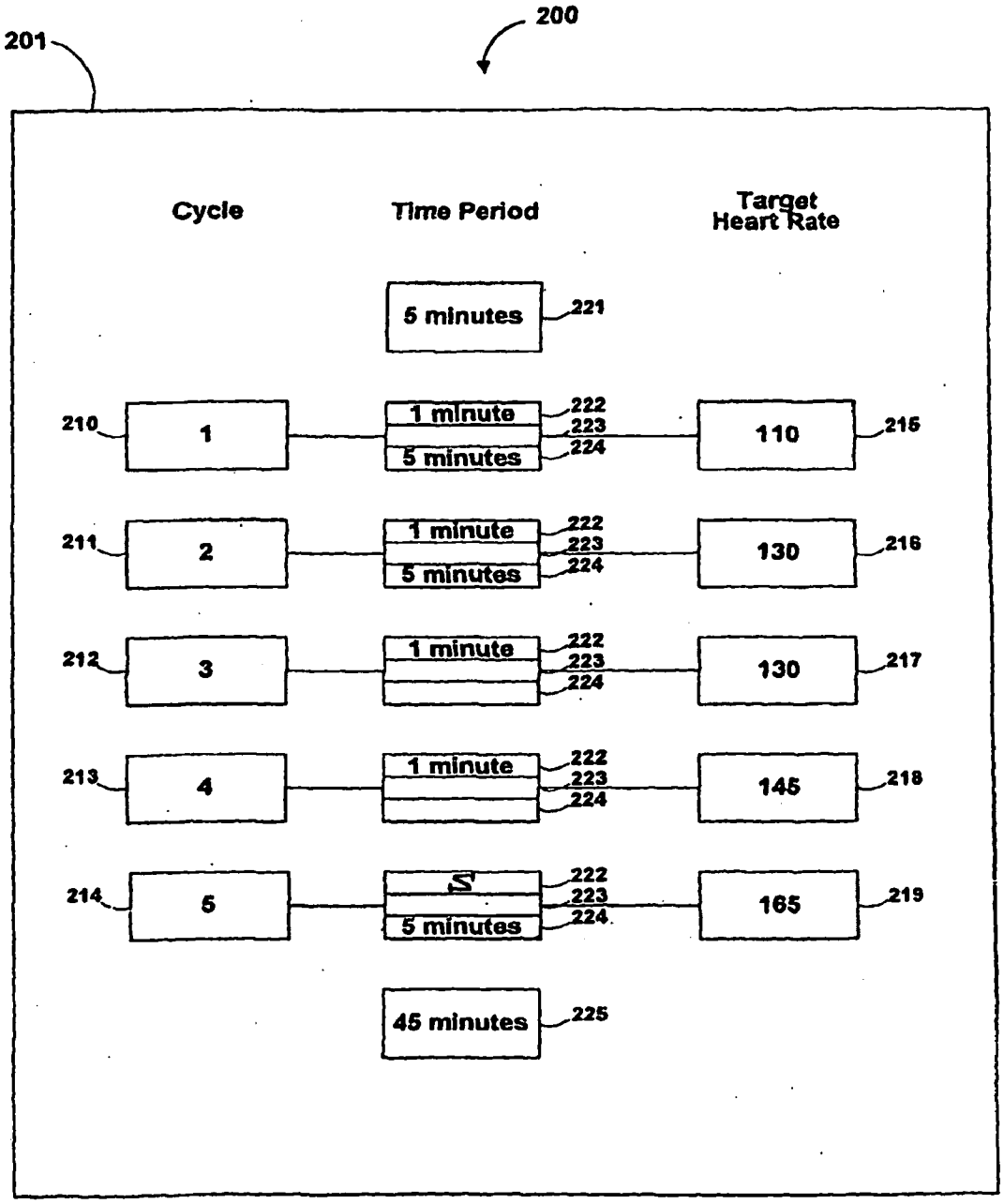
200
201
Cycle
Time Period
Target Heart Rate
5 minutes
221
210
1
1 minute
5 minutes
222
223
224
110
215
211
2
1 minute
5 minutes
222
223
224
130
216
212
3
1 minute
222
223
224
130
217
213
4
1 minute
222
223
224
145
218
214
5
S
5 minutes
222
223
224
165
219
45 minutes
225

FIG. 2

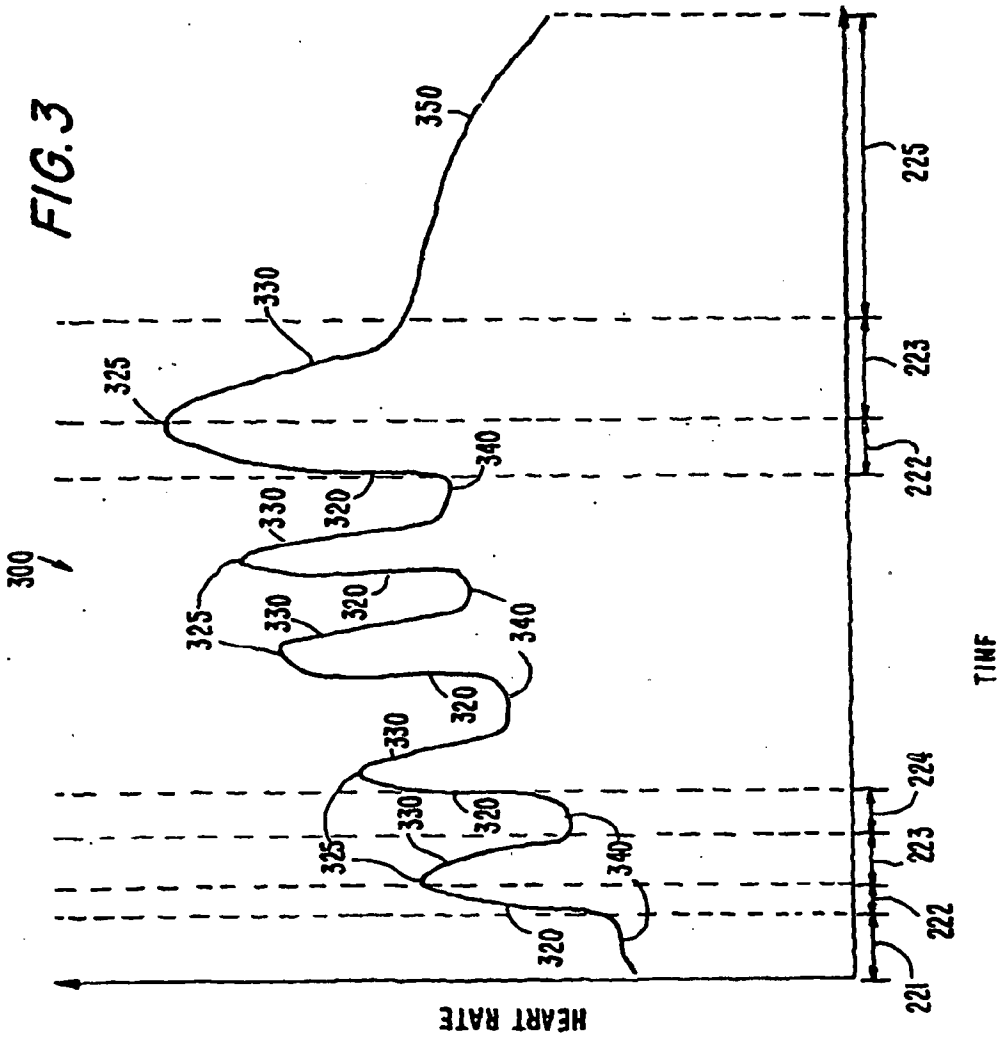

FIG. 3

FIG. 3a

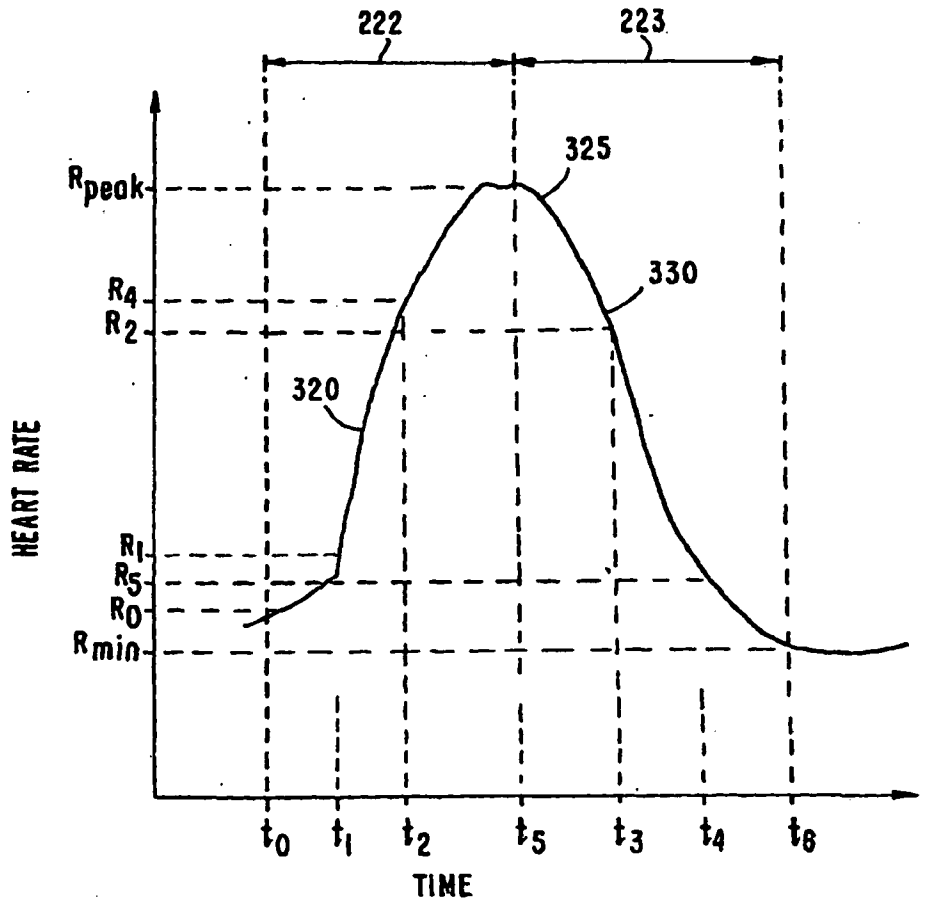
222
223
325
330
320
Rpeak
R4
R2
R1
R5
R0
Rmin
HEART RATE
t0
t1
t2
t5
t3
t4
t6
TIME

FIG.5

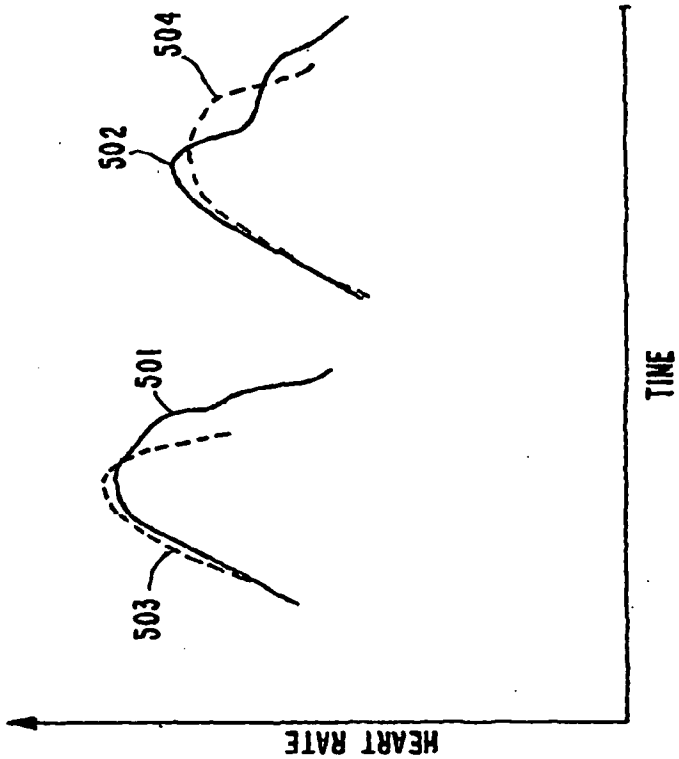

FIG.4

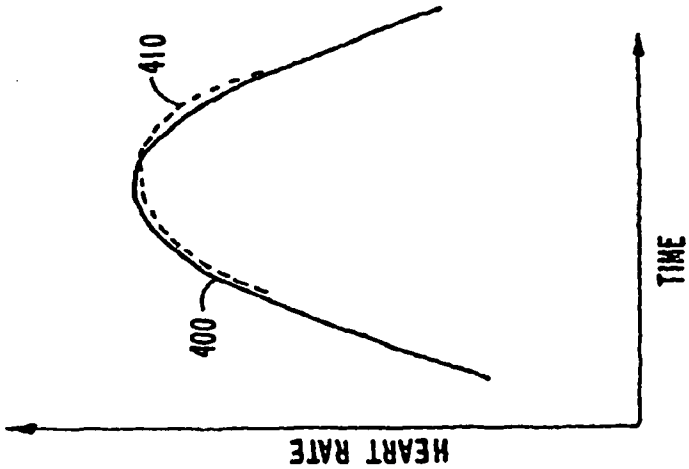

FIG. 6a

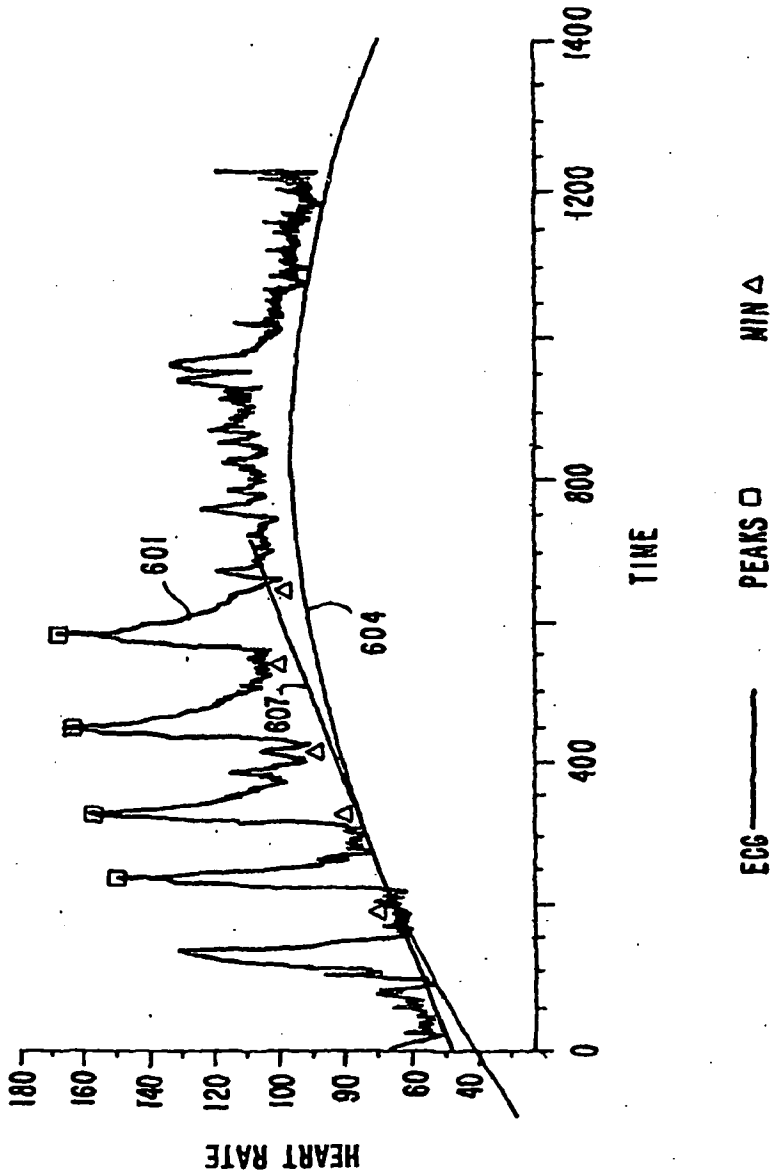
HEART RATE
180
160
140
120
100
90
60
40
0
400
800
1200
1400
TIME
601
604
607
ECG
PEAKS
MIN

FIG. 6b

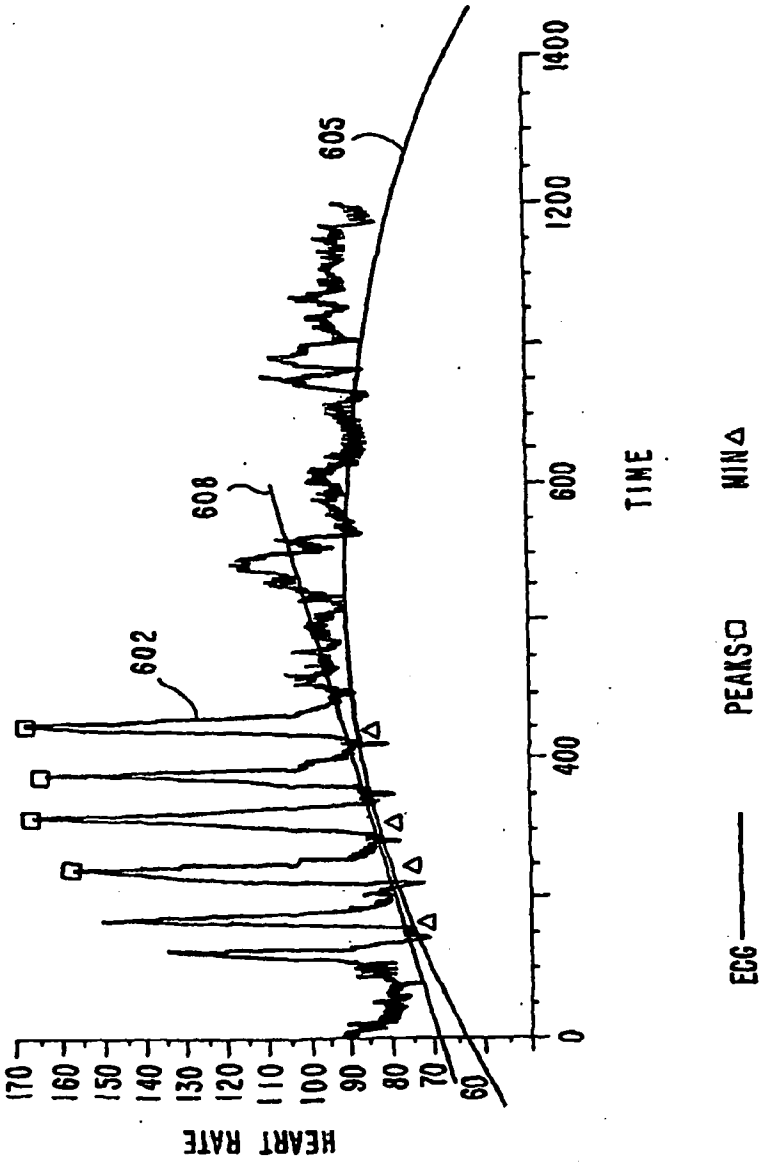
HEART RATE
170
160
150
140
130
120
110
100
90
80
70
60
0
400
600
1200
1400
TIME
602
608
605
ECG
PEAKS
MIN

FIG. 6c

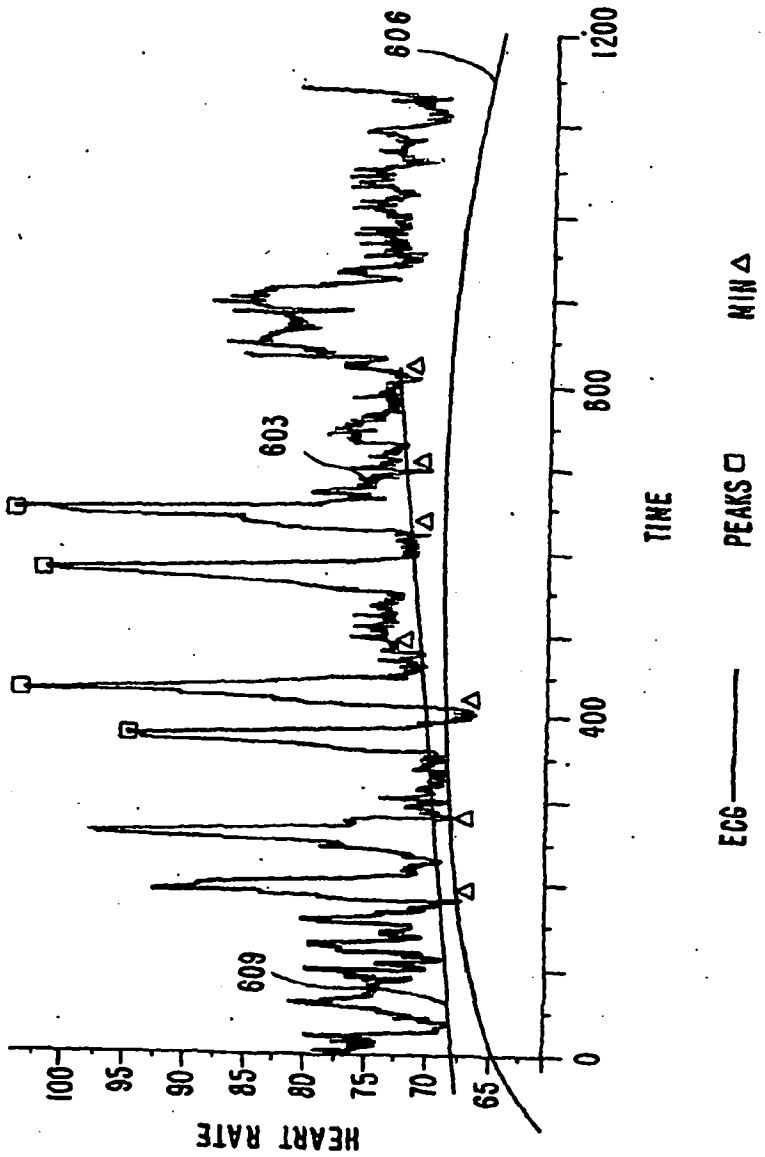

Aretech LLC - Exhibit 1028, Page 00030

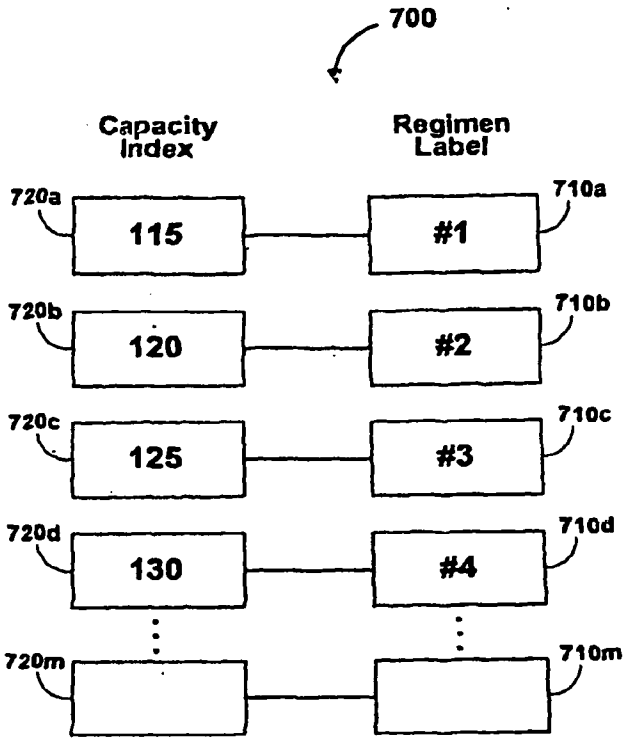
700
Capacity Index
Regimen Label
720a
115
#1
710a
720b
120
#2
710b
720c
125
#3
710c
720d
130
#4
710d
720m
710m

FIG. 7

REGIMEN beginning April 25

115's (810)

6-9 AM

Tue Apr 25 (821)	Thu Apr 27 (822)	Sun Apr 30 (823)	Tue May 2 (824)
94	98	100	102
103	109	107	109
111	114	112	116
114	5 minute break	115	117
10 minute break	111	119	122
108	117		
115	120		
118			

9-12 AM

Thu May 4 (825)	Sun May 7 (826)	Tue May 9 (827)	
104	108	111	
114	116	118 (s)	
118 (s)	122 (s)	124 (s)	
122			

3-6 PM

Thu May 11 (828)	Sun May 14 (829)	Tue May 16 (830)	Thu May 18 (831)
106	110	113	115
115	118 (s)	118 (s)	121 (s)
119	121 (s)	121 (s)	130 (s)
123 (s)	124 (s)	122 (s)	
120 (s)		130 (s)	
124			

Rest Week (832)

FIG. 8

Aretech LLC - Exhibit 1028, Page 00032

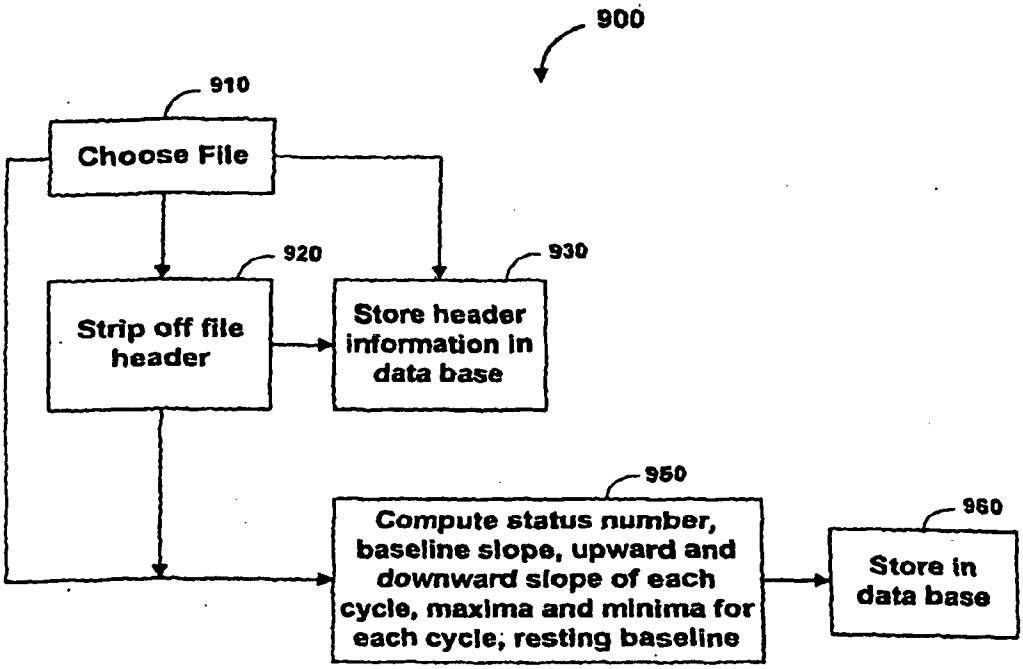
900
910
Choose File
920
Strip off file header
930
Store header information in data base
950
Compute status number, baseline slope, upward and downward slope of each cycle, maxima and minima for each cycle; resting baseline
960
Store in data base

FIG. 9

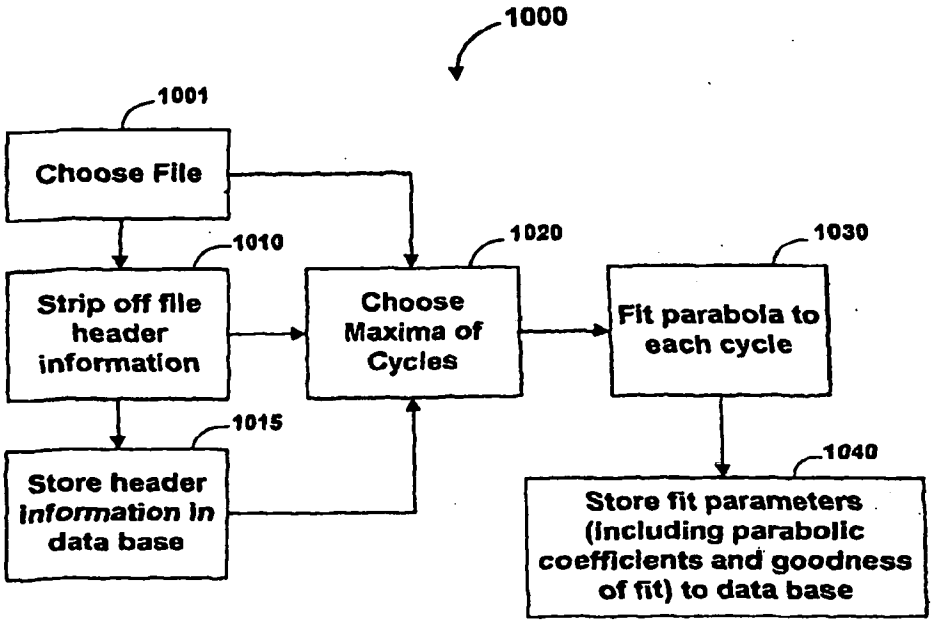
1000
1001
Choose File
1010
Strip off file header information
1015
Store header information in data base
1020
Choose Maxima of Cycles
1030
Fit parabola to each cycle
1040
Store fit parameters (including parabolic coefficients and goodness of fit) to data base

FIG. 10

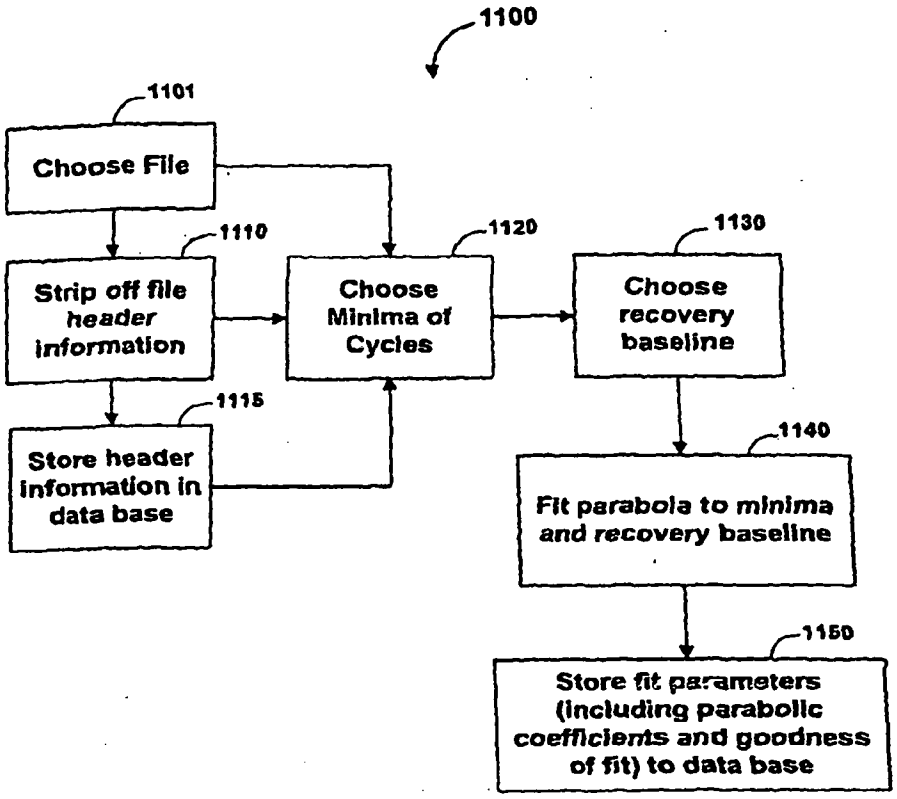
1100
1101
Choose File
1110
Strip off file header information
1115
Store header information in data base
1120
Choose Minima of Cycles
1130
Choose recovery baseline
1140
Fit parabola to minima and recovery baseline
1150
Store fit parameters (including parabolic coefficients and goodness of fit) to data base

FIG. 11

REFERENCES CITED IN THE DESCRIPTION

This list of references cited by the applicant is for the reader's convenience only. It does not form part of the European patent document. Even though great care has been taken in compiling the references, errors or omissions cannot be excluded and the EPO disclaims all liability in this regard.

Patent documents cited in the description

- US 5007430 A **[0004] [0079]**
- US 5800737 A **[0004] [0079]**
- US 5163439 A **[0004] [0079]**
- US 5752521 A **[0004] [0079]**