US008417061B2

(12) **United States Patent**
**Kennedy et al.**

(10) **Patent No.: US 8,417,061 B2**
(45) **Date of Patent: Apr. 9, 2013**

(54) **METHODS AND SYSTEMS FOR PROVISIONING ENERGY SYSTEMS**

(75) Inventors: **Daniel Ian Kennedy**, Berkeley, CA (US); **Adam Pryor**, Paddington NSW (AU); **Andrew Birch**, Ourca, CA (US)

(73) Assignee: **Sungevity Inc.**, Oakland, CA (US)

( * ) Notice: Subject to any disclaimer, the term of this patent is extended or adjusted under 35 U.S.C. 154(b) by 925 days.

(21) Appl. No.: **12/364,506**

(22) Filed: **Feb. 2, 2009**

(65) **Prior Publication Data**

US 2009/0304227 A1 Dec. 10, 2009

**Related U.S. Application Data**

(60) Provisional application No. 61/025,431, filed on Feb. 1, 2008, provisional application No. 61/047,086, filed on Apr. 22, 2008.

(51) **Int. Cl.**
*G06K 9/32* (2006.01)

(52) **U.S. Cl.** ..... **382/286**; 382/282; 382/291; 382/307; 703/1; 703/2

(58) **Field of Classification Search** ..... 382/282, 382/291, 307; 703/1, 2
See application file for complete search history.

(56) **References Cited**

U.S. PATENT DOCUMENTS

| | | | | |
|---|---|---|---|---|
| 6,047,274 | A | 4/2000 | Johnson | |
| 6,546,535 | B1 | 4/2003 | Nagao | |
| 6,549,200 | B1 | 4/2003 | Mortlock | |
| 6,875,914 | B2 | 4/2005 | Guha | |
| 7,133,551 | B2 * | 11/2006 | Chen et al. | 382/154 |
| 7,238,879 | B2 | 7/2007 | Matsushita | |
| 7,303,788 | B2 | 12/2007 | Kataoka | |
| 7,324,666 | B2 * | 1/2008 | Zoken et al. | 382/113 |
| 7,343,268 | B2 * | 3/2008 | Kishikawa | 703/1 |
| 7,529,794 | B2 * | 5/2009 | Dorai et al. | 709/204 |
| 7,534,956 | B2 | 5/2009 | Kataoka | |
| 7,733,342 | B2 * | 6/2010 | Kim et al. | 345/426 |

(Continued)

FOREIGN PATENT DOCUMENTS

| | | |
|---|---|---|
| JP | 2001209680 | 8/2001 |
| JP | 2001229262 | 8/2001 |
| WO | WO-2007127864 A2 | 8/2007 |

OTHER PUBLICATIONS

Olivier Faugeras and Quang-Tuan Luong, "The Geometry of Multiple Images", book, 2001, pp. 8,9,388,389,578,579, Massachusetts Institute of Technology, USA.

(Continued)

*Primary Examiner* — Yosef Kassa
(74) *Attorney, Agent, or Firm* — Patrick M. Reilly

(57) **ABSTRACT**

The invention provides consumers, private enterprises, government agencies, contractors and third party vendors with tools and resources for gathering site specific information related to purchase and installation of energy systems. A system according to one embodiment of the invention remotely determines the measurements of a roof. An exemplary system comprises a computer including an input means, a display means and a working memory. An aerial image file database contains a plurality of aerial images of roofs of buildings in a selected region. A roof estimating software program receives location information of a building in the selected region and then presents the aerial image files showing roof sections of building located at the location information. Some embodiments of the system include a sizing tool for determining the size, geometry, and pitch of the roof sections of a building being displayed.

**4 Claims, 19 Drawing Sheets**

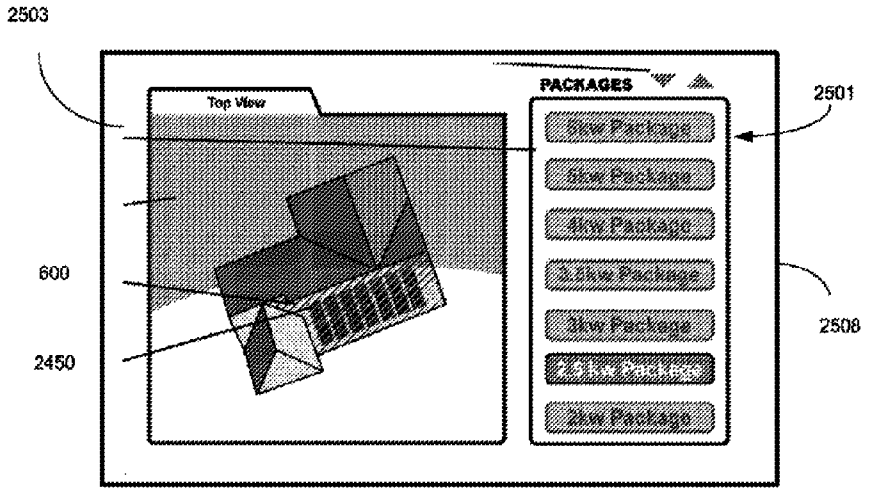


Eagle View EX2013
Roofr v. Eagle View
IPR2023-00437

U.S. PATENT DOCUMENTS

| | | | | |
|---|---|---|---|---|
| 7,749,351 | B2 | 7/2010 | Kataoka | |
| 7,787,659 | B2 * | 8/2010 | Schultz et al. | 382/106 |
| 7,844,499 | B2 | 11/2010 | Yahiro | |
| 7,873,239 | B2 * | 1/2011 | Yamaai | 382/289 |
| 7,991,226 | B2 * | 8/2011 | Schultz et al. | 382/167 |
| 8,078,436 | B2 * | 12/2011 | Pershing et al. | 703/2 |
| 2004/0153371 | A1 | 8/2004 | Razumov | |
| 2006/0061566 | A1 | 3/2006 | Verma | |
| 2006/0265287 | A1 | 11/2006 | Kubo | |
| 2007/0150198 | A1 | 6/2007 | MacDonald | |
| 2007/0150366 | A1 | 6/2007 | Yahiro | |
| 2008/0262789 | A1 | 10/2008 | Pershing | |
| 2009/0132436 | A1 | 5/2009 | Pershing | |
| 2009/0234692 | A1 | 9/2009 | Powell | |
| 2010/0110074 | A1 | 5/2010 | Pershing | |
| 2010/0114537 | A1 | 5/2010 | Pershing | |
| 2010/0217724 | A1 | 8/2010 | Wayne | |
| 2011/0016017 | A1 | 1/2011 | Carlin | |
| 2011/0047048 | A1 | 2/2011 | Yahiro | |

OTHER PUBLICATIONS

Oliver Faugeras "The Geometry of Multiple Images" 2001 United States ISBN 0-262-06220-8.

Bartesaghi, Alberto, Three-dimensional shape rendering from multiple images, Graphical Models 2005 pp. 1-15, Elsevier, online at www.science direct.com.

Hudson, Thomas R., 'Merging VRML Models: Extending the Use of Photomodeller' Mar. 23, 1998, Thesis, School of Engineering and Applied Science, University of Virginia.

* cited by examiner

FIG. 1

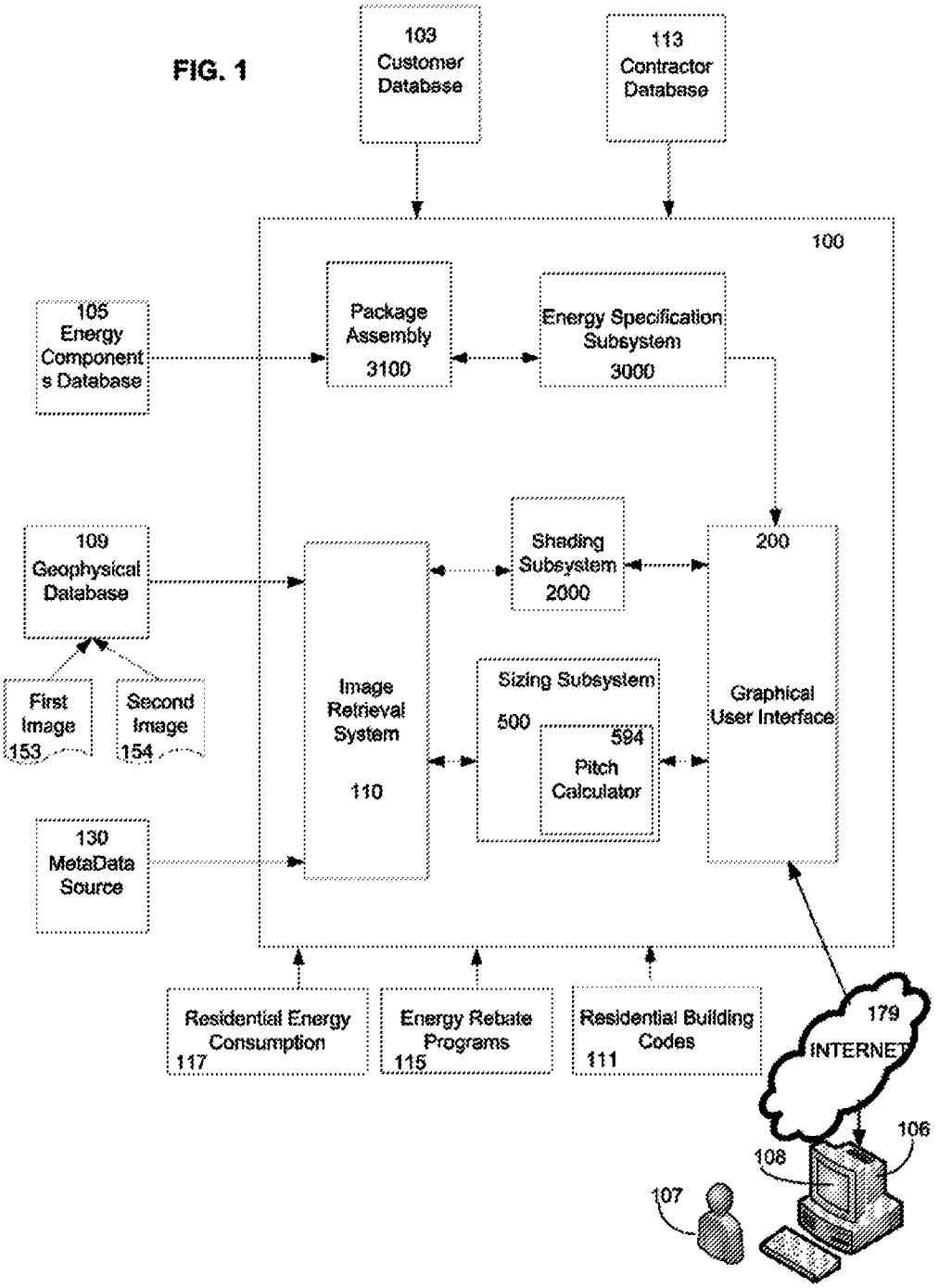
103
Customer
Database
113
Contractor
Database
100
105
Energy
Component
s Database
Package
Assembly
3100
Energy Specification
Subsystem
3000
109
Geophysical
Database
Shading
Subsystem
2000
200
First
Image
153
Second
Image
154
Image
Retrieval
System
110
Sizing Subsystem
500
594
Pitch
Calculator
Graphical
User Interface
130
MetaData
Source
Residential Energy
Consumption
117
Energy Rebate
Programs
115
Residential Building
Codes
111
179
INTERNET
106
108
107

FIG. 2

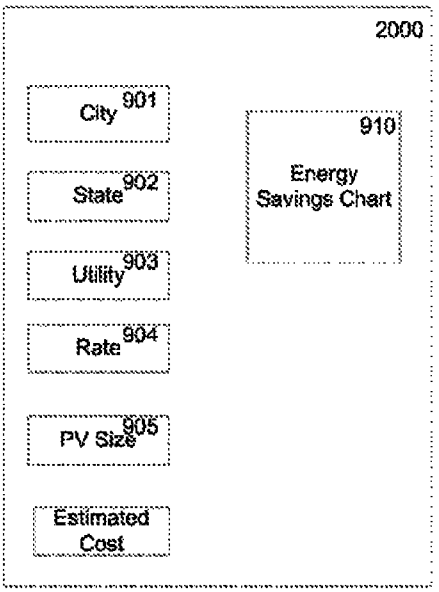


FIG.3

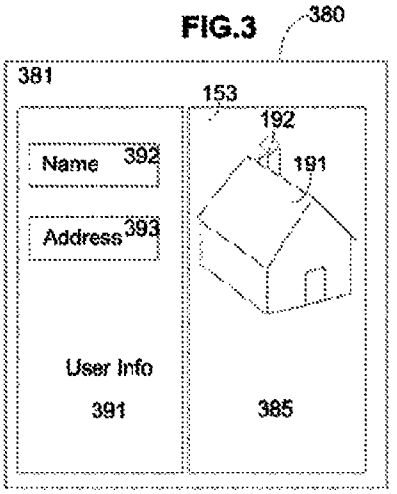


FIG.4

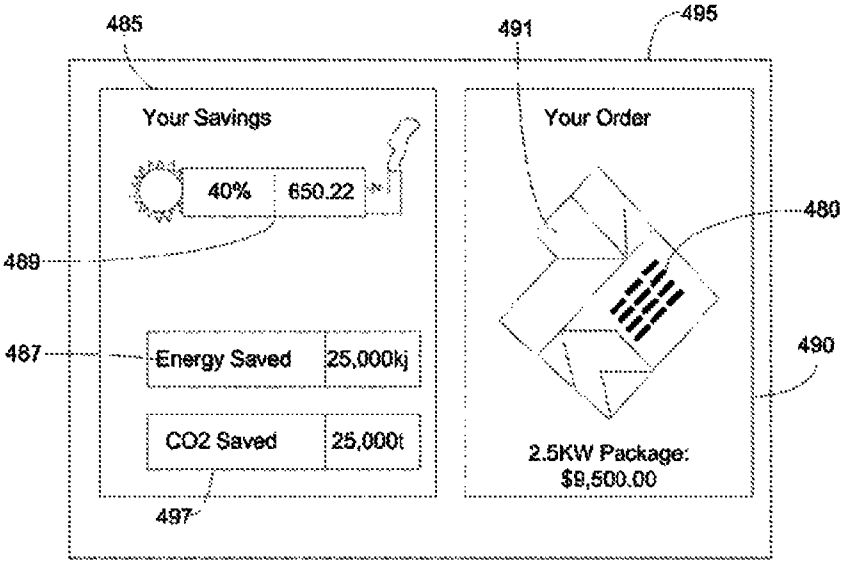

FIG. 5

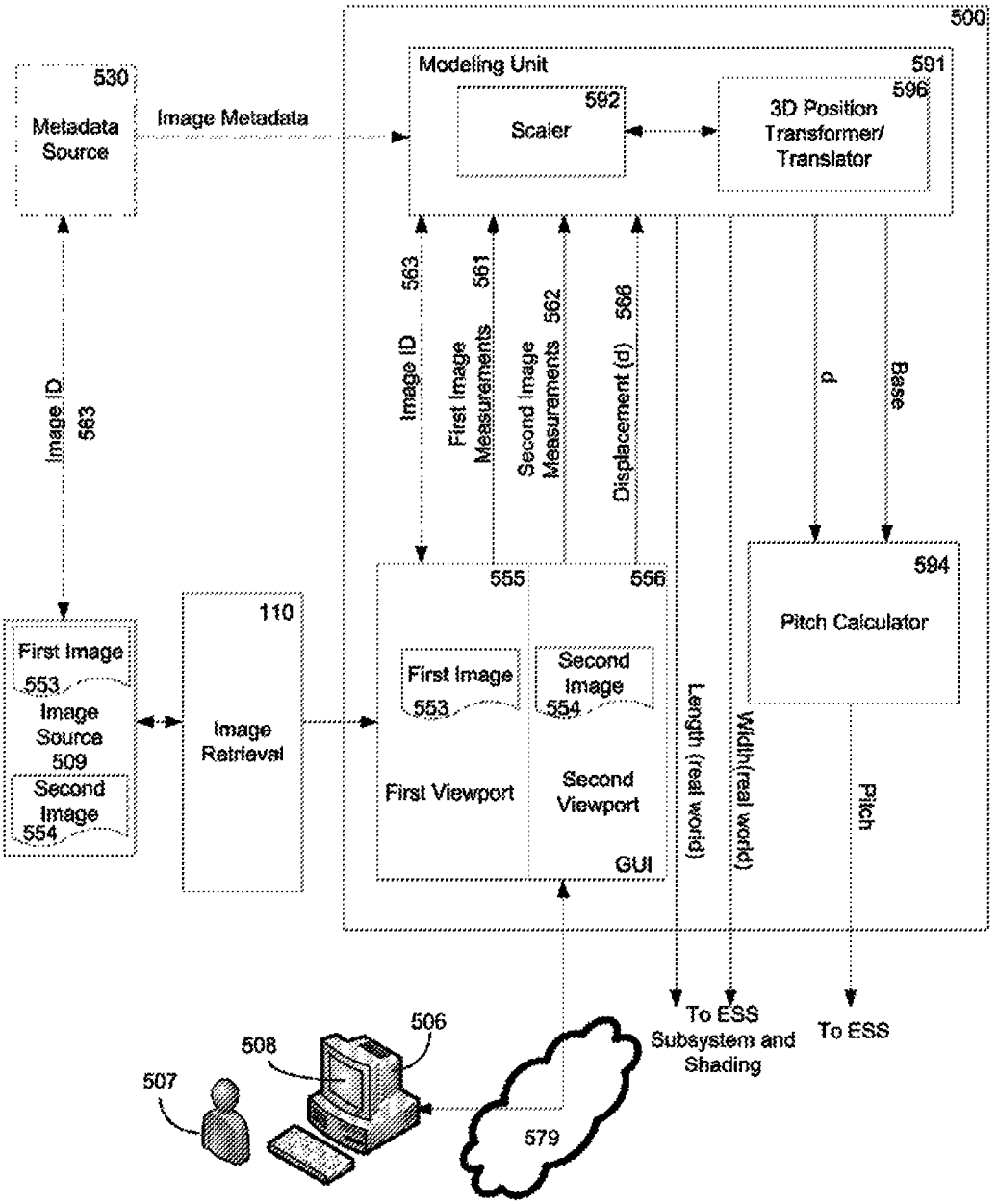
500
530
Metadata Source
Image Metadata
Modeling Unit
591
592
Scaler
596
3D Position Transformer/ Translator
Image ID
563
First Image Measurements
561
Second Image Measurements
562
Displacement (d)
566
d
Base
555
556
594
Pitch Calculator
110
First Image
553
Image Source
509
Second Image
554
Image Retrieval
First Image
553
Second Image
554
First Viewport
Second Viewport
GUI
Length (real world)
Width (real world)
Pitch
To ESS Subsystem and Shading
To ESS
506
508
507
579

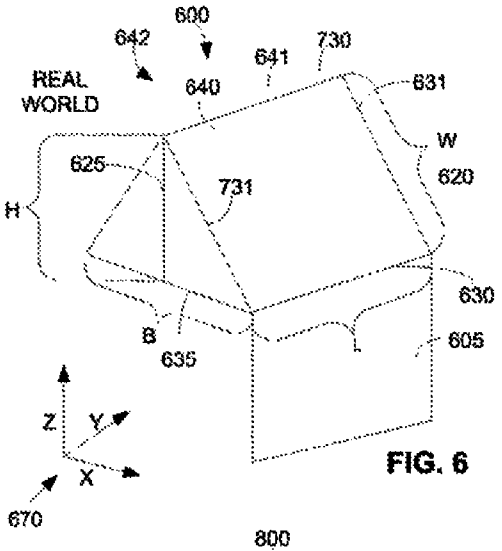


FIG. 6

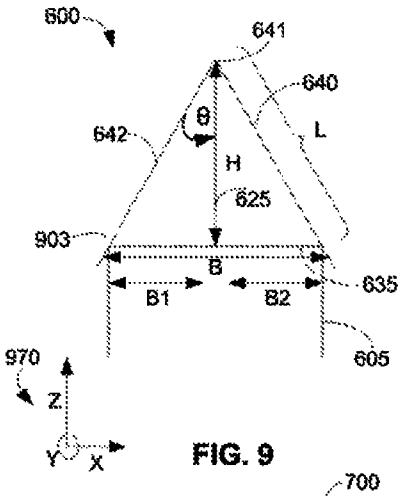


FIG. 9

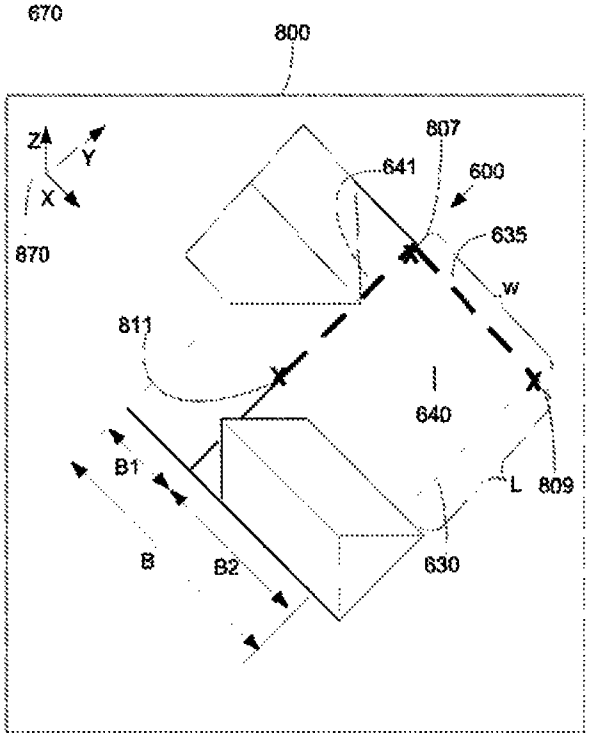


FIG. 8

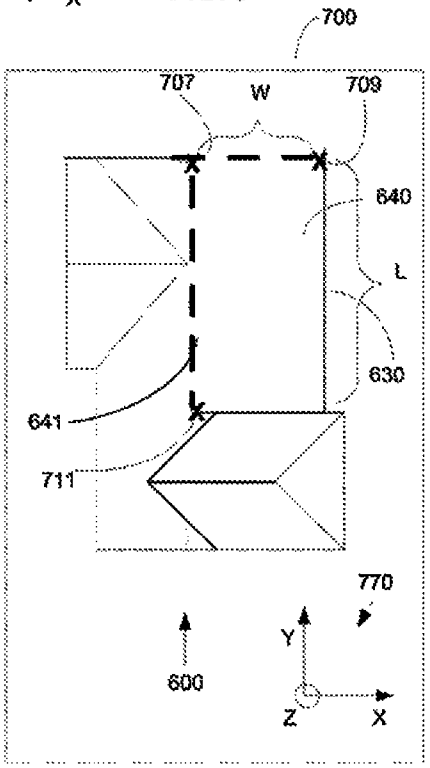


FIG. 7

FIG. 10

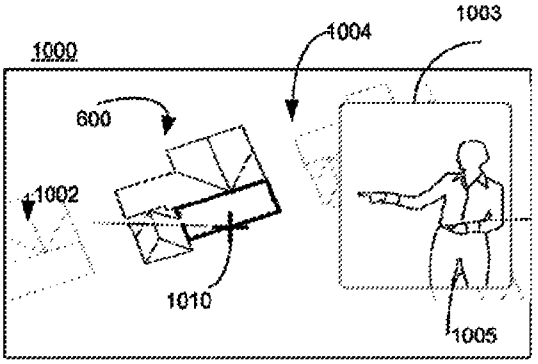


FIG. 11

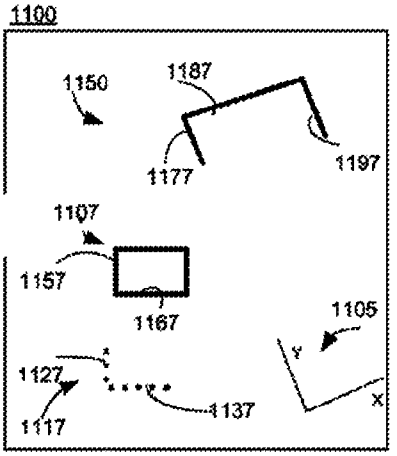


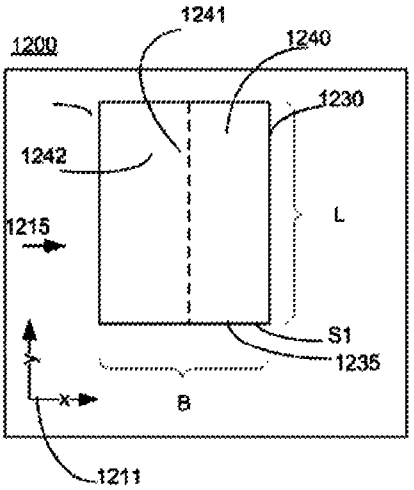


FIG. 12

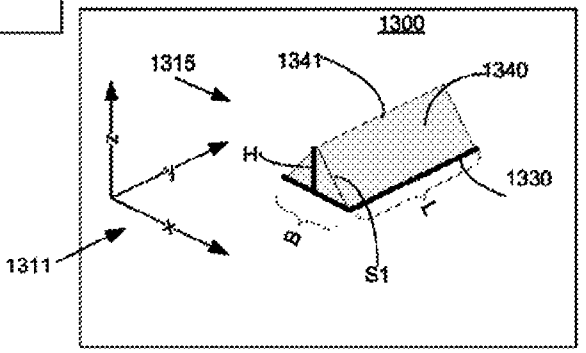


FIG. 13

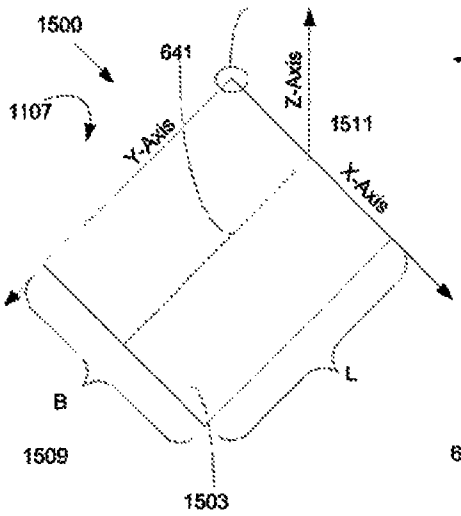


FIG. 15

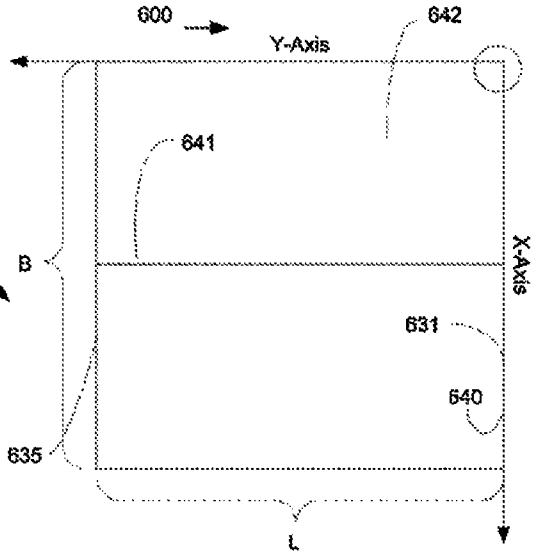


FIG. 14

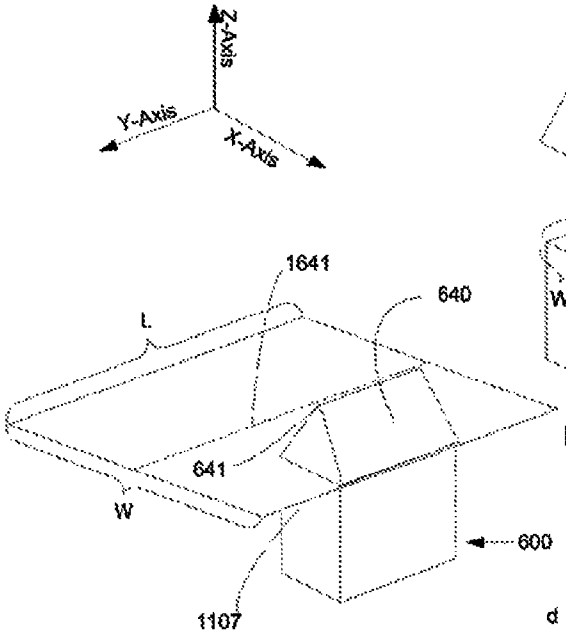


FIG. 16

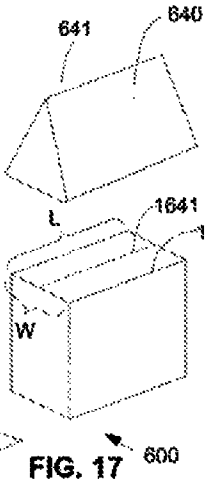


FIG. 17

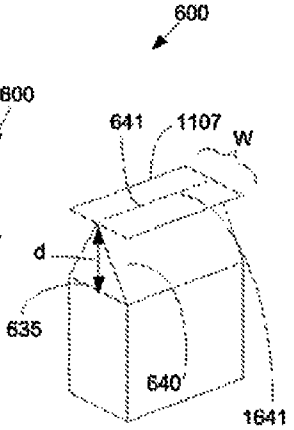


FIG. 18

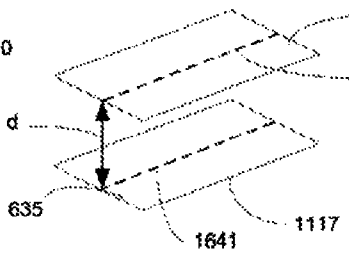


FIG. 19

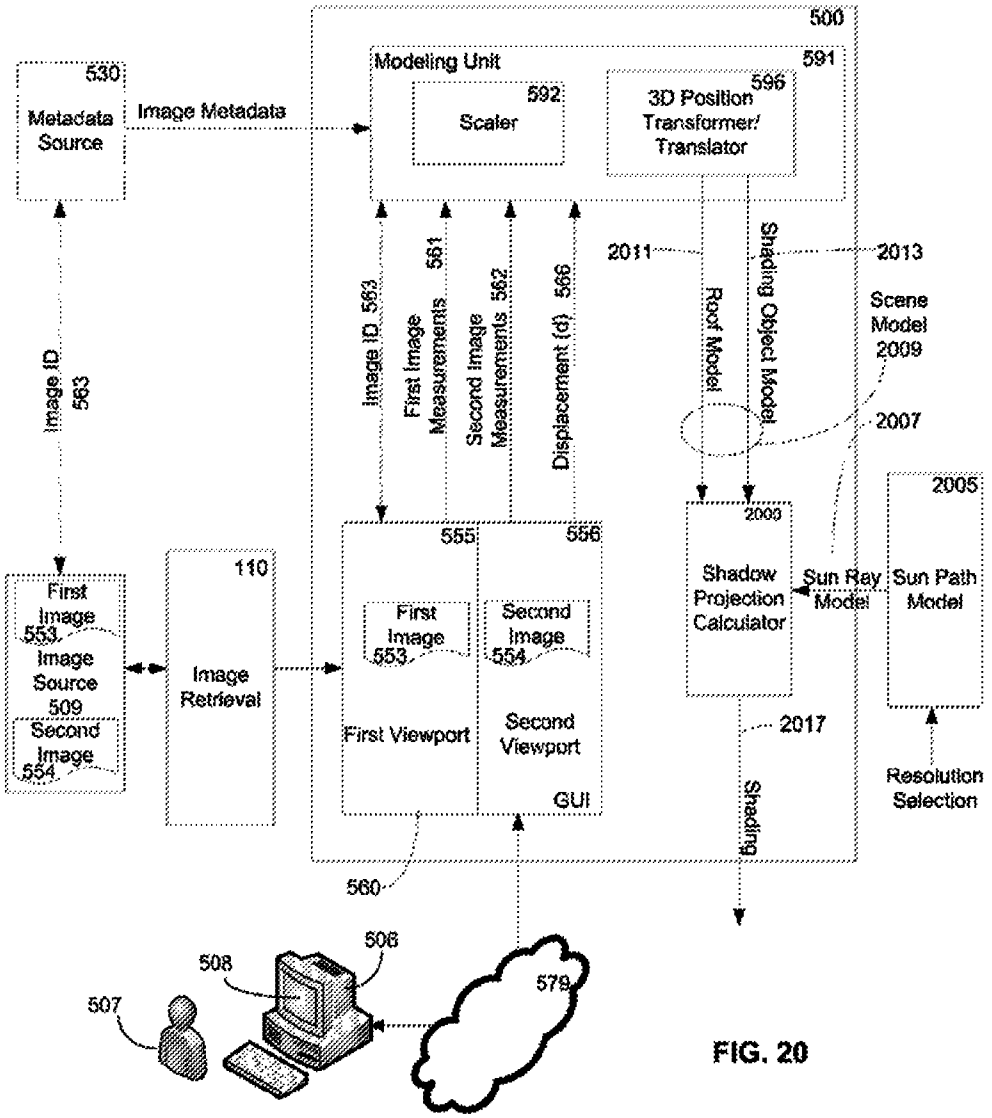
500
Modeling Unit
591
530
Metadata Source
Image Metadata
592
Scaler
596
3D Position Transformer/ Translator
Image ID 563
Image ID 563
First Image Measurements 561
Second Image Measurements 562
Displacement (d) 566
2011
Roof Model
Shading Object Model
2013
Scene Model 2009
2007
2005
2000
Shadow Projection Calculator
Sun Ray Model
Sun Path Model
555
556
110
First Image 553
Image Source 509
Second Image 554
Image Retrieval
First Image 553
Second Image 554
First Viewport
Second Viewport
GUI
2017
Shading
Resolution Selection
560
508
506
507
578

FIG. 20

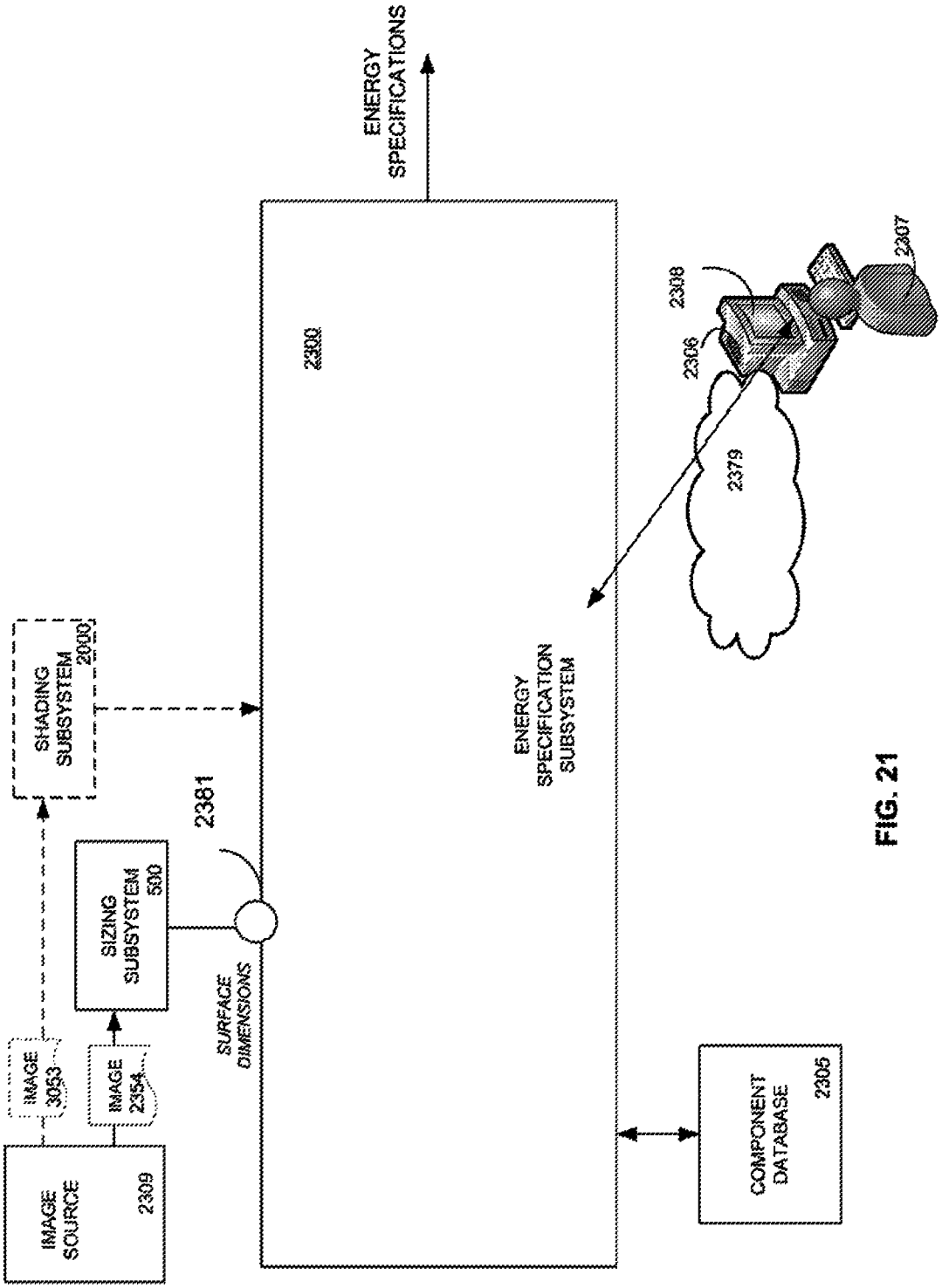
ENERGY SPECIFICATIONS
2300
2308
2306
2307
2379
SHADING SUBSYSTEM 2000
2381
ENERGY SPECIFICATION SUBSYSTEM
SIZING SUBSYSTEM 500
SURFACE DIMENSIONS
IMAGE 3053
IMAGE 2354
IMAGE SOURCE 2309
COMPONENT DATABASE 2305

FIG. 21

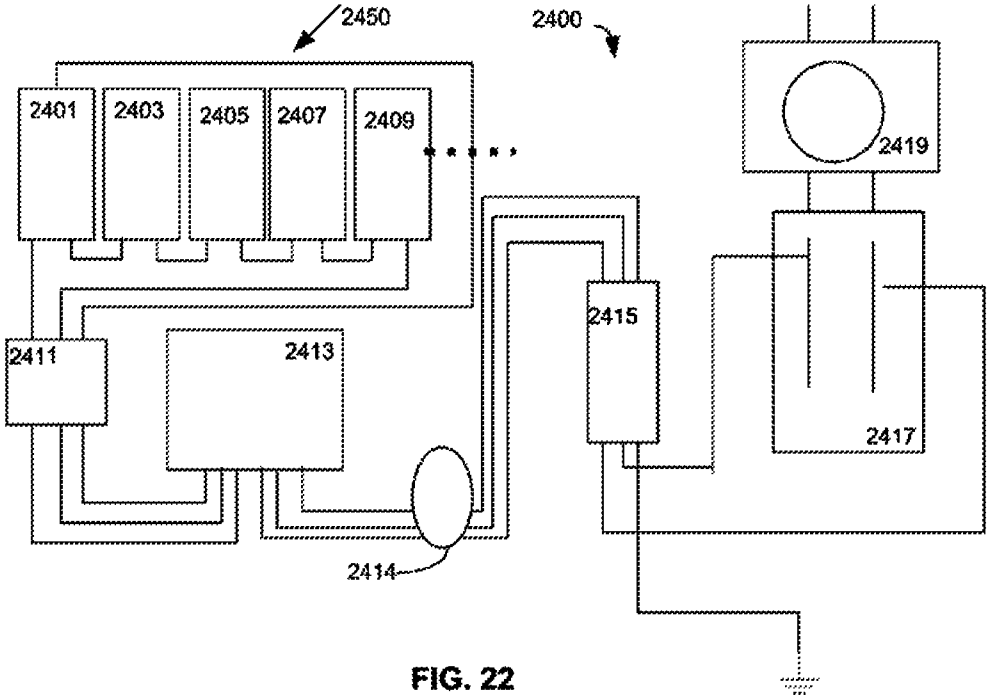
2450
2400
2401
2403
2405
2407
2409
2419
2415
2411
2413
2417
2414

FIG. 22

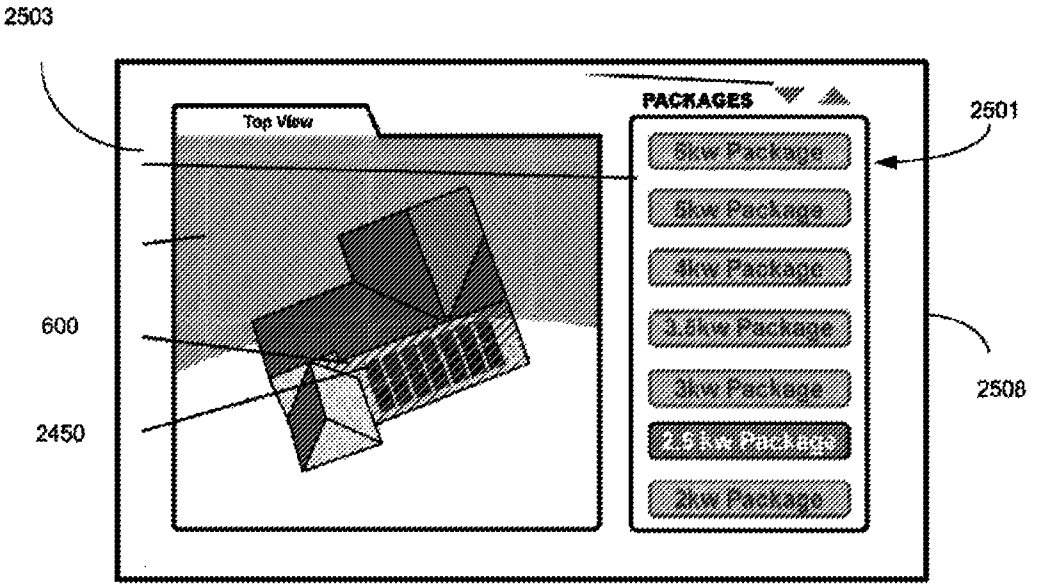
2503
Top View
PACKAGES
2501
5kw Package
5kw Package
4kw Package
3.5kw Package
3kw Package
2.5 kw Package
2kw Package
600
2450
2508

FIG. 23

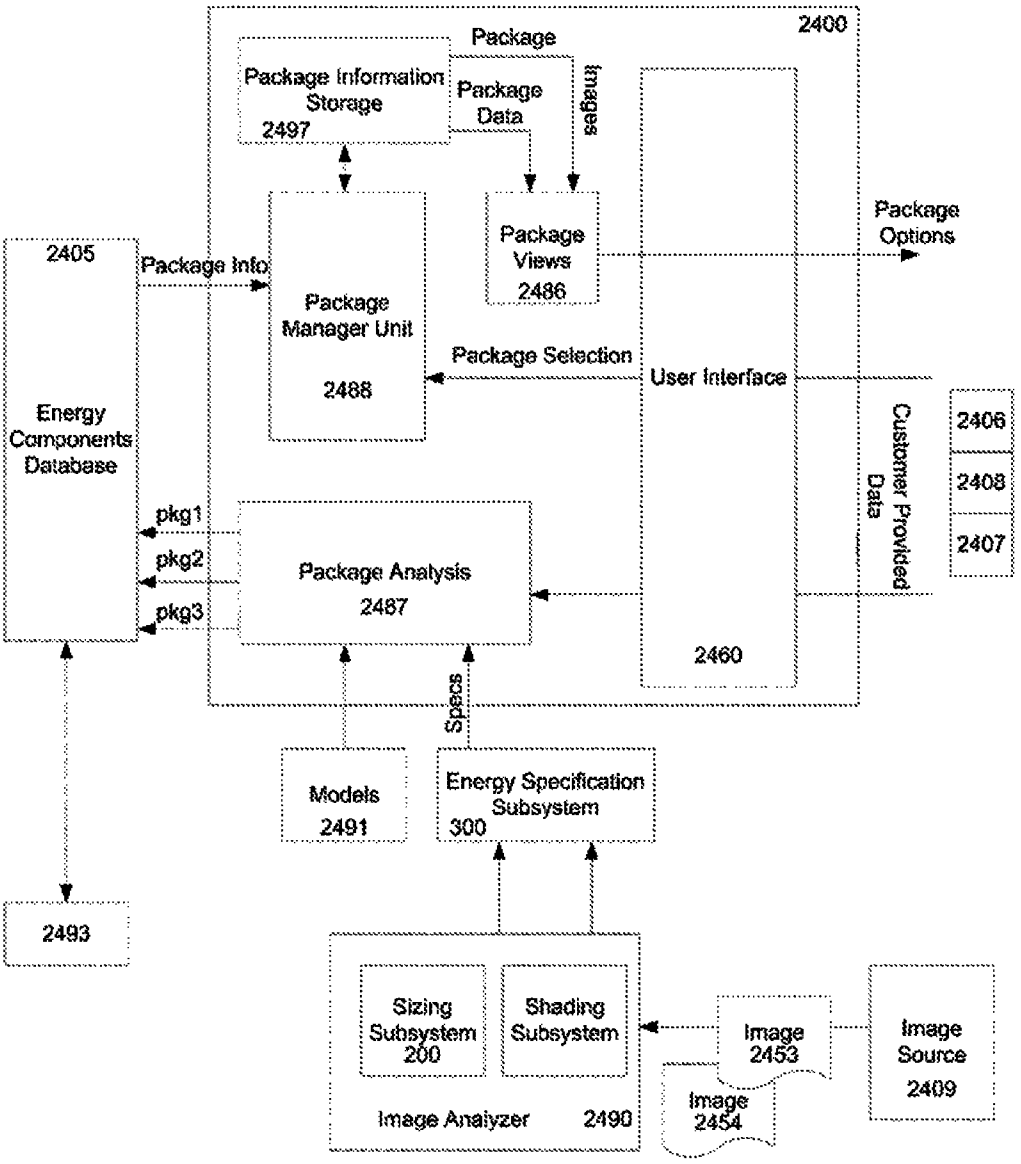
2400
Package
Package Information Storage
2497
Package Data
Images
Package Views
2486
Package Options
2405
Package Info
Package Manager Unit
2488
Package Selection
User Interface
Energy Components Database
Customer Provided Data
2406
2408
2407
pkg1
pkg2
pkg3
Package Analysis
2487
2460
Specs
Models
2491
Energy Specification Subsystem
300
2493
Sizing Subsystem
200
Shading Subsystem
Image
2453
Image Source
2409
Image
2454
Image Analyzer
2490

FIG. 24

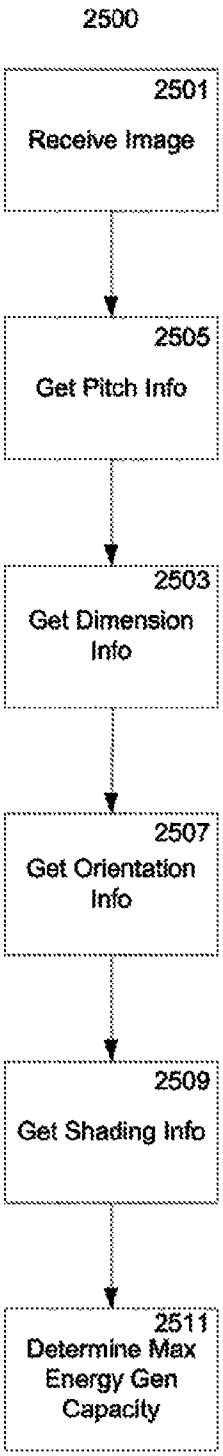
2500
2501
Receive Image
2505
Get Pitch Info
2503
Get Dimension Info
2507
Get Orientation Info
2509
Get Shading Info
2511
Determine Max Energy Gen Capacity

FIG. 25

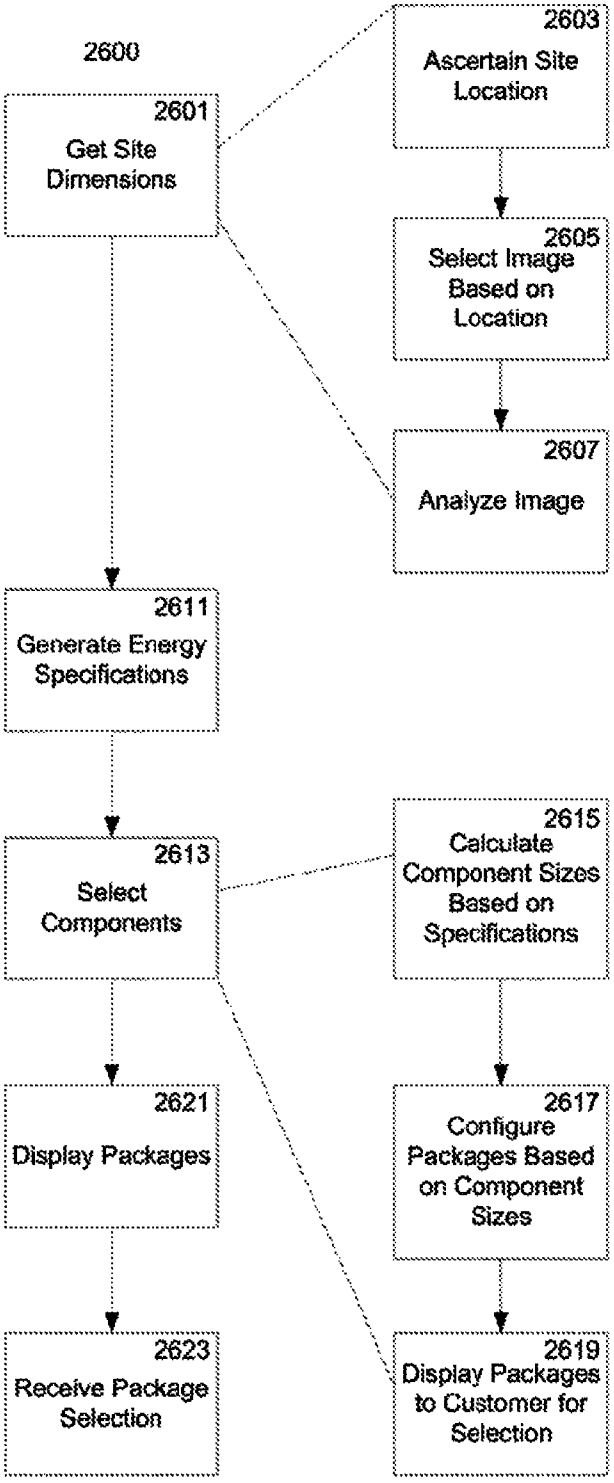
2600
2601
Get Site Dimensions
2603
Ascertain Site Location
2605
Select Image Based on Location
2607
Analyze Image
2611
Generate Energy Specifications
2613
Select Components
2615
Calculate Component Sizes Based on Specifications
2617
Configure Packages Based on Component Sizes
2619
Display Packages to Customer for Selection
2621
Display Packages
2623
Receive Package Selection

FIG. 26

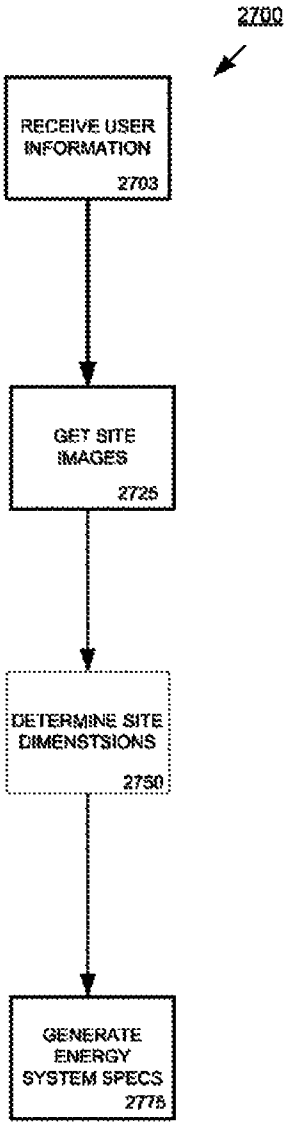


FIG. 27

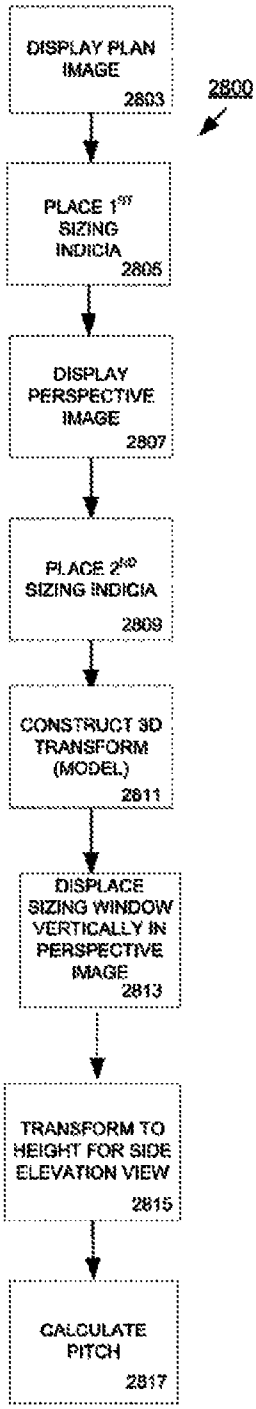


FIG. 28

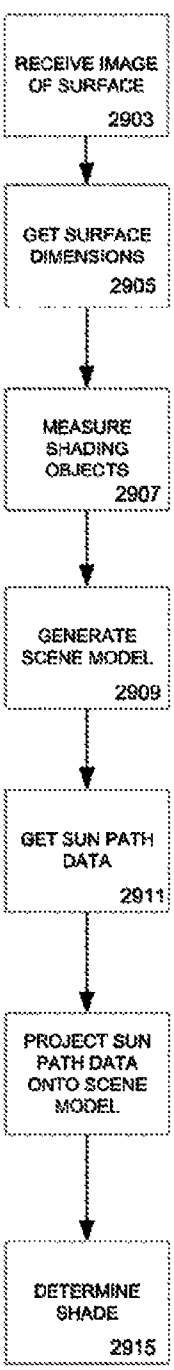


FIG. 29

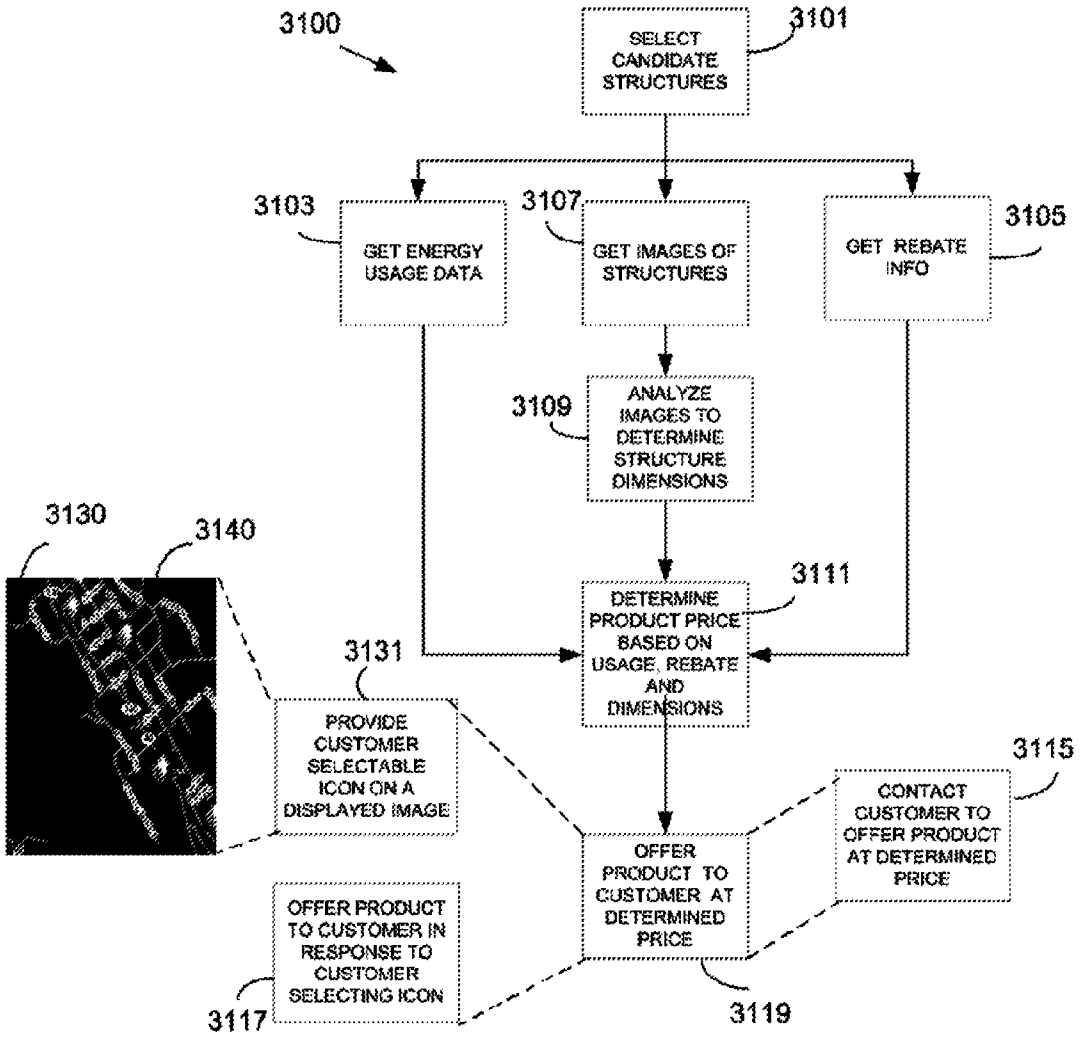
3100
SELECT CANDIDATE STRUCTURES
3101
3103
GET ENERGY USAGE DATA
3107
GET IMAGES OF STRUCTURES
GET REBATE INFO
3105
3109
ANALYZE IMAGES TO DETERMINE STRUCTURE DIMENSIONS
3130
3140
3111
DETERMINE PRODUCT PRICE BASED ON USAGE, REBATE AND DIMENSIONS
3131
PROVIDE CUSTOMER SELECTABLE ICON ON A DISPLAYED IMAGE
3115
CONTACT CUSTOMER TO OFFER PRODUCT AT DETERMINED PRICE
OFFER PRODUCT TO CUSTOMER AT DETERMINED PRICE
OFFER PRODUCT TO CUSTOMER IN RESPONSE TO CUSTOMER SELECTING ICON
3117
3119

FIG. 30

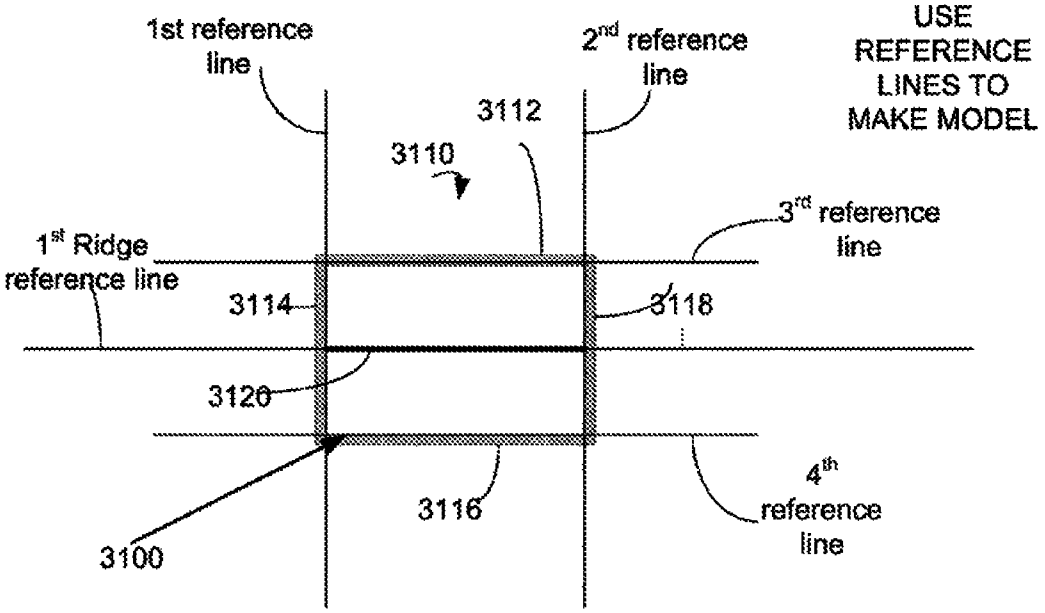
1st reference line
2nd reference line
USE REFERENCE LINES TO MAKE MODEL
3112
3110
3rd reference line
1st Ridge reference line
3114
3118
3120
4th reference line
3116
3100

FIG.32

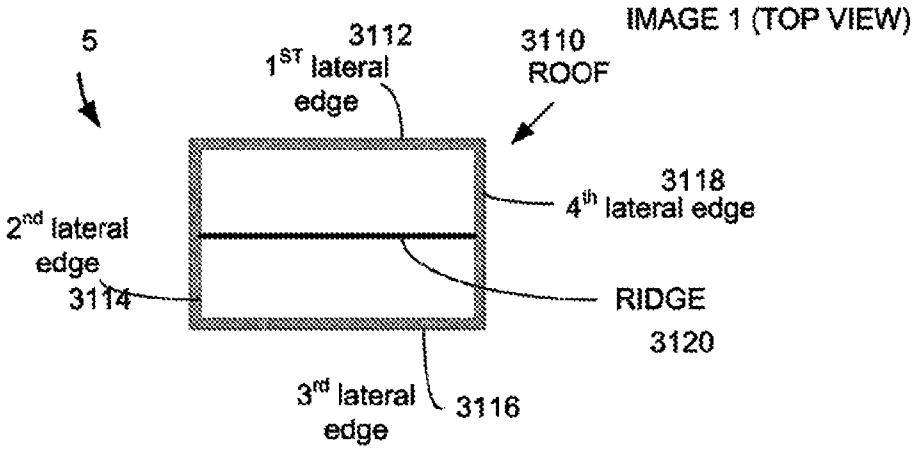
IMAGE 1 (TOP VIEW)
5
3112
1ST lateral edge
3110
ROOF
3118
4th lateral edge
2nd lateral edge
3114
RIDGE
3120
3rd lateral edge
3116

FIG. 31

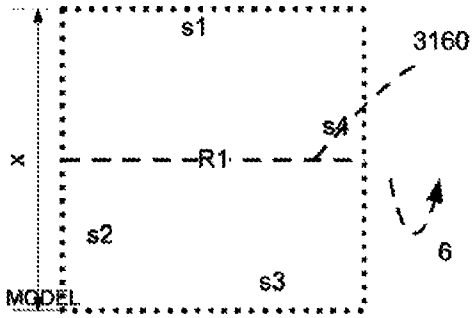
s1
3160
s4
x
R1
s2
6
s3
MODEL

FIG. 33

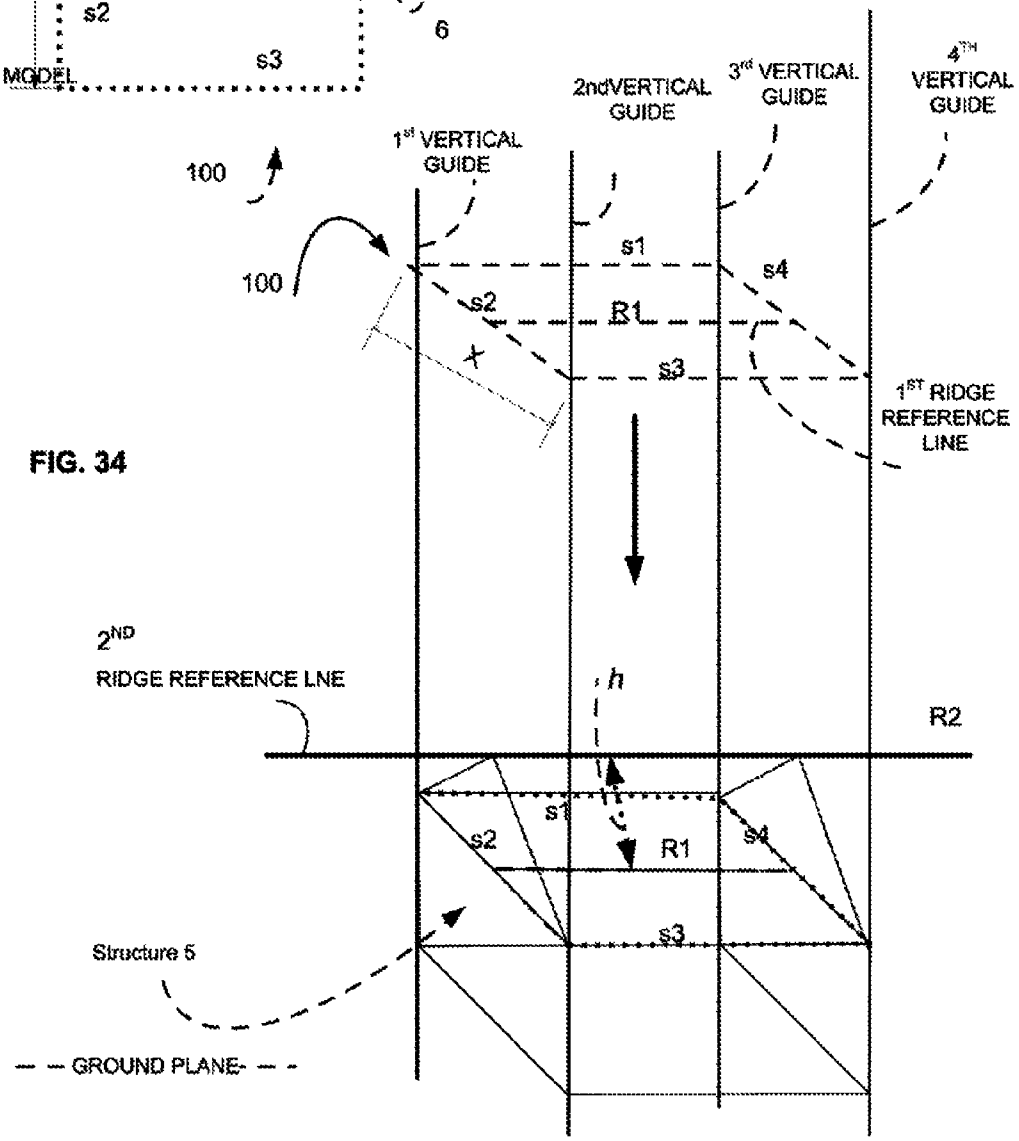
2ndVERTICAL GUIDE
3rd VERTICAL GUIDE
4TH VERTICAL GUIDE
1st VERTICAL GUIDE
100
100
s1
s4
s2
R1
x
s3
1ST RIDGE REFERENCE LINE
2ND RIDGE REFERENCE LNE
h
R2
s1
s2
R1
s4
s3
Structure 5
GROUND PLANE

FIG. 34

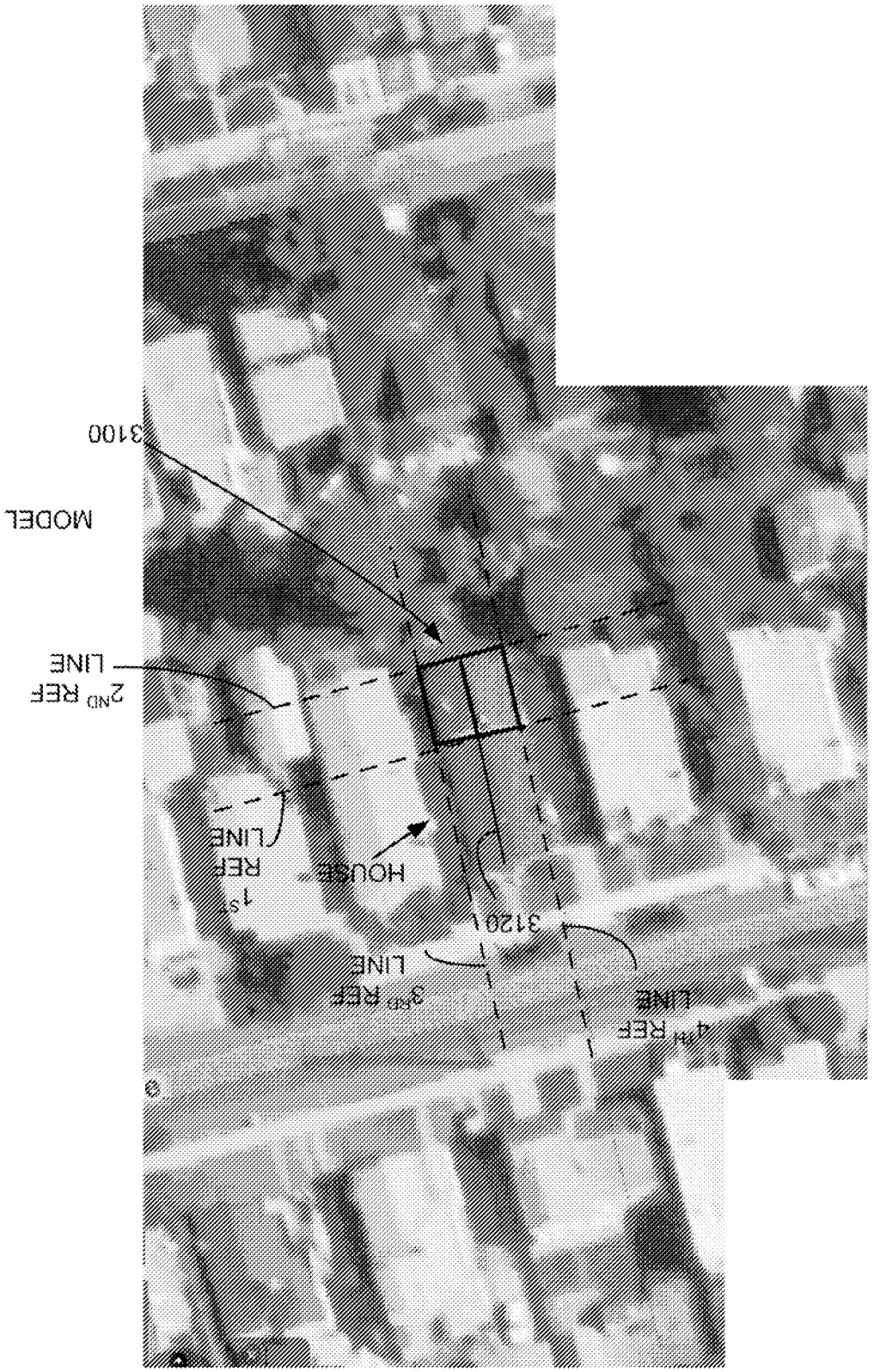
4TH REF LINE
3RD REF LINE
3120
1ST REF LINE
HOUSE
2ND REF LINE
3100
MODEL

FIG. 35

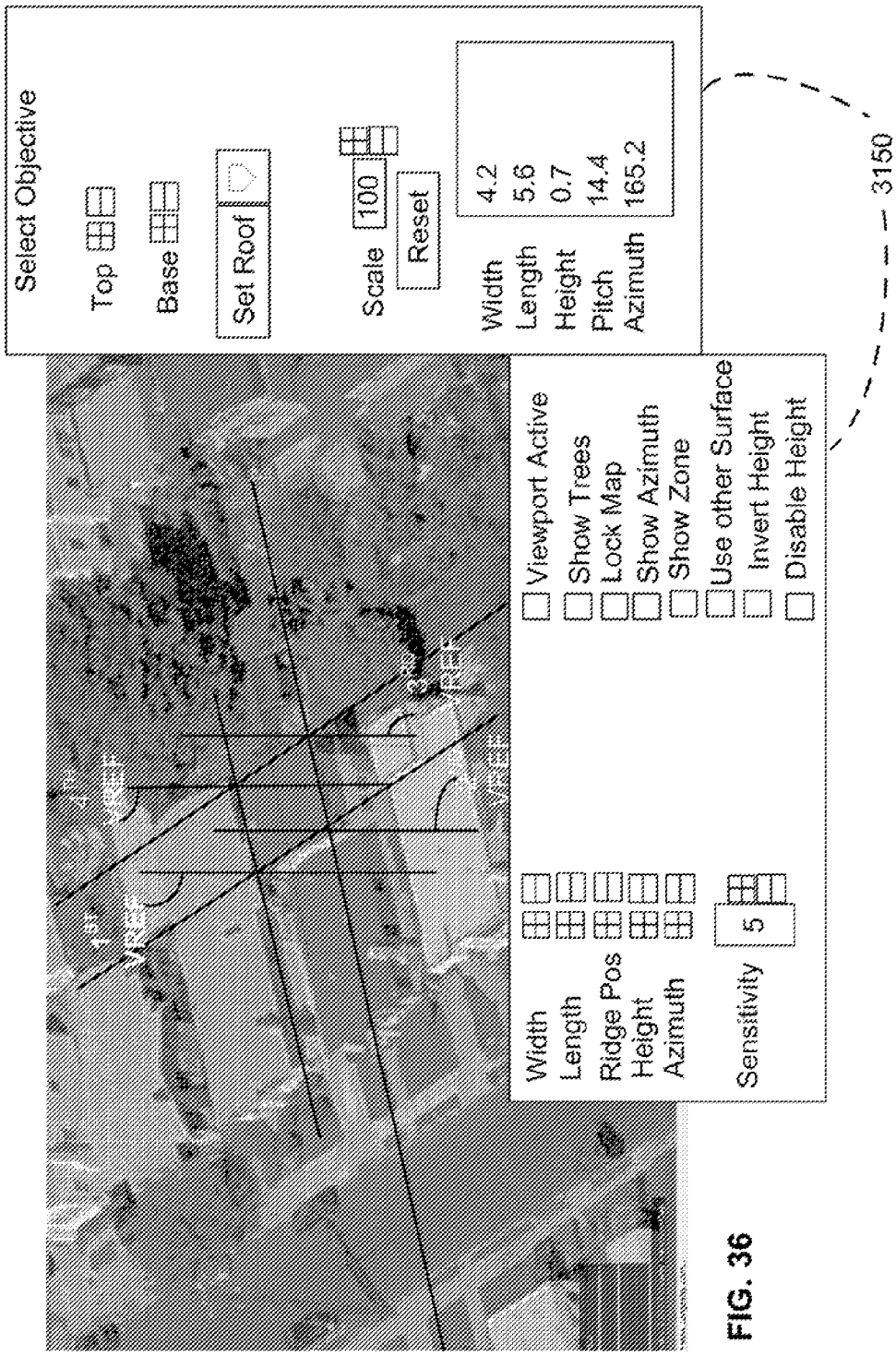
Select Objective
Top
Base
Set Roof
Scale
100
Reset
Width
Length
Height
Pitch
Azimuth
4.2
5.6
0.7
14.4
165.2
3150
Viewport Active
Show Trees
Lock Map
Show Azimuth
Show Zone
Use other Surface
Invert Height
Disable Height
Width
Length
Ridge Pos
Height
Azimuth
Sensitivity
5

FIG. 36

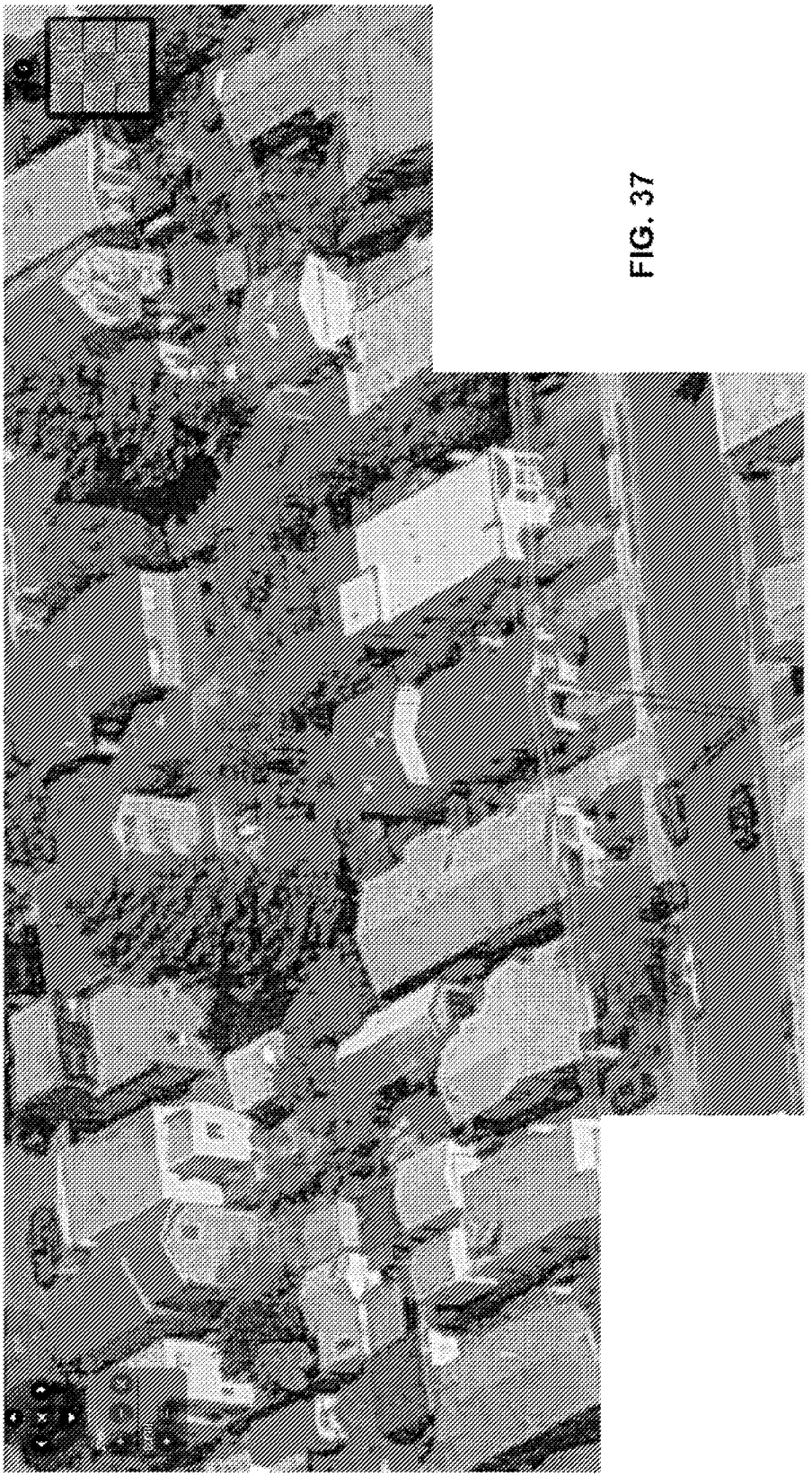

FIG. 37

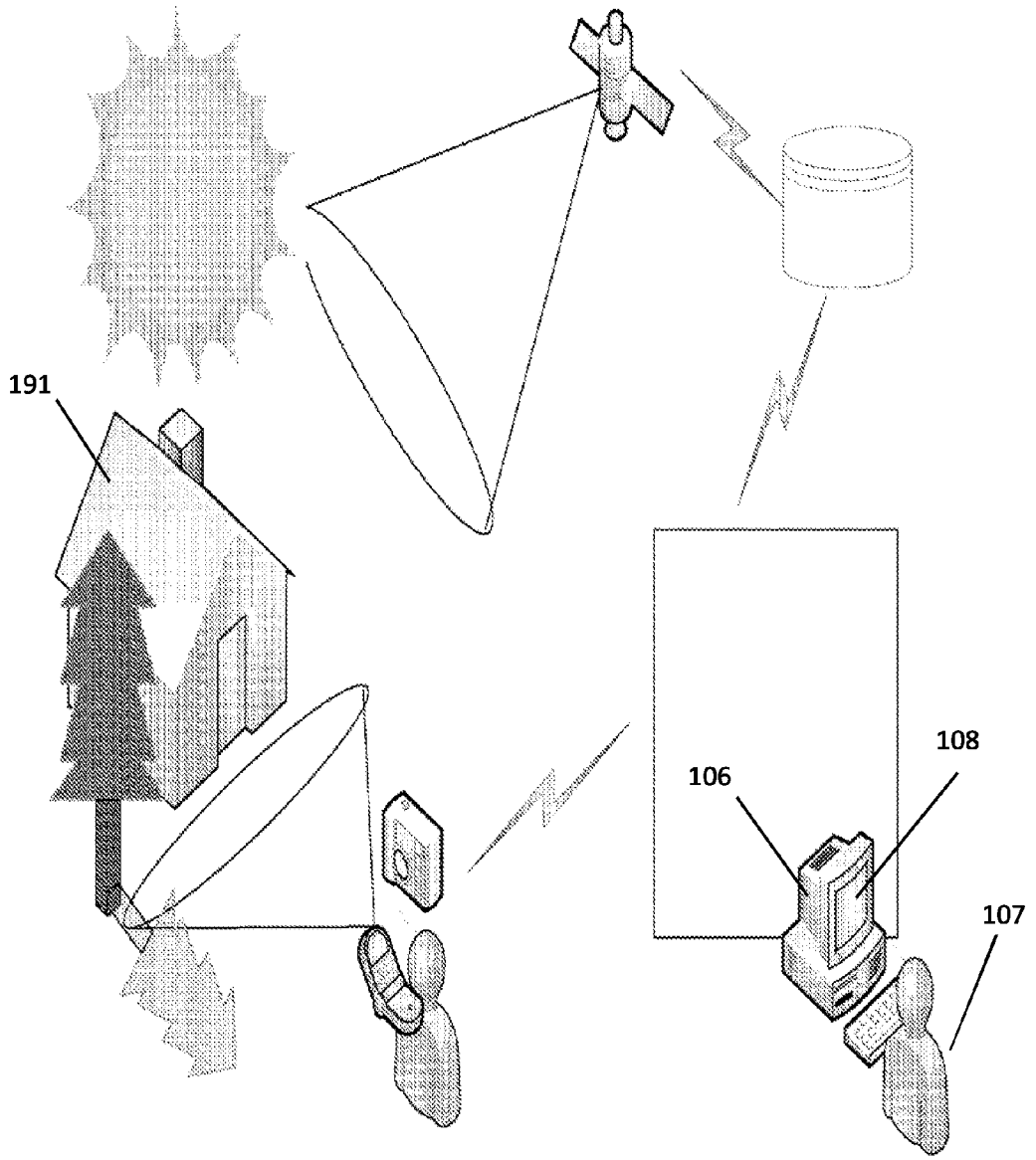


FIG. 38

# METHODS AND SYSTEMS FOR PROVISIONING ENERGY SYSTEMS

## CROSS REFERENCE TO RELATED APPLICATIONS

This application claims the benefit of filing date of U.S. provisional application Ser. No. 61/025,431 titled "System and Method for Sizing a Roof for Installation of Solar Panels", naming the same inventors and filed on Feb. 1, 2008 in the USPTO, the specification of which is incorporated herein, in its entirety, by reference. This application claims the benefit of PCT/US08/79003 filed Oct. 6, 2008 in the PCT receiving office of the USPTO, naming the same inventors, the specification of which is hereby incorporated herein, in its entirety, by reference. This application claims benefit of filing date of U.S. provisional application Ser. No. 61/047,086 titled Customer Relationship Management Module, Marketing Module, Quick Sizing filed on Apr. 22, 2008 in the USPTO, naming the same inventors, the specification of which is incorporated herein, in its entirety, by reference.

## FIELD OF THE INVENTION

The present invention relates generally to methods and systems for provisioning energy systems and in particular to methods and systems for provisioning solar energy systems.

## BACKGROUND OF THE INVENTION

Environmental and cost concerns associated with traditional energy systems are increasing in today's energy conscious society. Concerns about oil and natural gas prices, and environmental concerns highlighted by recent hurricanes and other natural disasters have focused attention on alternative energy sources and systems.

So called 'clean energy' offers much hope for alleviating today's energy concerns. For example, today's solar technologies provide significant economic and environmental advantages for homeowners. Deployment of solar technologies is widely encouraged through financial incentives offered by local, regional as well as federal energy rebate programs.

Yet, despite these advantages and incentives many homeowners remain reluctant to convert from conventional fuel based systems to advanced solar and other alternative energy technologies. Part of the reluctance stems from the time, expertise and cost associated with converting from a conventional energy system to an alternative energy system such as a solar energy system. The current marketplace does not offer consumers sufficient information about costs and benefits of energy systems to allow a potential purchaser to make an informed choice when considering alternative energy systems.

For example, sizing a homeowner's particular roof-space including all the relevant features of that particular roof space typically requires an on-site visit by a technician. Further, it is presently not possible to remotely evaluate shading issues or other local factors that might impact the performance of a particular system. Nor is it possible for potential purchasers to visualize a system as it would appear installed on the purchaser's actual roof. As a result, information available to a purchaser about engineering requirements, aesthetic results, cost and environmental impact of a system considered for purchase is limited.

What are needed are systems and methods that provide consumers, contractors, third party vendors and others with



convenient, comprehensive and site-specific information for use in provisioning a site with a solar energy system. Further needed are systems and methods that provide a potential purchaser with site specific information related to energy system costs, benefits and aesthetics of alternative energy systems.

## SUMMARY OF THE INVENTION

The invention provides consumers, private enterprises, government agencies, contractors and third party vendors with tools and resources for gathering site specific information related to purchase and installation of energy systems.

## DESCRIPTION OF THE DRAWING FIGURES

These and other objects, features and advantages of the invention will be apparent from a consideration of the following detailed description of the invention considered in conjunction with the drawing figures, in which:

FIG. **1** is a high level block diagram illustrating a system for provisioning energy systems according to an embodiment of the invention;

FIG. **2** illustrates a Graphical User Interface (GUI) for displaying energy system information to a user.

FIG. **3** is GUI enabling a user to provide address information for an installation site.

FIG. **4** illustrates a display screen providing a graphical indication of energy savings and an image of a solar energy system installed on a user specified installation surface according to one embodiment of the invention.

FIG. **5** is a block diagram of a sizing subsystem according to an embodiment of the invention.

FIG. **6** is a perspective view illustrating dimensions of an example roof selected for installation of an energy system.

FIG. **7** is a top plan viewport of a roof installation surface illustrating placement of measurement indicia on a roof image according to an embodiment of the invention.

FIG. **8** is a top plan viewport of the installation surface illustrated in FIG. **7** viewed in a different orientation and including measurement indicia according to an embodiment of the invention.

FIG. **9** is a side elevation view of a structure including an installation surface comprising a roof according to one embodiment of the invention.

FIG. **10** illustrates a viewport displaying an image of an installation surface according to an embodiment of the invention.

FIG. **11** is a viewport displaying a top plan view of an installation surface and including a measuring tool according to an embodiment of the invention.

FIG. **12** is a viewport displaying a top plan view of the measuring tool illustrated in FIG. **11**.

FIG. **13** is a perspective view of the roof illustrated in FIG. **11**.

FIG. **14** is a top plan view of the roof illustrated in FIG. **11**.

FIG. **15** is a perspective view of the measurement tool illustrated in FIG. **11**.

FIGS. **16-19** illustrate positioning of the measuring tool of FIG. **11** with respect to the roof illustrated in FIG. **11** for various orientations of a roof image.

FIG. **20** is a block diagram of a sizing unit configured to provide shading information for an installation surface according to an embodiment of the invention.

FIG. **21** is a block diagram of an energy specification subsystem according to an embodiment of the invention.

FIG. **22** is a block diagram of an example solar energy system including system components according to an embodiment of the invention.

FIG. **23** illustrates a display screen providing an image of a user selected installation surface including an installed energy system and providing information related to the installed energy system.

FIG. **24** is a block diagram of a quote subsystem according to an embodiment of the invention.

FIG. **25** is a flowchart illustrating steps of a method for providing energy system specifications according to an embodiment of the invention.

FIG. **26** is a flowchart illustrating steps of a method for configuring component packages according to an embodiment of the invention.

FIG. **27** is a flowchart illustrating steps of a method for generating energy system specifications according to an embodiment of the invention.

FIG. **28** is a flowchart illustrating steps of a method for determining pitch according to an embodiment of the invention.

FIG. **29** is a flowchart illustrating steps of a method for determining shading for an installation surface according to an embodiment of the invention.

FIG. **30** is a flowchart illustrating steps of a method for providing quotes for energy systems according to an embodiment of the invention.

FIG. **31** is a top plan view of a house including a roof to be sized.

FIG. **32** illustrates reference lines positioned with respect to the roof illustrated in FIG. **1** for generating a model of the roof in accordance with an embodiment of the invention.

FIG. **33** illustrates a model defined by positioning the reference lines illustrated in FIG. **32** in accordance with an embodiment of the invention.

FIG. **34** illustrates a perspective view of a structure including a roof to be sized and further illustrating translation and rotation of the model of FIG. **3** to align the model to the perspective view of the same roof in accordance with an embodiment of the invention.

FIG. **35** illustrates a top plan view of a roof to be sized as the roof appears in an image obtained from a geographical information service (GIS) and further illustrating reference lines for generating a model in accordance with an embodiment of the invention.

FIG. **36** is a perspective view of the roof of the image of FIG. **35** and illustrating vertical reference lines in accordance with an embodiment of the invention.

FIG. **37** is a second perspective view of the roof illustrated in FIGS. **35** and **36**.

FIG. **38** Illustrates an information network, transmitting image data of a structure from a satellite through a GIS (geographical information service) and/or land based cameras to a central computer terminal.

## DETAILED DESCRIPTION OF THE INVENTION—PROVISIONING SYSTEMS AND METHODS

Definitions

The term "PV cell" refers to a photovoltaic cell, also referred to as solar cell.

The terms "PV Module" and "solar panel" and 'solar tile' refer to various arrangements of interconnected assemblies of photovoltaic cells.

The term "PV Array" refers to a plurality of interconnected solar panels or tiles.

The term 'provisioning' refers to providing, supplying, equipping, installing, or preparing to provide, supply, equip or install energy systems and energy system components for delivering energy to a site.

FIG. **1** Provisioning System

FIG. **1** illustrates a provisioning system **100** according to an embodiment of the invention. System **100** and methods of the invention will find application in provisioning energy systems, for example, solar energy systems and other alternative energy systems. Solar energy systems include off-grid systems and grid tie systems. Off grid systems include standalone systems designed for homes, recreational vehicles, cabins, and backup and portable power applications. Systems and methods of the invention are also suitable for provisioning grid-tie systems. Further embodiments of the invention are suitable for provisioning hybrid off-grid systems, including systems integrating gasoline, propane or diesel generator power sources with other energy systems.

System **100** enables a user, for example user **107**, to undertake efficient, cost effective and accurate execution of numerous phases of an energy system provisioning processes without the need for visits to the site to be provisioned. For example system **100** provides a tool for measuring a user selected roof or other user-selected other installation surface. One embodiment of the invention provides a sizing system for determining solar photovoltaic (PV) potential of a user selected installation site. System **100** matches user selected roof space and energy needs to commercially available system components without the need for visits to the user selected installation site by a technician or engineer.

System **100** comprises a graphical user interface module **200** and at least one of an energy specification subsystem **3000**, a sizing subsystem **500** including a pitch calculator **594**, a shading subsystem **2000**, an image retrieval subsystem **110** and a package assembly subsystem **3100**. Various embodiments of system **100** are configured to further communicate with at least one of a plurality of energy system related databases, for example, contractor database **113**, customer database **103**, energy components database **105**, metadata source **130**, residential energy consumption information database **117**, energy rebate program information database **115** and residential building code database **111**.

Embodiments of system **100** as disclosed and enabled herein are implementable using commercially available hardware. For example a commercially available processor or computer system adapted in accordance with the teachings herein implements system **100** including at least one of subsystems **110**, **2000**, **3000**, **3100**, **500** and/or **200**. For example, one of ordinary skill in the art will recognize upon reading this specification, that commercially available processors, memory modules, input/output ports and other commercially available hardware components are suitable for use in constructing embodiments of system **100**. These may be assembled as taught in this specification to arrive at the various embodiments.

Further, the teachings contained in this specification are implementable in a variety of combinations of hardware and software components. Where appropriate, flowcharts and detailed descriptions are provided herein to enable one of ordinary skill in the art to implement the features and functions of embodiments of the invention. In addition, some embodiments of the invention are configured for communication between system **100** and databases **111-130** via wired or wireless Internet or other network communication links. Other embodiments of the invention are configured for wireless or wired internet communication between subsystems of system **100**.

Graphical User Interface (GUI) **200**

System **100** implements a graphical user interface unit **200** (GUI unit) that enables a user **107** to interact with system **100** and its subsystems. According to some embodiments of the invention GUI **200** is implemented by a server providing a website and serving interactive web pages for gathering information and providing calculation results, images and other energy system information to user **107**.

FIGS. **2** and **3** illustrate examples of an information presentation GUI **2000** and an information gathering GUI **380**, respectively. GUIs **2000** and **380** are generated by GUI unit **200** for presentation on a display device **108** of a user system **106** (best illustrated in FIG. **1**). For example, display device **108** displays GUI **380** to user **107**. At least a portion **381** of display screen **380** is configured to receive user information, for example, site location information from user **107**. User **107** provides the information by entering the information via, for example, a keyboard of system **106**.

System **100** receives user provided information related to location of a site to be provisioned with solar energy capability. GUI **200** provides the received user information to an image retrieval subsystem of system **100**. According to the embodiment illustrated in FIG. **1**, GUI **200** provides the received user information to a sizing subsystem **500** of system **100**. Sizing subsystem **500**, in turn provides the information to image retrieval subsystem **110**.

In alternative embodiments of the invention, location information received from user system **106** is provided directly to image retrieval subsystem **110**. In either configuration, system **100** uses the location information received from user system **106** to retrieve an image **153** of the location (or site) from a geophysical database **109**. In response to receiving the location information, system **100** provides an image corresponding to the location, for example an image of a roof of a house **391** for display on screen **380** of display device **108** of a user system **106**.

Embodiments of system **100** enable a user **107** to interact with system **100** to determine, at least partly automatically, information related to size of an installation area of a site. FIG. **2** illustrates a GUI **381** as displayed on a display screen **380** of a display device **108** of a user system **106**. GUI **381** enables user **107** to provide location information, for example, address **393** of a user-selected site via user system **106**. The information is transmitted via a communications link, for example the Internet **107** and received by system **100**. In response to receiving the location information, system **100** retrieves an image of the location from a source of images such as geophysical database **109**. System **100** provides a retrieved image **153** of the user selected site based on the location information provided by the user.

In one embodiment of the invention, a graphical user interface (best illustrated in FIGS. **8-9**) cooperates with sizing subsystem **500** of system **100** to implement a sizing tool enabling user **107** to determine surface dimensions and pitch of a surface, for example a roof **191** of a house appearing in the retrieved image **153**. Thus there is no need to physically visit the installation site to make measurements and perform sizing calculations.

Image Retrieval Subsystem **110**

Returning now to FIG. **1** an image retrieval subsystem **110** communicates with a source of images **109**. As used herein the term 'images' refers to photographic images and also to data and electrical signals representing photographic image information. The term 'images' also refers to data comprising other types of images such as still video images, video frames and fields of motion video images. A variety of image types and formats are suitable for use in system **100**. Suitable image formats include standard file formats containing satellite or aerial photography (such as JPG, GIF, PNG etc) and also images served through a tile-server, whereby a single image is broken into multiple tiles which are joined to form the full image. Furthermore, these images may also be generated from other data sources, such as vector shapes, 3D (CAD) files and others rather than satellite or aerial photography.

In one embodiment of the invention more than one source of images is provided to system **100** and used to determine roof size and pitch. For example, in one embodiment of the invention user **107** employs an image capture device embedded in, for example, a cellular telephone, to capture an image of roof **191**. The image captured by the image capture device is then transmitted by user **107** to system **100** via Internet **179**, or via cellular, satellite, radio frequency or other transmission means. In that case, system **100** determines at least one of roof size, pitch and shading based in part on the user-captured image and at least in part on at least one image retrieved from an image database such as geophysical database **109**.

In one embodiment of the invention source of images **109** comprises a geographical image database providing, for example, images **153** and **154**. In one embodiment of the invention images **153** and **154** comprise digital data corresponding to images comprising satellite photographs. In some embodiments of the invention images **153** and **154** comprise images uploaded to source **109** by a third party, for example, a homeowner, a site manager, and images otherwise provided to source **109** by a user of system **100**. In other embodiments of the invention, sources of images **109** include locally stored images.

In one embodiment of the invention images of geographic regions comprising potential sites to be provisioned with an energy system are obtained, for example, by satellite or aerial photography. The images are coded using image geo-coding software and stored in a memory, for example geographical database **109**. Geo coding refers to a process of finding associated geographic coordinates (typically expressed as latitude and longitude) from other geographic data, such as street addresses, or zip codes. With geographic coordinates the features can be mapped and entered into Geographic Information Systems, or the coordinates can be embedded into media such as digital photographs via geo tagging.

Reverse Geo coding refers to finding an associated textual location such as a street address, based on geographic coordinates. A geo coder is software or a (web) service that implements this process. Some embodiments of the invention rely on a reverse geo coder to obtaining site addresses based on geographic coordinates. The geographic coordinates are determined, for example, by examining geo coded images including sites of interest for provisioning energy systems. One embodiment of the invention employs a Geographic Information Service (GIS) such as Google Earth™ comprising image source **109**.

In one example embodiment of the invention image source **109** includes an image of a site considered for provisioning with an energy system wherein the site comprises at least one building structure, e.g., a house. The at least one image of the site represents a plan view, for example a top or bottom plan view, of a roof of the building. In some embodiments of the invention image source **109** includes at least one perspective image of a roof for installation of a solar energy system. In an example embodiment image retrieval subsystem **110** is configured to receive a first image **153** comprising a plan view of the roof and a second image **154** comprising a perspective view of the roof.

Sizing Subsystem **500**—Pitch Calculator **594**

System **100** includes a sizing subsystem **500** including a pitch calculator **594**. Sizing subsystem **500** is coupled for communication with image retrieval subsystem **110** and GUI **200**. Image retrieval subsystem **110** is coupled for communication, for example, via the Internet **179**, with a least one source of images **109**. Image retrieval module **110** is configured to provide at least one image **153** of a site to be provisioned.

GUI **200** cooperates with sizing subsystem **500** to implement a sizing tool enabling user **107** to determine surface dimensions and pitch of a surface without the need to physically visit the installation site to make measurements and perform sizing calculations. In response to receiving user information data, geophysical data including at least one image is downloaded from a source of geophysical data **109**. The downloaded geophysical information is selected based on information provided by the user. For example, in the case wherein user **107** is a customer considering purchase of an energy system, user-provided information includes, for example, an address of a home to be provisioned with an energy system. In that case, an image of the user's home, including a view of the user's roof is downloaded from source of images **109**. In one embodiment of the invention system **100** provides at least a portion of the downloaded image for display to user **107** on a display device **108** of a user's system **106**.

User **107** interacts with system **100** and sizing subsystem **500** via GUI **200** to measure portions installation areas included in displayed images. The measurements are provided to a pitch calculator **294**. Pitch calculator **294** determines pitch of a surface, for example, roof pitch, based on the image measurements made by user **107**. Alternative embodiments of the invention determine pitch of other installation surfaces, for example, installation platforms not associated with a building and ground based installation surfaces based on measurements made automatically by sizing subsystem **500**.

Shading Subsystem **2000**

In one embodiment of the invention image retrieval subsystem **110** provides at least one downloaded image **153**, **154** to shading subsystem **2000**. In one embodiment of the invention shading subsystem **2000** communicates with user system **106** via GUI **200** to enable user **107** to interact with the downloaded image to identify shading objects impacting sun access of an installation surface. In other embodiments of the invention user interaction is not relied upon to identify shading objects. Instead, system **100** implements image analysis techniques to identify shadows in an image and to generate shading data based on the shadow information in the image.

Energy Specification Subsystem

An energy specification subsystem **3000** is coupled for communication with sizing subsystem **200**. In some embodiments of the invention energy specification subsystem **3000** is further coupled for communication with shading subsystem **500**. Energy specification subsystem **3000** receives sizing information from sizing subsystem **500**. In some embodiments of the invention energy specification subsystem **3000** receives shading information from shading subsystem **2000**. Energy specification subsystem provides energy system specifications for a site represented in a downloaded image based on the sizing and shade information.

In some embodiments of the invention, energy specification subsystem **300** is coupled for communication with a package assembly module **400**. Package assembly module **400** is coupled for communication with a source of energy system component information, for example, an energy components database **105**.

Package Assembly Module **3100**

Package assembly module **3100** is configured to communicate with at least one of a component database **105** and a rebate program database **115**. Package assembly module includes calculator module (not shown). Package assembly module generates at least one package comprising solar energy components suitable for installation at the consumer's site. To do this, package assembly module evaluates at least some of the following information: information about energy to be supplied by a solar energy system provided by sizing module **500**; results of roof pitch, roof area, shading and other calculations.

Package assembly module **3100** communicates with component database **105** to determine suitable component selections to comprise package offerings for the consumer. Package assembly module obtains information about component prices and availability from database **105**. Based on this information package assembly module **3100** generates at least one package comprising suitable components for a solar energy system for the consumer's site. Information about the package, including price information, is provided by package assembly module **3100** to consumer system **106** via user interface module **200**. The information is displayed on a consumer display **106** to allow the consumer to select a package for purchase. Package assembly module receives the consumer's package selection.

External Databases

System **100** comprises system interfaces for communicating with external databases and sources of information relating to energy systems. For example, embodiments of the invention are configured to communicate with and receive data from geophysical database **109**, residential energy consumption database **117**, energy rebate database **115** and building code database **111**

Some embodiments of the invention include a contractor database **113**. In that case, contractor database **113** stores information, including for example, contractor location, qualifications, availability etc. related to contractors and installation support personnel. In that manner some embodiments of system **100** enable a user **107** to interact with GUI **200** to select a contractor to install an energy system procured using system **100**. According to an embodiment of the invention solar energy system installers, for example, electricians or electrical contractors are provided with on line training in sales, customer service and system maintenance. Some embodiments of the invention include a capability to automatically dispatch trained installers and sales personnel to customer's homes when a customer requests a face-to-face discussion.

After an installation is completed, some embodiments of systems and methods of the invention store a customer's information in customer database **103**. According to some embodiments of the invention an internet connection to a wireless output of a customer's energy inverter (for example equipped with a meter) will gather, analyze and display an installed energy system output and savings (financial and environmental). According to some embodiments of the invention recurring and on-demand site visits are automatically scheduled to maintain, clean and service a customer's system after an installation.

Information related to rebates for using alternative energy platforms is provided by energy rebate program database **115**.

In that case system **100** communicates with database **115** to factor financial incentives into cost calculations for a specific user selected site.

Thereby embodiments of the invention provide direct selling, remote automatic sizing and delivery of energy systems. The invention further provides methods that decrease the cost and increase the ease by which customers' access energy system information.

FIG. **27** is a flowchart illustrating steps of a method for provisioning energy systems according to an embodiment of the invention. At step **2703** Information about a site to be provisioned is received. In one embodiment of the invention a user, for example, a potential purchaser of an energy system, accesses a website implementing a system and method of the invention using, for example, a personal computer. A webpage of the website prompts the user to provide information to be used for provisioning a solar energy system to the user.

In one embodiment of the invention information about a site is received from a user, for example a homeowner, who may be considering installation of a solar energy system on a roof of a home. In other embodiments of the invention information about a site to be provisioned is provided by a vendor, an agent a commercial planner or other party desiring information about energy systems for a site. Examples of information received at step **2703** for a user/homeowner include such data as zip code, age of the home, square footage of the home, number of occupants and energy bill totals for a consecutive 12-month period. Various embodiments of systems and methods of the invention use this information, at least in part, to determine energy requirements of a home.

In response to receiving the user information data, geophysical data is downloaded from a source of geophysical data at step **2725**. The downloaded geophysical information is determined based on the information provided by the customer. The geophysical information includes, for example, an image of the customer's residence including a view of the customer's roof. In one embodiment of the invention the customer is shown an image of their own home. In one embodiment of the invention the image is obtained using satellite image geo-coding software. One embodiment of the invention employs a GIS service (for example Google Earth) to obtain images to locate and view properties. In some embodiments of the invention, only one image is retrieved from a source of images. In other embodiments of the invention, for example, for embodiments relying on 3-dimensional models, more than one image is retrieved from a source of images. In other embodiments of the invention, site images are accessed without the need to download images from a source of images. For example, images are rendered on a display device of a computer system of a user.

Site dimensions are determined at step **2750**. Examples of site dimensions include surface geometry, for example, the shape and area of a rooftop. In some embodiments site dimensions include pitch of a surface, for example, pitch of a roof. The site dimensions are determined by analyzing the images obtained in step **2725**. In one embodiment of the invention the site dimensions are automatically determined by analyzing the images accessed at step **2725**. In other embodiments of the invention site dimensions are determined or provided by a user. The site dimensions are used to generate energy system specifications for the installation site at step **2775**.

FIG. **5** Sizing Subsystem **500**

First Embodiment

The term 'sizing' as used herein refers to obtaining or generating length and width measurements for a generally rectangular planar installation surface such as a side of a roof. An installation surface is a surface area of a roof, for example a roof side contemplated for installation of energy system components. According to some embodiments of the invention, sizing of an installation surface is carried out by a sizing subsystem **500** automatically or at least partly automatically by means of user interaction with a GUI **560** of system **500**.

FIG. **5** illustrates a remote sizing subsystem **500** according to an embodiment of the invention. Subsystem **500** includes a graphical user interface **560** configured for communication with a computer system **506** accessible by a user **507**. GUI **560** is further configured for communication with an image retrieval subsystem such as subsystem **110** illustrated in FIG. **1**. GUI **560** provides images for display on display device **508** of user system **506**. By interacting with the displayed images, user **507** generates measurements **504** which are provided to a modeling unit **591**.

Once an image of an installation surface is downloaded to system **100** a sizing subsystem **500** is deployed to measure the installation surface. In one embodiment of the invention, dimensions of an installation surface, for example, a roof area, are determined by superimposing images representing differing views of the roof surface. For example, at least two images representing different views of the surface are provided and displayed to a user via a graphical user interface. As illustrated in FIG. **5** a first image of the surface to be sized is displayed to the user via a viewport **555**. A second image of the same surface to be sized is displayed to the user via a second viewport **556**. In one embodiment of the invention, GUI **560** is configured to enable user **507** to manipulated images **553** and **554** such that one image is superimposed on the other. GUI **560** determines dimensions of the surface being measured by vector evaluation of image displacement.

In one embodiment of the invention, GUI **560** implements a sizing tool (examples illustrated in FIGS. **8-14**.) The sizing tool is configured for interaction with user system **506** via a mouse, keyboard, cursor, trackball or other means such that user **507** is enabled to manipulate the sizing tool with respect to the images displayed in viewports **555** and **556**. In that manner GUI **560** enables user **507** to measure dimensions of a surface appearing in images **553** and **554**. GUI **560** records the measurements. In one embodiment of the invention, the recorded measurements are used to determine a configuration of solar panels suitable for installation on the surface, based on the measurements of the surface area and, in some embodiments, surface pitch.

According to one embodiment of the invention the shape of an installation surface is determined by plotting the perimeter of the installable area in a first view comprising a 2d representation of the installable area. The intersection of the plotted points with the plane of the installation surface determines the 3-dimensional installation surface perimeter.

FIGS. **6** and **9** illustrate respectively a perspective view and a side elevation view of a "real world" surface to be measured wherein the surface comprises a roof **600**. Roof **600** is defined by roof side surfaces **640** and **641** (**641** not visible in FIG. **6**). As seen in FIG. **6** roof surface **640** is defined by parallel side edges **631** and **731** and parallel side edges **630** and **730**. Roof side surfaces **640** and **641** meet to form a roof ridge **641**. Roof ridge **641** is elevated with respect to a bottom side surface edge **630**. The elevation of roof ridge **641** with respect to bottom edge **630** is represented by dimension H. A roof span of **600** is indicated as B. Roof **600** is oriented in FIG. **6** as indicated by axes **670**. In FIG. **9** orientation of roof **600** is indicated at **970**.

FIG. **10** illustrates a GUI **1000** enabling a user to measure portions of a surface to be sized, for example, portions of roof

600, illustrated in FIG. 6. In one embodiment of the invention, as illustrated by FIG. 10, an instructional video clip 1003 is displayed on a portion of the user's screen to assist user 507 in interaction with GUI 560. GUI 560 enables measurements of a surface such as a roof 600 to be determined by carrying out measurements on an image of the roof 600.

In one embodiment of the invention, a viewport 1000 displays an image in which a structure to be sized appears, for example, a house including a roof 600. In some cases an image presented in viewport 1000 will include roof 600 along with neighboring structures, for example, houses 1002 and 1004. In that case GUI 560 (FIG. 5) is configured to provide a marker, for example cross hair marker 1010. Marker 1010 is movable by user 507 via a mouse, trackball, or the like. In that manner user 507 is enabled to select, or indicate, a house, or a roof portion, to be sized by positioning marker 1010 over the image portion the user wishes to select.

A viewport 1000 is provided by GUI 560 (example first viewport illustrated in FIG. 5 at 555). In the embodiment illustrated in FIG. 10 system 500 provides a flat image of a roof which is, in real life, a three dimensional shape. As illustrated in FIG. 10 a surface area 1010 representing an installation surface is selectable by user 507 for sizing. As explained in more detail with respect to FIGS. 11-19, a user selects points on the image in the first viewport to define an installation surface.

Returning now to FIG. 5, the selected points are provided to modeling unit 591. Modeling unit 591 develops a description of the three dimensional roof shape based on two dimensional descriptions received from user system 506. In some embodiments of the invention, modeling unit 591 also receives image metadata for the image in viewport 1000. The image metadata is provided, for example, by a metadata source 530. System 500 uses the metadata to develop the three dimensional description of the roof 600. Image metadata includes, for example, image scale information for a displayed image. In one embodiment of the invention the scale information is used to determine a 'real world' size of roof 600 based, in part on roof dimensions measured on an image, and in part on metadata associated with the image.

In some embodiments of the invention metadata includes information such as latitude/longitude, altitude, position of camera, camera focal length etc. Meta data may be stored in the image itself for example, data stored in an image file, but not visible in the displayed image. In other embodiments of the invention, metadata is provided by a separate metadata data source 530. Metadata is cross referenced to a corresponding image, for example by image ID as indicated at 563.

In determining length and width of an image of a surface, sizing subsystem 500 cooperates with a modeling subsystem 591. Modeling subsystem 591 comprises a 3D transform/translation module 596 and a scaler 592. Image transform module 596 generates a transform, or map, for points on a user measured surface. The transform maps points defining the surface shape in one orientation with respect to a reference axis to corresponding points defining the surface shape in any other orientation with respect to the reference axis. Once a transform is generated, points defining a surface shape in, e.g., a perspective view are translatable to corresponding points comprising a side elevation model description of the shape.

FIG. 9 illustrates a side elevation view of the house 600 illustrated in FIG. 6. A side elevation description includes displacement information, e.g., relative height information. Relative height information is significant, for example, in determining a relative height of a roof ridge with respect to the roof base. Once the relative height is determined, pitch of a roof side is calculated using the height information and width information obtained during sizing.

For example, pitch of a roof 640, is given by rise (H)/run (B1). In one embodiment of the invention, run is estimated by determining the horizontal distance between a gutter edge 903 and roof ridge 641. Then the elevation (rise) of the ridge 641 above the gutter edge 903 is determined as indicated at H. Once horizontal distance (run) and elevation (rise) are determined, roof angle, and thus pitch, is calculated by pitch calculator 504. Therefore a homeowner need not manually measure a 'real life' roof in order to determine appropriate components sizes for an energy system to be installed on the roof.

Modeling unit 591 translates the points defining the shape in the viewed orientation of the displayed image to points defining the shape in a side elevation view, for example, as illustrated in FIG. 9. Points defining the shape in the side elevation view provide a scaled real world relative elevation of, for example, a roof ridge 641 with respect to a roof base 635.

Modeling unit 591 is coupled to a pitch calculator 594 to provide a displacement measurement H. For example, a displacement measurement H comprises a measure of z axis displacement of a roof ridge relative to a roof base for a roof base orientation along an x-y axis. Pitch calculator 594 provides pitch information, e.g., pitch of a roof based on the displacement and base information.

Thus sizing subsystem 500 is capable of determining height, width and pitch of an installation without the need for specific views, for example a plan view and an elevation view of a roof surface.

As illustrated in FIG. 5 GUI 560 provides viewports 555 and 556. Viewports 555 and 556 enable user 507 to view 2 dimensional representations, for example $1^{st}$ and $2^{nd}$ images 553 and 554, of a three dimensional scene. FIG. 7 illustrates an example viewport 700 displaying a first image of roof 600. Roof 600 is displayed to user 507 on a portion of display device 508 (illustrated in FIG. 5). A surface 640 of roof 600 under consideration for installation of an energy system is displayed within viewport 700. A roof 600 is displayed in viewport 700 at a first orientation with respect to a 3D axis 770. User 507 operates a mouse, trackball, keyboard or other input/output device coupled to user system 506 to interact with the image in viewport 700. To size installation surface 640 user 507 sets a first position indicator 711, e.g., a cross hair marker, on one corner of installation surface 640 of roof 600. User 507 sets a second indicator 707 on another corner of installation surface 640. User 507 sets a third position 709 by placing a third indicator on another corner of surface 705. First, second and third positions define a length and a width measurement of a rectangle representing dimensions of surface 640. In that manner $^{1st}$ measurements 561 are provided to modeling unit 591 as illustrated in FIG. 5.

In one embodiment of the invention, image scaling module 590 of modeling unit 591 receives the dimensions provided by GUI 560 for an image, for example, image 553. Image scaling module 590 further receives image scale information corresponding to image 553 from an image metadata source 530.

In some embodiments of the invention, image metadata is provided within the image information received from the image source, e.g. image source 509. In that case image retrieval module 110 extracts the image metadata from the received image information. In other embodiments of the invention image metadata is provided a source other than image source 509. In that case the metadata for respective images is provided to image scaling module 590. In some

embodiments of the invention, information identifying an image corresponding to metadata and vice versa (as indicated in FIG. **5** at **563**) is included in the image information and the metadata information. In that case the identifying information is used by system **500** to determine corresponding metadata for each displayed image.

FIG. **8** illustrates a viewport **800** displaying a second image of the roof of house **600** illustrated in FIG. **6**. The second image is displayed at a second orientation **870** with respect to the 3D axis orientation **770** of the first image. User **507** interacts with second image **850** to set first, second and third positions in the second image. To set first, second and third positions, user **507** places an indicator, such as a cross hair marker, on corresponding corners **811**, **807** and **809** of surface **640** as displayed in the second image. Each corner of surface **640** displayed in viewport **800** corresponds to a respective corner of surface **640** displayed in viewport **700**. For example corner **711** displayed in viewport **700** corresponds to corner **811** displayed in viewport **800**.

As marked by user **507** first, second and third positions define a length and a width measurement of generally rectangular surface **640**. Each measurement is taken in the second image with respect to a different axial orientation of the corresponding measurement taken in the first image. In that manner $1^{st}$ and $2^{nd}$ length and width measurements **562** are provided to modeling unit **591** as illustrated in FIG. **5**.

In one embodiment of the invention described above, a translator unit **596** comprises a commercially available 3D modeling software package such as AutoCad™. When provided with points defining a shape in first and second orientations, translator unit **596** is configured to describe the shape in any orientation, for example a side elevation view orientation illustrated in FIG. **9**. In that manner translator unit **596** provides a measurement H (indicated at **625** of FIG. **9**) representing displacement of roof ridge **641** from roof base **635**.

## Second Embodiment

Alternative embodiments of sizing subsystem **500** are illustrated in FIGS. **11-19**. FIG. **11** illustrates various example embodiments of an interactive measuring tool (**1150**, **1107**, and **1117**) for use in sizing surfaces such as roof of house **600** in FIG. **6**. In one embodiment of the invention at least one of tools **1150**, **1107** and **1117** are displayed in a viewport **110** to a user. A user selects a tool to use for measuring. User manipulation of a selected measuring tool positions the tool with respect to first and second images depicting the same surface, for example roof of house **600** in FIG. **6**. The measuring tool is rotatable and scalable by user **507** to align at least two sides of the tool an image of an object to be measured, for example a roof surface to be measured.

In one example embodiment of the invention, a user selects tool **1150** from viewport **1100**. In one embodiment dimensions of side **1187** and **1177** of interactive measuring tool **1150** are calibrated before displaying tool **1150** in viewport **1100**. For example, a scale of pixels to feet is determined for image of a roof of a house **600** based on metadata associated with the image of house **600**. Therefore, system **100** is enabled to provide 'real world' measurements for a roof surface by relating the known scale to the displayed tool sides.

The position of interactive measuring tool **1150** within viewport **1100** is adjustable by user interaction with tool **1150** via a mouse, keyboard, trackball or other input/output device. In addition, length of sides **1187** and **1177** are user adjustable. Referring now to FIG. **6**, in order to measure an installation surface area, such as a roof **640** area of house **600** in FIG. **6**, user **507** positions measuring tool **1150** over an image of roof **600** in alignment with a side of the image of roof **600**. User **507** adjusts the length of a tool side, for example side **1187**, of measuring tool **1150** to correspond in length to the length of a side of the image of roof **600**. Another side **1187** of measuring tool **1150** is aligned with a third side of the image of roof **600** and likewise adjusted in length to correspond to the length of corresponding side in the image.

A roof ridge **641** is marked by user **507** dragging a line tool along an image of ridge **641** within the perimeter of measuring tool **1150**. When the ridge line has been drawn, user **507** initiates a reading of dimensions of measuring tool **1150**. In addition, an orientation of measuring tool with respect to axes **670** (of FIG. **6**) is determined.

FIG. **12** illustrates an image **1215** representing a top plan view of a surface, or face of a 3D shape such as the roof of house **600** illustrated in FIG. **6**. According to one embodiment of the invention a viewport **1200** displays first image **1215** to user **507**. The imaged surface shape **1215** is defined by a length L (at **1230**), a base B (indicated at **1235**) and a ridge line **1241**. The surface shape **1215** is oriented in accordance with a reference plane, for example the x-y plane of reference axis **1211**. User **507** operates a mouse, trackball, keyboard or other input/output device coupled to user system **506** to interact with the image **1215** as described below.

To size surface **1215** user **507** superimposes sizing tool, in this example tool **1117** (illustrated in FIG. **11**) over at least a portion of image **1215**. In one embodiment of the invention two sided sizing tool **1117** is defined by sides **1127** and **1137**. User **507** adjusts the dimensions of at least one of the tool sides **1127** and **1137** using a keyboard, mouse, trackball or other input/output device. For example, the length of tool side **1137** is adjusted to match a corresponding side length, e.g., L at **1230** of image surface **1215**. In one embodiment of the invention user **507** adjusts a side width (e.g., at **1127** in FIG. **11**) of sizing tool **1117** to match the length B (at **1235**) of surface image **1215**. In that manner user **507** generates measurements which describe shape **1215** by length and base measurements. Further in some embodiments, information defining an orientation of shape **1215** with respect to a reference axis **1211** is generated by comparing orientation of adjusted tool **1107** to reference axis **1211**. The orientation information is provided to modeling unit **591**.

The image measurements comprising dimensions and orientation of measuring tool **1117**, as adjusted to image **1215** in viewport **1200**, are provided to modeling unit **591** as illustrated in FIG. **5**. Modeling unit **591** determines a transform that enables points defining the shape of measuring tool **1117**, as adjusted to image **1215** in a top down orientation of FIG. **11**, to be mapped to a projected shape of measuring tool **1117** as it would appear in any other orientation of tool **1117** in a 3D space. The transform enables subsequent adjustments of any portion of tool **1117** by a user to cause automatic corresponding adjustment of remaining portions of tool **1117** such that the aspect ratio of side **1127** to side **1137** of tool **1117** is preserved through subsequent measurements and movement of tool **1117**.

Having set the aspect ratio of tool **1117**, user **507** manipulates measuring tool **1117** to a second viewport **1300**, illustrated in FIG. **13**. FIG. **13** illustrates a viewport **1300** displaying a perspective image **1315** of roof of house **600** (illustrated in FIG. **6**). Perspective image **1315** of roof of house **600** is oriented with respect to a reference 3D axis **1311**. Viewport **1300** permits manipulation of tool **1117** in three dimensions, x, z and z, with respect to axis **1311**. User **507** adjusts tool **1117** with respect to the base B and length L of perspective image **1315** in three dimensions such that at least one of the

width or length of the sizing tool **1117** matches a corresponding one of base B and length L of image **1315**.

Manipulation of measuring tool **1117** in 3 dimensions (for example to align with B and L of **1315** in FIG. **13**) is enabled by transform/translation unit **596** of modeling unit **591**, illustrated in FIG. **5**. Adjustment of length of any side of measuring tool **1117** causes corresponding adjustment of length of remaining side of tool **1117**.

FIG. **15** illustrates an embodiment of measuring tool **1107** of FIG. **11** in 3 dimensions for alignment with roof image **600** in viewport **1300** illustrated in FIG. **13**. A ridge line is indicated in FIG. **15** at **641**

FIGS. **16-10** illustrate successive steps in manipulating measuring tool **1107** to obtain measurements of a roof image. For example, the steps indicate placement of measuring tool **1107** in viewport **1300** with respect to an image of roof **600** (illustrated in FIG. **6**). Once placed in an appropriate orientation, that is, in alignment with a side of the image, side lengths of tool **1117** are adjusted to conform to side lengths of roof of house **600**, as illustrated in FIG. **17**. Measuring tool **1107** is positioned in FIG. **17** such that side b of measuring tool **1107** aligns with base b of roof **600**. When measuring tool **1107** is positioned as illustrated in FIG. **17** $2^{nd}$ measurements are obtained of measuring tool **1107**. In addition information about orientation of measuring tool **1107** with respect to a reference axis **1611** is provided to modeling tool **1107**. Transform/translation unit **596** uses information thus provided, in addition to information provided by scaling unit **592**, to determine 'real world' measurements for roof **600**.

FIGS. **18** and **19** illustrate measuring tool **1107** as used to measure displacement of a ridge of roof **650** from base **635**. The displacement information is used by modeling unit **591** (FIG. **5**) to determine pitch of roof **600**. As illustrated in FIG. **18** user **507** displaces measuring tool **1107** in the z direction from its position illustrated in FIG. **17** to the position illustrated in FIG. **18**, i.e., displaced by a distance d from base **635** to ridge **641**. FIG. **19** illustrates a difference d between placement of measuring tool **1107** in FIG. **17** and placement of measuring tool **1107** in FIG. **18**. The difference measurement d is provided to modeling unit **591**. Transform translation unit **596** determines height h of ridge **641** with respect to base **635** of real world roof **600**. Once the real world height is known, pitch of the roof is determined.

The description provided above relates to one embodiment of measuring tool **1107**. An alternative embodiment of measuring tool **1107** is illustrated in FIG. **11** at **1117**. In the embodiment illustrated at **1117** of FIG. **11** only two sides of a measuring tool (one side representing width and one side representing length) are displayed to user **507**.

Returning now to FIG. **5**, 3D transformer/translation module **596** uses the displacement information to generate a 3D model of roof **600**. The model provides a description corresponding to a side elevation view of the same roof **600** including a height dimension d. An example side elevation description is illustrated in FIG. **9**.

In one embodiment of the invention scaling unit **592** translates viewport dimensions to real world dimensions. In one embodiment of the invention the real world dimensions are obtained from metadata. The system then tracks changes in the geometry of measuring tool **1107** in relation to the real world dimensions.

In some embodiments of the invention images displayed in a viewport are adjusted to conform to conventions. For example, in one embodiment of the invention images are scaled to ensure x pixels in a displayed image=x feet in a real world imaged object. In another example, an image orientation is adjusted such that a vertical direction (up down) in the real world imaged object corresponds to a selected reference axis, e.g., a Z axis for the image displayed in a viewport.

A simple implementation of installation surface measuring tool **1107** comprises a 2D rectangle with predetermined height and width (equivalent to a 3D box with height=0) overlaid over the image of an object with known magnification/scale/resolution (resolution) and rotation (e.g. 1 pixel=1 foot top-down image). The dimensions (height & width) of the first model can be adjusted to match the dimensions of the object. Since the resolution of the image is known, the real-world dimensions of the object can be calculated. (e.g. A length of 10 pixels on the image could represent 10 feet on the ground).

FIG. **28** illustrates steps of a method for determining pitch of an installation surface. a plan view of an image representing the installation surface is displayed at step **2803**. First indicia are positioned about a perimeter of the installation surface image at step **2805**. A perspective image of the installation surface is displayed at step **2807**. Second indicia are placed about the perimeter of the image of the installation surface. At step **2813** a sizing window is displaced vertically in the perspective to traverse the distance between the base of the installation surface and a ridge of the surface. The displacement is transformed to a height measurement, for example height corresponding to a side elevation view and representing real world height of a roof ridge. Pitch is calculated at step **2817** based on the height.

FIG. **20** Shading Subsystem

Photovoltaic cells' electrical output is extremely sensitive to shading. When even a small portion of a cell, module, or array is shaded, while the remainder is in sunlight, the output falls dramatically. Therefore embodiments of the invention provide systems and methods that consider shading factors such as trees, architectural features, flag poles, or other obstructions in provisioning a solar energy system.

FIG. **20** illustrates an embodiment of a sizing subsystem **500** configured to determine shading for an installation surface. To determine shading user **507** measures images of shading objects as they appear in viewports together with an installation surface. User **507** sizes shading objects in the same manner as described above for sizing a roof.

Various embodiments of the invention use a plurality of corresponding images (and associated meta-data, where available) of a single structure to determine shading factors. A technique of one embodiment of the invention maps real-world points in a 3d space to images of a structure. Reference shapes comprising two and/or three dimensional shapes are super-imposable onto one or more of these images in a manner similar to that described above for measurement tool **1107** of FIGS. **12-19**.

Measurements resulting from the superimposition are used by modeling unit **591** to calculate angles, distances, and relative positions of potential shading objects with respect to an installation surface. In one embodiment of the invention a user is enabled to create and/or manipulate basic shapes, such as measuring tool **1107**, to superimpose the basic shapes onto images of the structure obtained by mapping real-world points. In one embodiment of the invention real-world points are referenced to images obtained, for example, from a geographic or geologic database comprising two dimensional and/or three dimensional satellite images of structures such as residential structures.

According to some embodiments of the invention a 3D model of a shading object is constructed by user **507** indicating a first set of perimeter points in a first image of a shading object and indicating a second set of corresponding perimeter points in a second image of the same object. In other embodiments of the invention top-most points of shading objects are identified without indicating perimeter points. In some embodiments of the invention shading objects are created for

a scene using 3d primatives or meshes. In some embodiments shading objects are created using Computer Assisted Drawing (CAD) software.

In other embodiments shading objects are created automatically by turning multiple perimeter points from one-or-more viewports into a 3d object/mesh. Modeling unit **591**, including scaler **592** and 3D position transformer translator **596**, operate on the indicated points in the first and second images in the same manner as described with respect to indicators for installation surfaces. Modeling unit **591** provides a scene model comprising three dimensional descriptions of an installation surface as well as user selected shading objects in the vicinity of the installation surface. A shadow projection calculator receives the scene model from modeling unit **591**.

In addition shadow projection calculator receives a sun ray model form sun path model **2005**. In one embodiment of the invention sun path model **2005** comprises a database of sun ray projections by latitude and longitude and by month, year, day and time of day. In one embodiment of the invention boundaries of shadows cast by shading objects on the installation surface are determined by projecting the outline of the shading object onto the installation surface, the lines of projection being parallel to the sun's rays. The direction of the sun's rays relative to the installation surface is determined by comparing the sun ray model to the scene model.

Sun path model **2005** is based upon charts or sun calculators that have been prepared by different organizations. One example of widely available solar diagrams is the Sun Angle Calculator, which is available from the Libby-Owens-Ford Glass Company in the United States. This is a slide rule type of device that will indicate directly the value of H.S.A. and V.S.A. for any time and date during the year at all the latitudes evenly divisible by four between 24 and 52 degrees. The calculator can also be used to estimate the solar irradiation that any sunlit surface can receive on a clear day at any season. Another suitable set of charts is the Diagrammes Solaires prepared by the Centre Scientifique et Technique du Bâtiment in France. These charts and an accompanying brochure on how to use them (in French) are available through the Division of Building Research of the National Research Council of Canada or directly from C.S.T.B. in Paris. These are suitable to construct the H.S.A. and V.S.A. for any combination of time, date, latitude and wall orientation.

The position of shadows on the installation surface is determined by reference to scene model **2009**. The scene model is oriented in a reference orientation and rotated in a 3D space to simulate the daily rotation of the earth. In that manner scene model **2009** and sun ray model **2007** are configured to simulate a conventional heliodon. A heliodon is a special turntable that causes a physical scene model to move with respect to a reference light source as the real world scene will move with respect to the sun. The model adjustable for latitude and date. The orientation of the installation surface is taken into account when initiating the model rotation.

Table 1 provides an example shadow calculation useful for implementing embodiments of shadow projection calculator **2000**.

TABLE I

Length of Projection in Feet Required to Cast A Shadow 1 Foot High on a Building at 44° North Latitude

| Time | Surface Orientation | | | | | | | |
|---|---|---|---|---|---|---|---|---|
| | South | | 30° East of South | | 60° East of South | | East | |
| (Sundial Time) | 21 May 21 Jul. | 21 Mar. 21 Sep. | 21 May 21 Jul. | 21 Mar. 21 Sep. | 21 May 21 Jul. | 21 Mar. 21 Sep. | 21 May 21 Jul. | 21 Mar. 21 Sep. |
| 8 | 0.14 | 0.97 | 0.83 | 2.04 | 1.29 | 2.56 | 1.41 | 2.40 |
| 9 | 0.30 | 0.97 | 0.73 | 1.53 | 0.95 | 1.68 | 0.93 | 1.39 |
| 10 | 0.39 | 0.97 | 0.62 | 1.24 | 0.69 | 1.18 | 0.57 | 0.80 |
| 11 | 0.43 | 0.97 | 0.51 | 1.02 | 0.45 | 0.81 | 0.27 | 0.37 |
| 12 | 0.45 | 0.97 | 0.39 | 0.84 | 0.22 | 0.48 | — | — |
| 13 | 0.43 | 0.97 | 0.24 | 0.65 | — | 0.16 | — | — |
| 14 | 0.39 | 0.97 | 0.05 | 0.44 | — | — | — | — |
| 15 | 0.30 | 0.97 | — | 0.14 | — | — | — | — |
| 16 | 0.14 | 0.97 | — | — | — | — | — | — |

In addition a variety of graphics programs for visualizing solar shading for proposed building are commercially available and suitable for use in constructing various embodiments of the invention. For example "Visual Sun Chart" is a graphics program useful to determine if access to solar energy for an installation surface.

According to an embodiment of a method of the invention, images are analyzed to determine if there are any objects shading a proposed system at greater than a given angle above the horizon. For example in one embodiment of the invention images are analyzed to determine if there are any objects shading a proposed system at angles between about 5 degrees and 50 degrees between stated points on the azimuth. In another embodiment of the invention images are analyzed to determine if there are any objects shading a proposed system at greater than about a 26 degree angle between stated points on the azimuth.

The shading information thus obtained is used in one embodiment of the invention to determine the level of rebate applicable to a proposed system at that site. In contrast to systems of the invention, conventional systems perform this step manually by a costly on-site visit. A technician uses a tool that measures the geometric angles of objects located in the viewfinder of the tool, facing away from the system to determine shading impact. The techniques of some embodiments of the invention obviate the necessity of such an on-site visit.

Sun Path Model **2005**

Table is an example of data comprising sun path model **2005**.

| Time (solar) | Mar. 21 and Sep. 21 | | Jun. 21 | | Dec. 21 | |
|---|---|---|---|---|---|---|
| □$_s$ | □$_s$ | □$_s$ | □$_s$ | □$_s$ | □$_s$ | □$_s$ |
| 06.00 | 0.0 | −89.6 | 5.4 | −247.1 | 0.0 | −67.2 |
| 08.00 | 29.0 | −81.8 | 32.7 | −250.7 | 20.6 | −58.1 |
| 10.00 | 57.1 | −67.0 | 60.0 | −246.6 | 42.7 | −38.6 |

-continued

| Time (solar) | Mar. 21 and Sep. 21 | | Jun. 21 | | Dec. 21 | |
|---|---|---|---|---|---|---|
| □$_s$ | □$_s$ | □$_s$ | □$_s$ | □$_s$ | □$_s$ | □$_s$ |
| 12.00 | 75.9 | 0.0 | 80.3 | −180.0 | 52.9 | 0.0 |
| 14.00 | 57.1 | 67.0 | 60.0 | −113.4 | 42.7 | 38.6 |
| 16.00 | 29.0 | 81.8 | 32.7 | −109.3 | 20.6 | 58.1 |
| 18.00 | 0.0 | 89.6 | 5.4 | −112.9 | 0.0 | 67.2 |

The sun-path model **2005** is a plot of the angular position of the sun as it traverses the sky on a given day. In such a model, the horizontal axis shows the azimuth angle, and the vertical axis shows the altitude angle.

Solar time is the time based on the physical angular motion of the sun. Solar noon is the time when the altitude angle of the sun reaches its peak. Solar time can be calculated from

$$t_s=t_l_4(L_{gs}-L_{gl})+E_{qt}$$

where

$t_s$=solar time,

$t_l$=local standard time,

$L_{gs}$=standard local longitude,

$L_{gl}$=actual longitude, and

$E_{qt}$=equation of time (min).

FIG. **29** illustrates steps of a method for determining shading for an installation surface. At step **2903** an image of the installation surface is received. At step **2905** dimensions of the surface are determined by measuring the surface as it appears in the image. At step **2907** shading objects appearing in the image are measured. At step **2909** a scene model is generated based on the measurements of the surface and the shading objects. At step **2911** sun path data is obtained. At step **2913** the sun path data is used to determine sun ray projection onto the scene model. At step **2915** shading for the surface is determined based on the sun ray projection.

Panel Orientation

One embodiment of the invention accounts for panel orientation in determining sun access of an installation surface. In one embodiment of the invention a solar panel array is mounted at a fixed angle from the horizontal. In other embodiments of the invention a solar panel array is mounted on a sun-tracking mechanism. According to one embodiment of the invention sizing subsystem **500** of a system of the invention is configured to communicate with a source of solar data, for example sun path model **2005**. In one embodiment of the invention the source of solar data comprises average high and lows for panels oriented at the same angle as the latitude of major US cities. Sizing module **500** determines a recommended orientation for solar panels based at least in part on the information obtained from the source of solar data **2005**.

In one embodiment of the invention a solar panel array is mounted on an installation surface at a fixed angle from the horizontal. In other embodiments of the invention a solar panel array is mounted on a sun-tracking mechanism.

FIG. **23** Generating Energy System Specifications

One example embodiment of the invention generates energy system specifications customized for a user selected installation site. Energy system specifications relate to energy generating capacity of a selected site. For example for installation of a solar energy system, a roof surface is evaluated to determine energy related parameters, such as available installation area, orientation of the installation surface with respect to the sun, and the effects of shading objects on the installation surface. A total maximum energy generating capacity of the roof is determined based on the parameters and based on the energy generating characteristics of available solar system components.

FIG. **23** is a block diagram of an energy system specification (ESS) generator **2300** according to an embodiment of the invention. ESS generator **300** receives surface dimension information related to a site at input **381**. In one embodiment of the invention input **381** is provided with sizing information, for example, from sizing subsystem **200**. Sizing information can include, for example, surface area available for installation, shape of the available area, slope of the area, and other information related to the installation site.

ESS generator **2300** provides energy system specifications for a site based on the surface dimension information for the site. Energy system specifications comprise information for determining suitable energy system components for installation on a site to be provisioned. For an example site comprising a rooftop, ESS generator determine energy per square foot of roof surface.

In one embodiment of the invention, ESS generator determines an amount of energy which is potentially generated by each installable surface area of an installation site. In one example embodiment, energy potentially generated is given by:

$$\text{Surface Area}\times\text{Solar Insulation}\times\text{Energy reduction due to pitch \& azimuth}=\text{Potential Solar Energy.}$$

Wherein surface area is an amount of surface area in square meters (or equivalent) and solar Insulation is the amount of solar energy radiation received, typically measured as "kilowatt hours per year per kilowatt peak rating".

In one embodiment of the invention solar insulation is calculated based on data in a solar insulation database (not shown). In that embodiment user-provided location information is used to search the insulation database for a solar insulation data associated with the site selected for installation. The insulation calculations are carried out in one embodiment of the invention using the energy system specifications generated by energy system specification subsystem **2300** to correspond to installation surface dimensions provided by sizing subsystem **200**. In other embodiments of the invention energy system specification subsystem **2300** calculates insulation based on local electric costs determined by reference to a database such as database **117** (illustrated in FIG. **1**).

In one embodiment of the invention ESS generator **2300** provides specifications for a site based on site's latitude and longitude. In one embodiment of the invention the calculation accounts for pitch & azimuth information received from sizing subsystem **200**. As used herein the term 'azimuth' refers to an angle with respect to north. In some practical implementations of energy systems, energy output of an installed energy system is reduced due to pitch & azimuth considerations.

In one embodiment of the invention a combination of tilt of a slope compared to "flat" and the azimuth of the slope is determined by system **2400** based on information provided by sizing subsystem **200**. The energy received by a surface is reduced by this determination. An amount of the reduction amount is calculated automatically in one embodiment of the invention.

In another embodiment of the invention the reduction amount is calculated by reference to a suitable database containing standard reference tables. In one embodiment of the invention ESS generator **2300** identifies a model site with characteristics similar to the site under evaluation by ESS generator **2300**. A dataset for the model site is adjusted to

match as closely as possible the characteristics of the site under consideration by ESS generator **2300**. For example, if a site under consideration by ESS generator **2300** is twice as big as a model site and at the same tilt & azimuth, then ESS generator **2300** multiplies the Energy System Specification parameter "energy output" by 2 for the site under consideration. In one embodiment of the invention ESS generator **2300** is provided with shading information from a shading subsystem **500**. Shading information is provided for the surface for which specifications are to be generated. Shading effects are expressed as energy per square foot of surface area in one embodiment of the invention.

In some embodiments of the invention ESS subsystem **2300** receives information about home energy consumption related to the consumer's residence from a source of residential energy consumption, for example database **117** illustrated in FIG. **1**. ESS generator **2300** adjusts an energy system specification based on the home energy consumption information. For example, if home energy consumption is lower than the potentially generated energy, the system specifications may be adjusted such that a system with a lower than maximum possible energy output is defined.

One embodiment of the invention provides for automatic selection of energy system components based on energy system specifications provided by ESS generator **2300**. For example, specifications for energy system components are stored in a component database **2305**. ESS generator **2300** is configured to communicate with component database **2305**. ESS generator **300** compares energy system specifications stored in the database with specifications for energy system components for a site.

FIG. **25** is a flowchart illustrating steps of a method for generating energy system specifications according to an embodiment of the invention. At step **2501** an image including a surface upon which an energy system is to be installed is received. At step **2503** pitch of the installation surface is determined by measuring the surface as it appears in the image. At step **2505** dimensions of the installation surface are determined by measuring the surface as it appears in the image. At step **2507** compass orientation of the installation surface is determined. In one embodiment of the invention compass orientation is determined by analyzing the image of the surface. In other embodiments of the invention compass orientation is determined using metadata associated with the image.

In an optional step **2509**, shading information for the installation surface is calculated based on the image of the surface including shading objects impacting the installation surface. Maximum energy generating capacity of the installation surface is determined by accounting for the pitch, surface dimensions, surface orientation and shading in determining insulation of the surface. In some embodiments of the invention energy generating capacity is calculated considering energy generating capacity of selected energy system components. In one embodiment of the invention energy generating capacity is expressed as KW per square foot.

Components

FIG. **24** illustrates an example solar energy system **2400** including typical components. Information about the components of energy system **2400** are stored in component database **2305** of subsystem **2300**. System **2400** comprises an array **2450** of solar panels **2401-2409**. Panels **2401-2409** are connected through a DC disconnect **2411** to an inverter **2413**. Inverter **2413** is connected through a meter **2414** to an AC disconnect component **2415**. AC disconnect component **2415** is connected to an AC service Entrance **2417**. AC service entrance **2417** is connected through utility meter **2419** to a conventional energy grid.

Table 1 provides example specification information for components, for example, commercially available solar system panels.

TABLE 1

| Model | XW6048-120/240-60 | XW4548-120/240-60 | XW4024-120/240-60 |
|---|---|---|---|
| Part Number | 705200 | 705201 | 705202 |
| Price | $4500.00 | $3950.00 | $3950.00 |
| Output Power (Watts) | 6000 | 4500 | 4000 |
| Surge rating (10 seconds) | 12000 | 9000 | 8000 |
| Efficiency - Low Load | | 95% | |
| Efficiency - CEC weighted | 92.5% | 93% | 91% |
| CEC power rating | 5752 W | 4500 W | 4000 W |
| DC Current at rated power | 130 A | 96 A | 178 A |

FIG. **24** Quoting System

FIG. **24** illustrates a quoting subsystem **2400** according to an embodiment of the invention. Quoting subsystem **2400** comprises a user interface module **2460** configured for communication with a computer system **2406** of a user **2407**. In some embodiments of the invention user **2407** is a potential purchaser of an energy system. For example user **2407** is a homeowner interested in purchasing a solar energy system for installation on a roof of a home. In other embodiments of the invention, user **2407** is third party provider of solar energy systems. In that case user **2407** interacts with quoting system **2400** to provide quotes to, for example, commercial enterprises, government agencies and other parties interested in procuring a solar energy system for installation on a site. User interface module **2460** is coupled to a package analysis module **2487**, a package manager unit **2488**, and a package view unit **2486**.

In one embodiment of the invention a visual image of the customer's roof is displayed along with a pre-determined system of an average size. A consumer is then enabled to 'drag and drop' solar panels, and in some embodiments other components, on and off of the displayed image. Some embodiments of the invention enable a consumer to scale the system up and down in size using a mouse, keyboard or other input device. Such embodiments enable consumers to increase and decrease the size of the system to suit the consumer's aesthetic and economic preferences. Some embodiments of the invention automatically adjust in real-time the on-screen display of the package information including cost, economic and environmental outputs in accordance with each 'drag and drop' adjustment.

In that manner embodiments of the invention enable a consumer to engineer a custom solar system remotely. An energy specification subsystem **300** is coupled to package analysis module **2487** and to an image analyzer system **2490**. Image analyzer system **2490** is coupled to a source **2409** of images **2453**, **2454**. A model storage unit **2491** is coupled to package analyzer **2487**. Model storage unit **2491** stores reference packages comprising, for example, packages comprising a variety of predetermined package configurations including commonly used component sizes.

Package analyzer **2487** is coupled to an energy components database **2405**. Energy components database **2405** stores specifications, including cost of energy system components. An example energy system component specification is illustrated at **2493**. Package information comprising information related to components selected to comprise a package is provided from energy components database **2405** to package

manager unit **2488**. Package manager unit **2488** stores package information in a package information storage unit **2497**. According to one embodiment of the invention package information storage unit **2497** stores images and package information related to package components. Package view unit **2487** provides images of assembled packages for display as purchase options on display device **2408** of system **2406** to user **2407**.

As illustrated in FIG. **22** systems and methods of the invention provide a displayed image **2503** of a customer engineered solar PV system **2450** as the system appears on the customer's roof **600**. In one embodiment of the invention, user selectable packages **2501** are displayed with the image of the customer's roof. Selection of a package option will cause the displayed image of the customer's roof to change the solar PV system image to correspond to a selected package.

In one embodiment of the invention a quote for the displayed system is provided in association with the image of the system. According to some embodiments of the inventions the system also displays economics and environmental information about a selected package option. Economic and environmental information include such factors as: energy produced, cost of the system and rebate, electricity cost reduction, payback period, CO2 tons avoided, etc. In one embodiment of the invention economic and environmental information is displayed on-screen with the selectable package configurations illustrated at **2501** in FIG. **23**. Embodiments of the invention are configured to communicate with databases, for example databases of third-party data providers, comprising electricity data, solar output data, geographic photographic data, and subsidy data. Accordingly the invention provides a comprehensive online solution for consumers interested in investigating the benefits of a solar PV system.

In one embodiment of the invention, user interface module **2460** of system **2400** illustrated in FIG. **24** communicates with user system **2406** via a communications link such as the Internet to receive user provided information. The user provided information includes a location of a site to be provisioned with an energy system. The location information is provided to a package analyzer **2487**. Also provided to package analyzer **2487** is an energy system specification for the site at the location provided by user **2407**.

In some embodiments of the invention sizing subsystem **200** (illustrated in FIG. **5** at **500**) receives energy consumption data related to the user specified location, from a source of energy consumption data **117**. According to some embodiments of the invention sizing module **200** receives user provided system criteria information from user system **106**, for example, a percentage of total energy user **2407** desires to supply using a solar energy system. Based on the information about energy consumption received from database **117** and the desired energy production of a solar energy system as indicated by user **2407**, and further on the energy specification provided by energy specification subsystem **300**, package analyzer **2487** determines at least one package comprising components matching the criteria as closely as possible.

FIG. **26** illustrates steps of a method for quoting energy systems according to an embodiment of the invention. At step **2601** site dimensions are received, for example, from a sizing subsystem such as subsystem **500** illustrated in FIG. **1**. At step **2611** energy specifications are generated for the site based on the site dimensions. The specifications are generated, for example, by an energy system specification generator such as generator **2300** illustrated in FIG. **24**. At step **2613** components are automatically selected from a component database based on the site dimensions and the energy system specifications. In cases where a plurality of possible component configurations are suitable for meeting an energy system specification, a plurality of package options comprising various arrangements of suitable energy system components are determined. The package options are displayed on a display device of potential system buyer at step **2621**.

At step **2623** a package selection is received from a potential system buyer indicating one of the plurality of displayed packages. Once a package selection is received systems and methods of the invention display information about the selected package including, for example, cost and energy savings. In one embodiment of the invention the step of obtaining site dimensions at **2601** is carried out by receiving information about the site location at step **2603**. At step **2605** an image is selected, for example, from a source of geographical images. The selected image is analyzed at step **2607** to determine site dimensions.

According to one embodiment of the invention the step **2613** of selecting components to comprise a package is carried out by calculating component sizes based on system specifications at step **2615**. Packages are configured based on the calculated component sizes at step **2617**. The packages are displayed to a customer at step **2619**.

A package manager unit **2488** receives package information from package analysis unit **2487** and stores the information in package information storage **2497**. Package manager unit **2488** receives package selection and other information from user **2407** via GUI **2460**. In one embodiment of the invention package manager unit **2488** provides package views to a user **2407** while enabling user **2407** to interact with package manager **2497** to customize a system to the user's preferences.

In one embodiment of the invention economic and environmental information is provided to a display screen, **2408** of user system **2406**. The information is displayed in a first portion of display screen **2408** while information related to suitable packages is displayed in a second portion of display screen **2408**.

Embodiments of the invention are configured to communicate with databases, for example databases of third-party data providers, comprising electricity data, solar output data, geographic photographic data, and subsidy data. Accordingly the invention provides a comprehensive online solution for users to investigate the benefits of an energy system.

One embodiment of the invention remotely determines the feasibility of installing a solar energy system as a preliminary step to configuring a package. One embodiment of the invention automatically considers site access and other engineering issues in assessing feasibility. One embodiment of the invention remotely determines the presence of shading objects above a given angel of incidence and accounts for these objects in determining feasibility and in selecting package components. One embodiment of the invention automatically selects the optimal roof and roof portions upon which to locate PV panels for optimal photovoltaic performance. One embodiment of the invention determines a maximum system size that can be configured to fit on an optimal roof area.

FIG. **30** illustrates steps of a method for providing a quote to a potentially purchaser of an energy system according to one embodiment of the invention. at step **3101** candidate structures are selected for installation of solar energy system packages. for each candidate structure energy usage data is determined at step **3103**. For each candidate structure an image of the structure is obtained at step **3101**. Also for each structure, rebate information is obtained at step **3105**.

At step **3109** the images are analyzed to determine structure dimensions such as surface area and pitch. The dimensions are used in calculating the size of components to com-

prise an energy system for the structure. At step **3119** a system is offered to a customer for a candidate structure. In one embodiment of the invention a system offer is displayed on a display device for viewing by a customer. A selectable icon is provided enabling the customer to select the displayed offer for purchase at **3117**. In one embodiment of the invention the customer is contacted to offer the system for a candidate structure at an automatically determined price.

In one embodiment of the invention the displayed offer includes information about the offered system package or packages. Information is selected from a variety of information types, for example, information may include indications of a cost of a package and indications of energy savings expected to be realized by a particular offer.

Alternative Sizing Example

FIG. **31**

FIG. **31** illustrates an embodiment of the roof sizing **1107** tool described above with respect to FIGS. **15-19**. FIG. **31** is a top plan view of a roof **3110** of a structure **5** (not visible) as the structure appears displayed on a display screen of a computer system according to an embodiment of the invention. In the example shown, the roof **3110** is to be sized for installation of solar panels. The roof **3110** is defined by four lateral side edges **3112**, **3114**, **3116** and **3118**, and a ridge **3120**. According to one embodiment of the invention structure **5** is one of a plurality of structures within a single geographic region or example, a plurality of homes within a block or neighborhood. In one embodiment of the invention the top view image is obtained by downloading the image from a geophysical information service (GIS) such as provided by Microsoft, Google, or any of a number of other commercially available databases.

FIG. **32**

FIG. **32** illustrates a graphical user interface (GUI) for sizing the roof illustrated in FIG. **31**. The sizing GUI includes first, second, third and fourth reference lines. The first, second, third and fourth reference lines are displayed on a display device. The display device is operably coupled to a processor such as a personal computer programmed to enable a computer user to move the first, second third and fourth reference lines using a mouse, trackball or other positioning device.

In operation the user positions the first, second, third and fourth reference lines such that each reference line aligns with a corresponding lateral side edge **3112**, **3114**, **3116** and **3118**. In that manner a rectangle representing the shape of the roof to be sized is defined by the intersection of the reference lines. A first ridge reference line is positioned by the user to align with a ridge **20** of the roof to be sized. The rectangle and the first ridge reference line comprise a model **31100** of the roof to be sized. The model is saved and applied to different images of the same roof as part of a sizing method of an embodiment of the invention.

FIG. **33**

FIG. **33** illustrates model **31100** comprising four sides S**1**-S**4** and a first ridge R**1**. Arrows **6** and **7** indicate translation and rotation of the model in accordance with an embodiment of the invention. In other words, the invention enables a user to manipulate the model by translation and rotation while preserving the geometric relationship between the sides and ridge. For example side s**2** has a length dimension x whose value is retained during any translation or rotation of the model by a user. The model is represented in two dimensions and thus serves as a "base" reference during the sizing process.

FIG. **34**

FIG. **34** illustrates a perspective view, i.e., an oblique view, of a structure **5** including the roof illustrated in FIGS. **32-33** above. The model **31100** is rotatable and translatable by the user operating model interface controls (example illustrated in FIG. **36**). A user manipulates model **31100** to align at least two side edges of the model with at least two corresponding lateral sides of the roof structure. When the model is aligned a second ridge R**2** is defined aligning a reference line with the $2^{nd}$ reference ridge as illustrated in FIG. **34**. The separation of the first and second ridges after aligning the model to the roof is represented by h in FIG. **34**.

Thus, by positioning the model with respect to the perspective view of the roof, the user is able to determine the height of the ridge above the baseline of the roof. The length of a side perpendicular to the ridge line, for example side s**2**, is known from the previous step of generating the model by forming a rectangle using reference lines. Since the height and span (for example, length of side s**2**) of the roof are known, the roof pitch can be automatically calculated.

FIG. **35**

FIG. **35** illustrates a top plan view of a roof to be sized as the roof appears in an image obtained from a geographical information service (GIS). In one embodiment of the invention the image file obtained from the GIS is adapted to include information about the scale of the image. In one embodiment of the invention image metadata is transmitted with the image. The image metadata includes scale information for the image. In another embodiment of the invention the image file is adapted to include information about the exterior orientation of the camera capturing the image, and defines its location in space and its view direction. In another embodiment of the invention, the inner orientation defines the geometric parameters of the imaging process. This is primarily the focal length of the lens, but can also include the description of lens distortions. Further additional observations play an important role: With scale bars, basically a known distance of two points in space, or known fix points, the connection to the basic measuring units is created. FIG. **35** further illustrates first, second third and fourth reference lines as well as vertical reference lines as they appear comprising a graphical user interface according to an embodiment of the invention.

FIG. **36**

FIG. **36** is an image providing a perspective view of the roof of the image of FIG. **35** and illustrating vertical reference lines in accordance with an embodiment of the invention.

FIG. **37**

FIG. **37** is a second perspective view of the roof illustrated in FIGS. **35** and **36**. According to some embodiments of the invention a plurality of different perspective views are obtained. A model obtained using a top plan view is used on each perspective view to size the roof. The greater the number of perspective views used to obtain roof pitch information, the more accurate the resulting measurement of roof pitch.

There have thus been provided new and improved methods and systems for provisioning a solar energy system. While the invention has been shown and described with respect to particular embodiments, it is not thus limited. Numerous modifications, changes and enhancements will now be apparent to the reader. All of these variations remain within the spirit and scope of the invention.

We claim:

**1**. A computing system for generating a roof estimate report, the computing system comprising:

a memory;

a roof estimation module that is stored on the memory and that is configured, when executed, to:

receive a first and a second aerial image of a building having a roof, each of the aerial images providing a different view of the roof of the building;

correlate the first aerial image with the second aerial image;

generate, based at least in part on the correlation between the first and second aerial images, a three-dimensional

model of the roof that includes a plurality of planar roof sections that each have a corresponding slope, area, and edges; and

generate and transmit a roof estimate report that includes one or more top plan views of the three-dimensional model annotated with numerical values that indicate the corresponding slope, area, and length of edges of at least some of the plurality of planar roof sections.

**2**. The computing system of claim **1** wherein the roof estimation module is further configured to correlate the first and second aerial images by receiving an indication of one or more corresponding points on the building shown in each of the first and second aerial images.

**3**. A system for remotely determining measurements of a roof, comprising: a computer including an input means, a display means and a non-transitory memory; and a roof estimation software program stored in the non-transitory memory and operable to cause a processor of the computer to: receive location information of a building in a selected region; receive image files representing a plurality of distinct roof sections of a roof of said building; determine, measurements of the roof including size, dimensions, and pitch of the plurality of distinct roof sections of the roof of said building based solely on the received image files; and outputting a report having the determined measurements therein.

**4**. A method for remotely determining measurements of a roof comprising:

receiving image files of at least a portion of a roof;

determining, by a computer system, roof pitch measurements by constructing a three-dimensional geometry of the roof based solely on the received image files;

determining roof pitch measurements based on the three dimensional geometry;

and providing a roof report based on the roof pitch measurements.

* * * * *