Filed on Behalf of: Cisco Systems, Inc.

UNITED STATES PATENT AND TRADEMARK OFFICE

BEFORE THE PATENT TRIAL AND APPEAL BOARD

CISCO SYSTEMS, INC.,

Petitioner,

- vs. -

CORRIGENT CORPORATION,

Patent Owner

PETITION FOR INTER PARTES REVIEW

OF U.S. PATENT NO. 9,118,602

Case No.: IPR2023-00447

TABLE OF CONTENTS

I. INTRODUCTION 1

II. GROUNDS FOR STANDING 2

III. REQUESTED RELIEF AND REASONS FOR REQUESTED RELIEF 2

IV. OVERVIEW OF THE ’602 PATENT 2

A. Summary of the ’602 Patent 2

B. Priority Date 5

V. STATUTORY GROUNDS FOR CHALLENGES 5

VI. LEVEL OF ORDINARY SKILL IN THE ART 6

VII. CLAIM CONSTRUCTION 6

VIII. THE ART PRIOR TO THE ’602 PATENT 7

A. Raz 7

B. Ferguson 10

IX. GROUND 1: Claims 1-13, 15-24 and 26 are unpatentable as OBVIOUS OVER RAZ. 12

A. Claim 1 12

B. Claim 2 26

C. Claim 3 26

D. Claims 4 and 16 27

E. Claims 5 and 17 29

F. Claims 6 and 18 30

G. Claims 7 and 19 31

H. Claim 8 33

I. Claims 9 and 20 33

J. Claims 10 and 21 35

K. Claims 11 and 22 36

L. Claim 12 38

M. Claims 13 and 23 39

N. Claim 15 40

O. Claim 24 48

P. Claim 26 49

X. GROUND 2: CLAIMS 1-26 ARE UNPATENTABLE AS OBVIOUS OVER THE COMBINATION OF RAZ, FERGUSON AND THE KNOWLEDGE OF A POSA. 52

XI. OBJECTIVE INDICIA OF NONOBVIOUSNESS 60

XII. DISCRETIONARY DENIAL UNDER § 325(D) OR § 314 IS NOT WARRANTED 61

XIII. MANDATORY NOTICES UNDER 37 C.F.R. § 42.8 65

A. Real Party-in-Interest 65

B. Related Matters 65

C. Lead and Back-up Counsel and Service Information 66

XIV. CONCLUSION 66

APPENDIX A – CLAIM LISTING A-1

TABLE OF AUTHORITIES

Page(s)

Cases

In re Apple Inc.,
979 F.3d 1332 (Fed. Cir. 2020) 63

Apple Inc. v. Fintiv, Inc.,
IPR2020-00019, Paper 11 (PTAB March 20, 2020) 62

Apple Inc. v. Maxell, Ltd.,
IPR2020-00204, Paper 11 (PTAB June 19, 2020) 65

Corrigent Corp. v. Arista Networks, Inc.,
Case No. 1:22-cv-497 (D. Del.).....65

Corrigent Corp. v. Cisco Systems, Inc.,
Case No. 6:22-cv-396 (W.D. Tex.).....65

Dish Network LLC v. Broadband iTV, Inc.,
IPR2020-01359, Paper 15 (PTAB Feb. 12, 2021).....62

General Plastic Industrial Co., Ltd. v. Canon Kabushiki Kaisha
IPR2016-01357, Paper 19 (PTAB Sept. 6, 2017).....61

PEAG LLC v. Varta Microbattery GMBH,
IPR2020-01214, Paper 8 (PTAB Jan. 6, 2021) 64

Petroleum Geo-Services Inc. v. WesternGeco LLC,
IPR2014-01478, Paper 18 (PTAB Mar. 17, 2015).....60

Phillips v. AWH Corp.,
415 F.3d 1303 (Fed. Cir. 2015) (en banc) 6

Sand Revolution II LLC v. Continental Intermodal Group-Trucking LLC,
IPR2019-01393, Paper 24 (PTAB June 16, 2020) 62, 63, 64, 65

Sega of Am., Inc. v. Uniloc USA, Inc.,
IPR2014-01453, Paper 11 (PTAB Mar. 10, 2015).....60

Statutes

35 U.S.C. § 102(e)(2) 5

35 U.S.C. § 103(a) 5

35 U.S.C. § 112 ..... 28, 33

35 U.S.C. §§ 311, 314(a) 1

35 U.S.C. §314(a) 61

35 U.S.C. § 315(e)(2) 64

35 U.S.C. § 316(a)(11) 63

35 U.S.C. §325(d) 61

Other Authorities

37 C.F.R. § 42.8 65

37 C.F.R. § 42.8(b)(1) 65

37 C.F.R. § 42.100 1

37 C.F.R. § 42.100(b) 6

PETITIONERS' EXHIBIT LIST

1001	U.S. Patent No. 9,118,602 (the '602 Patent)
1002	Prosecution History of the '602 Patent
1003	Curriculum Vitae of Samrat Bhattacharjee
1004	Declaration of Dr. Samrat Bhattacharjee, dated January 9, 2023
1005	Defendant Cisco Systems, Inc.'s Opening Claim Construction Brief, Docket No. 44 in *Corrigent Corp. v. Cisco Systems, Inc.*, Case No. 6:22-cv-396 (W.D. Tex.)
1006	U.S. Patent No. 7,466,697 ("Raz")
1007	U.S. Patent No. 7,277,386 ("Ferguson")
1008	Request for Comments 3031, *Multiprotocol Label Switching Architecture*, Rosen, E. et al., January 2001 ("RFC 3031")
1009	Nadeau, Thomas D., Multi-Protocol Label Switching, MPLS Network Management, 2003
1010	Request for Comments 3209, *RSVP-TE: Extensions to RSVP for LSP Tunnels*, Awduche, D. et al., December 2001 ("RFC 3209")
1011	Scheduling Order, Docket No. 37 in *Corrigent Corp. v. Cisco Systems, Inc.*, Case No. 6:22-cv-396 (W.D. Tex.) (D.I.37)
1012	Order Setting *Markman* Hearing, Docket No. 46 in *Corrigent Corp. v. Cisco Systems, Inc.*, Case No. 6:22-cv-396 (W.D. Tex.)
1013	Defendant Cisco Systems, Inc.'s Opposed Motion to Transfer Venue to the Northern District of California Under 28 U.S.C. 1404(a), Docket No. 39 in *Corrigent Corp. v. Cisco Systems, Inc.*, Case No. 6:22-cv-396 (W.D. Tex.)
1014	Federal Case Management Statistics for the Western District of Texas, as of June 30, 2022
1015	Complaint, Docket No. 1 in *Corrigent Corp. v. Arista Networks, Inc.*, Case No. 1:22-cv-497 (D. Del.)
1016	Docket Report for *Corrigent Corp. v. Arista Networks, Inc.*, Case No. 1:22-cv-497 (D. Del.) as of January 2, 2023

1017	Interim Procedure for Discretionary Denials in AIA Post-Grant Proceedings with Parallel District Court Litigation, Vidal, K., United States Patent and Trademark Office, June 21, 2022
1018	U.S. Patent No. 6,499,061 ("Benayoun")
1019	U.S. Patent No. 7,606,235 ("Ayyangar")

I. INTRODUCTION

Pursuant to 35 U.S.C. §§ 311, 314(a), and 37 C.F.R. § 42.100, Cisco Systems, Inc. ("Petitioner") respectfully requests that the Board review and cancel Claims 1-26 (the "Challenged Claims") of U.S. 9,118,602 ("the '602 Patent," EX1001). The '602 Patent claims methods and apparatuses for "assigning and utilizing an Ethernet physical data port in an Ethernet Link Aggregation Group (LAG) in a Multi-Protocol Label Switching ["MPLS"] network." EX1001, Col. 2:30-34. But the claimed methods and apparatuses would have been obvious to a person of ordinary skill in the art ("POSA") well before the '605 Patent's earliest priority date.

For example, U.S. Patent No. 7,466,697 ("Raz," EX1006) discloses the use of Ethernet physical data subports in an Ethernet LAG within a Label Switching Router ("LSR") to communicate high-speed packet streams in an MPLS network. The disclosures of Raz, along with the knowledge of a POSA, render the Challenged Claims obvious, as explained below in Ground 1.

Further, U.S. Patent No. 7,277,386 ("Ferguson," EX1007) discloses techniques for communicating packets between switches and routers in an MPLS network. The combination of Raz and Ferguson likewise renders the Challenged Claims obvious, as explained below in Ground 2.

Because the Challenged Claims recite techniques that were already well-known in the art, Petitioner asks the Board to institute trial and that the Director cancel the Challenged Claims as unpatentable.

II. GROUNDS FOR STANDING

Petitioner certifies that the '602 Patent is available for *inter partes* review and that Petitioner is not barred or estopped from requesting *inter partes* review challenging the patent claims on the grounds identified in this Petition.

III. REQUESTED RELIEF AND REASONS FOR REQUESTED RELIEF

Petitioner asks that the Board institute a trial for an *inter partes* review of the Challenged Claims, and that the Director cancel them as unpatentable. The Challenged Claims would have been obvious to a POSA and are therefore unpatentable. The analysis demonstrating the obviousness of the Challenged Claims is set forth in the below sections of this Petition and supported by the declaration of Petitioner's expert, Dr. Samrat Bhattacharjee. EX1004, ¶¶1-11; EX1003.

IV. OVERVIEW OF THE '602 PATENT

A. Summary of the '602 Patent

The '602 Patent relates "generally to communication networks, and particularly to methods and systems for performing link aggregation ["LAG"] in tunneled networks," which is a technology discussed in Dr. Bhattacharjee's declaration. EX1001, Col. 1:19-21; EX1004, ¶¶21-55. The background section of

the patent explains that LAG is a well-known "technique by which a group of parallel physical links between two endpoints in a data network can be joined together into a single logical link." EX1001, Col. 2:2-4; EX1004, ¶¶27-28. These groups of physical links are commonly referred to as "LAG groups." EX1001, Col. 2:4-5. "Traffic transmitted between the endpoints is distributed among the physical links in a manner that is transparent to the clients that send and receive the traffic." *Id.*, Col. 2:5-7.

One embodiment of the '602 Patent describes a "method for assigning and utilizing an Ethernet physical data port in an Ethernet Link Aggregation Group (LAG) in a Multi-Protocol Label Switching ("MPLS") network." EX1001, Col. 2:30-34. The background section of the patent likewise explains that MPLS was a well-known technique in which information packets flow along a label-switched path ("LSP") as LSRs pass them through a network. *Id.*, Col. 1:34-56; EX1004, ¶26. "The flow of packets along a label-switched path (LSP) under MPLS is completely specified by the label applied at the ingress node of the path." EX1001, Col. 1:40-42. As such, "an LSP can be viewed as a tunnel through the network." *Id.*, Col. 1:42-43; EX1004, ¶26. Figure 1A of the '602 Patent (reproduced and annotated below) schematically illustrates an MPLS communication network such as the one disclosed in the '602 Patent:

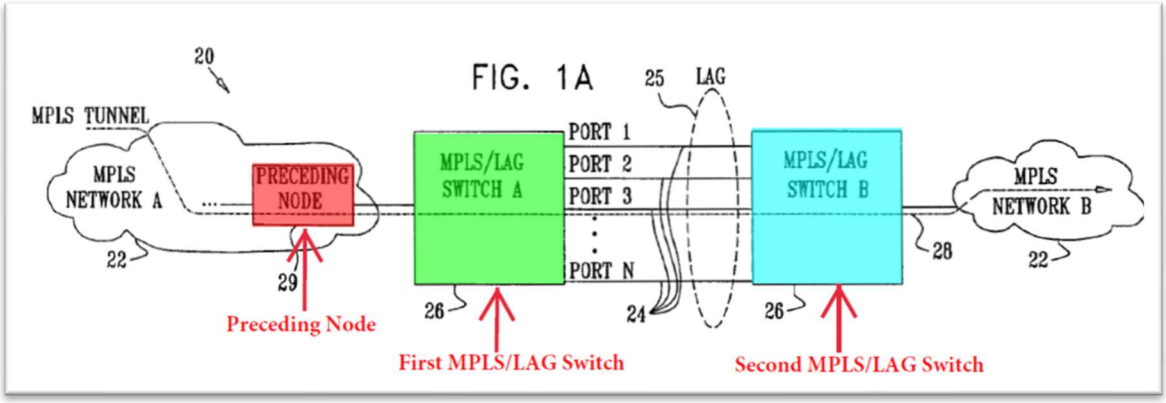

Figure 1A of the '602 Patent (Annotated)

EX1001, Figure 1A; EX1004, ¶28.

The alleged invention of the '602 Patent "includes the steps of, selecting, by a first MPLS/LAG switch (highlighted above in green], from a plurality of physical data ports in said first MPLS/LAG switch, a single physical tunnel port which meets a bandwidth requirement of a network tunnel, wherein said single physical tunnel port has a port serial number." EX1001, Col. 2:34-39; *see id.*, Cols. 5:64-7:32, EX1004, ¶29. The single physical tunnel port is then assigned by the first MPLS/LAG switch to the network tunnel. EX1001, Col. 2:39-41. The first MPLS/LAG switch then prepares a "data packet label by which said single physical tunnel port may be identified." *Id.*, Col. 2:41-43. The first MPLS/LAG switch sends the data packet label to a preceding node (highlighted above in red) that applies the label to incoming data packets. *Id.*, Col. 6:5-8; EX1004, ¶¶29-33. When the first MPLS/LAG switch receives "a data packet including said data packet label," the MPLS/LAG switch performs a "switching" of the "data packet to said single

physical tunnel port according to said serial port number." EX1001, Col. 2:44-47. The first MPLS/LAG switch then sends the data packet to a second MPLS/LAG switch (highlighted above in blue) via the "physical tunnel port." *Id.*, Col. 2:47-49.

B. Priority Date

Solely for the purposes of this Petition, Petitioner assumes that the priority date for the '602 Patent is May 6, 2005, the filing date of the earliest application to which the '602 Patent claims priority. EX1004, ¶56.

V. STATUTORY GROUNDS FOR CHALLENGES

Ground #1: Claims 1-13, 15-24 and 26 of the '602 Patent are obvious under 35 U.S.C. § 103(a) over Raz in view of the knowledge of a POSA. Raz was filed on July 23, 2002, and issued on December 16, 2008. EX1006. Thus, Raz qualifies as prior art under at least pre-AIA 35 U.S.C. § 102(e)(2) because Raz issued from an application that was filed in the U.S. by someone other Ronen Solomon (named inventor on the '602 Patent) before the alleged invention of the subject matter claimed in the '602 Patent.

Ground #2: Claims 1-26 of the '602 Patent are obvious under 35 U.S.C. § 103(a) over Raz in view of Ferguson, which was filed on November 12, 2002, and issued on October 2, 2007. EX1007. Thus, Ferguson qualifies as prior art under at least pre-AIA 35 U.S.C. § 102(e)(2) because Ferguson issued from an application

that was filed in the U.S. by someone other than Mr. Solomon before the alleged invention of the subject matter claimed in the '602 Patent.

VI. LEVEL OF ORDINARY SKILL IN THE ART

As of May 6, 2005, a POSA would have had a bachelor's degree in computer science, computer engineering or an equivalent, as well as two years of professional experience, and a POSA would have had a working knowledge of hardware and software for packet-switched networking, MPLS and LAG. EX1004, ¶¶57-58. Lack of work experience can be remedied by additional education and vice versa. *Id.*, ¶57.

VII. CLAIM CONSTRUCTION

In *inter partes* review, claim terms must be given their ordinary and customary meaning as understood by a POSA at the time of the invention in light of the specification and the prosecution history pertaining to the patent. *See* 37 C.F.R. § 42.100(b); *Phillips v. AWH Corp.*, 415 F.3d 1303, 1312-13 (Fed. Cir. 2015) (en banc). Terms not specifically construed have their plain and ordinary meaning as understood by a POSA. Here, Petitioners assert that the claim terms in the

Challenged Claims do not require construction for the purpose of evaluating the prior art in this Petition.[1] EX1004, ¶77.

VIII. THE ART PRIOR TO THE '602 PATENT

A. Raz

Raz discloses "[a] subport forwarding and provisioning mechanism whereby a plurality of subports [within a LSR] implemented using slower speed processors are used to perform the packet processing for a higher speed packet stream." EX1006, Abstract, Cols. 1:66-2:3, 2:41-51, 6:24-27; EX1004, ¶¶59-66. "Outbound packets are assigned a subport based on their MPLS labels." EX1006, Abstract, Cols. 2:9-10, 6:34-35. "Once assigned, the packets are forwarded to a particular subport." *Id.*, Abstract, Cols. 2:10-11, 6:35-36. "The output of all the subports is aggregated and combined into a single high speed packet stream and transmitted over the link." *Id.*, Cols. 2:11-13, 6:36-38.

"To aid in understanding the invention, the example LSR shown [below in Figure 1] comprises a 10G interface that is composed of ten individual 1G packet streams." EX1006, Col. 7:7-9; EX1004, ¶61. "The ten subports [highlighted below

[1] Petitioner has proposed certain claim constructions in the related litigation between Petitioner and Patent Owner. EX1005. However, Petitioner does not believe such constructions are necessary to resolve the issues addressed by this Petition.

in yellow] are provided wherein each is adapted to handle a 1G packet stream." EX1006, Col. 7:9-10. "The overall aggregate speed, however, is 10G." *Id.*, Col. 7:10-11.

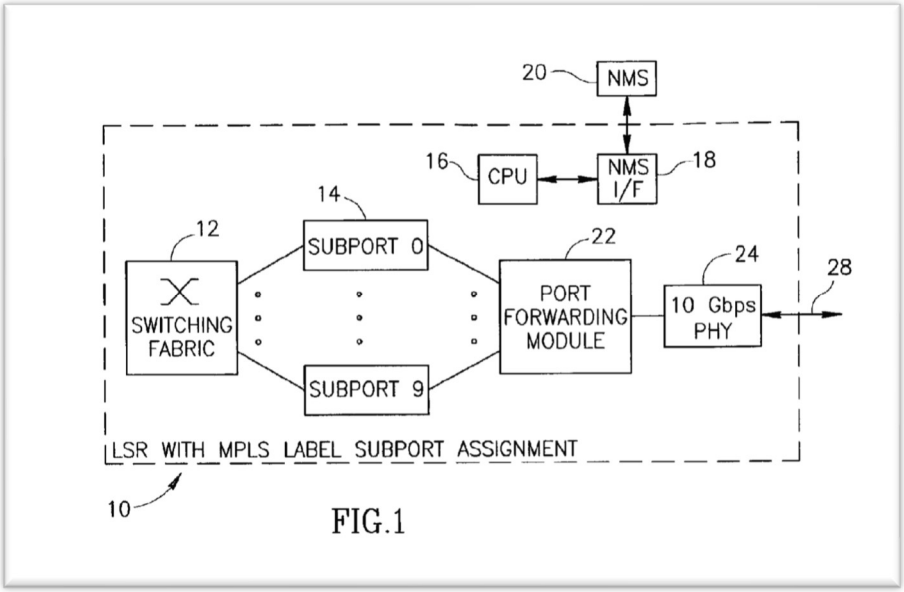

Figure 1 of Raz

"In accordance with the invention, the assignment of traffic to 1G subports is based on LSPs." EX1006, Col. 7:17-18; EX1004, ¶62. "Thus, the MPLS label is used in order to assign an incoming packet to one of the subports." EX1006, Col. 7:18-19. "Note that it is the downstream (i.e. receiving) node that determines the subport it wants to receive the LSP on." *Id.*, Col. 7:26-27. "This decision is communicated to the upstream (i.e. sending) node via the label that is assigned to the LSP." *Id.*, Col. 7:27-29.

Raz provides an example regarding "two LSRs, LSR A and LSR B, each with 10 subports wherein each subport is mapped to an 8K range of labels." EX1006, Col. 7:30-32; EX1004, ¶¶63-64. "An LSP is to be provisioned from LSR A to LSR B." EX1006, Col. 7:32-33. In order to establish the LSP, "LSR B decides to accept the LSP on subport 3 and thus assigns a label comprising an indication that subport 3 was selected." *Id.*, Col. 7:33-36. "The label is communicated to LSR A which now knows that the output subport should be subport 3 (i.e. the same subport is provisioned)." *Id.*, Col. 7:36-38. "When a packet for the provisioned LSP is received over a link connected to LSR A, it is forwarded to subport 3 and subsequently out over the 10G link to LSR B with the previously assigned label indicating subport 3." *Id.*, Col. 7:39-42. "The port forwarding module in LSR B examines the label in the received packet and in response thereto forwards the packet to subport 3 for packet processing." *Id.*, Col. 7:42-45.

Raz explains that its method and system are designed to "handle wide connections" that "require a relatively large amount of [Committed Information Rate] bandwidth." EX1006, Col. 10:60-63; EX1004, ¶¶65-66. "The invention provides a scheme for allocating LSP bandwidth to subports that helps in solving the problem described above in a way that provides a tradeoff between leaving subports empty for wide LSPs and spreading traffic between subports for best utilizing the bandwidth of the link (e.g., for EIR traffic)." EX1006, Col. 11:3-8. "The central idea

is to leave one or more subports empty (i.e. no bandwidth used) in the event a wide connection is to be allocated." *Id.*, Col. 11:8-10. "The allocated bandwidth, however, is still distributed among the subports in such a way that EIR traffic is supported." *Id.*, Col. 11:10-12.

B. Ferguson

Ferguson is a prior art system relating to "distribution of traffic within computer networks." EX1007, Col. 1:6-7; EX1004, ¶¶67-76. "The invention is directed to techniques for distributing label switched packets, such as multiprotocol label switched (MPLS) packets, associated with a common label switched path (LSP)." EX1007, Col. 1:57-60. "The techniques may, for example, be used to load balance label switched packets of an LSP across an aggregated link having two or more logically associated physical interconnects." *Id.*, Col. 1:60-63. "In addition, the techniques may be used to distribute label switched packets of a common LSP across multiple data paths within a network device, such as a router." *Id.*, Col. 1:63-66; *see id.*, Cols. 1:67-2:3, 5:63-6:6, 8:60-67 (noting use of techniques within a switch); EX1004, ¶¶67-68.

In Ferguson, "a method comprises receiving a data unit from a network device, determining a type of communication protocol for the data unit, and selecting a label based on the type of communication protocol." EX1007, Col. 2:19-22; *see* EX1007, Col. 2:54-65; EX1004, ¶69. "The method further comprises pre-pending

the selected label to the data unit to form a label switched packet in accordance with a label switching protocol, and forwarding the packet along a label switched path in accordance with the label." EX1007, Col. 2:22-26.

Figure 1 (below) illustrates an example embodiment used to communicate information between "customer networks" 4A and 4B through "provider network 6" utilizing "customer edge ('CE') router[s]" 8A and 8B and "provider edge ('PE') router[s]" 10A and 10B. EX1007, Col. 3:36-39; EX1004, ¶¶70-74. "In general, the devices of system 2, i.e., CE routers 8, PE routers 10, and intermediate routers (not shown) within provider network 6, utilize MPLS labels within pre-allocated ranges to convey protocol information for the payloads of the MPLS packets." EX1007, Col. 4:9-13. "In other words, the devices assign MPLS labels of the pre-allocated ranges to the MPLS packets based on the type of payloads carried by the MPLS packets." *Id.*, Col. 4:13-16. "The devices may make use of this protocol information to facilitate distribution of the MPLS packets across multiple paths, e.g., multiple physical interconnects of an aggregated link." *Id.*, Col. 4:16-19; *see id.*, Cols. 1:11-13 ("In other words, the label associates the packet with an LSP, and carries the information that determines which path a packet should take."); 3:36-53, 5:61-63.

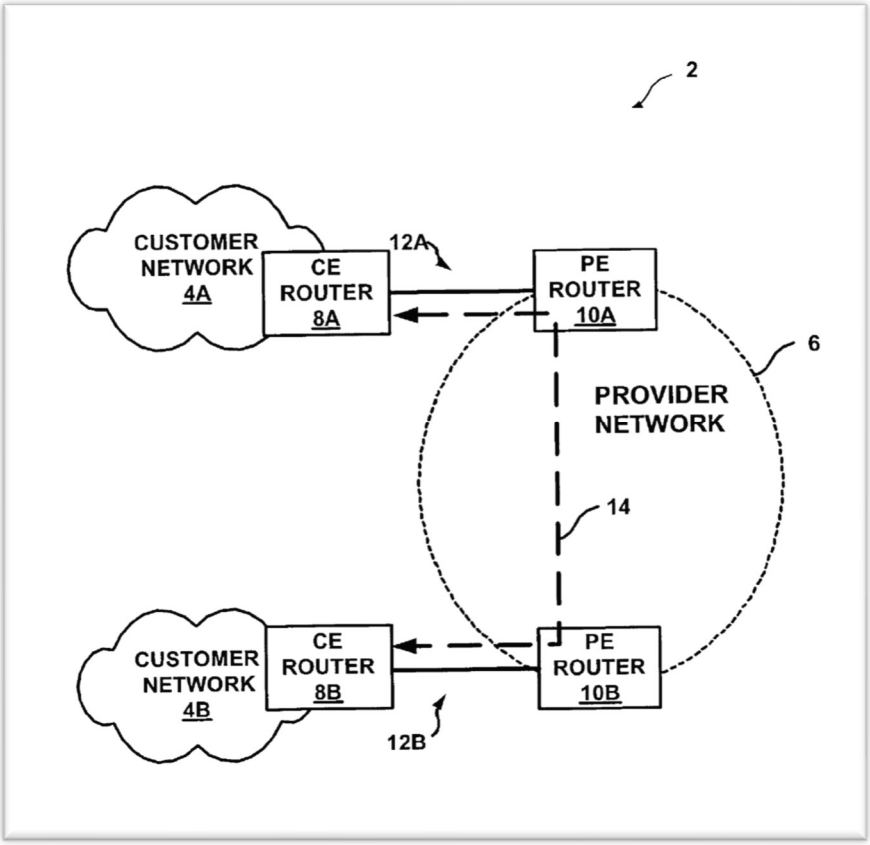

Figure 1 of Ferguson

IX. GROUND 1: CLAIMS 1-13, 15-24 AND 26 ARE UNPATENTABLE AS OBVIOUS OVER RAZ.

Raz (which was not considered during prosecution of the '602 Patent) in combination with the knowledge of a POSA renders Claims 1-13, 15-24 and 26 obvious. EX1004, ¶¶78-239.

A. Claim 1

[1.0] A method for assigning and utilizing an Ethernet physical data port in an Ethernet Link Aggregation Group (LAG) in a Multi-Protocol Label Switching (MPLS) network, the method comprising the steps of:

Element [1.0] is a preamble stating that the claim covers a method for utilizing an Ethernet physical data port in an Ethernet LAG in a MPLS network. EX1001, Col. 9:23-26. To the extent this preamble is limiting, it is taught and rendered obvious by Raz. EX1004, ¶¶79-83.

First, Raz teaches the communication of packets in a MPLS network, as shown below in the highlight in Figure 1. EX1006, Abstract ("Outbound packets are assigned a subport based on their MPLS labels."); *see id.*, Cols. 1:40-55, 7:7-29, 9:9-48, 11:3-12, 14:30-32, 14:50-52, 16:63-65, 17:14-16; EX1004, ¶80.

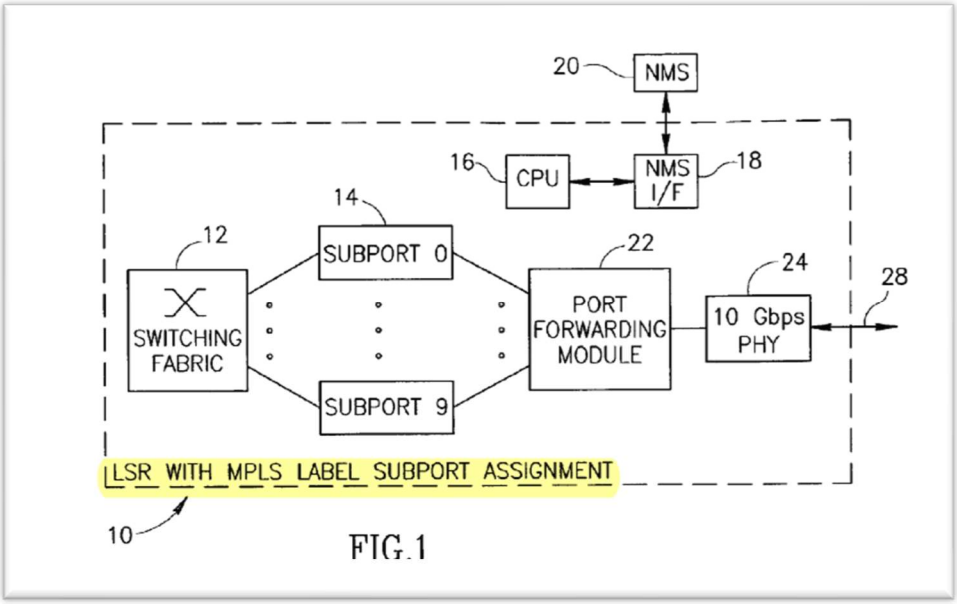

Figure 1 of Raz (Annotated)

Second, Raz discloses the use of link aggregation to transport high-speed network traffic within the LSRs in an MPLS network. EX1004, ¶81. Within the LSRs, individual packets from a high-speed data stream are assigned to one of a

plurality of subports for transportation through the LSR and then re-aggregated into the high-speed packet stream before being forwarded to the next node in a network (such as the next LSR). EX1006, Col. 2:41-51; *see id.*, Cols. 2:52-67, 6:34-45. Figure 1 of Raz (shown below) provides an example of ten subports (Subport 0-Subport 9) used to implement link aggregation within an LSR in an MPLS environment:

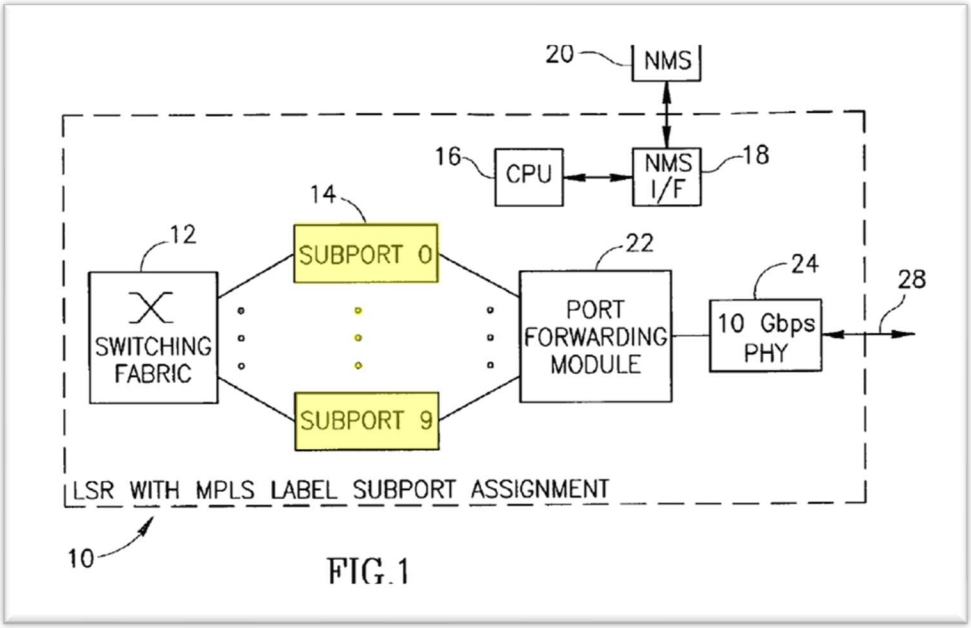

Figure 1 of Raz (Annotated)

EX1004, ¶81. The specification of Raz explains that the link aggregation is used to transport a high-speed packet stream through a plurality of subports of lesser speed within a LSR. EX1006, Col. 7:7-16 ("The ten subports are provided wherein each is adapted to handle a 1G packet stream. The overall aggregate speed, however, is 10G."); *see id.*, Cols. 9:9-12, 14:19-22, 15:32-35, 16:41-53, 17:62-18:7, 18:39-42,

19:3-7. Further, Raz discloses that its invention could be implemented in Ethernet networks, and it identifies transmission speeds used by Ethernet networks (e.g., 1G and 10G). *Id.*, Cols. 1:16-19, 2:28-31, 4:52, 13:16-19, 14:42-44, 15:56-58. Thus, a POSA would have understood that Raz discloses Ethernet subports in an Ethernet LAG. EX1004, ¶¶81-82.

While Raz discusses the utilization of subports in a LAG within a LSR to communicate high-speed packet streams in an MPLS network, a POSA similarly would have known to use Ethernet physical data ports of a router or switch in an Ethernet LAG to communicate high-speed packet streams in a MPLS network. EX1004, ¶82. The concept of using aggregation to communicate individual packets of a high-speed packet stream through subports *within* a LSR also applies to communicating individual packets through Ethernet physical data ports *used to connect different* routers or switches in a MPLS network. *Id.* Packet streams are communicated within a LSR in the same way as they are communicated between routers and switches. *Id.* In either case, there is a desire to identify and assign a path that will have sufficient bandwidth to accommodate packets within a high-speed stream. *Id.* The teachings of Raz thus would have been directly applicable to communications between routers or switches in an Ethernet LAG in a MPLS network. *Id.*

[1.1] assigning, by a first MPLS/LAG switch, a single physical tunnel port of a LAG to a network tunnel, wherein the single physical tunnel port of the LAG meets a bandwidth requirement of the network tunnel, and wherein said single physical tunnel port of the LAG has a port serial number;

Element [1.1] relates to the assignment of a physical tunnel port of a LAG to a network tunnel, where the physical tunnel port meets certain bandwidth requirements and has a port serial number. EX1001, Col. 9:27-32. This element is taught and rendered obvious by Raz. EX1004, ¶¶84-92.

Raz teaches the assignment of one subport of a LAG to a LSP within a LSR to communicate packets in a high-speed packet stream. EX1004, ¶¶85-86. For example, Raz states that "[a] diagram illustrating an example LSR with label based **subport assignment** constructed in accordance with a first embodiment of the present invention is shown in [Figure] 1 [below]." EX1006, Col. 6:65-67 (emphasis added); *see id.*, Cols. 7:17-19 ("In accordance with the invention, the assignment of traffic to 1G subports is based on LSPs. Thus, the MPLS label is used in order to assign an incoming packet to one of the subports."), 7:26-27, 3:1-15.

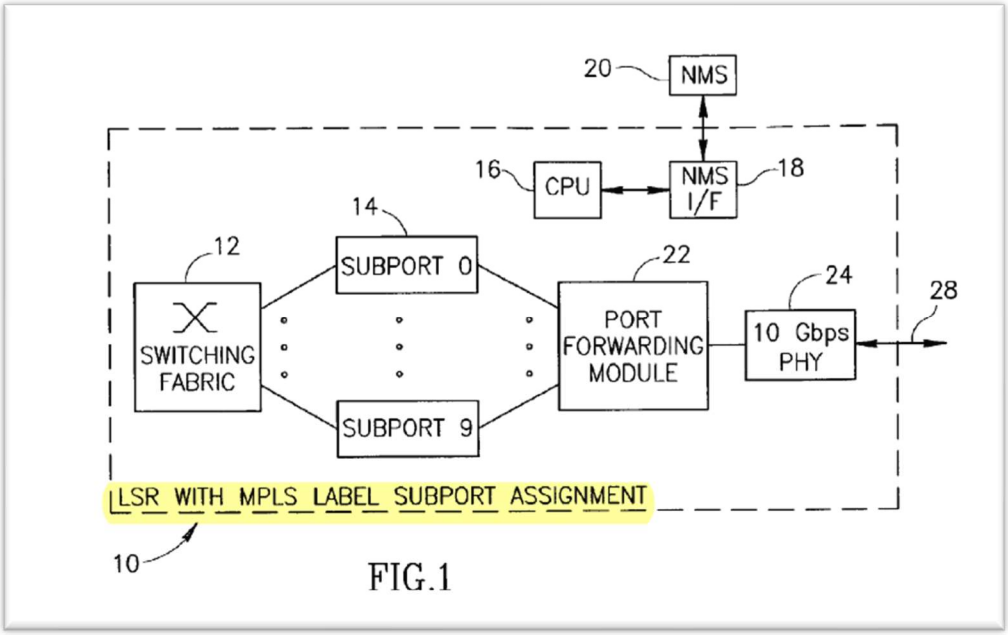

Figure 1 of Raz (Annotated)

Further, Raz explains that a LSR "functions to perform the assignment of subports to LSPs in response to LSP setup requests.…Once a subport is assigned, a label is generated so as to indicate the subport assignment." EX1006, Col. 7:65-8:13; *see id.*, Cols. 7:30-38 (providing example in which the assignment of subport 3 of a LAG to a network tunnel is performed by LSR B), 7:11-14, 9:41-48; EX1004, ¶86. The LSR that performs the subport assignment corresponds to the claimed first MPLS/LAG switch, and the LSP corresponds to the claimed network tunnel. EX1004, ¶86. It would have been common knowledge to a POSA that a LSP could be used to implement a network tunnel. *See* EX1008, Section 3.27.3 ("It is possible to implement a tunnel as a LSP, and use label switching rather than network layer encapsulation to cause the packet to travel through the tunnel."); EX1004, ¶86.

A POSA also would have known that the subport within the LSR is a physical subport. EX1004, ¶87. Raz states that ten 1G subports form a 10G interface of the LSR. EX1006, Cols. 7:7-29, 8:40-55, 9:29-40; 13:1-19. A POSA would have understood that each of the 1G subports is implemented as a physical subport on the LSR through which a 1G packet stream travels. EX1004, ¶87.

In addition, Raz explains that the assigned subport meets a bandwidth requirement of the LSP (i.e., the claimed network tunnel). EX1004, ¶88. Raz explains that "the invention comprises an algorithm for allocating subport bandwidth to LSPs." EX1006, Col. 2:23-25; *see id.*, Cols. 11:3-12 ("The central idea is to leave one or more subports empty (i.e. no bandwidth used) in the event a wide connection is to be allocated."), 7:7-26, 11:13-12:9, Figure 5. Further, Claims 4-6, 20-22 and 37-39 of Raz require that the assigned subport be "capable of handling" a traffic stream of a certain bandwidth. *Id.*, Cols. 14:33-41, 15:47-55, 16:65-17:6.

Raz also discloses that the assigned subport has a serial number. EX1004, ¶89. In discussing Figure 4, Raz explains that the MPLS label contains bits that "indicate the subport," which a POSA would have understood to mean that the subport has a serial number that is indicated by the bits. EX1006, Col. 9:41-48, Figure 4; *see id.*, Figure 1 (identifying subports numbered 0-9); EX1004, ¶89. A POSA would have understood that a serial number is a numerical identifier for the subport, and thus the series of bits disclosed in Raz indicate a serial number. EX1004, ¶89.

Moreover, while Raz describes forwarding packets of a high-speed packet stream by assigning a subport within a LSR, a POSA would have understood that the method of Raz also could have been used for communicating packets from one MPLS/LAG switch to another MPLS/LAG switch. EX1004, ¶¶90-91. A POSA would have considered the LSR in Raz to be a type of MPLS/LAG switch that supports MPLS and can implement a LAG. *See* EX1009 at 7 ("A label switching router is any router or switch that supports the forwarding of MPLS-encapsulated packets based solely on the incoming interface and the information in the shim header."); EX1006, Col. 7:7-16 (LSR can implement LAG in a MPLS network); EX1004, ¶90. The LSR in Raz identifies a subport with sufficient bandwidth to meet the requirements of a LSP (which correlates to the claimed network tunnel) and assigns that subport to communicate packets from a high-speed packet stream. EX1004, ¶91. The same principles and benefits would have applied to forwarding packets between MPLS/LAG switches because packet streams are communicated between routers and switches in the same way as they are communicated within a LSR. *Id.*

A POSA would have known that the technique of assigning a single physical tunnel subport within an LSR to a LSP to ensure sufficient bandwidth to communicate a packet stream would also be effective to communicate the packet stream between MPLS/LAG switches. EX1004, ¶91. As such, Raz would have

motivated a POSA to assign a physical tunnel port of the MPLS/LAG switch to a network tunnel in order to provide a tunnel pathway that can meet the bandwidth requirements "in the event a wide connection is to be allocated" for forwarding packets in a high-speed packet stream. EX1006, Col. 11:3-12; *see id.*, Cols. 2:23-25, 7:7-16, 7:22-26, 11:13-12:9, Figure 5; EX1004, ¶91.

[1.2] dedicating a sub-set of bits in a data packet label prepared by the first MPLS/LAG switch to encode said port serial number of said single physical tunnel port of the LAG into the data packet label;

Element [1.2] recites using bits in a data packet label to encode the port serial number of the physical tunnel port. EX1001, Col. 9:33-36. This element is taught and rendered obvious by Raz. EX1004, ¶¶93-96.

Raz discusses dedicating a sub-set of bits in MPLS label 140 (i.e. a data packet label) prepared by an LSR to encode the subport serial number of a physical subport of the LAG into the label. EX1004, ¶94. Raz provides two examples of a sub-set of bits in a data packet label being dedicated to the identification of the subport of a LAG through which a packet should be sent. EX1006, Col. 9:41-58, Figures 3-4. In the first example discussed in the block quote below, LSR C (which corresponds to the first MPLS/LAG switch in that example) dedicates "bits 16 to 13 [to] indicate the subport" (which is subport 1) of a LAG through which a packet should be sent from LSR B to LSR C in Figure 3 of Raz. *Id.*; EX1004, ¶94. In the second example, LSR B (which corresponds to the first MPLS/LAG switch in that example) dedicates

bits in the label provides to LSR A to identify the subport (which is subport 0) of a LAG through which a packet should be sent from LSR A to LSR B in Figure 3. *Id.*

> Consider an LSP to be setup through LSR A to LSR C. When the LSP is signaled, the CAC in LSR C decides to provision the LSP on subport 1 and therefore assigns the label 0x22003. With reference to [Figure 4], each label 140 comprises 20 bits or 5 nibbles where the first three bits indicate 1 of 8 line interface cards, **bits 16 to 13 indicate the subport** and bits 12 to 0 indicate the actual label. In this example, the label 0x22003 indicates line interface card 1, subport 1 and label 3.
>
> The label generated by LSR C is communicated to LSR B which tells LSR B that the outbound subport (to LSR C) should be subport 1. **The CAC in LSR B determines that the best subport for receiving the LSP is on subport 0 on the inbound link and therefore assigns a label of 0x40005. This label indicates line interface card 2, subport 0 and label 5.** The label is communicated to LSR A who then knows by the output label that it is to assign the LSP to subport 0. The provisioned path indicating the LSR ports and subports is represented by the dotted line 53.

EX1006, Col. 9:41-58 (emphasis added), Figures 3-4. A POSA would have understood that the inclusion of the bits in a data packet label by the LSR to indicate the subport through which a packet should be sent constitutes encoding the subport serial number in the label. EX1004, ¶94. As discussed above for Element [1.1], a serial number is a numerical identifier for the subport, and the series of bits in the label is a serial number that is encoded because it has been put into the label in a format in which it can be used to identify the subport. *Id.*

Moreover, for similar reasons as those discussed above for Element [1.0] and [1.1], a POSA also would have been motivated to take Raz's disclosure of dedicating a sub-set of bits in MPLS label 140 to encode the serial number of a physical subport, and extend that to dedicating a sub-set of bits in an MPLS label to encode the serial number of the physical port of the MPLS/LAG switch to be used to forward packets through a network tunnel formed by the LSP. EX1004, ¶95; EX1006, Cols. 2:23-25, 7:7-16, 7:22-26, 11:3-12:9, Figure 5.

[1.3] sending, by said first MPLS/LAG switch, the data packet label, in which said port serial number of said single physical tunnel port is encoded, to a preceding node;

Element [1.3] recites sending the data packet label in which the port serial number is encoded to a preceding node upstream from the first MPLS/LAG switch. EX1001, 9:37-39. This element is taught and rendered obvious by Raz. EX1004, ¶¶97-101.

As discussed above for Element [1.2], Raz discloses encoding the serial number of a physical tunnel subport of the LAG into the label. EX1004, ¶98. Further, Raz explains that the label encoding the serial number of the subport is sent from an LSR that generates the label (which corresponds to the claimed first MPLS/LAG switch) to an "upstream" or preceding node:

> Note that it is the downstream (i.e. receiving) node that determines the subport it wants to receive the LSP on. **This decision is communicated to the upstream (i.e. sending) node via the label that is assigned to the LSP**.

EX1006, Col. 7:26-29 (emphasis added). In the example discussed in Column 7 of Raz, LSR B generates the label, and the label is sent to LSR A, which is the preceding node. EX1006, Col. 7:30-38; *see id.*, Cols. 8:4-10, 9:49-58; EX1004, ¶¶98-99.

Moreover, for the reasons discussed above for Elements [1.0]-[1.2], it would have been within the knowledge of a POSA to take the teaching of Raz that the label encoding the serial number of the subport is sent to a preceding node, and extend that to sending a label that encodes the serial number of a physical port of an MPLS/LAG switch to a preceding node in an MPLS network. EX1004, ¶100.

[1.4] receiving from the preceding node, by said first MPLS/LAG switch, a data packet comprising said data packet label, in which said port serial number of said single physical tunnel port is encoded; and

Element [1.4] relates to receiving the data packet at the first MPLS/LAG switch from the preceding node. EX1001, Col. 9:40-43. This element is taught and rendered obvious by Raz. EX1004, ¶¶102-105.

Raz discusses that a LSR corresponding to the claimed first MPLS/LAG switch receives a data packet from a previous node via the LSP. EX1006, Col. 7:39-45; *see id.*, Cols. 8:7-10, 9:29-58, Figures 3-4; EX1004, ¶103. For example, Claim 1 of Raz recites "forwarding inbound packets transmitted by said upstream node and **received over said communications link by said downstream node to a subport in accordance with the label associated with said inbound packet**." Exhibit 1006, Col. 14:23-26 (emphasis added). Further, as discussed above for Element [1.2], the packet has a data packet label in which the serial number of the physical tunnel subport is encoded. *Id.*, Col. 9:41-58; EX1004, ¶103.

As discussed above for Elements [1.0]-[1.3], it would have been within the knowledge of a POSA to treat packets received at a MPLS/LAG switch from a previous node in a MPLS network in the same way as packets received at the LSR in Raz. EX1006, Col. 11:3-12; *see id.*, Cols. 2:23-25, 7:7-16, 7:22-26, 11:13-12:9, Figure 5; EX1004, ¶104.

[1.5] sending said data packet from said first MPLS/LAG switch to a second MPLS/LAG switch via said single physical tunnel port having the port serial number encoded in the data packet label.

Element [1.5] relates to sending the data packet from the first MPLS/LAG switch to a second MPLS/LAG switch. EX1001, Col. 9:44-47. This element is taught and rendered obvious by Raz. EX1004, ¶¶106-109.

Raz discloses sending a data packet from a first MPLS/LAG switch to a second MPLS/LAG switch via a single physical tunnel port having the port serial number encoded in the data packet label. EX1004, ¶107. For example, LSR B in the example described in Column 7 of Raz is the LSR that generates the data packet label in which the port serial number (e.g., subport 3) is encoded, and it corresponds to the claimed first MPLS/LAG switch. EX1006, Col. 7:17-29; EX1004, ¶107. A POSA would have understood that the data packet in LSR B could be sent to another LSR (which would correspond to the claimed second MPLS/LAG switch) via a physical tunnel subport (subport 3) having the port serial number encoded in the data packet label. EX1006, Col. 7:39-45; *see id.*, Cols. 7:17-29, 9:29-58, 14:23-26, Figures 3-4; EX1004, ¶107.

As discussed above for Elements [1.0]-[1.4], it would have been within the knowledge of a POSA to communicate packets from a first MPLS/LAG switch to a second MPLS/LAG switch in a MPLS network in the same way as packets communicated from one LSR to another in Raz. EX1004, ¶108.

B. Claim 2

[2] The method of claim 1, further comprising the step of receiving from a preceding node located upstream from said first MPLS/LAG switch, by said first MPLS/LAG switch, a request message requesting configuration of said network tunnel, the message further requesting said data packet label associated with said network tunnel.

Claim 2 relates to a request message sent to the first MPLS/LAG switch from the preceding node. EX1001, Col. 9:48-53. This claim is taught and rendered obvious by Raz. EX1004, ¶¶110-1111. Raz discloses that "the assignment of subports to LSPs" is performed "in response to LSP setup requests." EX1006, Cols. 7:65-8:1; EX1004, ¶110. Further, Raz explains that a preceding node upstream from the MPLS/LAG switch (discussed above for Claim 1) sends a request message requesting configuration of the network tunnel (i.e. the LSP) and requesting that the data packet label associated with the network tunnel be sent to the preceding node so that the preceding node knows the subport to which the data packet should be routed through the network tunnel. EX1006, Col. 8:4-10; EX1004, ¶110.

C. Claim 3

[3] The method of claim 2, wherein said request message comprises an RSVP-TE PATH message augmented with a LABEL_REQUEST object.

Claims 3 recites that the request message is a RSVP-TE PATH message containing a LABEL_REQUEST object. EX1001, Col. 9:54-56. Claim 3 is obvious in view of Raz and the knowledge of a POSA. EX1004, ¶¶112-113.

First, a POSA would have found it obvious to use a RSVP-TE PATH message as Raz's request message. EX1004, ¶112. Raz states that "the principles of the present invention are described in the context of an MPLS based network employing any suitable routing such as OSPF-TE and signaling such as **RSVP-TE signaling**…." EX1006, Col. 6:46-50 (emphasis added); *see id.*, Cols. 1:36-39 ("LSPs may be setup using any suitable signaling protocol such as RSVP-TE …), 5:10, 6:46-50. It would have been obvious to a POSA that, if RSVP-TE signaling was used to implement the system of Raz, the message used to request the configuration of a network tunnel and seek transmission of the data packet label would have been a RSVP-TE PATH message. EX1004, ¶112.

Moreover, a POSA would have known that the RSVP-TE PATH request message would have contained a LABEL_REQUEST object. EX1004, ¶112. It was common (and known to a POSA) as of the May 6, 2005 priority date for the '602 Patent to use a LABEL_REQUEST object within a RSVP-TE PATH message to establish a LSP tunnel. *See* EX1010, Section 4.2.4; EX1004, ¶112.

D. Claims 4 and 16

[4] The method according to claim 3, wherein said request comprises an indication of a service property, and wherein said selecting comprises identifying a physical port in compliance with said service property.

[16] The apparatus according to claim 15, wherein the processor is configured to make said selection in compliance with a service property.[2]

Claims 4 and 16 recite that the request message identifies a service property and selects a physical port that complies with the service property. EX1001, Cols. 9:57-60, 10:65-67. As specified in Claims 5 and 17, a service property includes a guaranteed or peak bandwidth or a class of service. The elements of Claim 4 and 16 are obvious in view of Raz and the knowledge of a POSA. EX1004, ¶¶114-116, ¶¶183-185.

A POSA would have understood from the disclosure in Raz that it would have been obvious to include an indication of a service property in the request message received from the node preceding the MPLS/LAG switch. EX1004, ¶114, ¶183. For example, Raz explains that its "invention provides a scheme for allocating LSP bandwidth to subports that helps in solving the problem described above in a way that provides a tradeoff between leaving subports empty for wide LSPs and spreading traffic between subports for best utilizing the bandwidth of the link (e.g.,

[2] The references to "said selecting" or "said selection" in Claims 4 and 16, respectively, do not have an antecedent basis, and thus may not be definite under 35 U.S.C. § 112. Nonetheless, however those terms could be construed, the limitations of Claims 4 and 16 would be obvious for the reasons discussed herein. The same is true for the analysis of Claims 6-7 and 18-19. Claim 15 is addressed in Section IX.N.

for [Excess Information Rate] traffic)." EX1006, Col. 11:3-8. "The central idea is to leave one or more subports empty (i.e., no bandwidth used) in the event a wide connection is to be allocated." *Id.*, Col. 11:8-10. A POSA would have understood that Raz's focus on allocation of bandwidth to accommodate "a wide connection" is another way of saying that the request message has an indication of a service property (i.e., the amount of bandwidth needed to accommodate the wide connection). EX1004, ¶114, ¶183. Further, Raz provides an example of its system being used to provide a network tunnel for traffic requiring a Committed Information Rate ("CIR"), which a POSA would have understood to be a service property. EX1006, Cols. 10:60-11:2; *see id.*, Cols. 1:59-61, 4:40, 11:55-59, Figure 5.

Moreover, a POSA would have understood from these disclosures in Raz that the physical port of the MPLS/LAG switch is selected based on whether it can comply with the required service property. EX1004, ¶115, ¶184; EX1006, Cols. 10:60-11:12, 11:55-59. Raz provides the example that its system identifies and assigns a subport (or port) that has the bandwidth available to meet the required CIR service property. EX1006, Cols. 10:60-11:12.

Accordingly, Raz teaches the elements of Claims 4 and 16.

E. Claims 5 and 17

[5/17] The method (apparatus) according to claim 4 (16), wherein said service property comprises at least one of: a guaranteed bandwidth; a peak bandwidth; and a class of service.

Claims 5 and 17 recite that the service property comprises at least one of a guaranteed bandwidth, a peak band width and a class of service. EX1001, Cols. 9:61-63, 11:1-4. The elements of Claims 5 and 17 are obvious in view of Raz and the knowledge of a POSA. EX1004, ¶¶117-118, ¶¶186-187.

As discussed above for Claims 4 and 16, Raz discloses accommodation of "wide connections" that have a certain Committed Information Rate or CIR. EX1006, Cols. 10:60-11:2 *see id.*, Cols. 1:59-61, 4:40, 11:55-59, Figure 5; EX1004, ¶117, ¶186. A POSA would have understood that the CIR is a service property, and CIR is effectively a guaranteed bandwidth. EX1004, ¶117, ¶186. Further, it would have been within the knowledge of a POSA, in view of the discussion of bandwidth allocation in Raz, that the service property could also include a peak bandwidth and a class of service (i.e., the priority of processing the packets). *Id.*, ¶118, ¶187; *see* EX1006, Cols. 1:59-61, 4:40, 10:60-11:12, 11:55-59, Figure 5. It would have been commonly understood by a POSA that the service property also needed to include the peak bandwidth and class of service required to efficiently forward high-speed packet streams, such as videoconference data. EX1004, ¶118, ¶187.

F. Claims 6 and 18

[6] The method according to claim 1, wherein said selecting comprises selecting a single physical tunnel port having a maximum available bandwidth of said plurality of physical data ports.

[18] The apparatus according to claim 17, wherein said processor is configured to make said selection of a port having a maximum available bandwidth of the plurality of ports.

Claims 6 and 18 recite selecting the physical tunnel port having the maximum available bandwidth. EX1001, Cols. 9:64-67, 11:5-7. The elements of Claims 6 and 18 are obvious in view of Raz and the knowledge of a POSA. EX1004, ¶¶119-120, ¶¶188-189.

Raz teaches the selection of a single physical tunnel subport (or port) having the maximum available bandwidth from among the plurality of available physical data subports (or ports) of an MPLS/LAG switch. EX1006, Col. 11:13-59 (discussing method in Figure 5 and stating "the subport having the most free bandwidth is used"), 11:3-10; EX1004, ¶119, ¶188. Moreover, a POSA certainly would have understood to select the subport (or port) with the most available bandwidth to handle a high-speed packet stream requiring wide bandwidth. EX1004, ¶119, ¶188.

G. Claims 7 and 19

[7] The method according to claim 1, wherein said selecting comprises selecting a port having a minimum available bandwidth of said plurality of physical data ports which is not less than said bandwidth requirement of the network tunnel.

[19] The apparatus according to claim 17, wherein said processor is configured to make said selection of a port having a minimum available bandwidth of the plurality of ports which is not less than said bandwidth requirement of the network tunnel.

Claims 7 and 19 recite selecting the physical tunnel port whose minimum available bandwidth is not less than the bandwidth requirement of the network tunnel. EX1001, Cols. 10:7-4, 11:8-12. The elements of Claims 7 and 19 are obvious in view of Raz and the knowledge of a POSA. EX1004, ¶¶121-122, ¶¶190-191.

Raz discusses a situation where the minimum available bandwidth of each of its subports needs to be sufficient to handle the bandwidth of a wide connection. EX1006, Cols. 10:60-11:12; EX1004, ¶121, ¶190. Raz then discloses that its system is arranged to address this situation. EX1004, ¶121, ¶190. For example, the system in Raz may "leave one or more of the subports empty (i.e. no bandwidth used) in the event a wide connection is to be allocated." EX1006, Col. 11:8-10. Further, Raz explains that "bandwidth allocation method" shown in Figure 5 operates to ensure that a subport is selected that has a minimum available bandwidth available that is not less than the bandwidth required by the network tunnel (i.e., the LSP). *Id.*, Col. 11:13-59; EX1004, ¶121, ¶190. Moreover, it would have been straightforward to a POSA to select the subport (or port) with a minimum available bandwidth that is not less than the bandwidth required by the network tunnel to handle a high-speed packet stream. EX1004, ¶121, ¶190.

H. Claim 8

[8] The method according to claim 1, wherein said switching said data packet is according to a mapping function.[3]

Claim 8 recites that the data packets are switched according to a mapping function. EX1001, Col. 10:5-6. A POSA would have understood that Raz, in view of the knowledge of a POSA, renders it obvious to switch data packets "according to a mapping function." EX1004, ¶¶123-126. Raz discloses an example embodiment of its invention is which each of the LSRs has "10 subports wherein each subport is **mapped** to an 8K range of labels," and a POSA would have understood that the appropriate LSP for a high-speed packet stream is provisioned based on this mapping function. EX1006, Col. 7:30-48 (emphasis added); EX1004, ¶125.

I. Claims 9 and 20

[9] The method according to claim 1, wherein said preparing comprises inserting into said data packet label a set of bits that identify said single physical tunnel port; and wherein said switching said data packet comprises extracting said set of bits to determine an identity of said single physical tunnel port.[4]

---

[3] The reference to "said switching" in Claim 8 does not have an antecedent basis, and thus that term may not be definite under 35 U.S.C. § 112. Nonetheless, however that term could be construed, the limitations of Claims 8 would be obvious for the reasons discussed herein.

[4] The references to "said preparing" and "said switching" in Claim 9 do not have an antecedent basis, and thus that term may not be definite under 35 U.S.C. § 112. Nonetheless, however that term could be construed, the limitations of Claims 9 would be obvious for the reasons discussed herein.

[20] The apparatus according to claim 15, wherein said processor is configured to insert into said data packet label a set of bits which identify said single physical tunnel port; and wherein said mapper is configured to extract said set of bits to determine an identity of said single physical tunnel port.

Claims 9 and 20 recite that the set of bits identifying the physical tunnel port are inserted into and later extracted from the data packet label to help identify the physical tunnel port. EX1001, Cols. 10:7-12, 11:13-17. The elements of Claims 9 and 20 are obvious in view of Raz and the knowledge of a POSA. EX1004, ¶¶127-132, ¶¶192-195.

As explained above for Element [1.2], Raz discloses dedicating a sub-set of bits in MPLS label 140 (i.e. a data packet label) that identify a physical subport of the LAG. EX1006, Col. 9:41-58, Figure 4; EX1004, ¶129, ¶193. This is the same as inserting the bits into the data packet label. EX1004, ¶129, ¶193. Further, a POSA would have understood from Raz to extract the bits from the data packet label to identify the physical tunnel subport onto which to switch the data packets. *Id.*, ¶130, ¶193. Raz explains that its system "examines the label in the received packet" to determine the physical tunnel subport over which the packet should be forwarded. EX1006, Col. 7:39-45; *see id.*, Cols. 7:17-29, 9:29-58, Figures 3-4. Further, Claim 1 of Raz recites "forwarding inbound packets transmitted by said upstream node and received over said communications link by said downstream node to a subport in accordance with the label associated with said inbound packet." *Id.*, Col. 14:23-26.

A POSA would have understood from these disclosures that the bits within the data packet label are extracted to determine the identity of the single physical subport to use for transmission of the high-speed packet stream. EX1004, ¶130, ¶193. As discussed above, the bits in the data packet label identifies the physical tunnel subport to be used. EX1006, Col. 9:41-58, Figure 4.

Further, for the reasons discussed above for Claim 1, a POSA would have been motivated to extend the teaching of Raz to inserting a set of bits in an MPLS label and extracting bits from that label to identify the physical port of the MPLS/LAG switch to be used to forward packets through a network tunnel formed by the LSP. EX1004, ¶131, ¶194; *see* EX1006, Cols. 2:23-25, 7:7-16, 7:22-26, 11:3-12:9, Figure 5.

J. Claims 10 and 21

[10] The method according to claim 1, wherein said preparing comprises storing said data packet label along with an identifier of said single physical tunnel port in a memory, and wherein said switching said data packet comprises retrieving said identifier from said memory responsively to said data packet label.

[21] The apparatus according to claim 15, further comprising a memory, and wherein said processor is configured to store said data packet label along with an identifier of said single physical tunnel port in said memory, and wherein said mapper is configured to retrieve said identifier from said memory responsively to said data packet label.

Claims 10 and 21 recite storing the data packet label in a memory to they can later be retrieved from memory for use. EX1001, Cols. 10:13-18, 11:18-23. The

elements of Claims 10 and 21 are obvious in view of Raz and the knowledge of a POSA. EX1004, ¶¶133-135, ¶¶196-199. Raz states that its network device includes a memory. EX1006, Cols. 3:16-32, 12:30-41, 13:36-55. A POSA would have found it obvious and desirable to store the data packet label along with an identifier of the physical tunnel subport because label switching commonly requires storing a label and the associated subport (or port) to enable forwarding of received packets. EX1004, ¶133, ¶197. Further, a POSA would have understood it to be obvious that, when a data packet label was received, the stored identifier would be retrieved from the memory and used to forward that data packet to the identified physical tunnel subport. *Id.*

Further, as discussed in Claim 1, a POSA also would have been motivated to extend the teaching of Raz using a memory to identify the physical port of the MPLS/LAG switch to be used to forward packets through a network tunnel formed by the LSP. EX1004, ¶134, ¶198; *see* EX1006, Cols. 2:23-25, 7:7-16, 7:22-26, 11:3-12:9, Figure 5.

K. Claims 11 and 22

[11] The method according to claim 1, further comprising the steps of: selecting a backup port from among the plurality of physical data ports, different from said single physical tunnel port; and responsively to a service interruption of said single physical tunnel port, switching said data packet to said backup port and sending said data packet to said second MPLS/LAG switch via said backup port.

[22] The apparatus according to claim 15, wherein said processor is further configured to select a backup port from among the plurality of physical data ports, different from said single physical tunnel port, and wherein said mapper is further configured, responsively to a service interruption of said single physical tunnel port, to direct the first MPLS/LAG switch to switch said data packet to said backup port, and send said data packet to the second MPLS/LAG switch via said backup port.

Claims 11 and 22 recite using a backup port to communicate data packets if there is a service interruption of the physical tunnel port. EX1001, Cols. 10:20-26, 11:24-32. These claim elements are taught and rendered obvious by Raz. EX1004, ¶¶136-140, ¶¶200-204.

Raz discloses the use of "rerouting" to change "the route of a traffic path" if there is a "fault on the working path." EX1006, Col. 5:20-28; *see id.*, Cols. 2:38-62, 10:12-56. A POSA would have understood these disclosures in Raz to disclose the elements of Claims 11 and 22. EX1004, ¶¶136-140, ¶¶200-204. First, a POSA would have understood from the disclosure of "rerouting" in Raz that one way to address faults (which correspond to the claimed service interruptions) is to select a backup subport from the plurality of available physical data subports that can be used to transmit the high-speed packet stream if the previously selected physical data subport suffers a fault. *Id.*, ¶¶136-137, ¶¶200-201; EX1006, Cols. 5:20-59, 10:12-56. A POSA would have known that the backup subport is different from the primary physical tunnel subport because the purpose of rerouting is to have the ability to send packets along an alternate path if the primary physical tunnel subport suffers a fault.

EX1004, ¶137, ¶201; EX1006, Cols. 5:20-28, 5:51-35, 10:12-56. Further, a POSA would have known from Raz that, if a fault (i.e., service interruption) occurs with the primary physical data subport, the packets in the high-speed packet stream would have been rerouted through a "switchover" process that uses the backup port in order to send the packets along an "alternate path" to the second MPLS/LAG switch. EX1004, ¶138, ¶202; EX1006, Col. 5:20-62. With respect to Claim 22, a POSA would have known that the switchover process is performed by a mapper. EX1004, ¶202.

Moreover, a POSA would have found it obvious that the discussion of rerouting between different subports to avoid a fault within the LSR in Raz would have been applicable to rerouting between different ports on MPLS/LAG switches in an MPLS network. EX1004, ¶139, ¶203.

L. Claim 12

[12] The method according to claim 11, further comprising the step of responsive to a restoral of said service interruption of said single physical tunnel port, reverting switching of said data packet from said backup port and sending said data packet to said second MPLS/LAG switch via said single physical tunnel port.

Claim 12 recites switching back from the backup port to the physical tunnel port if the service interruption is removed. EX1001, Col. 10:27-32. These claim elements are taught and rendered obvious by Raz. EX1004, ¶¶141-143. Raz discloses a "revertive mode" that operates as "a recovery mode in which traffic is

automatically switched back from the recovery path to the original working path upon the restoration of the working path to a fault-free condition." EX1006, Col. 5:64-67. Further, Raz explains that "[a] switchback is the process of returning the traffic from one or more recovery paths back to the working path(s)." *Id.*, Col. 5:62-63. A POSA would have understood from these disclosures in Raz that, upon the elimination of a fault condition (i.e., the restoral of a service interruption), the system in Raz would revert to using the LSP through the primary physical data subport (or port) to forward data packets to the second MPLS/LAG switch, as discussed above for Element [1.5]. EX1004, ¶¶141-142.

M. Claims 13 and 23

[13/23] The method (apparatus) according to claim 1 (15), wherein said first MPLS/LAG switch comprises a Label Switched Router (LSR).

Claims 13 and 23 recite that the MPLS/LAG switch is a LSR. EX1001, Cols. 10:33-35, 11:33-35. These claim elements are taught and rendered obvious by Raz. EX1004, ¶¶144-145, ¶205.

Raz repeatedly discloses that the device used to switch high-speed packet streams in a LAG in an MPLS environment is a LSR, as shown below in Figure 1 of Raz. *See* EX1006, Cols. 6:9-20, 6:63-8:13, 10:33-48, Figure 3. Further, as discussed above for Element [1.1], a POSA would have understood that the LSR would have functioned as a MPLS/LAG switch. EX1004, ¶144, ¶205; EX1009 at 7.

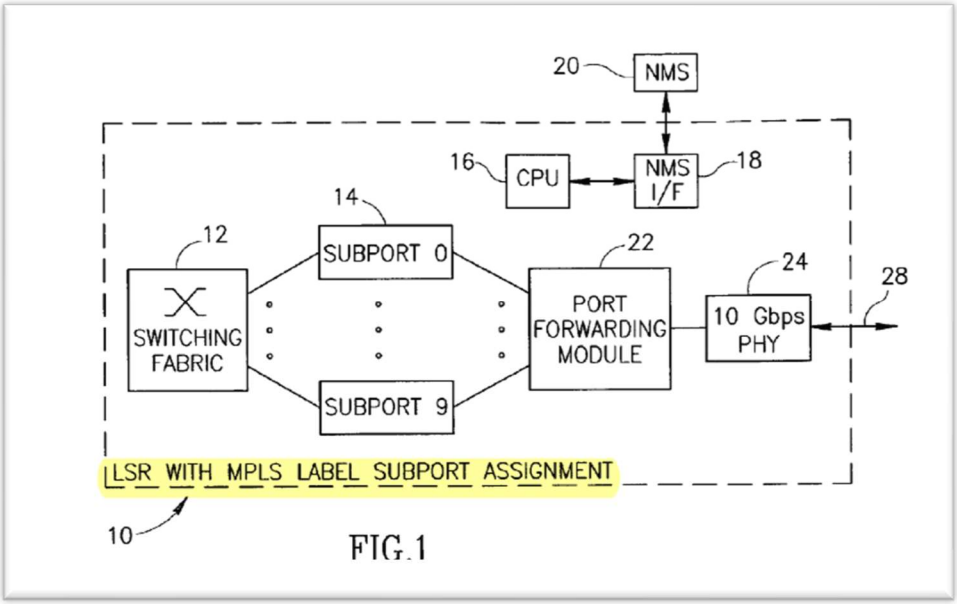

Figure 1 of Raz (Annotated)

N. Claim 15

Claim 15 is an apparatus claim that contains numerous elements that are similar to method Claim 1. *See* EX1001, Cols. 9:23-47, 10:41-64. Thus, the analysis for Claim 1 is incorporated in the below discussion of Claim 15. EX1004, ¶¶146-182.

[15.0] An apparatus for assigning and utilizing an Ethernet physical data port in an Ethernet Link Aggregation Group (LAG) located downstream from a preceding node in a MultiProtocol Label Switching (MPLS) network tunnel employing Resource Reservation Protocol Traffic Engineering (RSVP-TE) tunnel provisioning, the LAG having a first MPLS/LAG switch and a second MPLS/LAG switch, the apparatus comprising:

Element [15.0] is a preamble stating that the claim covers an apparatus for utilizing an Ethernet physical data port in an Ethernet LAG in a MPLS network

tunnel employing RSVP-TE tunnel provisioning. EX1001, Col. 10:41-48. To the extent this preamble is limiting, it is taught by Raz. EX1004, ¶¶146-151.

Raz discloses the use of an apparatus for implementing its system for communicating packets within a high-speed packet stream. EX1004, ¶147. Specifically, Raz discloses that its system can be implemented using a processor, a FPGA, an ASIC, or a combination of those apparatuses. EX1006, Cols. 2:33-40, 7:54-8:13, 12:25-30, 12:57-31:1, 13:56-61. Further, as discussed above for Element [1.0], Raz explains that its apparatus can be used to communicate packets within an MPLS network. *Id.*, Abstract, Col. 1:40-55; EX1004, ¶148. Figure 1 of Raz (shown below) demonstrates that the system of Raz is implemented in an MPLS network:

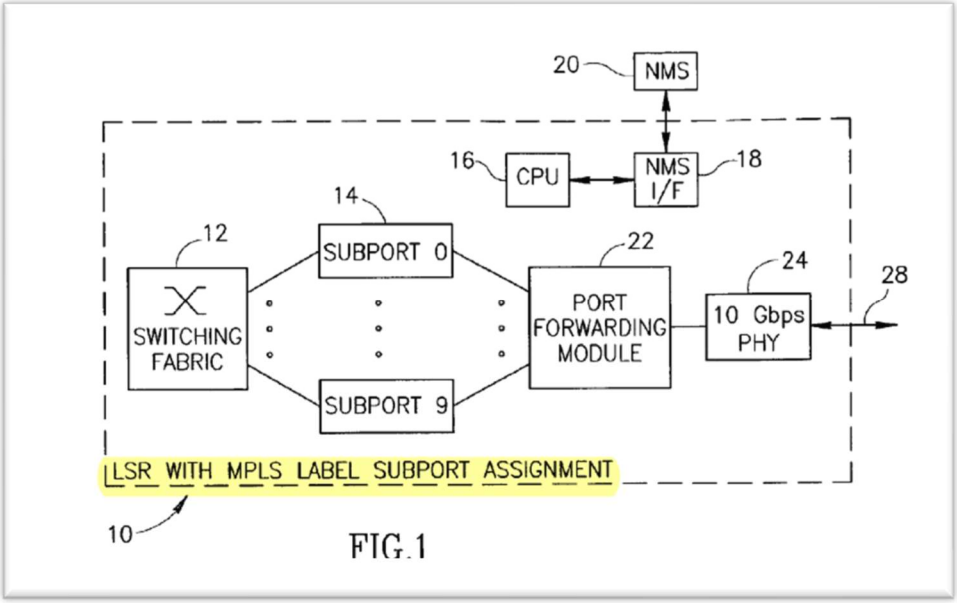

Figure 1 of Raz (Annotated)

Further, the specification and claims of Raz state that its system is implemented in an MPLS network tunnel. EX1006, Col. 7:17-29; *see id.*, Cols. 7:7-16, 9:9-48, 11:3-12, 14:30-32, 14:50-52, 16:63-65, 17:14-16; EX1004, ¶148. Raz also discloses that its MPLS tunnel employs Resource Reservation Protocol Traffic Engineering (RSVP-TE) tunnel provisioning. EX1006, Col. 6:46-50; *see id.*, Cols. 1:36-39, 5:10; EX1004, ¶148.

In addition, Raz teaches the use of link aggregation to transport high-speed network traffic within the LSRs in an MPLS network. EX1004, ¶149. Within the LSRs, individual packets from a high-speed data stream are assigned to one of a plurality of subports for transportation through the LSR and then re-aggregated into the high-speed packet stream before being forwarded to the next node in a network (such as the next LSR). EX1006, Cols. 2:41-67, 6:34-45. Figure 1 of Raz (shown below) provides an example of ten subports (Subport 0-Subport 9) used to implement link aggregation within an LSR in an MPLS environment:

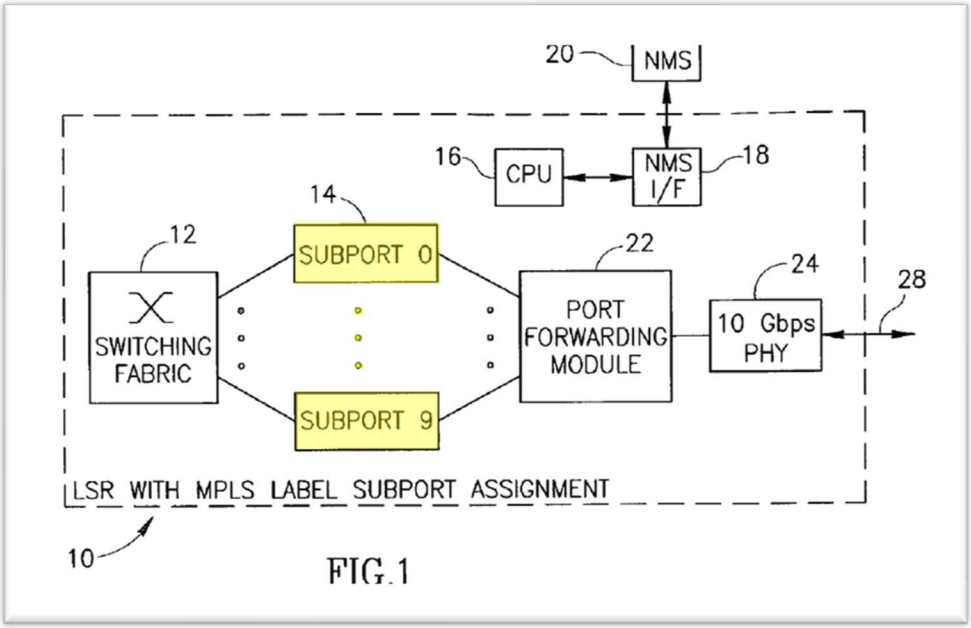

Figure 1 of Raz (Annotated)

EX1004, ¶149. The specification of Raz explains that the link aggregation is used to transport a high-speed packet stream through a plurality of subports of lesser speed within a LSR. EX1006, Cols. 7:7-16, 9:9-12, 14:19-22, 15:32-35, 16:41-53, 17:62-18:7, 18:39-42, 19:3-7; EX1004, ¶149. Further, Raz discloses that its invention could be implemented in Ethernet networks, and it identifies transmission speeds used by Ethernet networks (e.g., 1G and 10G). EX1006, Cols. 1:16-19, 2:28-31, 4:52, 13:16-19, 14:42-44, 15:56-58. Thus, a POSA would have understood that Raz discloses Ethernet subports in an Ethernet LAG. EX1004, ¶149.

As discussed above for Element [1.0], while Raz discusses the utilization of subports in a LAG within a LSR to communicate high-speed packet streams in an MPLS network, a POSA similarly would have known to use Ethernet physical data

ports of a router or switch in an Ethernet LAG to communicate high-speed packet streams in a MPLS network.[5] EX1004, ¶150. The concept of using aggregation to communicate individual packets of a high-speed packet stream through subports *within* a LSR also applies to communicating individual packets through Ethernet physical data ports *used to connect different* routers or switches in a MPLS network. *Id.* Packet streams are communicated in the same way within a LSR as they are communicated between routers and switches. *Id.* There would have been a desire to identify and assign a path that will have sufficient bandwidth to accommodate packets within a high-speed stream. *Id.* The teachings of Raz thus would have been directly applicable to communications between routers or switches in an Ethernet LAG in a MPLS network. *Id.*

[15.1] a processor, which is configured to:

Element [15.1] recites that the claimed apparatus includes a processor. EX1001, Col. 10:49. This element is taught by Raz, which discloses that its invention "is suited for implementation in hardware such as a network **processor** adapted to implement the mechanism of the present invention…." EX1006, Col.

[5] As discussed above for Element [1.1], a POSA would have considered the LSR in Raz to be a type of MPLS/LAG switch. *See* EX1004, ¶¶86, 90; EX1009 at 7; EX1006, Col. 7:7-16.

2:33-36 (emphasis added); *see id.*, Cols. 2:36-40, 3:39, 7:54-8:13, 12:25-30, 12:57-31:1, 13:56-61; EX1004, ¶¶152-154.

[15.2] assign a single physical tunnel port of a LAG to a network tunnel, wherein said single physical tunnel port meets a bandwidth requirement of the network tunnel, and wherein said single physical tunnel port has a port serial number;

Element [15.2] covers substantially the same subject matter as Element [1.1] of Claim 1. EX1001, Col. 10:50-54. As such, this element is taught by Raz for the same reasons as those discussed above for Element [1.1]. EX1004, ¶¶84-92, 155-162.

[15.3] dedicate a sub-set of bits in a data packet label to encode said port serial number of said single physical tunnel port of the LAG into the data packet label;

Element [15.3] covers substantially the same subject matter as Element [1.2] of Claim 1. EX1001, Col. 10:55-57. As such, this element is taught and rendered obvious by Raz for the same reasons as those discussed above for Element [1.2]. EX1004, ¶¶93-96, 163-166.

[15.4] publish said packet label upstream;

Element [15.4] covers substantially the same subject matter as Element [1.3] of Claim 1. EX1001, Col. 10:58. As such, this element is taught and rendered obvious by Raz for the same reasons as those discussed above for Element [1.3]. EX1004, ¶¶97-101, 167-169.

[15.5] and a mapper, which is configured to:

Element [15.5] recites that the claimed apparatus includes a mapper. EX1001, Col. 10:59. This element is obvious in view of Raz and the knowledge of a POSA. EX1004, ¶¶170-172.

As discussed above for Elements [15.0] and [15.2], Raz discloses that its apparatus can be implemented using a network processor, a FPGA, an ASIC or a combination of these. EX1006, Cols. 2:3-8, 2:33-40, 3:39, 6:27-29, 7:54-8:13, 12:25-30, 12:57-31, 13:56-61. As with Claim 8, a POSA would have understood from this disclosure that the apparatus of Raz would have included a mapper to perform the functions recited below in Elements [15.6]-[15.8]. EX1004, ¶171. Specifically, Claim 15 states that the purpose of the mapper is to receive a data packet, detect a data packet label within the data packet, and determine how to forward the data packet in accordance with the label. Raz teaches a forwarding module that performs these functions and thus corresponds to the mapper recited in Element [15.5]. EX1006, Col. 7:30-58; *see id.*, Col. 9:29-58, Figures 3-4; EX1004, ¶171.

[15.6] receive a data packet from an upstream node;

Element [15.6] covers substantially the same subject matter as Element [1.4] of Claim 1. EX1001, Col. 10:60. As such, this element is taught by Raz for the same reasons as those discussed above for Element [1.4]. EX1004, ¶¶102-105, 173-175.

[15.7] detect said data packet label in said data packet; and

Element [15.7] recites that the mapper detects the data packet label. EX1001, Col. 10:61. This element is taught and rendered obvious by Raz, which explains that, when a LSR receives a data packet from an upstream node, the LSR detects the data packet label indicating the physical tunnel subport over which the packet should be communicated. EX1006, Col. 7:39-45; *see id.*, Cols. 9:29-58, 14:23-26, Figures 3-4; EX1004, ¶¶176-178. For example, Claim 1 of Raz recites that its LSR detects the data packet label and "forward[s] inbound packets transmitted by said upstream node and received over said communications link by said downstream node to a subport **in accordance with the label associated with said inbound packet**." Exhibit 1006, Col. 14:23-26 (emphasis added). A POSA would have understood from this disclosure that the data packet label in the data packet is detected by a mapper in Raz in order to forward the packet to a subport identified by the label. EX1004, ¶177.

[15.8] if said data packet contains said data packet label, send said data packet to the second MPLS/LAG switch via said single physical tunnel port.

Element [15.8] recites that the mapper sends the data packet to a second MPLS/LAG switch via the physical tunnel port identified in the data packet label. EX1001, Col. 10:62-64. This element is taught by Raz. EX1004, ¶¶179-182.

As discussed above for Element [15.7], Raz discloses that, when a data packet is received from an upstream node, the LSR detects the data packet label. EX1004, ¶180. Further, as discussed above for Element [1.3], Raz explains that a packet

received at a first LSR is forwarded to a second LSR, wherein the packet has a data packet label indicating the physical tunnel subport over which the packet should be forwarded. EX1006, Col. 7:17-29; EX1004, ¶180. For example, LSR B in the example described in Column 7 corresponds to the claimed first MPLS/LAG switch. *Id.* A POSA would have understood that a data packet in LSR B could be sent to another LSR (which corresponds to the claimed second MPLS/LAG switch) via a physical tunnel subport (subport 3) that is indicated in the data packet label. EX1006, Col. 7:39-45; *see id.*, Cols. 7:17-29, 9:29-58, Figures 3-4; EX1004, ¶180. As Claim 1 of Raz states, the packet is forwarded "in accordance with the label associated with" the packet. Exhibit 1006, Col. 14:23-26.

As discussed above for Elements [15.0] and [15.1], a POSA would have been motivated to communicate packets from a first MPLS/LAG switch to a second MPLS/LAG switch in a MPLS network in the same way as packets communicated from one LSR to another in Raz. EX1006, Col. 11:3-12; *see id.*, Cols. 2:23-25, 7:7-16, 7:22-26, 11:13-12:9, Figure 5; EX1004, ¶181.

O. Claim 24

[24] The apparatus according to claim 15, wherein said processor comprises a network processor.

Claim 24 recites that the processor is a network processor. EX1001, Col. 11:36-37. This claim element is taught by Raz, which states in multiple places that

its invention could have been implemented on a network processor. EX1006, Cols. 1:65-2:8, 2:33-40, 6:24-33, 7:54-62, 11:24-29, 12:25-41, 12:51-53, 12:66-13:19, 13:56-61, 14:46-49, 15:59-62, 17:10-13; EX1004, ¶206.

P. Claim 26

Method Claim 26 is substantially similar to method Claim 1, except that Claim 26 additionally recites receiving a request message, as discussed below for Element [26.1]. *See* EX1001, Cols. 9:23-47, 12:4-34. Thus, the analysis for Claim 1 is incorporated in the discussion of Claim 26. EX1004, ¶¶207-239.

[26.0] A method for assigning and utilizing an Ethernet physical data port in an Ethernet Link Aggregation Group (LAG) in a Multi-Protocol Label Switching (MPLS) network, the method comprising the steps of:

Element [26.0] is a preamble that covers substantially the same subject matter as Element [1.0] of Claim 1. EX1001, Col. 12:4-7. To the extent this preamble is limiting, it is taught by Raz for the same reasons as those discussed above for Element [1.0]. EX1004, ¶¶79-83, 207-211.

[26.1] receiving from a preceding node located upstream from a first MPLS/LAG switch, at said first MPLS/LAG switch, a request message requesting configuration of a network tunnel, the message further requesting a data packet label associated with said network tunnel, said request message specifying a bandwidth requirement;

Element [26.1] relates to a request message sent to the first MPLS/LAG switch from the preceding node. EX1001, Col. 12:8-13. These elements are taught by Raz. EX1004, ¶¶212-215.

As discussed above for Claim 2, Raz discloses that "the assignment of subports to LSPs" is performed "in response to LSP setup requests." EX1006, Cols. 7:65-8:1; EX1004, ¶213. With respect to the LSP setup requests, Raz explains that a preceding node upstream from a LSR sends a request message requesting configuration of the network tunnel (i.e. the LSP) and requesting that the data packet label associated with the network tunnel be sent to the preceding node so that the preceding node knows the subport to which the data packet should be routed through the network tunnel.[6] EX1006, Col. 8:4-10; *see id.*, Cols. 7:65-8:13. Further, Raz's focus on ensuring that the subports have sufficient bandwidth for communicating the packet in a high-speed packet stream demonstrates that it would have been obvious that the request message would specify a bandwidth requirement. *Id.*, Cols. 2:23-25, 7:7-26, 11:3-12:9, 14:33-41, 15:47-55, 16:65-17:6, Figure 5; EX1004, ¶¶213-214.

[26.2] assigning, at the first MPLS/LAG switch, a single physical tunnel port of a LAG to the network tunnel wherein the single physical tunnel port of the LAG, which meets the specified bandwidth requirement, wherein said single physical tunnel port of said LAG has a port serial number;

[6] As discussed above for Element [1.1], a POSA would have considered the LSR in Raz to be a type of MPLS/LAG switch. *See* EX1004, ¶¶86, 90; EX1009 at 7; EX1006, Col. 7:7-16.

Element [26.2] covers substantially the same subject matter as Element [1.1] of Claim 1. EX1001, Col. 12:14-19. As such, this element is taught and rendered obvious by Raz for the same reasons as those discussed above for Element [1.1]. EX1004, ¶¶84-92, 216-223.

[26.3] dedicating a sub-set of bits in a data packet label prepared by said first MPLS/LAG switch to encode said port serial number of said single physical tunnel port of the LAG into the data packet label;

Element [26.3] covers substantially the same subject matter as Element [1.2] of Claim 1. EX1001, Col. 12:20-23. As such, this element is taught and rendered obvious by Raz for the same reasons as those discussed above for Element [1.2]. EX1004, ¶¶93-96, 224-227.

[26.4] sending, by said first MPLS/LAG switch, said data packet label, in which said port serial number of said single physical tunnel port is encoded, to the preceding node;

Element [26.4] covers substantially the same subject matter as Element [1.3] of Claim 1. EX1001, Col. 12:24-26. As such, this element is taught and rendered obvious by Raz for the same reasons as those discussed above for Element [1.3]. EX1004, ¶¶97-101, 228-231.

[26.5] receiving from the preceding node, at said first MPLS/LAG switch, a data packet that includes said data packet label, in which said port serial number of said single physical tunnel port is encoded; and

Element [26.5] covers substantially the same subject matter as Element [1.4] of Claim 1. EX1001, Col. 12:27-30. As such, this element is taught and rendered

obvious by Raz for the same reasons as those discussed above for Element [1.4]. EX1004, ¶¶102-105, 232-235.

[26.6] sending said data packet from said first MPLS/LAG switch to a second MSPLS/LAG switch via said single physical tunnel port having the port serial number encoded in the data packet label.

Element [26.6] covers substantially the same subject matter as Element [1.5] of Claim 1. EX1001, Col. 12:31-34. As such, this element is taught and rendered obvious by Raz for the same reasons as those discussed above for Element [1.5]. EX1004, ¶¶106-109, 236-239.

X. GROUND 2: CLAIMS 1-26 ARE UNPATENTABLE AS OBVIOUS OVER THE COMBINATION OF RAZ, FERGUSON AND THE KNOWLEDGE OF A POSA.

The combination of Raz and Ferguson (neither of which were considered during prosecution of the '602 Patent), along with the knowledge of a POSA, renders Claims 1-26 obvious. With respect to Raz, Petitioner incorporates by reference the analysis of the obviousness of Claims 1-13, 15-24 and 26 set forth above in Ground 1. *See* above Section IX; EX1004, ¶¶78-239.

Claims 1, 15 and 26 – For independent Claims 1, 15 and 26, Ferguson builds on the previous analysis of Raz by disclosing a system for communicating packets between switches and routers in an MPLS network that addresses the same concerns about allocating the bandwidth of physical data ports in a LAG to deal with the demands of communicating high-speed packet streams as are addressed

by Raz. EX1004, ¶¶240-280, ¶¶295-336, ¶¶348-390. As discussed below, Ferguson teaches a POSA that the method of assigning a subport with appropriate bandwidth *within* the LSR that is disclosed in Raz could also be implemented *between* MPLS/LAG switches in an MPLS network. *See, e.g., id.*, ¶245. That is, to the extent that it was not already obvious from Raz, a POSA reviewing Ferguson would have understood that it would be desirable to implement the techniques in Raz for assigning a physical tunnel subport within an LSR to assign a physical tunnel port to communicate packets along "physical interconnects" between "two switches" in an MPLS network. EX1007, Col. 1:22-27, 1:57-66; EX1004, ¶245. The teachings of Ferguson are compatible with and readily implementable in the Raz system. CITE. For these reasons and the reasons discussed below, a POSA would have been motivated to combine the teachings of Raz and Ferguson. *See, e.g.*, EX1004, ¶¶246-250.

Ferguson discloses the utilization of an Ethernet physical data port in a LAG in an MPLS network for the purpose of communicating high-speed packet streams. EX1007, Cols. 1:21-26, 1:43-53, 3:36-4:19, 6:10-31, Figures 2A-2C; EX1004, ¶244. As shown below in Figures 2A-2C of Ferguson, MPLS packets are communicated along a physical interconnect that is part of an "aggregate interface" (i.e., a LAG) between ports on two routers:

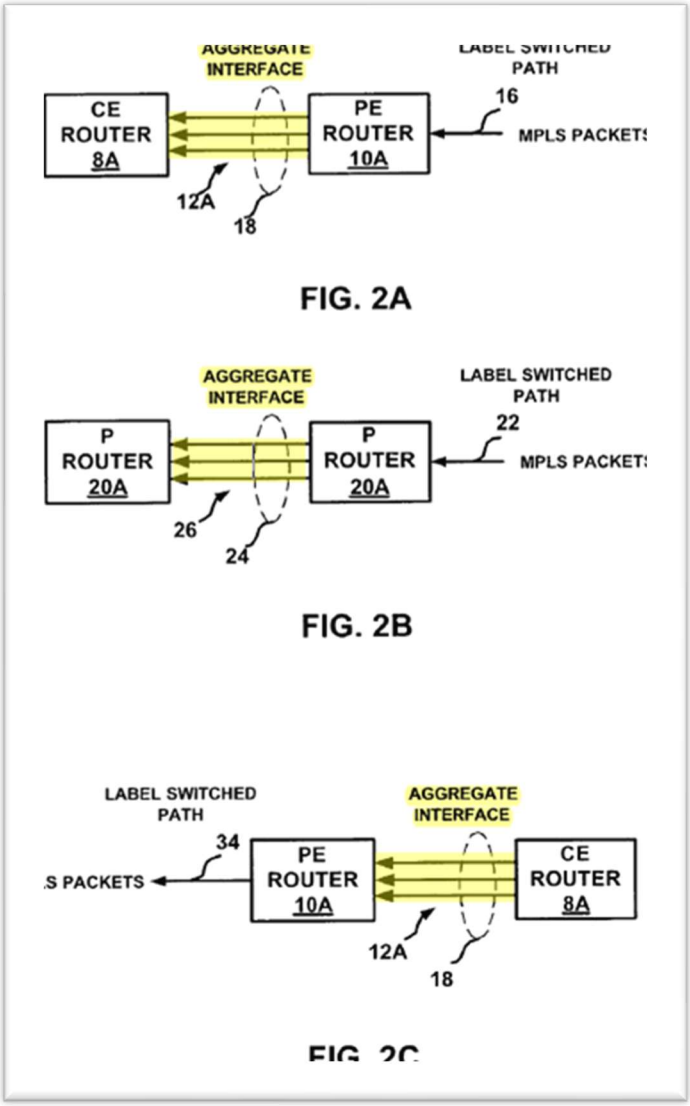

Figures 2A-2C of Ferguson (Annotated)

EX1004, ¶244. Further, Ferguson states that the physical interconnects may be Ethernet physical data ports (EX1007, Cols. 1:21-24, 1:43-53, 3:36-4:19, 5:4-24 (Table 1), 7:4-12) and that "the physical interconnects may couple other devices, e.g., two switches…." *Id.*, Cols. 1:24-26, 8:61-64; EX1004, ¶244.

Ferguson would have taught a POSA that the method of assigning a subport with appropriate bandwidth within the LSR of Raz could also be implemented between network devices (such as MPLS/LAG switches) in an MPLS network. EX1004, ¶245. Ferguson discloses that its techniques can be implemented to communicate packets along "physical interconnects" between "two switches" in an MPLS network. EX1007, Col. 1:22-27, 1:57-66. In addition, Ferguson discloses that the physical interconnects between network devices (such as switches or routers) can be used as part of a LAG. *Id.*, Cols. 1:28-53, 2:44-47; EX1004, ¶¶244, 246, 250.

Importantly, Ferguson states that the techniques used to communicate high-speed data streams *within* a router or switch in an MPLS network can also be applied to communicating high-speed data streams *between* two routers or *between* two switches in a MPLS network. EX1007, Cols. 5:61-6:6; EX1004, ¶245. Ferguson states that "[a]lthough [its] techniques have been described in reference to distribution of MPLS packets across parallel physical interconnects of an aggregated link, the techniques may be applied in a variety of environments." EX1007, Col. 5:63-67. "For example, the techniques may be readily applied to internal parallel data paths within a device." *Id.*, Cols. 5:67-6:2. "For example, the techniques may be used by a router [or switch] to distribute packets across internal data paths that begin at the same input interface of the router [or switch] and end at the same output

interface of the router [or switch], but traverse through different internal, high-speed switch fabrics." *Id.*, Col. 6:2-6.

These disclosures in Ferguson demonstrate that the techniques used to reserve the bandwidth needed to communicate packets within a network device can also be applied to reserve the bandwidth needed to communicate packets between network devices in an MPLS network. EX1004, ¶245. Indeed, packets are communicated the same way within a device as between devices. *Id.* Thus, a POSA would have understood that the techniques disclosed in Raz for forwarding packets using physical subports within a LSR in an MPLS network could also be applied when communicating packets from a physical port on one MPLS/LAG switch to a physical port on another MPLS/LAG switch. *Id.*

Motivation to Combine Raz and Ferguson – A POSA would have been motivated to apply the teachings of Ferguson to Raz because this increases the availability of bandwidth needed to efficiently communicate high-speed packet streams via a LAG in a MPLS network. EX1004, ¶246-250. Raz and Ferguson are analogous art references that focus on solving the same problem. *Id.*, ¶246. Both Raz and Ferguson relate to the use of an MPLS network to communicate data packets. EX1006, Cols. 1:65-2:8, 2:26-31, 6:24-33, Figures 1 and 3-4; EX1007, Cols. 1:57-2:3, 2:22-26, 3:36-67, 8:10-12, Figures 2A-8. Both Raz and Ferguson extensively discuss the use of a LAG in an MPLS network to communicate the data

packets. EX1006, Cols. 2:41-67, 6:34-45, 7:7-16, 14:19-22, Figure 1; EX1007, Cols. 1:21-26, 1:43-53, 3:36-4:19, 6:10-31, Figures 2A-2C. Ferguson discloses the utilization of an Ethernet physical data port in a LAG to communicate MPLS packets between routers or switches in an MPLS network, which is the same subject matter as Raz. EX1007, Cols. 1:21-26, 1:43-53, 3:36-4:19, 6:10-31, Figures 2A-2C; EX1006, Cols. 1:65-2:8, 2:41-67, 6:34-45, 7:7-16, 14:6-26, 14:50-52, Figure 1.

Moreover, both Raz and Ferguson are directed to solving the problem of ensuring enough bandwidth is available to communicate high-speed packet streams through an MPLS network. EX1006, Cols. 10:60-11:12, 14:33-41, 15:47-55, 17:1-9, Figure 5; EX1007, Cols. 1:28-42, 2:54-57, 4:55-60; EX1004, ¶¶247-249. Raz discusses allocating the bandwidth of subports within an LSR in order to handle high-speed packet streams transiting the LSR. EX1004, ¶247. Raz explains that its "invention also comprises a mechanism to improve the ability to handle wide connections . . that require a relatively large amount of CIR bandwidth." EX1006, Col. 10:60-63. Raz states that "a connection of 500 Mbps, 700 Mbps or even a connection of 1 Gbps may need to be supported." *Id.*, Col. 10:63-65. Raz also discusses "the problem of fragmentation," and it provides an example where "300 Mbps of CIR bandwidth [is] already allocated on each of the ten subports of a 10G

port." *Id.*, Col. 10:65-67. "In this case, a connection of 800 Mbps cannot be allocated on it even though the 10G port has 5600 M of free bandwidth." *Id.*, Col. 11:1-2.

Raz explains that its "invention provides a scheme for allocating LSP bandwidth to subports that helps in solving the problem described above in a way that provides a tradeoff between leaving subports empty for wide LSPs and spreading traffic between subports for best utilizing the bandwidth of the link (e.g., for EIR traffic)." EX1006, Col. 11:3-8; EX1004, ¶248. "The central idea is to leave one or more subports empty (i.e. no bandwidth used) in the event a wide connection is to be allocated." EX1006, Col. 11:8-10. "The allocated bandwidth, however, is still distributed among the subports in such a way that EIR traffic is supported." *Id.*, Col. 11:10-12.

Ferguson similarly addresses the need to have bandwidth available for high-speed packet streams when implementing LAG to communicate data packets in an MPLS network. EX1007, Cols. 1:28-42, 2:54-57, 4:55-60; EX1004, ¶¶249-250. Ferguson explains that load balancing of MPLS packets in conventional systems "may not be able to achieve substantial distribution of the traffic among the paths, which may result in congestion on one data path and unused bandwidth on another." EX1007, Col. 4:55-59; EX1004, ¶249. "This may decrease the efficiency of the network and increase packet latency." EX1007, Col. 4:59-60. Ferguson, like Raz, focuses on improving the use of bandwidth when using a LAG in an MPLS network.

Id., Cols. 1:28-42, 2:54-57, 4:55-60; EX1004, ¶249. Further, like Raz, Ferguson explains that it can "use one or more fields directly from one or more of [the] MPLS labels" to select the path for communicating data packets. EX1007, Col. 8:10-12. A POSA thus would consider Raz and Ferguson to be analogous art references that address similar problems. EX1004, ¶249.

A POSA would have understood from the disclosures in Ferguson that techniques for utilizing an Ethernet physical data port in a LAG to communicate data packets between routers or switches in an MPLS network are also applicable to the use of subports transmitting the data packets within the routers or switches, and vice versa. EX1004, ¶250; EX1007, Cols. 5:61-6:6. Armed with this understanding, a POSA would have known that the techniques disclosed in Raz for using subports to transmit data packets within a router or switch would also have been applicable to an Ethernet physical data port in a LAG that communicates data packets between routers or switches in an MPLS network. EX1004, ¶250. As such, the efficient use of bandwidth realized inside the LSR would also have been realized using the same techniques for communications between LSRs. *Id.*

Claims 2-13 and 16-24 – Dependent Claims 1-13 and 16-24 are rendered obvious by Raz for the reasons discussed above in Ground 1, which are incorporated here by reference in their entirety. EX1004, ¶¶281-292, 337-345.

Claims 14 and 25 – Claims 14 and 25 recite that a plurality of physical data ports in the first MPLS/LAG switch are viewed as a single logical port. EX1001, Cols. 10:37-40, 12:1-3. The elements of Claims 14 and 25 are taught by Ferguson. EX1004, ¶¶293-294, 346-347. Ferguson explains that "[t]he term 'link aggregation' refers to a technique by which the multiple physical interconnects are logically associated and treated as a single, aggregated link." EX1007, Col. 1:28-30; *see id.*, Cols. 1:60-63, 2:44-47, 3:42-44, 4:1-7. A POSA would have understood from these disclosures in Ferguson that the plurality of physical data ports of a MPLS/LAG switch that are used to implement a LAG would be designated and treated as a single logical port. EX1004, ¶293, 346.

XI. OBJECTIVE INDICIA OF NONOBVIOUSNESS

At this stage of these proceedings, Petitioner has no burden to identify and rebut objective indicia of nonobviousness. EX1004, ¶391. Patent Owner must first present a *prima facie* case for such consideration, which Petitioner should then have the chance to rebut on reply. *Sega of Am., Inc. v. Uniloc USA, Inc.*, IPR2014-01453, Paper 11, at *20 (PTAB Mar. 10, 2015); *Petroleum Geo-Services Inc. v. WesternGeco LLC*, IPR2014-01478, Paper 18, at *36 (PTAB Mar. 17, 2015).

XII. DISCRETIONARY DENIAL UNDER § 325(D) OR § 314 IS NOT WARRANTED

The PTO has not previously considered Raz or Ferguson in connection with the claims of the '602 Patent. Further, the combination is not redundant to any combination of references considered during prosecution. Additionally, the instant Petition provides the analysis of Dr. Bhattacharjee, an expert in the field of computer science and network communications. EX1004, ¶¶1-11. Dr. Bhattacharjee's analysis of the prior art has not been presented to the PTO. In view of the new information presented in this Petition, the Board has ample discretion to institute an IPR on the grounds presented. Discretionary denial under 35 U.S.C. §325(d) is not warranted here.

Likewise, denial under 35 U.S.C. §314(a) is not warranted, as the application of the factors in *General Plastic Industrial Co., Ltd. v. Canon Kabushiki Kaisha* demonstrates that the filing of the instant Petition is not abusive, that none of the Patent Owner, the PTO, or the Board has addressed the merits of the grounds in this Petition, and instituting the present proceeding is an efficient use of the Board's resources. *See* IPR2016-01357, Paper 19 (PTAB Sept. 6, 2017) (precedential). Petitioner has not challenged the '602 Patent in a prior petition.

Moreover, the Petition should not be denied under the discretionary factors set out in *Apple Inc. v. Fintiv, Inc.,* IPR2020-00019, Paper 11, at 6 (PTAB March 20, 2020). Petitioner addresses each of those factors below:

1. Whether the court granted a stay or evidence exists that one may be granted if a proceeding is instituted – If an IPR is instituted, a stay of the "Related Litigation" between Patent Owner and Petitioner (identified below in Section XIII.B) would be appropriate. However, given that a motion to stay has not yet been filed, the Board should not infer or attempt to predict the outcome if such a motion is later filed. *Sand Revolution II LLC v. Continental Intermodal Group-Trucking LLC*, IPR2019-01393, Paper 24 at 7 (PTAB June 16, 2020); *Dish Network LLC v. Broadband iTV, Inc.*, IPR2020-01359, Paper 15 at 11 (PTAB Feb. 12, 2021). Thus, this factor is neutral on discretionary denial.

2. Proximity of the court's trial date to the Board's projected statutory deadline for a final written decision – This factor weighs against discretionary denial because the Related Litigation between Patent Owner and Petitioner is still in its infancy. *Fintiv*, Paper 11 at 11–12. Fact discovery has not begun in the Related Litigation, and it will not begin until the day after the *Markman* hearing, which currently is scheduled for February 15, 2023. EX1011 at 2; EX1012. Further, a trial date has not yet been set in the litigation, as the Scheduling Order states only that trial would take place "52 weeks after Markman hearing (or as soon as practicable)."

EX1011 at 4. And this statement about trial may become moot as Petitioner currently has a pending motion to transfer this case to the Northern District of California (EX1013); if that motion is granted, a new trial schedule likely would be set in the transferee court.

Even if the Related Litigation is not transferred, the average time-to-trial for the district court hearing that litigation (as of June 30, 2022) was 28.3 months after a Complaint is filed, which would mean that trial in that litigation may start in August 2024. EX1014 (showing W.D. Texas statistics for median time from filing to trial (civil only)); EX1017 at 8-9 (noting proper reliance on average time-to-trial statistics). By contrast, the Final Written Decision in this proceeding would issue in July 2024 pursuant to 35 U.S.C. § 316(a)(11). Further, Petitioner notes that "a court's general ability to set a fast-paced schedule is not particularly relevant… where, like here, the forum itself has not historically resolved cases so quickly." *In re Apple Inc.*, 979 F.3d 1332, 1344 (Fed. Cir. 2020); *see also Sand Revolution II*, IPR2019-01393, Paper 24 at 8-9.

Finally, it is worth noting that no trial date has been set in the separate litigation between Patent Owner and Arista Networks, Inc. ("Arista") identified below in Section XIII.B, and the '602 Patent is also involved in that litigation. See EX1015 at 1, 1016. The outcome of this Petition would also narrow the issues in the litigation involving Patent Owner and Arista.

3. Investment in the parallel proceeding by the court and the parties – The Related Litigation is in its early stage, and the Court has not issued any substantive ruling relating to the '602 Patent. As discussed above, the Related Litigation may be transferred (EX1013), and, if not, fact discovery in that litigation does not begin until after the February 15, 2023 Markman hearing. EX1011 at 2; *see PEAG LLC v. Varta Microbattery GMBH*, IPR2020-01214, Paper 8 at 17 (Jan. 6, 2021) (finding that since no claim construction hearing had yet been held and discovery was not completed, the little investment in the parallel proceeding weighed against discretionary denial). The early stage of and minimal investment in the Related Litigation weighs against discretionary denial.

4. Overlap between issues raised in the Petition and in the parallel proceedings – There is no overlap of prior art issues at this time. Preliminary invalidity contentions were served on September 28, 2022. EX1011 at 1. Instituting a proceeding will allow the Board to address the art, and a Final Written Decision would narrow the issues in the Related Litigation due to the estoppel provisions of 35 U.S.C. § 315(e)(2). However, to reduce overlap further, if the Board institutes trial, Petitioners will cease asserting in the Related Litigations the prior art obviousness combinations on which trial is instituted for the claims on which trial is instituted, while trial is instituted. *See Sand Revolution II*, IPR2019-01393, Paper 24 at 11-12 (PTAB June 16, 2020) (holding a similar stipulation weighs against

discretionary denial); *Apple Inc. v. Maxell, Ltd.*, IPR2020-00204, Paper 11 at 15-17 (PTAB June 19, 2020) (same). This factor weighs against discretionary denial.

5. Whether the Petitioners and the defendant in the parallel proceeding are the same party – Petitioner is a defendant in the Related Litigation, but that is true of most petitioners in IPR proceedings. Accordingly, this factor is neutral and should not be a basis for denying institution.

6. Other circumstances that impact the Board's exercise of discretion, including the merits – As discussed in detail above, the analysis in Grounds 1-2 provides a compelling unpatentability challenge to Claims 1-26. The merits of Petitioners' arguments are strong, and this factor weighs against discretionary denial. *See* EX1017 at 3-5; *Sand Revolution II*, IPR2019-01393, Paper 24 at 13.

XIII. MANDATORY NOTICES UNDER 37 C.F.R. § 42.8

A. Real Party-in-Interest

Pursuant to 37 C.F.R. § 42.8(b)(1), Petitioner certifies that the real party-in-interest is Cisco Systems, Inc.

B. Related Matters

The '602 Patent is asserted in *Corrigent Corp. v. Cisco Systems, Inc.*, Case No. 6:22-cv-396 (W.D. Tex.) and *Corrigent Corp. v. Arista Networks, Inc.*, Case No. 1:22-cv-497 (D. Del.).

C. Lead and Back-up Counsel and Service Information

Lead Counsel	
Jeffrey D. Blake MERCHANT & GOULD P.C. 191 Peachtree Street NE Suite 3800 Atlanta, GA 30303	Phone: 404-954-5040 Fax: 612-332-9081 jblake@merchantgould.com USPTO Reg. No. 58,884
Back-up Counsel	
Daniel W. McDonald MERCHANT & GOULD P.C. 150 South Fifth Street Suite 200 Minneapolis, MN 55402	Phone: 612-336-4637 Fax: 612-332-9081 dmcdonald@merchantgould.com USPTO Reg. No. 32,044

Please address all correspondence to lead and back-up counsel at CorrigentIPR@merchantgould.com. Petitioner consents to electronic service.

XIV. CONCLUSION

For the reasons above, Petitioners ask that the Board order an *inter partes* review trial for Claims 1-26, and that the Director cancel these claims as unpatentable.

Respectfully submitted,

Date: January 10, 2023

/Jeffrey D. Blake/
Jeffrey D. Blake
Registration No. 58,884

CERTIFICATE OF WORD COUNT

Pursuant to 37 C.F.R. § 42.24, the undersigned attorney for the Petitioners, Cisco Systems, Inc., declares that the argument section of this Petition has 13,994 words, according to the word count tool in Microsoft Word™.

/Jeffrey D. Blake/
Jeffrey D. Blake
Registration No. 58,884

APPENDIX A – CLAIM LISTING

U.S. Patent No. 10,292,602

Claim or Element #	Claim Language
Claim 1	
[1.0]	A method for assigning and utilizing an Ethernet physical data port in an Ethernet Link Aggregation Group (LAG) in a Multi-Protocol Label Switching (MPLS) network, the method comprising the steps of:
[1.1]	assigning, by a first MPLS/LAG switch, a single physical tunnel port of a LAG to a network tunnel, wherein the single physical tunnel port of the LAG meets a bandwidth requirement of the network tunnel, and wherein said single physical tunnel port of the LAG has a port serial number;
[1.2]	dedicating a sub-set of bits in a data packet label prepared by the first MPLS/LAG switch to encode said port serial number of said single physical tunnel port of the LAG into the data packet label;
[1.3]	sending, by said first MPLS/LAG switch, the data packet label, in which said port serial number of said single physical tunnel port is encoded, to a preceding node;
[1.4]	receiving from the preceding node, by said first MPLS/LAG switch, a data packet comprising said data packet label, in which said port serial number of said single physical tunnel port is encoded; and
[1.5]	sending said data packet from said first MPLS/LAG switch to a second MSPLS/LAG switch via said single physical tunnel port having the port serial number encoded in the data packet label.
Claim 2	
	The method of claim 1, further comprising the step of receiving from a preceding node located upstream from said first MPLS/LAG switch, by said first MPLS/LAG switch, a request message requesting configuration of said network

Claim or Element #	Claim Language
	tunnel, the message further requesting said data packet label associated with said network tunnel.
Claim 3	
	The method of claim 2, wherein said request message comprises an RSVP-TE PATH message augmented with a LABEL_REQUEST object.
Claim 4	
	The method according to claim 3, wherein said request comprises an indication of a service property, and wherein said selecting comprises identifying a physical port in compliance with said service property.
Claim 5	
	The method according to claim 4, wherein said service property comprises at least one of: a guaranteed bandwidth; a peak bandwidth; and a class of service.
Claim 6	
	The method according to claim 1, wherein said selecting comprises selecting a single physical tunnel port having a maximum available bandwidth of said plurality of physical data ports.
Claim 7	
	The method according to claim 1, wherein said selecting comprises selecting a port having a minimum available bandwidth of said plurality of physical data ports which is not less than said bandwidth requirement of the network tunnel.
Claim 8	
	The method according to claim 1, wherein said switching said data packet is according to a mapping function.
Claim 9	
	The method according to claim 1, wherein said preparing comprises inserting into said data packet label a set of bits that identify said single physical tunnel port; and wherein said switching said data packet comprises extracting said set of bits to determine an identity of said single physical tunnel port.
Claim 10	

Claim or Element #	Claim Language
	The method according to claim 1, wherein said preparing comprises storing said data packet label along with an identifier of said single physical tunnel port in a memory, and wherein said switching said data packet comprises retrieving said identifier from said memory responsively to said data packet label
Claim 11	
	The method according to claim 1, further comprising the steps of: selecting a backup port from among the plurality of physical data ports, different from said single physical tunnel port; and responsively to a service interruption of said single physical tunnel port, switching said data packet to said backup port and sending said data packet to said second MPLS/LAG switch via said backup port.
Claim 12	
	The method according to claim 11, further comprising the step of responsive to a restoral of said service interruption of said single physical tunnel port, reverting switching of said data packet from said backup port and sending said data packet to said second MPLS/LAG switch via said single physical tunnel port.
Claim 13	
	The method according to claim 1, wherein said first MPLS/LAG switch comprises a Label Switched Router (LSR).
Claim 14	
	The method of claim 1, further comprising the step of designating by said first MPLS/LAG switch, the plurality of physical data ports in said first MPLS/LAG switch as a single logical port.
Claim 15	
[15.0]	An apparatus for assigning and utilizing an Ethernet physical data port in an Ethernet Link Aggregation Group (LAG) located downstream from a preceding node in a Multi-Protocol Label Switching (MPLS) network tunnel employing Resource Reservation Protocol Traffic Engineering (RSVP-TE) tunnel

Claim or Element #	Claim Language
	provisioning, the LAG having a first MPLS/LAG switch and a second MPLS/LAG switch, the apparatus comprising:
[15.1]	a processor, which is configured to:
[15.2]	assign a single physical tunnel port of a LAG to a network tunnel, wherein said single physical tunnel port meets a bandwidth requirement of the network tunnel, and wherein said single physical tunnel port has a port serial number;
[15.3]	dedicate a sub-set of bits in a data packet label to encode said port serial number of said single physical tunnel port of the LAG into the data packet label;
[15.4]	publish said packet label upstream; and
[15.5]	a mapper, which is configured to:
[15.6]	receive a data packet from an upstream node;
[15.7]	detect said data packet label in said data packet; and
[15.8]	if said data packet contains said data packet label, send said data packet to the second MPLS/LAG switch via said single physical tunnel port.
Claim 16	
	The apparatus according to claim 15, wherein the processor is configured to make said selection in compliance with a service property.
Claim 17	
	The apparatus according to claim 16, wherein said service property comprises at least one of the group consisting of a guaranteed bandwidth, a peak bandwidth, and a class of service.
Claim 18	
	The apparatus according to claim 17, wherein said processor is configured to make said selection of a port having a maximum available bandwidth of the plurality of ports.
Claim 19	
	The apparatus according to claim 17, wherein said processor is configured to make said selection of a port having a minimum available bandwidth of the plurality of ports which is not less than said bandwidth requirement of the network tunnel.
Claim 20	

Claim or Element #	Claim Language
	The apparatus according to claim 15, wherein said processor is configured to insert into said data packet label a set of bits which identify said single physical tunnel port; and wherein said mapper is configured to extract said set of bits to determine an identity of said single physical tunnel port.
Claim 21	
	The apparatus according to claim 15, further comprising a memory, and wherein said processor is configured to store said data packet label along with an identifier of said single physical tunnel port in said memory, and wherein said mapper is configured to retrieve said identifier from said memory responsively to said data packet label.
Claim 22	
	The apparatus according to claim 15, wherein said processor is further configured to select a backup port from among the plurality of physical data ports, different from said single physical tunnel port, and wherein said mapper is further configured, responsively to a service interruption of said single physical tunnel port, to direct the first MPLS/LAG switch to switch said data packet to said backup port, and send said data packet to the second MPLS/LAG switch via said backup port.
Claim 23	
	The apparatus according to claim 15, wherein said first MPLS/LAG switch comprises a Label Switched Router (LSR).
Claim 24	
	The apparatus according to claim 15, wherein said processor comprises a network processor.
Claim 25	
	The apparatus according to claim 15, wherein said plurality of physical data ports are selected from a single logical port.
Claim 26	
[26.0]	A method for assigning and utilizing an Ethernet physical data port in an Ethernet Link Aggregation Group (LAG) in a Multi-Protocol Label Switching (MPLS) network, the method comprising the steps of:

Claim or Element #	Claim Language
[26.1]	receiving from a preceding node located upstream from a first MPLS/LAG switch, at said first MPLS/LAG switch, a request message requesting configuration of a network tunnel, the message further requesting a data packet label associated with said network tunnel, said request message specifying a bandwidth requirement;
[26.2]	assigning, at the first MPLS/LAG switch, a single physical tunnel port of a LAG to the network tunnel wherein the single physical tunnel port of the LAG, which meets the specified bandwidth requirement, wherein said single physical tunnel port of said LAG has a port serial number;
[26.3]	dedicating a sub-set of bits in a data packet label prepared by said first MPLS/LAG switch to encode said port serial number of said single physical tunnel port of the LAG into the data packet label;
[26.4]	sending, by said first MPLS/LAG switch, said data packet label, in which said port serial number of said single physical tunnel port is encoded, to the preceding node;
[26.5]	receiving from the preceding node, at said first MPLS/LAG switch, a data packet that includes said data packet label, in which said port serial number of said single physical tunnel port is encoded; and
[26.6]	sending said data packet from said first MPLS/LAG switch to a second MSPLS/LAG switch via said single physical tunnel port having the port serial number encoded in the data packet label.

IN THE UNITED STATES PATENT AND TRADEMARK OFFICE

Cisco Systems, Inc. Apple Inc., Hewlett Packard Enterprise Co., Aruba Networks, LLC Petitioners	§ § § § §	Petition for Inter Partes Review U.S. Patent No. 10,292,602

CERTIFICATE OF SERVICE

The undersigned certifies, in accordance with 37 C.F.R. §§ 42.105 and 42.6, that service was made on the Patent Owner as detailed below.

Date of service	January 10, 2023
Manner of service	PRIORITY MAIL EXPRESS
Documents served	Petition for *Inter Partes* Review, including Exhibit List; Exhibits 1001 through 1019; Power of Attorney
Persons served	May Patents Ltd. (attorney/agent of record) c/o Dorit Shem-Tov P.O. Box 7230 Ramat-Gan, - 5217102 Israel Corrigent Corporation (assignee of record) 291 Main Street c/o New England Intellectual Property West Newbury, MA 01985

/Jeffrey D. Blake/
Jeffrey D. Blake
Registration No. 58,884