IEEE Std 802.3ad-2000
(Amendment to IEEE Std 802.3, 1998 Edition)

Information technology—
Telecommunications and information exchange between systems—
Local and metropolitan area networks—Specific requirements—

Amendment to Carrier Sense Multiple Access with Collision Detection (CSMA/CD) Access Method and Physical Layer Specifications—

Aggregation of Multiple Link Segments

Sponsor
LAN MAN Standards Committee
of the
IEEE Computer Society

Approved 30 March 2000
IEEE-SA Standards Board

Abstract: An optional Link Aggregation sublayer for use with CSMA/CD MACs is defined. Link Aggregation allows one or more links to be aggregated together to form a Link Aggregation Group, such that a MAC Client can treat the Link Aggregation Group as if it were a single link. To this end, it specifies the establishment of DTE to DTE logical links, consisting of N parallel instances of full duplex point-to-point links operating at the same data rate.
Keywords: Aggregated Link, Aggregator, Link Aggregation Group, Physical Layer

The Institute of Electrical and Electronics Engineers, Inc.
3 Park Avenue, New York, NY 10016-5997, USA

Copyright © 2000 by the Institute of Electrical and Electronics Engineers, Inc.
All rights reserved. Published 28 June 2000. Printed in the United States of America.

Print: ISBN 0-7381-2472-9 SH94845
PDF: ISBN 0-7381-2473-7 SS94845

No part of this publication may be reproduced in any form, in an electronic retrieval system or otherwise, without the prior written permission of the publisher.

Authorized licensed use limited to: N.C. State University Libraries - Acquisitions & Discovery S. Downloaded on November 14,2023 at 14:15:01 UTC from IEEE Xplore. Restrictions apply.

Cisco v. Corrigent - IPR2023-00447
Patent Owner Corrigent Exhibit 2012-0001

IEEE Standards documents are developed within the IEEE Societies and the Standards Coordinating Committees of the IEEE Standards Association (IEEE-SA) Standards Board. Members of the committees serve voluntarily and without compensation. They are not necessarily members of the Institute. The standards developed within IEEE represent a consensus of the broad expertise on the subject within the Institute as well as those activities outside of IEEE that have expressed an interest in participating in the development of the standard.

Use of an IEEE Standard is wholly voluntary. The existence of an IEEE Standard does not imply that there are no other ways to produce, test, measure, purchase, market, or provide other goods and services related to the scope of the IEEE Standard. Furthermore, the viewpoint expressed at the time a standard is approved and issued is subject to change brought about through developments in the state of the art and comments received from users of the standard. Every IEEE Standard is subjected to review at least every five years for revision or reaffirmation. When a document is more than five years old and has not been reaffirmed, it is reasonable to conclude that its contents, although still of some value, do not wholly reflect the present state of the art. Users are cautioned to check to determine that they have the latest edition of any IEEE Standard.

Comments for revision of IEEE Standards are welcome from any interested party, regardless of membership affiliation with IEEE. Suggestions for changes in documents should be in the form of a proposed change of text, together with appropriate supporting comments.

Interpretations: Occasionally questions may arise regarding the meaning of portions of standards as they relate to specific applications. When the need for interpretations is brought to the attention of IEEE, the Institute will initiate action to prepare appropriate responses. Since IEEE Standards represent a consensus of all concerned interests, it is important to ensure that any interpretation has also received the concurrence of a balance of interests. For this reason, IEEE and the members of its societies and Standards Coordinating Committees are not able to provide an instant response to interpretation requests except in those cases where the matter has previously received formal consideration.

Comments on standards and requests for interpretations should be addressed to:

Secretary, IEEE-SA Standards Board
445 Hoes Lane
P.O. Box 1331
Piscataway, NJ 08855-1331
USA

Note: Attention is called to the possibility that implementation of this standard may require use of subject matter covered by patent rights. By publication of this standard, no position is taken with respect to the existence or validity of any patent rights in connection therewith. The IEEE shall not be responsible for identifying patents for which a license may be required by an IEEE standard or for conducting inquiries into the legal validity or scope of those patents that are brought to its attention.

IEEE is the sole entity that may authorize the use of certification marks, trademarks, or other designations to indicate compliance with the materials set forth herein.

Authorization to photocopy portions of any individual standard for internal or personal use is granted by the Institute of Electrical and Electronics Engineers, Inc., provided that the appropriate fee is paid to Copyright Clearance Center. To arrange for payment of licensing fee, please contact Copyright Clearance Center, Customer Service, 222 Rosewood Drive, Danvers, MA 01923 USA; (978) 750-8400. Permission to photocopy portions of any individual standard for educational classroom use can also be obtained through the Copyright Clearance Center.

Authorized licensed use limited to: N.C. State University Libraries - Acquisitions & Discovery S. Downloaded on November 14,2023 at 14:15:01 UTC from IEEE Xplore. Restrictions apply.

Cisco v. Corrigent - IPR2023-00447
Patent Owner Corrigent Exhibit 2012-0002

Introduction to IEEE Std 802.3ad-2000

This standard is part of a family of standards for local and metropolitan area networks. The relationship between the standard and other members of the family is shown below. (The numbers in the figure refer to IEEE standard numbers.)

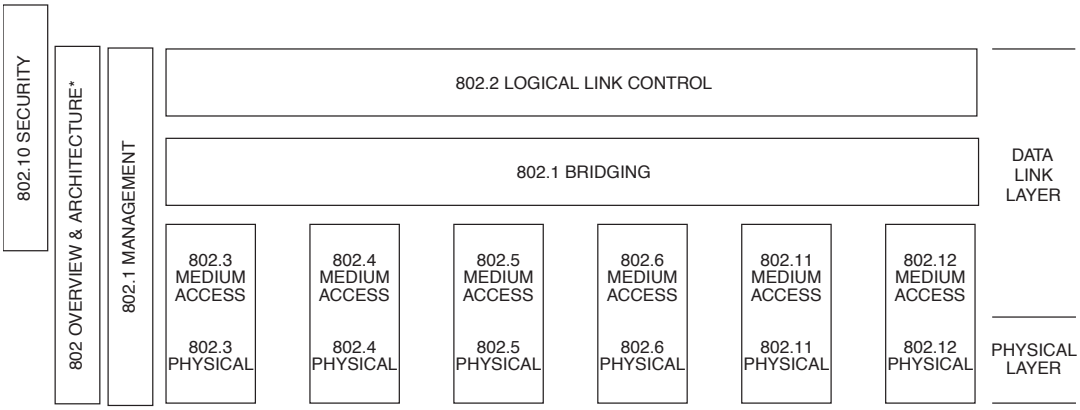

* Formerly IEEE Std 802.1A.

This family of standards deals with the Physical and Data Link layers as defined by the International Organization for Standardization (ISO) Open Systems Interconnection (OSI) Basic Reference Model (ISO/IEC 7498-1: 1994). The access standards define seven types of medium access technologies and associated physical media, each appropriate for particular applications or system objectives. Other types are under investigation.

The standards defining the technologies noted above are as follows:

- IEEE Std 802 — *Overview and Architecture*. This standard provides an overview to the family of IEEE 802 Standards.
- ANSI/IEEE Std 802.1B and 802.1k [ISO/IEC 15802-2] — *LAN/MAN Management*. Defines an OSI management-compatible architecture, and services and protocol elements for use in a LAN/MAN environment for performing remote management.
- ANSI/IEEE Std 802.1D — *Media Access Control (MAC) Bridges*. Specifies an architecture and protocol for the interconnection of IEEE 802 LANs below the MAC service boundary.
- ANSI/IEEE Std 802.1E [ISO/IEC 15802-4] — *System Load Protocol*. Specifies a set of services and protocol for those aspects of management concerned with the loading of systems on IEEE 802 LANs.
- ANSI/IEEE Std 802.1F — *Common Definitions and Procedures for IEEE 802 Management Information*.
- ANSI/IEEE Std 802.1G [ISO/IEC 15802-5] — *Remote Media Access Control (MAC) Bridging*. Specifies extensions for the interconnection, using non-LAN communication technologies, of geographically separated IEEE 802 LANs below the level of the logical link control protocol.
- IEEE Std 802.1H [ISO/IEC TR 11802-5] — *Media Access Control (MAC) Bridging of Ethernet V2.0 in Local Area Networks*.
- ANSI/IEEE Std 802.2 [ISO/IEC 8802-2] — *Logical Link Control*.
- ANSI/IEEE Std 802.3 — *CSMA/CD Access Method and Physical Layer Specifications*.

Copyright © 2000 IEEE. All rights reserved.

Authorized licensed use limited to: N.C. State University Libraries - Acquisitions & Discovery S. Downloaded on November 14,2023 at 14:15:01 UTC from IEEE Xplore. Restrictions apply.

Cisco v. Corrigent - IPR2023-00447
Patent Owner Corrigent Exhibit 2012-0003

- ANSI/IEEE Std 802.4 [ISO/IEC 8802-4] *Token Passing Bus Access Method and Physical Layer Specifications.*
- ANSI/IEEE Std 802.5 [ISO/IEC 8802-5] *Token Ring Access Method and Physical Layer Specifications.*
- ANSI/IEEE Std 802.6 [ISO/IEC 8802-6] *Distributed Queue Dual Bus Access Method and Physical Layer Specifications.*
- ANSI/IEEE Std 802.10 *Interoperable LAN/MAN Security.*
- ANSI/IEEE Std 802.11 [ISO/IEC DIS 8802-11] *Wireless LAN Medium Access Control (MAC) and Physical Layer Specifications.*
- ANSI/IEEE Std 802.12 [ISO/IEC 8802-12] *Demand Priority Access Method, Physical Layer and Repeater Specifications.*

In addition to the family of standards, the following is a recommended practice for a common Physical Layer technology:

- IEEE Std 802.7 *IEEE Recommended Practice for Broadband Local Area Networks.*

Conformance test methodology

An additional standard, 1802.3 provides conformance test information for 10BASE-T.

IEEE Std 802.3ad-2000

This standard contains state-of-the-art material. The area covered by this standard is undergoing evolution. Revisions are anticipated to this standard within the next few years to clarify existing material, to correct possible errors, and to incorporate new related material. Details on the contents of this standard are provided on the following pages.

Copyright © 2000 IEEE. All rights reserved.
Authorized licensed use limited to: N.C. State University Libraries - Acquisitions & Discovery S. Downloaded on November 14,2023 at 14:15:01 UTC from IEEE Xplore. Restrictions apply.
Cisco v. Corrigent - IPR2023-00447
Patent Owner Corrigent Exhibit 2012-0004

Participants

The following is a list of voters at the time the IEEE 802.3 Working Group balloted this standard:

Geoffrey O. Thompson, *Chair*
David J. Law, *Vice Chair*
Robert M. Grow, *Secretary*
Steven Haddock, *Chair, 802.3ad Task Force*
Tony Jeffree, *Co-editor*
Rich Seifert, *Co-editor*

Oscar Agazzi
Don Alderrou
Abe Ali
Khaled Amer
Ralph Andersson
Ken-ichi Arai
Kameran Azadet
Keith Balmer
Denis Beaudoin
John L. Bestel
Michel Bohbot
Brad J. Booth
Paul Bottorff
Gary Bourque
Steve Brewer
Vince Bridgers
Benjamin Brown
Lisa Buckman
Robert Busse
Richard Cam
Bob Campbell
Edward G. Chang
Edward S. Chang
Hon Wah Chin
Chris Christ
Terry Cobb
Edward Cornejo
John Creigh
Kevin Daines
Tom Debiec
Chris Di Minico
Erik Dickens
Thomas J. Dineen
Dan Dove
Steve Dreyer
George Eisler
Michael Elswick
John F. Ewen
Mark Feuerstraeter
Jens Fiedler
Norival Figueira
Alan Flatman
Howard M. Frazier
Scott Fritz
Darrell Furlong
Giorgio Giaretta
Joel Goergen
Robert M. Grow
Bin Guo
Stephen R. Haddock
Atikem Haile-Mariam
Del Hanson
Doug Harshbarger
Lloyd Hasley
Marwan Hassoun
Mehdi Hatamian
Gaby Hecht
Ken Herrity
John Hill
Henry Hinrichs
Clarence Joh
Thomas K. Jørgensen
Juan Jover
Paul Jury
Shinkyo Kaku
Mohan Kalkunte
Amrit Kalla
Hadriel Kaplan
Jaime Kardontchik
Toyoyuki Kato
Yongbum Kim
Christine Koenig
Paul F. Kolesar
Kishan Rao Konda
Josef Kosilek
Hans Lackner
Daun Langston
Loren Larsen
David Law
Brian E. Lemoff
George Lin
Jeffrey Lynch
Brian MacLeod
Kenneth MacLeod
Rabih Makarem
Robert A. Marsland
David W. Martin
Thomas Mathey
Tremont Miao
Colin Mick
Larry Miller
Cindy Montstream
Robert Mortonson
Simon Moseley
Shimon Muller
Denis Murphy
Yaron Nachman
Ken Naganuma
Hari Naidu
Paul Nikolich
Michael Nootbaar
Bob Noseworthy
Mark Nowell
Satoshi Obara
Toshio Ooka
Don Pannell
John Payne
Robert Pieters
John Proffitt
Steve Pryor
William Quackenbush
Sailesh K. Rao
Peter Rautenberg
Carlos Rodriguez
Shawn Rogers
Floyd E. Ross
Tam Ross
Larry Rubin
Peter Sallaway
Bill Sarles
J. David Schell
Ted Schroeder
Rich Seifert
Lee Sendelbach
Koichiro Seto
Som Sikdar
Michael A. Smith
David Sorensen
Michel Sørenson
Ronald Steudler
Stephen Strong
Steve Swanson
Tad Szostak
Rich Taborek
Pat Thaler
R. Jonathan Thatcher
Walter Thirion
Geoffrey Thompson
Douglas Thomson
Bruce Tolley
Zbigniew Turlej
Edward Turner
Schelto van Doorn
Dono Van-Mierop
Nader Vijeh
Greg Wang
Peter Wang
Jim Welch
Willem Wery
Joris Wils
John Wolcott
David Wong
Chong Ho Yoon
Leonard Young
Ben Yu
Jing-fan Zhang

The following is a list of IEEE 802.1 members who voted on this standard:

Norman Finn
Sharam Hakimi
Tony Jeffree
Daniel Kelley
Atsushi Kimoto
Keith Klamm
Bill Lidinsky
Luc Pariseau
Anil Rijsinghani
Mick Seaman
Alexander Smith
Andrew Smith
Bob Williams
Michael Wright

Copyright © 2000 IEEE. All rights reserved.

Authorized licensed use limited to: N.C. State University Libraries - Acquisitions & Discovery S. Downloaded on November 14,2023 at 14:15:01 UTC from IEEE Xplore. Restrictions apply.

Cisco v. Corrigent - IPR2023-00447
Patent Owner Corrigent Exhibit 2012-0005

The following members of the balloting committee voted on this standard:

Don Aelmore
Don Alderrou
Kevin Barry
Brad J. Booth
Chris Byham
James T. Carlo
David E. Carlson
Linda T. Cheng
Thomas J. Dineen
Sourav K. Dutta
Paul S. Eastman
Philip H. Enslow
John W. Fendrich
Michael A. Fischer
Howard M. Frazier
Robert J. Gagliano
Gautam Garai
Robert M. Grow
Chris G. Guy
Stephen R. Haddock
Simon Harrison
Raj Jain
Tony Jeffree
Peter M. Kelly
Stuart J. Kerry
Paul F. Kolesar
Daniel R. Krent
David J. Law
Walter Levy
William Lidinsky
Randolph S. Little
Jeffrey Lynch
John L. Messenger
Bennett Meyer
David S. Millman
Warren Monroe
John E. Montague
Masahiro Morikura
Shimon Muller
Paul Nikolich
Robert O'Hara
Satoshi Obara
Charles Oestereicher
Roger Pandanda
Ronald C. Petersen
Brian D. Petry
VikramPunj
Gary S. Robinson
Floyd E. Ross
Karlheinz Schwarz
Rich Seifert
Stephen Strong
Mark-Rene Uchida
Scott A. Valcourt
Oren Yuen

When the IEEE-SA Standards Board approved this standard on 30 March 2000, it had the following membership:

Donald N. Heirman, *Chair*
James T. Carlo, *Vice Chair*
Judith Gorman, *Secretary*

Satish K. Aggarwal
Mark D. Bowman
Gary R. Engmann
Harold E. Epstein
H. Landis Floyd
Jay Forster*
Howard M. Frazier
Ruben D. Garzon
James H. Gurney
Richard J. Holleman
Lowell G. Johnson
Robert J. Kennelly
Joseph L. Koepfinger*
Peter H. Lips
L. Bruce McClung
Daleep C. Mohla
James W. Moore
Robert F. Munzner
Ronald C. Petersen
Gerald H. Peterson
John B. Posey
Gary S. Robinson
Akio Tojo
Donald W. Zipse

*Member Emeritus

Also included is the following nonvoting IEEE-SA Standards Board liaison:

Alan Cookson, *NIST Representative*
Donald R. Volzka, *TAB Representative*

Catherine K.N. Berger
IEEE Standards Project Editor

Copyright © 2000 IEEE. All rights reserved.
Authorized licensed use limited to: N.C. State University Libraries - Acquisitions & Discovery S. Downloaded on November 14,2023 at 14:15:01 UTC from IEEE Xplore. Restrictions apply.
Cisco v. Corrigent - IPR2023-00447
Patent Owner Corrigent Exhibit 2012-0006

Contents

REVISIONS TO IEEE Std 802.3, 1998 Edition AS AMENDED BY IEEE Std 802.3ac-1998 and IEEE Std 802.3ab-1999

1. 1.1 (Changes to) Overview 1
   1.3(Changes to) Normative references 2
   1.4 (Changes to) Definitions 3
   1.5 (Changes to) Abbreviations 3
   2.3 (Changes to) Detailed service specification 4

30. (Changes to) 10 Mb/s, 100 Mb/s, and 1000 Mb/s Management 5

ANNEXES

(Changes to) Annex 30A (normative) GDMO specification for IEEE 802.3 managed object classes 37

(Changes to) Annex 30B (normative) GDMO and ASN.1 definitions for management 62

(Changes to) Annex 30C (normative) SNMP MIB definitions for Link Aggregation 64

43. Link Aggregation 95

43.1 Overview 95
43.1.1 Terminology 95
43.1.2 Goals and objectives 95
43.1.3 Positioning of Link Aggregation within the IEEE 802.3 architecture 96
43.1.4 State diagram conventions 97

43.2 Link Aggregation operation 98
43.2.1 Principles of Link Aggregation 98
43.2.2 Service interfaces 99
43.2.3 Frame Collector 100
43.2.4 Frame Distributor 101
43.2.5 Marker Generator/Receiver (optional) 103
43.2.6 Marker Responder 103
43.2.7 Aggregator Parser/Multiplexer 103
43.2.8 Aggregator 104
43.2.9 Control Parser/Multiplexer 105
43.2.10 Addressing 107

43.3 Link Aggregation Control 108
43.3.1 Characteristics of Link Aggregation Control 108
43.3.2 System identification 109
43.3.3 Aggregator identification 109
43.3.4 Port identification 110
43.3.5 Capability identification 110
43.3.6 Link Aggregation Group identification 111
43.3.7 Selecting a Link Aggregation Group 113
43.3.8 Agreeing on a Link Aggregation Group 113

Copyright © 2000 IEEE. All rights reserved.

Authorized licensed use limited to: N.C. State University Libraries - Acquisitions & Discovery S. Downloaded on November 14,2023 at 14:15:01 UTC from IEEE Xplore. Restrictions apply.

Cisco v. Corrigent - IPR2023-00447
Patent Owner Corrigent Exhibit 2012-0007

43.3.9 Attaching a link to an Aggregator 113
43.3.10 Signaling readiness to transfer user data 114
43.3.11 Enabling Collection and Distribution 114
43.3.12 Monitoring the membership of a Link Aggregation Group 114
43.3.13 Detaching a link from an Aggregator 114
43.3.14 Configuration and administrative control of Link Aggregation 115
43.3.15 Link Aggregation Control state information 115

43.4 Link Aggregation Control Protocol (LACP) 116
43.4.1 LACP design elements 116
43.4.2 LACPDU structure and encoding 116
43.4.3 LACP state machine overview 120
43.4.4 Constants 122
43.4.5 Variables associated with the System 122
43.4.6 Variables associated with each Aggregator 123
43.4.7 Variables associated with each port 124
43.4.8 Variables used for managing the operation of the state machines 127
43.4.9 Functions 128
43.4.10 Timers 130
43.4.11 Messages 130
43.4.12 Receive machine 131
43.4.13 Periodic Transmission machine 133
43.4.14 Selection Logic 134
43.4.15 Mux machine 137
43.4.16 Transmit machine 140
43.4.17 Churn Detection machines 141

43.5 Marker protocol 142
43.5.1 Introduction 142
43.5.2 Sequence of operations 143
43.5.3 Marker and Marker Response PDU structure and encoding 143
43.5.4 Protocol definition 145

43.6 Configuration capabilities and restrictions 146
43.6.1 Use of system and port priorities 146
43.6.2 Dynamic allocation of operational Keys 147
43.6.3 Link Aggregation on shared-medium links 148
43.6.4 Selection Logic variants 148

43.7 Protocol Implementation Conformance Statement (PICS) proforma for Clause 43, Link Aggregation 149
43.7.1 Introduction 149
43.7.2 Major capabilities/options 149
43.7.3 Frame Collector 150
43.7.4 Identification 150

Copyright © 2000 IEEE. All rights reserved.
Authorized licensed use limited to: N.C. State University Libraries - Acquisitions & Discovery S. Downloaded on November 14,2023 at 14:15:01 UTC from IEEE Xplore. Restrictions apply.
Cisco v. Corrigent - IPR2023-00447
Patent Owner Corrigent Exhibit 2012-0008

43.7.5 Frame Distributor 151
43.7.6 Marker protocol 151
43.7.7 Aggregator Parser/Multiplexer 151
43.7.8 Control Parser/Multiplexer 152
43.7.9 System identification 152
43.7.10 Aggregator identification 152
43.7.11 Port identification 152
43.7.12 Capability identification 153
43.7.13 Link Aggregation Group identification 153
43.7.14 Detaching a link from an Aggregator 153
43.7.15 LACPDU structure 153
43.7.16 State machine variables 154
43.7.17 Receive machine 154
43.7.18 Periodic Transmission machine 154
43.7.19 Selection Logic 155
43.7.20 Mux machine 155
43.7.21 Transmit machine 156
43.7.22 Churn Detection machines 156
43.7.23 Marker protocol 157
43.7.24 Configuration capabilities and restrictions 157
43.7.25 Link Aggregation on shared-medium links 158

Annex 43A (informative) Collection and Destribution functions 159

Annex 43B (informative) Requirements for support of Slow Protocols 163

Annex 43C (informative) LACP standby link selection and dynamic Key management 168

Copyright © 2000 IEEE. All rights reserved.

Authorized licensed use limited to: N.C. State University Libraries - Acquisitions & Discovery S. Downloaded on November 14,2023 at 14:15:01 UTC from IEEE Xplore. Restrictions apply.

Cisco v. Corrigent - IPR2023-00447
Patent Owner Corrigent Exhibit 2012-0009

Authorized licensed use limited to: N.C. State University Libraries - Acquisitions & Discovery S. Downloaded on November 14,2023 at 14:15:01 UTC from IEEE Xplore. Restrictions apply.

Cisco v. Corrigent - IPR2023-00447
Patent Owner Corrigent Exhibit 2012-0010

Information technology—

Telecommunications and information exchange between systems—

Local and metropolitan area networks—Specific requirements—

Amendment to Carrier Sense Multiple Access with Collision Detection (CSMA/CD) Access Method and Physical Layer Specifications—

Changes to IEEE Std 802.3, 1998 Edition as amended by IEEE Std 802.3ac-1998 and IEEE Std 802.3ab-1999

[These changes are part of IEEE 802.3, 1998 Edition]

EDITORIAL NOTE—This amendment is based on the current edition of IEEE Std 802.3, 1998 Edition, and approved amendments 802.3ac and 802.3ab. The editing instructions define how to merge the material contained here into this base document set to form the new comprehensive standard as created by the addition of IEEE Std 802.3ad-2000.

Editing instructions are shown in ***bold italic***. Three editing instructions are used: change, delete, and insert. ***Change*** is used to make small corrections in existing text or tables. The editing instruction specifies the location of the change and describes what is being changed either by using strikethrough (to remove old material) or underscore (to add new material). ***Delete*** removes existing material. ***Insert*** adds new material without disturbing the existing material. Insertions may require renumbering. If so, renumbering instructions are given in the editing instruction. Editorial notes will not be carried over into future editions. ***Replace*** is used to make large changes in existing text, subclauses, tables, or figures by removing existing material and replacing it with new material. Editorial notes will not be carried over into future editions because the changes will be incorporated into the base standard.

1.1 Overview

Insert the following sentence at the end of the first paragraph of 1.1:

In addition, it specifies a method for linearly incrementing a system's data rate by aggregating multiple physical links of the same speed into one logical link.

Copyright © 2000 IEEE. All rights reserved.

Authorized licensed use limited to: N.C. State University Libraries - Acquisitions & Discovery S. Downloaded on November 14,2023 at 14:15:01 UTC from IEEE Xplore. Restrictions apply.

Cisco v. Corrigent - IPR2023-00447
Patent Owner Corrigent Exhibit 2012-0011

1.3 Normative references

Insert the following references in alphanumeric order into the reference list in 1.3.

IETF RFC 1155, *Structure and Identification of Management Information for TCP/IP-based Internets,* Rose, M., and K. McCloghrie, May 1990.[1]

IETF RFC 1157, *A Simple Network Management Protocol (SNMP),* Case, J., Fedor, M., Schoffstall, M., and J. Davin, May 1990.

IETF RFC 1212, *Concise MIB Definitions,* Rose, M., and K. McCloghrie, March 1991.

IETF STD 17, RFC 1213, *Management Information Base for Network Management of TCP/IP-based internets: MIB-II,* McCloghrie K., and M. Rose, Editors, March 1991.

IETF RFC 1215, *A Convention for Defining Traps for use with the SNMP,* M. Rose, March 1991.

IETF RFC 1901, *Introduction to Community-based SNMPv2,* Case, J., McCloghrie, K., Rose, M., and S. Waldbusser, January 1996.

IETF RFC 1902, *Structure of Management Information for Version 2 of the Simple Network Management Protocol (SNMPv2),* Case, J., McCloghrie, K., Rose, M., and S. Waldbusser, January 1996.

IETF RFC 1903, *Textual Conventions for Version 2 of the Simple Network Management Protocol (SNMPv2),* Case, J., McCloghrie, K., Rose, M., and S. Waldbusser, January 1996.

IETF RFC 1904, *Conformance Statements for Version 2 of the Simple Network Management Protocol (SNMPv2),* Case, J., McCloghrie, K., Rose, M., and S. Waldbusser, January 1996.

IETF RFC 1905, *Protocol Operations for Version 2 of the Simple Network Management Protocol (SNMPv2),* Case, J., McCloghrie, K., Rose, M., and S. Waldbusser, January 1996.

IETF RFC 1906, *Transport Mappings for Version 2 of the Simple Network Management Protocol (SNMPv2),* Case, J., McCloghrie, K., Rose, M., and S. Waldbusser, January 1996.

IETF RFC 2233, *The Interfaces Group MIB using SMIv2,* McCloghrie, K., and F. Kastenholz, November 1997.

IETF RFC 2271, *An Architecture for Describing SNMP Management Frameworks,* Harrington, D., Presuhn, R., and B. Wijnen, January 1998.

IETF RFC 2272, *Message Processing and Dispatching for the Simple Network Management Protocol (SNMP),* Case, J., Harrington D., Presuhn R., and B. Wijnen, January 1998.

IETF RFC 2273, *SNMPv3 Applications,* Levi, D., Meyer, P., and B. Stewart, January 1998.

IETF RFC 2274, *User-based Security Model (USM) for version 3 of the Simple Network Management Protocol (SNMPv3),* Blumenthal, U., and B. Wijnen, January 1998.

IETF RFC 2275, *View-based Access Control Model (VACM) for the Simple Network Management Protocol (SNMP),* Wijnen, B., Presuhn, R., and K. McCloghrie, January 1998.

ISO/IEC 15802-1: 1995, Information technology—Telecommunications and information exchange between systems—Local and metropolitan area networks—Common specifications—Part 1: Medium Access Control (MAC) service definition.[2]

---

[1]IETF RFCs are available from the Internet Engineering Task Force website at http://www.ietf.org/rfc.html.

[2]ISO/IEC publications are available from the ISO Central Secretariat, Case Postale 56, 1 rue de Varembé, CH-1211, Genève 20, Switzerland/Suisse (http://www.iso.ch/). ISO publications are also available in the United States from the Sales Department, American National Standards Institute, 11 West 42nd Street, 13th Floor, New York, NY 10036, USA (http://www.ansi.org/).

Copyright © 2000 IEEE. All rights reserved.
Authorized licensed use limited to: N.C. State University Libraries - Acquisitions & Discovery S. Downloaded on November 14,2023 at 14:15:01 UTC from IEEE Xplore. Restrictions apply.
Cisco v. Corrigent - IPR2023-00447
Patent Owner Corrigent Exhibit 2012-0012

1.4 Definitions

Insert the following definitions at the end of 1.4. These definitions will be renumbered in alphabetic order in a future edition and placed in the proper sequence with other definitions:

1.4.xxx Actor: The local entity in a Link Aggregation Control Protocol exchange. (See IEEE 802.3 Clause 43.)

1.4.xxx Aggregation Key: A parameter associated with each port and with each aggregator of an Aggregation System identifying those ports that can be aggregated together. Ports in an Aggregation System that share the same Aggregation Key value are potentially able to aggregate together. (See IEEE 802.3 Clause 43.)

1.4.xxx Aggregation Link: An instance of a MAC-Physical Layer-Medium Physical Layer-MAC entity between a pair of Aggregation Systems. (See IEEE 802.3 Clause 43.)

1.4.xxx Aggregation Port: An instance of a MAC-Physical Layer entity within an Aggregation System. (See IEEE 802.3 Clause 43.)

1.4.xxx Aggregation System: A uniquely identifiable entity comprising (among other things) an arbitrary grouping of one or more ports for the purpose of aggregation. An instance of an aggregated link always occurs between exactly two Aggregation Systems. A physical device may comprise a single Aggregation System or more than one Aggregation System. (See IEEE 802.3 Clause 43.)

1.4.xxx Conversation: A set of MAC frames transmitted from one end station to another, where all of the MAC frames form an ordered sequence, and where the communicating end stations require the ordering to be maintained among the set of MAC frames exchanged. (See IEEE 802.3 Clause 43.)

1.4.xxx end station: A system attached to a LAN that is an initial source or a final destination of MAC frames transmitted across that LAN. A Network layer router is, from the perspective of the LAN, an end station; a MAC Bridge, in its role of forwarding MAC frames from one LAN to another, is not an end station. (See IEEE 802.3 Clause 43.)

1.4.xxx Link Aggregation Group: A group of links that appear to a MAC Client as if they were a single link. All links in a Link Aggregation Group connect between the same pair of Aggregation Systems. One or more conversations may be associated with each link that is part of a Link Aggregation Group. (See IEEE 802.3 Clause 43.).

1.4.xxx Partner: The remote entity in a Link Aggregation Control Protocol exchange. (See IEEE 802.3 Clause 43.)

1.5 Abbreviations

Insert the following abbreviations alphabetically in the list in 1.5:

LACP	Link Aggregation Control Protocol
LACPDU	Link Aggregation Control Protocol Data Unit
LAG	Link Aggregation Group
LAG ID	Link Aggregation Group Identifier
Mux	Multiplexer
NTT	Need To Transmit
PDU	Protocol Data Unit
TLV	Type/Length/Value

Copyright © 2000 IEEE. All rights reserved.

Authorized licensed use limited to: N.C. State University Libraries - Acquisitions & Discovery S. Downloaded on November 14,2023 at 14:15:01 UTC from IEEE Xplore. Restrictions apply.

Cisco v. Corrigent - IPR2023-00447
Patent Owner Corrigent Exhibit 2012-0013

2.3 Detailed service specification

Change the subclauses as indicated:

2.3.1 MA_DATA.request

2.3.1.2 Semantics of the service primitive

The semantics of the primitive are as follows:

```
MA_DATA.request        (
                       destination_address,
                       source_address,
                       m_sdu,
                       service_class
                       )
```

The destination_address parameter may specify either an individual or a group MAC entity address. It must contain sufficient information to create the DA field that is prepended to the frame by the local MAC sublayer entity and any physical information. The source_address parameter, if present, must specify an individual MAC address. If the source_address parameter is omitted, the local MAC sublayer entity will insert a value associated with that entity. The m_sdu parameter specifies the MAC service data unit to be transmitted by the MAC sublayer entity. There is sufficient information associated with m_sdu for the MAC sublayer entity to determine the length of the data unit. The service_class parameter indicates a quality of service requested by the MAC client (see 2.3.1.5).

EDITORIAL NOTE—New insert text is “source_address” in the three instances above.

Copyright © 2000 IEEE. All rights reserved.
Authorized licensed use limited to: N.C. State University Libraries - Acquisitions & Discovery S. Downloaded on November 14,2023 at 14:15:01 UTC from IEEE Xplore. Restrictions apply.
Cisco v. Corrigent - IPR2023-00447
Patent Owner Corrigent Exhibit 2012-0014

30. 10 Mb/s, 100 Mb/s, and 1000 Mb/s Management

Change the title of this clause as follows:

30. 10 Mb/s, 100 Mb/s, ~~and~~ 1000 Mb/s, MAC Control, and Link Aggregation Management

Change the first paragraph of this clause as follows:

This clause provides the Layer Management specification for DTEs, repeaters, and MAUs based on the CSMA/CD access method. The clause is produced from the ISO framework additions to Clause 5, Layer Management; Clause 19, Repeater Management; and Clause 20, MAU Management. It incorporates additions to the objects, attributes, and behaviors to support 100 Mb/s and 1000 Mb/s CSMA/CD, full duplex operation, MAC Control, and Link Aggregation.

30.2 Managed objects

30.2.2.1 Text description of managed objects

Change the first paragraph of 30.2.2.1 as shown:

In case of conflict, the formal behavior definitions in 30.3, 30.4, 30.5, ~~and~~ 30.6, and 30.7 take precedence over the text descriptions in this subclause.

Insert the following text immediately before the description of oMACControlEntity:

oAggregator — If implemented, oAggregator is the top-most managed object class of the DTE portion of the containment tree shown in Figure 30-3. Note that this managed object class may be contained within another superior managed object class. Such containment is expected, but is outside the scope of this International Standard. The oAggregator managed object class provides the management controls necessary to allow an instance of an Aggregator to be managed.

oAggregationPort — If oAggregator is implemented, oAggregationPort is contained within oAggregator. An instance of this managed object class is present for each Aggregation Port that is part of the aggregation represented by the oAggregator instance. This managed object class provides the basic management controls necessary to allow an instance of an Aggregation Port to be managed, for the purposes of Link Aggregation.

oAggPortStats — If oAggregator is implemented, a single instance of oAggPortStats may be contained within oAggregationPort. This managed object class provides optional additional statistics related to LACP and Marker protocol activity on an instance of an Aggregation Port that is involved in Link Aggregation.

Copyright © 2000 IEEE. All rights reserved.

Authorized licensed use limited to: N.C. State University Libraries - Acquisitions & Discovery S. Downloaded on November 14,2023 at 14:15:01 UTC from IEEE Xplore. Restrictions apply.

Cisco v. Corrigent - IPR2023-00447
Patent Owner Corrigent Exhibit 2012-0015

oAggPortDebugInformation If oAggregator is implemented, a single instance of oAggPortDebugInformation may be contained within oAggregationPort. This managed object class provides optional additional information that can assist with debugging and fault finding in Systems that support Link Aggregation.

Change the descriptions of oMACControlEntity and oMACEntity as shown:

oMACControlEntity If implemented, and if oAggregator is implemented, oMACControlEntity is contained within oAggregator. Otherwise, if implemented, oMACControlEntity becomes the top-most managed object class of the DTE portion of the containment tree shown in Figure 30-3. Note that this managed object class may be contained within another superior managed object class. Such containment is expected, but is outside the scope of this International Standard.

oMACEntity If oMACControlEntity is implemented, oMACEntity is contained within oMACControlEntity. Otherwise, if oAggregator is implemented, oMACEntity is contained within oAggregator. Otherwise, oMACEntity~~it~~ becomes the top-most managed object class of the DTE portion of the containment tree shown in Figure 30-3. Note that this managed object class may be contained within another superior managed object class. Such containment is expected, but is outside the scope of this International Standard.

30.2.3 Containment

Change the first paragraph of 30.2.3 as shown:

A containment relationship is a structuring relationship for managed objects in which the existence of a contained managed object is dependent on the existence of a containing managed object. The contained managed object is said to be the subordinate managed object, and the containing managed object is said to be the superior man-aged object. The containment relationship is used for naming managed objects. The local containment relationships among object classes are depicted in the entity relationship diagram, Figure 30-3. This figure ~~also~~ shows the names~~, naming attributes, and data attributes~~ of the object classes~~ as well as~~ and whether a particular containment relationship is one-to-one or one-to-many. For further requirements on this topic, see IEEE Std 802.1F-1993.

Copyright © 2000 IEEE. All rights reserved.
Authorized licensed use limited to: N.C. State University Libraries - Acquisitions & Discovery S. Downloaded on November 14,2023 at 14:15:01 UTC from IEEE Xplore. Restrictions apply.
Cisco v. Corrigent - IPR2023-00447
Patent Owner Corrigent Exhibit 2012-0016

Change Figure 30-3 as shown:

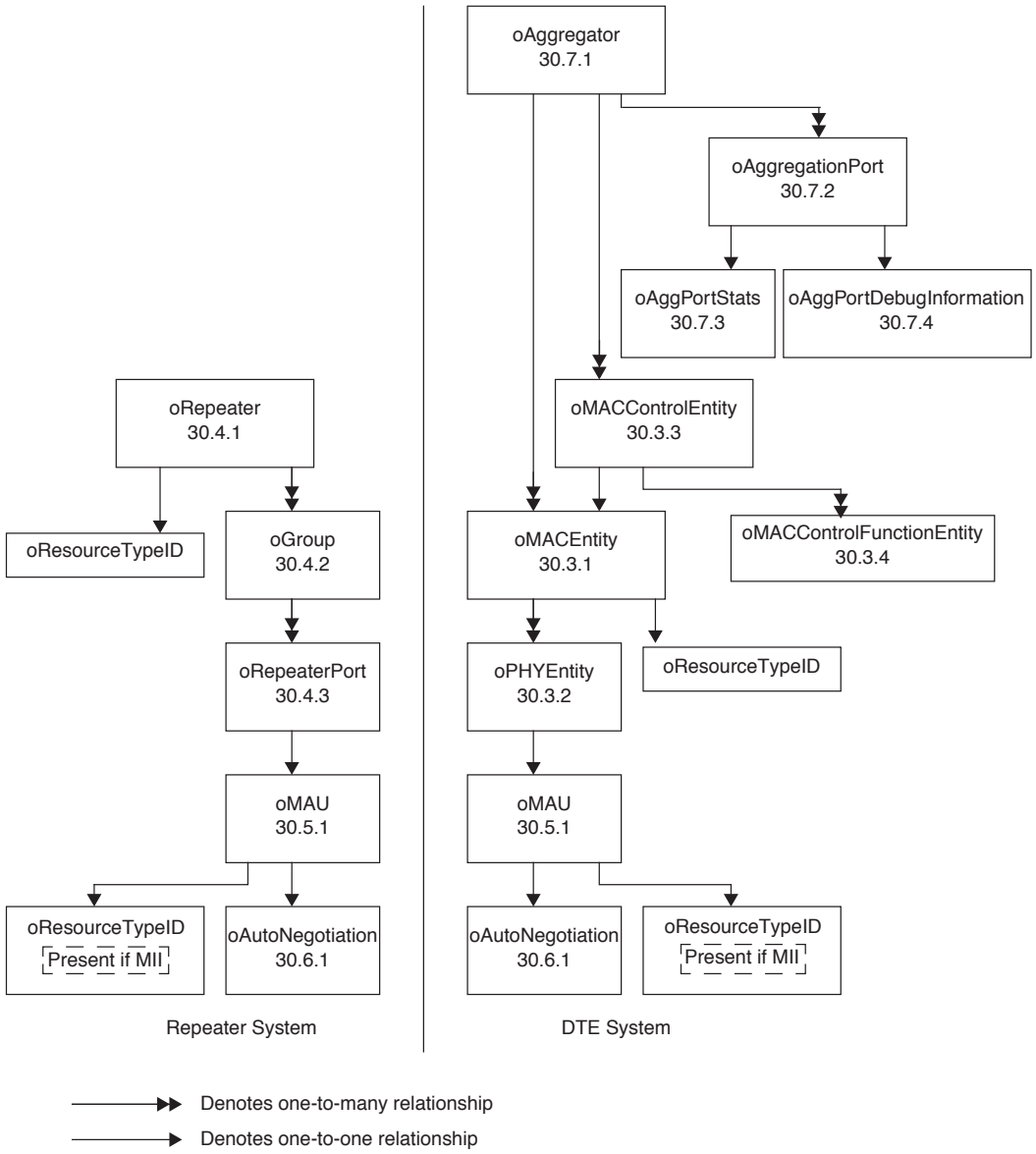

Figure 30-3—10/100/1000 Mb/s MAC, Control, and Link Aggregation entity relationship diagram

Copyright © 2000 IEEE. All rights reserved.

Authorized licensed use limited to: N.C. State University Libraries - Acquisitions & Discovery S. Downloaded on November 14,2023 at 14:15:01 UTC from IEEE Xplore. Restrictions apply.
Cisco v. Corrigent - IPR2023-00447
Patent Owner Corrigent Exhibit 2012-0017

30.2.5 Capabilities

Change the first two paragraphs of 30.2.5 as shown:

This standard makes use of the concept of *packages,* as defined in ISO/IEC 10165-4: 1992, as a means of grouping behavior, attributes, actions, and notifications within a managed object class definition. Packages may be either mandatory or conditional, that is to say, present if a given condition is true. Within this standard *capabilities* are defined, each of which corresponds to a set of packages that are components of a number of managed object class definitions and that share the same condition for presence. Implementation of the appropriate basic and mandatory packages is the minimum requirement for claiming conformance to IEEE 802.3 10 Mb/s, 100 Mb/s, ~~and~~ 1000 Mb/s, MAC Control, and Link Aggregation Management. Implementation of an entire optional capability is required in order to claim conformance to that capability. The capabilities and packages for 10 Mb/s, 100 Mb/s, and 1000 Mb/s Management are specified in Table 30-1a, Table 30-1b, Table 30-1c, Table 30-1d, and Table 30-1e. The capabilities and packages for Link Aggregation Management are specified in Table 30-2.

DTE Management has two packages that are required for management at the minimum conformance configuration—the Basic Package and the Mandatory Package. Systems that implement the optional MAC Control sublayer shall also implement the Basic and Mandatory Packages for the MAC Control Entity managed object class to claim DTE minimum conformance. For systems that include multiple PHY entities per MAC entity and implement the Multiple PHY Package to manage the selection of the active PHY, the optional Recommended Package shall be implemented. Systems that implement the optional Link Aggregation sublayer shall also implement the Basic and Mandatory Packages for the Aggregator and Aggregation Port managed object class to claim minimum DTE conformance.

Insert new Table 30-2, as shown:

Table 30-2—Link Aggregation Capabilities

				DTE					
	Object Name	**Object Type**	**Operations Supported**	**Basic Package (Mandatory)**	**Mandatory Package (Mandatory)**	**Recommended Package (Optional)**	**Optional Package (Optional)**	**Aggregation Port Statistics (Optional)**	**Aggregation Port Debug Information (Optional)**
oAggregator (30.7.1)									
	aAggID	ATTRIBUTE	GET	X					
	aAggDescription	ATTRIBUTE	GET		X				
	aAggName	ATTRIBUTE	GET-SET		X				
	aAggActorSystemID	ATTRIBUTE	GET-SET		X				

Copyright © 2000 IEEE. All rights reserved.
Authorized licensed use limited to: N.C. State University Libraries - Acquisitions & Discovery S. Downloaded on November 14,2023 at 14:15:01 UTC from IEEE Xplore. Restrictions apply.
Cisco v. Corrigent - IPR2023-00447
Patent Owner Corrigent Exhibit 2012-0018

Table 30-2—Link Aggregation Capabilities (continued)

				DTE					
	Object Name	Object Type	Operations Supported	Basic Package (Mandatory)	Mandatory Package (Mandatory)	Recommended Package (Optional)	Optional Package (Optional)	Aggregation Port Statistics (Optional)	Aggregation Port Debug Information (Optional)
	aAggActorSystemPriority	ATTRIBUTE	GET-SET		X				
	aAggAggregateOrIndividual	ATTRIBUTE	GET		X				
	aAggActorAdminKey	ATTRIBUTE	GET-SET		X				
	aAggActorOperKey	ATTRIBUTE	GET		X				
	aAggMACAddress	ATTRIBUTE	GET		X				
	aAggPartnerSystemID	ATTRIBUTE	GET		X				
	aAggPartnerSystemPriority	ATTRIBUTE	GET		X				
	aAggPartnerOperKey	ATTRIBUTE	GET		X				
	aAggAdminState	ATTRIBUTE	GET-SET		X				
	aAggOperState	ATTRIBUTE	GET		X				
	aAggTimeOfLastOperChange	ATTRIBUTE	GET		X				
	aAggDataRate	ATTRIBUTE	GET		X				
	aAggOctetsTxOK	ATTRIBUTE	GET			X			
	aAggOctetsRxOK	ATTRIBUTE	GET			X			
	aAggFramesTxOK	ATTRIBUTE	GET		X				
	aAggFramesRxOK	ATTRIBUTE	GET		X				
	aAggMulticastFramesTxOK	ATTRIBUTE	GET				X		
	aAggMulticastFramesRxOK	ATTRIBUTE	GET				X		
	aAggBroadcastFramesTxOK	ATTRIBUTE	GET				X		
	aAggBroadcastFramesRxOK	ATTRIBUTE	GET				X		
	aAggFramesDiscardedOnTx	ATTRIBUTE	GET			X			
	aAggFramesDiscardedOnRx	ATTRIBUTE	GET			X			
	aAggFramesWithTxErrors	ATTRIBUTE	GET			X			
	aAggFramesWithRxErrors	ATTRIBUTE	GET			X			
	aAggUnknownProtocolFrames	ATTRIBUTE	GET			X			
	aAggLinkUpDownNotificationEnable	ATTRIBUTE	GET-SET		X				

Copyright © 2000 IEEE. All rights reserved.

Authorized licensed use limited to: N.C. State University Libraries - Acquisitions & Discovery S. Downloaded on November 14,2023 at 14:15:01 UTC from IEEE Xplore. Restrictions apply.

Cisco v. Corrigent - IPR2023-00447
Patent Owner Corrigent Exhibit 2012-0019

Table 30-2—Link Aggregation Capabilities (continued)

				DTE					
	Object Name	Object Type	Operations Supported	Basic Package (Mandatory)	Mandatory Package (Mandatory)	Recommended Package (Optional)	Optional Package (Optional)	Aggregation Port Statistics (Optional)	Aggregation Port Debug Information (Optional)
	nAggLinkUpNotification	NOTIFICATION			X				
	nAggLinkDownNotification	NOTIFICATION			X				
	aAggPortList	ATTRIBUTE	GET			X			
	aAggCollectorMaxDelay	ATTRIBUTE	GET-SET		X				
oAggregationPort (30.7.2)									
	aAggPortID	ATTRIBUTE	GET	X					
	aAggPortActorSystemPriority	ATTRIBUTE	GET-SET		X				
	aAggPortActorSystemID	ATTRIBUTE	GET		X				
	aAggPortActorAdminKey	ATTRIBUTE	GET-SET		X				
	aAggPortActorOperKey	ATTRIBUTE	GET		X				
	aAggPortPartnerAdminSystemPriority	ATTRIBUTE	GET-SET		X				
	aAggPortPartnerOperSystemPriority	ATTRIBUTE	GET		X				
	aAggPortPartnerAdminSystemID	ATTRIBUTE	GET-SET		X				
	aAggPortPartnerOperSystemID	ATTRIBUTE	GET		X				
	aAggPortPartnerAdminKey	ATTRIBUTE	GET-SET		X				
	aAggPortPartnerOperKey	ATTRIBUTE	GET		X				
	aAggPortSelectedAggID	ATTRIBUTE	GET		X				
	aAggPortAttachedAggID	ATTRIBUTE	GET		X				
	aAggPortActorPort	ATTRIBUTE	GET		X				
	aAggPortActorPortPriority	ATTRIBUTE	GET-SET		X				
	aAggPortPartnerAdminPort	ATTRIBUTE	GET-SET		X				
	aAggPortPartnerOperPort	ATTRIBUTE	GET		X				
	aAggPortPartnerAdminPortPriority	ATTRIBUTE	GET-SET		X				
	aAggPortPartnerOperPortPriority	ATTRIBUTE	GET		X				
	aAggPortActorAdminState	ATTRIBUTE	GET-SET		X				
	aAggPortActorOperState	ATTRIBUTE	GET		X				

Copyright © 2000 IEEE. All rights reserved.
Authorized licensed use limited to: N.C. State University Libraries - Acquisitions & Discovery S. Downloaded on November 14,2023 at 14:15:01 UTC from IEEE Xplore. Restrictions apply.
Cisco v. Corrigent - IPR2023-00447
Patent Owner Corrigent Exhibit 2012-0020

Table 30-2—Link Aggregation Capabilities (continued)

				DTE					
	Object Name	**Object Type**	**Operations Supported**	**Basic Package (Mandatory)**	**Mandatory Package (Mandatory)**	**Recommended Package (Optional)**	**Optional Package (Optional)**	**Aggregation Port Statistics (Optional)**	**Aggregation Port Debug Information (Optional)**
	aAggPortPartnerAdminState	ATTRIBUTE	GET-SET		X				
	aAggPortPartnerOperState	ATTRIBUTE	GET		X				
	aAggPortAggregateOrIndividual	ATTRIBUTE	GET		X				
oAggPortStats (30.7.3)									
	aAggPortStatsID	ATTRIBUTE	GET					X	
	aAggPortStatsLACPDUsRx	ATTRIBUTE	GET					X	
	aAggPortStatsMarkerPDUsRx	ATTRIBUTE	GET					X	
	aAggPortStatsMarkerResponsePDUsRx	ATTRIBUTE	GET					X	
	aAggPortStatsUnknownRx	ATTRIBUTE	GET					X	
	aAggPortStatsIllegalRx	ATTRIBUTE	GET					X	
	aAggPortStatsLACPDUsTx	ATTRIBUTE	GET					X	
	aAggPortStatsMarkerPDUsTx	ATTRIBUTE	GET					X	
	aAggPortStatsMarkerResponsePDUsTx	ATTRIBUTE	GET					X	
oAggPortDebugInformation (30.7.4)									
	aAggPortDebugInformationID	ATTRIBUTE	GET						X
	aAggPortDebugRxState	ATTRIBUTE	GET						X
	aAggPortDebugLastRxTime	ATTRIBUTE	GET						X
	aAggPortDebugMuxState	ATTRIBUTE	GET						X
	aAggPortDebugMuxReason	ATTRIBUTE	GET						X
	aAggPortDebugActorChurnState	ATTRIBUTE	GET						X
	aAggPortDebugPartnerChurnState	ATTRIBUTE	GET						X
	aAggPortDebugActorChurnCount	ATTRIBUTE	GET						X
	aAggPortDebugPartnerChurnCount	ATTRIBUTE	GET						X
	aAggPortDebugActorSyncTransitionCount	ATTRIBUTE	GET						X
	aAggPortDebugPartnerSyncTransitionCount	ATTRIBUTE	GET						X
	aAggPortDebugActorChangeCount	ATTRIBUTE	GET						X

Copyright © 2000 IEEE. All rights reserved.

Authorized licensed use limited to: N.C. State University Libraries - Acquisitions & Discovery S. Downloaded on November 14,2023 at 14:15:01 UTC from IEEE Xplore. Restrictions apply.
Cisco v. Corrigent - IPR2023-00447
Patent Owner Corrigent Exhibit 2012-0021

Table 30-2—Link Aggregation Capabilities (continued)

				DTE					
	Object Name	**Object Type**	**Operations Supported**	**Basic Package (Mandatory)**	**Mandatory Package (Mandatory)**	**Recommended Package (Optional)**	**Optional Package (Optional)**	**Aggregation Port Statistics (Optional)**	**Aggregation Port Debug Information (Optional)**
	aAggPortDebugPartnerChangeCount	ATTRIBUTE	GET						X
Common Attributes Template									
	aCMCounter	ATTRIBUTE	GET		X	X	X	X	X

Insert new subclause 30.7 and its subordinate subclauses at the end of Clause 30, as shown:

30.7 Management for Link Aggregation

30.7.1 Aggregator managed object class

This subclause formally defines the behaviors for the oAggregator managed object class, attributes, and notifications.

Some of the attributes that are part of the definition of the oAggregator managed object class are derived by summing counter values from attributes of other objects; e.g., to generate a count of received frames for the Aggregator, the individual value for each Aggregation Port contributes to the sum. Where calculations of this form are used, the values that contribute to the Aggregator's attributes are *increments* in the values of the component attributes, not their absolute values. As any individual Aggregation Port is potentially only temporarily attached to its current Aggregator, the count values it contributes to the Aggregator's counters are the increments in its values that it has experienced during the period of time that it has been attached to that Aggregator.

The counter values defined for the Aggregator have been formulated as far as possible to make the Aggregator behave like an individual IEEE 802.3 MAC. The counts of frames received and transmitted are formulated to reflect the counts that would be expected by the MAC Client; they do not include frames transmitted and received as part of the operation of LACP or the Marker protocol, only frames that pass through the interface between the MAC Client and the Aggregator. However, as LACP and the Marker protocol are, as far as the individual MACs are concerned, part of their MAC Client, the RX/TX counters for the individual MACs will reflect both control and data traffic. As counts of errors at the port level cannot always be cleanly delineated between those that occurred as a result of aggregation activity and those that did not, no attempt has been made to separate these aspects of the port error counts. Therefore, there is not necessarily a

Copyright © 2000 IEEE. All rights reserved.
Authorized licensed use limited to: N.C. State University Libraries - Acquisitions & Discovery S. Downloaded on November 14,2023 at 14:15:01 UTC from IEEE Xplore. Restrictions apply.
Cisco v. Corrigent - IPR2023-00447
Patent Owner Corrigent Exhibit 2012-0022

direct correspondence between the individual MAC counters and the corresponding derived counters at the Aggregator level.

It should also be noted that the counters defined for the Aggregator include values that can only apply to half duplex links. This is consistent with the approach taken in Link Aggregation that a link that can only operate as an individual link is nonetheless considered as being attached to an Aggregator. This simplifies the modelling of managed objects for links that can operate in either half or full duplex, and ensures a consistent presentation of the attributes regardless of the type of links attached to the Aggregator.

NOTE—The operation of autonegotiation may mean that a given link can operate in full duplex or half duplex, depending upon the capabilities of the device(s) connected to it. Keeping the management view the same regardless of a link's current mode of operation allows a consistent management approach to be taken across all types of links.

30.7.1.1 Aggregator attributes

30.7.1.1.1 aAggID

ATTRIBUTE

APPROPRIATE SYNTAX:

INTEGER

BEHAVIOUR DEFINED AS:

The unique identifier allocated to this Aggregator by the local System. This attribute identifies an Aggregator instance among the subordinate managed objects of the containing object. This value is read-only.

NOTE—The aAggID is represented in the SNMP MIB as an ifIndex—see 30C.4.2.;

30.7.1.1.2 aAggDescription

ATTRIBUTE

APPROPRIATE SYNTAX:

A PrintableString, 255 characters max.

BEHAVIOUR DEFINED AS:

A human-readable text string containing information about the Aggregator. This string could include information about the distribution algorithm in use on this Aggregator; for example, "Aggregator 1, Dist Alg=Dest MAC address." This string is read-only. The contents are vendor specific.;

30.7.1.1.3 aAggName

ATTRIBUTE

APPROPRIATE SYNTAX:

A PrintableString, 255 characters max.

Copyright © 2000 IEEE. All rights reserved.

Authorized licensed use limited to: N.C. State University Libraries - Acquisitions & Discovery S. Downloaded on November 14,2023 at 14:15:01 UTC from IEEE Xplore. Restrictions apply.

Cisco v. Corrigent - IPR2023-00447
Patent Owner Corrigent Exhibit 2012-0023

BEHAVIOUR DEFINED AS:

A human-readable text string containing a locally significant name for the Aggregator. This string is read-write.;

30.7.1.1.4 aAggActorSystemID

ATTRIBUTE

APPROPRIATE SYNTAX:

MACAddress

BEHAVIOUR DEFINED AS:

A 6-octet read-write MAC address value used as a unique identifier for the System that contains this Aggregator.

NOTE—From the perspective of the Link Aggregation mechanisms described in Clause 43, only a single combination of Actor's System ID and System Priority are considered, and no distinction is made between the values of these parameters for an Aggregator and the port(s) that are associated with it (i.e., the protocol is described in terms of the operation of aggregation within a single System). However, the managed objects provided for the Aggregator and the port both allow management of these parameters. The result of this is to permit a single piece of equipment to be configured by management to contain more than one System from the point of view of the operation of Link Aggregation. This may be of particular use in the configuration of equipment that has limited aggregation capability (see 43.6).;

30.7.1.1.5 aAggActorSystemPriority

ATTRIBUTE

APPROPRIATE SYNTAX:

INTEGER

BEHAVIOUR DEFINED AS:

A 2-octet read-write value indicating the priority value associated with the Actor's System ID.;

30.7.1.1.6 aAggAggregateOrIndividual

ATTRIBUTE

APPROPRIATE SYNTAX:

BOOLEAN

BEHAVIOUR DEFINED AS:

A read-only Boolean value indicating whether the Aggregator represents an Aggregate ("TRUE") or an Individual link ("FALSE").;

30.7.1.1.7 aAggActorAdminKey

ATTRIBUTE

Copyright © 2000 IEEE. All rights reserved.
Authorized licensed use limited to: N.C. State University Libraries - Acquisitions & Discovery S. Downloaded on November 14,2023 at 14:15:01 UTC from IEEE Xplore. Restrictions apply.
Cisco v. Corrigent - IPR2023-00447
Patent Owner Corrigent Exhibit 2012-0024

APPROPRIATE SYNTAX:

INTEGER

BEHAVIOUR DEFINED AS:

The current administrative value of the Key for the Aggregator. The administrative Key value may differ from the operational Key value for the reasons discussed in 43.6.2. This is a 16-bit read-write value. The meaning of particular Key values is of local significance.;

30.7.1.1.8 aAggActorOperKey

ATTRIBUTE

APPROPRIATE SYNTAX:

INTEGER

BEHAVIOUR DEFINED AS:

The current operational value of the Key for the Aggregator. The administrative Key value may differ from the operational Key value for the reasons discussed in 43.6.2. This is a 16-bit read-only value. The meaning of particular Key values is of local significance.;

30.7.1.1.9 aAggMACAddress

ATTRIBUTE

APPROPRIATE SYNTAX:

MACAddress

BEHAVIOUR DEFINED AS:

A 6-octet read-only value carrying the individual MAC address assigned to the Aggregator.;

30.7.1.1.10 aAggPartnerSystemID

ATTRIBUTE

APPROPRIATE SYNTAX:

MACAddress

BEHAVIOUR DEFINED AS:

A 6-octet read-only MAC address value consisting of the unique identifier for the current protocol Partner of this Aggregator. A value of zero indicates that there is no known Partner. If the aggregation is manually configured, this System ID value will be a value assigned by the local System.;

30.7.1.1.11 aAggPartnerSystemPriority

ATTRIBUTE

Copyright © 2000 IEEE. All rights reserved.

Authorized licensed use limited to: N.C. State University Libraries - Acquisitions & Discovery S. Downloaded on November 14,2023 at 14:15:01 UTC from IEEE Xplore. Restrictions apply.

Cisco v. Corrigent - IPR2023-00447
Patent Owner Corrigent Exhibit 2012-0025

APPROPRIATE SYNTAX:

INTEGER

BEHAVIOUR DEFINED AS:

A 2-octet read-only value that indicates the priority value associated with the Partner's System ID. If the aggregation is manually configured, this System Priority value will be a value assigned by the local System.;

30.7.1.1.12 aAggPartnerOperKey

ATTRIBUTE

APPROPRIATE SYNTAX:

INTEGER

BEHAVIOUR DEFINED AS:

The current operational value of the Key for the Aggregator's current protocol Partner. This is a 16-bit read-only value. If the aggregation is manually configured, this Key value will be a value assigned by the local System.;

30.7.1.1.13 aAggAdminState

ATTRIBUTE

APPROPRIATE SYNTAX:

An ENUMERATED VALUE that has one of the following entries:
up
down

BEHAVIOUR DEFINED AS:

This read-write value defines the administrative state of the Aggregator. A value of "up" indicates that the operational state of the Aggregator (aAggOperState) is permitted to be either up or down. A value of "down" forces the operational state of the Aggregator to be down. Changes to the administrative state affect the operational state of the Aggregator only, not the operational state of the Aggregation Ports that are attached to the Aggregator. A GET operation returns the current administrative state. A SET operation changes the administrative state to a new value.;

30.7.1.1.14 aAggOperState

ATTRIBUTE

APPROPRIATE SYNTAX:

An ENUMERATED VALUE that has one of the following entries:
up
down

Copyright © 2000 IEEE. All rights reserved.
Authorized licensed use limited to: N.C. State University Libraries - Acquisitions & Discovery S. Downloaded on November 14,2023 at 14:15:01 UTC from IEEE Xplore. Restrictions apply.
Cisco v. Corrigent - IPR2023-00447
Patent Owner Corrigent Exhibit 2012-0026

BEHAVIOUR DEFINED AS:

This read-only value defines the operational state of the Aggregator. The operational state is "up" if one or more of the Aggregation Ports that are attached to the Aggregator are collecting, or both collecting and distributing, and if the value of aAggAdminState for the Aggregator is also "up." If none of the Aggregation Ports that are attached to the Aggregator are collecting and/or distributing, or if there are no Aggregation Ports attached to this Aggregator, then the operational state is "down." An operational state of "up" indicates that the Aggregator is available for use by the MAC Client; a value of "down" indicates that the Aggregator is not available for use by the MAC Client.;

30.7.1.1.15 aAggTimeOfLastOperChange

ATTRIBUTE

APPROPRIATE SYNTAX:

INTEGER

BEHAVIOUR DEFINED AS:

The value of aTimeSinceSystemReset (Annex F.2.1) at the time the interface entered its current operational state. If the current state was entered prior to the last re-initialization of the local network management subsystem, then this object contains a value of zero. This value is read-only.;

30.7.1.1.16 aAggDataRate

ATTRIBUTE

APPROPRIATE SYNTAX:

INTEGER

BEHAVIOUR DEFINED AS:

The current data rate, in bits per second, of the aggregate link. The value is calculated as N times the data rate of a single link in the aggregation, where N is the number of active links. This attribute is read-only.;

30.7.1.1.17 aAggOctetsTxOK

ATTRIBUTE

APPROPRIATE SYNTAX:

Generalized nonresettable counter. This counter has a maximum increment rate of 1 230 000 counts per second for a single 10 Mb/s aggregation.

BEHAVIOUR DEFINED AS:

A count of the data and padding octets transmitted by this Aggregator on all Aggregation Ports that are (or have been) members of the aggregation. The count does not include octets transmitted by the Aggregator in frames that carry LACPDUs or Marker PDUs (30.7.3.1.7,

Copyright © 2000 IEEE. All rights reserved.

Authorized licensed use limited to: N.C. State University Libraries - Acquisitions & Discovery S. Downloaded on November 14,2023 at 14:15:01 UTC from IEEE Xplore. Restrictions apply.

Cisco v. Corrigent - IPR2023-00447
Patent Owner Corrigent Exhibit 2012-0027

30.7.3.1.8, 30.7.3.1.9). However, it includes frames discarded by the Distribution function of the Aggregator (30.7.1.1.25). This value is read-only.;

30.7.1.1.18 aAggOctetsRxOK

ATTRIBUTE

APPROPRIATE SYNTAX:

Generalized nonresettable counter. This counter has a maximum increment rate of 1 230 000 counts per second for a single 10 Mb/s aggregation.

BEHAVIOUR DEFINED AS:

A count of the data and padding octets received by this Aggregator, from the Aggregation Ports that are (or have been) members of the aggregation. The count does not include octets received in frames that carry LACP or Marker PDUs (30.7.3.1.2, 30.7.3.1.3, 30.7.3.1.4), or frames discarded by the Collection function of the Aggregator (30.7.1.1.26). This value is read-only.;

30.7.1.1.19 aAggFramesTxOK

ATTRIBUTE

APPROPRIATE SYNTAX:

Generalized nonresettable counter. This counter has a maximum increment rate of 16 000 counts per second for a single 10 Mb/s aggregation.

BEHAVIOUR DEFINED AS:

A count of the data frames transmitted by this Aggregator on all Aggregation Ports that are (or have been) members of the aggregation. The count does not include frames transmitted by the Aggregator that carry LACP or Marker PDUs (30.7.3.1.7, 30.7.3.1.8, 30.7.3.1.9). However, it includes frames discarded by the Distribution function of the Aggregator (30.7.1.1.25). This value is read-only.;

30.7.1.1.20 aAggFramesRxOK

ATTRIBUTE

APPROPRIATE SYNTAX:

Generalized nonresettable counter. This counter has a maximum increment rate of 16 000 counts per second for a single 10 Mb/s aggregation.

BEHAVIOUR DEFINED AS:

A count of the data frames received by this Aggregator, from the Aggregation Ports that are (or have been) members of the aggregation. The count does not include frames that carry LACP or Marker PDUs (30.7.3.1.2, 30.7.3.1.3, 30.7.3.1.4), or frames discarded by the Collection function of the Aggregator (30.7.1.1.26). This value is read-only.;

Copyright © 2000 IEEE. All rights reserved.
Authorized licensed use limited to: N.C. State University Libraries - Acquisitions & Discovery S. Downloaded on November 14,2023 at 14:15:01 UTC from IEEE Xplore. Restrictions apply.
Cisco v. Corrigent - IPR2023-00447
Patent Owner Corrigent Exhibit 2012-0028

30.7.1.1.21 aAggMulticastFramesTxOK

ATTRIBUTE

APPROPRIATE SYNTAX:

Generalized nonresettable counter. This counter has a maximum increment rate of 16 000 counts per second for a single 10 Mb/s aggregation.

BEHAVIOUR DEFINED AS:

A count of the data frames transmitted by this Aggregator on all Aggregation Ports that are (or have been) members of the aggregation, to a group destination address other than the broadcast address. The count does not include frames transmitted by the Aggregator that carry LACP or Marker PDUs (30.7.3.1.7, 30.7.3.1.8, 30.7.3.1.9). However, it includes frames discarded by the Distribution function of the Aggregator (30.7.1.1.25). This value is read-only.;

30.7.1.1.22 aAggMulticastFramesRxOK

ATTRIBUTE

APPROPRIATE SYNTAX:

Generalized nonresettable counter. This counter has a maximum increment rate of 16 000 counts per second for a single 10 Mb/s aggregation.

BEHAVIOUR DEFINED AS:

A count of the data frames received by this Aggregator, from the Aggregation Ports that are (or have been) members of the aggregation, that were addressed to an active group address other than the broadcast address. The count does not include frames that carry LACP or Marker PDUs (30.7.3.1.2, 30.7.3.1.3, 30.7.3.1.4), or frames discarded by the Collection function of the Aggregator (30.7.1.1.26). This value is read-only.;

30.7.1.1.23 aAggBroadcastFramesTxOK

ATTRIBUTE

APPROPRIATE SYNTAX:

Generalized nonresettable counter. This counter has a maximum increment rate of 16 000 counts per second for a single 10 Mb/s aggregation.

BEHAVIOUR DEFINED AS:

A count of the broadcast data frames transmitted by this Aggregator on all Aggregation Ports that are (or have been) members of the aggregation. The count does not include frames transmitted by the Aggregator that carry LACP or Marker PDUs (30.7.3.1.7, 30.7.3.1.8, 30.7.3.1.9). However, it includes frames discarded by the Distribution function of the Aggregator (30.7.1.1.25). This value is read-only.;

Copyright © 2000 IEEE. All rights reserved.

Authorized licensed use limited to: N.C. State University Libraries - Acquisitions & Discovery S. Downloaded on November 14,2023 at 14:15:01 UTC from IEEE Xplore. Restrictions apply.

Cisco v. Corrigent - IPR2023-00447
Patent Owner Corrigent Exhibit 2012-0029

30.7.1.1.24 aAggBroadcastFramesRxOK

ATTRIBUTE

APPROPRIATE SYNTAX:

Generalized nonresettable counter. This counter has a maximum increment rate of 16 000 counts per second for a single 10 Mb/s aggregation.

BEHAVIOUR DEFINED AS:

A count of the broadcast data frames received by this Aggregator, from the Aggregation Ports that are (or have been) members of the aggregation. The count does not include frames that carry LACP or Marker PDUs (30.7.3.1.2, 30.7.3.1.3, 30.7.3.1.4), illegal or unknown protocol frames (30.7.3.1.5, 30.7.3.1.6), or frames discarded by the Collection function of the Aggregator (30.7.1.1.26). This value is read-only.;

30.7.1.1.25 aAggFramesDiscardedOnTx

ATTRIBUTE

APPROPRIATE SYNTAX:

Generalized nonresettable counter. This counter has a maximum increment rate of 16 000 counts per second for a single 10 Mb/s aggregation.

BEHAVIOUR DEFINED AS:

A count of data frames requested to be transmitted by this Aggregator that were discarded by the Distribution function of the Aggregator when conversations are re-allocated to different ports, due to the requirement to ensure that the conversations are flushed on the old ports in order to maintain proper frame ordering (43A.3), or discarded as a result of excessive collisions by ports that are (or have been) members of the aggregation. This value is read-only.;

30.7.1.1.26 aAggFramesDiscardedOnRx

ATTRIBUTE

APPROPRIATE SYNTAX:

Generalized nonresettable counter. This counter has a maximum increment rate of 16 000 counts per second for a single 10 Mb/s aggregation.

BEHAVIOUR DEFINED AS:

A count of data frames, received on all ports that are (or have been) members of the aggregation, that were discarded by the Collection function of the Aggregator as they were received on ports whose Collection function was disabled. This value is read-only.;

30.7.1.1.27 aAggFramesWithTxErrors

ATTRIBUTE

Copyright © 2000 IEEE. All rights reserved.
Authorized licensed use limited to: N.C. State University Libraries - Acquisitions & Discovery S. Downloaded on November 14,2023 at 14:15:01 UTC from IEEE Xplore. Restrictions apply.
Cisco v. Corrigent - IPR2023-00447
Patent Owner Corrigent Exhibit 2012-0030

APPROPRIATE SYNTAX:

Generalized nonresettable counter. This counter has a maximum increment rate of 16 000 counts per second for a single 10 Mb/s aggregation.

BEHAVIOUR DEFINED AS:

A count of data frames requested to be transmitted by this Aggregator that experienced transmission errors on ports that are (or have been) members of the aggregation. This count does not include frames discarded due to excess collisions. This value is read-only.;

30.7.1.1.28 aAggFramesWithRxErrors

ATTRIBUTE

APPROPRIATE SYNTAX:

Generalized nonresettable counter. This counter has a maximum increment rate of 16 000 counts per second for a single 10 Mb/s aggregation.

BEHAVIOUR DEFINED AS:

A count of data frames discarded on reception by all ports that are (or have been) members of the aggregation, or that were discarded by the Collection function of the Aggregator, or that were discarded by the Aggregator due to the detection of an illegal Slow Protocols PDU (30.7.3.1.6). This value is read-only.;

30.7.1.1.29 aAggUnknownProtocolFrames

ATTRIBUTE

APPROPRIATE SYNTAX:

Generalized nonresettable counter. This counter has a maximum increment rate of 16 000 counts per second for a single 10 Mb/s aggregation.

BEHAVIOUR DEFINED AS:

A count of data frames discarded on reception by all ports that are (or have been) members of the aggregation, due to the detection of an unknown Slow Protocols PDU (30.7.3.1.5). This value is read-only.;

30.7.1.1.30 aAggLinkUpDownNotificationEnable

ATTRIBUTE

APPROPRIATE SYNTAX:

An ENUMERATED VALUE that has one of the following entries:
enabled
disabled

BEHAVIOUR DEFINED AS:

When set to “enabled,” Link Up and Link Down notifications are enabled for this Aggregator. When set to “disabled,” Link Up and Link Down notifications are disabled for this Aggregator. This value is read-write.;

Copyright © 2000 IEEE. All rights reserved.

Authorized licensed use limited to: N.C. State University Libraries - Acquisitions & Discovery S. Downloaded on November 14,2023 at 14:15:01 UTC from IEEE Xplore. Restrictions apply.

Cisco v. Corrigent - IPR2023-00447
Patent Owner Corrigent Exhibit 2012-0031

30.7.1.1.31 aAggPortList

ATTRIBUTE

APPROPRIATE SYNTAX:

A SEQUENCE OF INTEGERs that match the syntax of aAggPortID.

BEHAVIOUR DEFINED AS:

The value of this read-only attribute contains the list of Aggregation Ports that are currently attached to the Aggregator. An empty list indicates that there are no Aggregation Ports attached. Each integer value in the list carries an aAggPortID attribute value (30.7.2.1.1).;

30.7.1.1.32 aAggCollectorMaxDelay

ATTRIBUTE

APPROPRIATE SYNTAX:

INTEGER

BEHAVIOUR DEFINED AS:

The value of this 16-bit read-write attribute defines the maximum delay, in tens of microseconds, that may be imposed by the Frame Collector between receiving a frame from an Aggregator Parser, and either delivering the frame to its MAC Client or discarding the frame (see 43.2.3.1.1).;

30.7.1.2 Aggregator Notifications

30.7.1.2.1 nAggLinkUpNotification

NOTIFICATION

APPROPRIATE SYNTAX:

INTEGER

BEHAVIOUR DEFINED AS:

When aAggLinkUpDownNotificationEnable is set to “enabled,” a Link Up notification is generated when the Operational State of the aggregator changes from “down” to “up.” When aAggLinkUpDownNotificationEnable is set to “disabled,” no Link Up notifications are generated. The notification carries the identifier of the Aggregator whose state has changed.;

30.7.1.2.2 nAggLinkDownNotification

NOTIFICATION

APPROPRIATE SYNTAX:

INTEGER

Copyright © 2000 IEEE. All rights reserved.
Authorized licensed use limited to: N.C. State University Libraries - Acquisitions & Discovery S. Downloaded on November 14,2023 at 14:15:01 UTC from IEEE Xplore. Restrictions apply.
Cisco v. Corrigent - IPR2023-00447
Patent Owner Corrigent Exhibit 2012-0032

BEHAVIOUR DEFINED AS:

When aAggLinkUpDownNotificationEnable is set to “enabled,” a Link Down notification is generated when the Operational State of the aggregator changes from “up” to “down.” When aAggLinkUpDownNotificationEnable is set to “disabled,” no Link Down notifications are generated. The notification carries the identifier of the Aggregator whose state has changed.;

30.7.2 Aggregation Port managed object class

This subclause formally defines the behaviors for the oAggregationPort managed object class attributes.

30.7.2.1 Aggregation Port Attributes

30.7.2.1.1 aAggPortID

ATTRIBUTE

APPROPRIATE SYNTAX:

INTEGER

BEHAVIOUR DEFINED AS:

The unique identifier allocated to this Aggregation Port by the local System. This attribute identifies an Aggregation Port instance among the subordinate managed objects of the containing object. This value is read-only.

NOTE—The aAggPortID is represented in the SNMP MIB as an ifIndex—see 30C.4.4.;

30.7.2.1.2 aAggPortActorSystemPriority

ATTRIBUTE

APPROPRIATE SYNTAX:

INTEGER

BEHAVIOUR DEFINED AS:

A 2-octet read-write value used to define the priority value associated with the Actor’s System ID.;

30.7.2.1.3 aAggPortActorSystemID

ATTRIBUTE

APPROPRIATE SYNTAX:

MACAddress

BEHAVIOUR DEFINED AS:

A 6-octet read-only MAC address value that defines the value of the System ID for the System that contains this Aggregation Port.;

Copyright © 2000 IEEE. All rights reserved.

Authorized licensed use limited to: N.C. State University Libraries - Acquisitions & Discovery S. Downloaded on November 14,2023 at 14:15:01 UTC from IEEE Xplore. Restrictions apply.

Cisco v. Corrigent - IPR2023-00447
Patent Owner Corrigent Exhibit 2012-0033

30.7.2.1.4 aAggPortActorAdminKey

ATTRIBUTE

APPROPRIATE SYNTAX:

INTEGER

BEHAVIOUR DEFINED AS:

The current administrative value of the Key for the Aggregation Port. This is a 16-bit read-write value. The meaning of particular Key values is of local significance.;

30.7.2.1.5 aAggPortActorOperKey

ATTRIBUTE

APPROPRIATE SYNTAX:

INTEGER

BEHAVIOUR DEFINED AS:

The current operational value of the Key for the Aggregation Port. This is a 16-bit read-only value. The meaning of particular Key values is of local significance.;

30.7.2.1.6 aAggPortPartnerAdminSystemPriority

ATTRIBUTE

APPROPRIATE SYNTAX:

INTEGER

BEHAVIOUR DEFINED AS:

A 2-octet read-write value used to define the administrative value of priority associated with the Partner's System ID. The assigned value is used, along with the value of aAggPortPartnerAdminSystemID, aAggPortPartnerAdminKey, aAggPortPartnerAdminPort, and aAggPortPartnerAdminPortPriority, in order to achieve manually configured aggregation.;

30.7.2.1.7 aAggPortPartnerOperSystemPriority

ATTRIBUTE

APPROPRIATE SYNTAX:

INTEGER

BEHAVIOUR DEFINED AS:

A 2-octet read-only value indicating the operational value of priority associated with the Partner's System ID. The value of this attribute may contain the manually configured value carried in aAggPortPartnerAdminSystemPriority if there is no protocol Partner.;

Copyright © 2000 IEEE. All rights reserved.
Authorized licensed use limited to: N.C. State University Libraries - Acquisitions & Discovery S. Downloaded on November 14,2023 at 14:15:01 UTC from IEEE Xplore. Restrictions apply.
Cisco v. Corrigent - IPR2023-00447
Patent Owner Corrigent Exhibit 2012-0034

30.7.2.1.8 aAggPortPartnerAdminSystemID

ATTRIBUTE

APPROPRIATE SYNTAX:

MACAddress

BEHAVIOUR DEFINED AS:

A 6-octet read-write MACAddress value representing the administrative value of the Aggregation Port's protocol Partner's System ID. The assigned value is used, along with the value of aAggPortPartnerAdminSystemPriority, aAggPortPartnerAdminKey, aAggPortPartnerAdminPort, and aAggPortPartnerAdminPortPriority, in order to achieve manually configured aggregation.;

30.7.2.1.9 aAggPortPartnerOperSystemID

ATTRIBUTE

APPROPRIATE SYNTAX:

MACAddress

BEHAVIOUR DEFINED AS:

A 6-octet read-only MACAddress value representing the current value of the Aggregation Port's protocol Partner's System ID. A value of zero indicates that there is no known protocol Partner. The value of this attribute may contain the manually configured value carried in aAggPortPartnerAdminSystemID if there is no protocol Partner.;

30.7.2.1.10 aAggPortPartnerAdminKey

ATTRIBUTE

APPROPRIATE SYNTAX:

INTEGER

BEHAVIOUR DEFINED AS:

The current administrative value of the Key for the protocol Partner. This is a 16-bit read-write value. The assigned value is used, along with the value of aAggPortPartnerAdminSystemPriority, aAggPortPartnerAdminSystemID, aAggPortPartnerAdminPort, and aAggPortPartnerAdminPortPriority, in order to achieve manually configured aggregation.;

30.7.2.1.11 aAggPortPartnerOperKey

ATTRIBUTE

APPROPRIATE SYNTAX:

INTEGER

Copyright © 2000 IEEE. All rights reserved.

Authorized licensed use limited to: N.C. State University Libraries - Acquisitions & Discovery S. Downloaded on November 14,2023 at 14:15:01 UTC from IEEE Xplore. Restrictions apply.

Cisco v. Corrigent - IPR2023-00447
Patent Owner Corrigent Exhibit 2012-0035

BEHAVIOUR DEFINED AS:

The current operational value of the Key for the protocol Partner. The value of this attribute may contain the manually configured value carried in aAggPortPartnerAdminKey if there is no protocol Partner. This is a 16-bit read-only value.;

30.7.2.1.12 aAggPortSelectedAggID

ATTRIBUTE

APPROPRIATE SYNTAX:

INTEGER

BEHAVIOUR DEFINED AS:

The identifier value of the Aggregator that this Aggregation Port has currently selected. Zero indicates that the Aggregation Port has not selected an Aggregator, either because it is in the process of detaching from an Aggregator or because there is no suitable Aggregator available for it to select. This value is read-only.;

30.7.2.1.13 aAggPortAttachedAggID

ATTRIBUTE

APPROPRIATE SYNTAX:

INTEGER

BEHAVIOUR DEFINED AS:

The identifier value of the Aggregator that this Aggregation Port is currently attached to. Zero indicates that the Aggregation Port is not currently attached to an Aggregator. This value is read-only.;

30.7.2.1.14 aAggPortActorPort

ATTRIBUTE

APPROPRIATE SYNTAX:

INTEGER

BEHAVIOUR DEFINED AS:

The port number locally assigned to the Aggregation Port. The port number is communicated in LACPDUs as the Actor_Port. This value is read-only.;

30.7.2.1.15 aAggPortActorPortPriority

ATTRIBUTE

Copyright © 2000 IEEE. All rights reserved.
Authorized licensed use limited to: N.C. State University Libraries - Acquisitions & Discovery S. Downloaded on November 14,2023 at 14:15:01 UTC from IEEE Xplore. Restrictions apply.
Cisco v. Corrigent - IPR2023-00447
Patent Owner Corrigent Exhibit 2012-0036

APPROPRIATE SYNTAX:

INTEGER

BEHAVIOUR DEFINED AS:

The priority value assigned to this Aggregation Port. This 16-bit value is read-write.;

30.7.2.1.16 aAggPortPartnerAdminPort

ATTRIBUTE

APPROPRIATE SYNTAX:

INTEGER

BEHAVIOUR DEFINED AS:

The current administrative value of the port number for the protocol Partner. This is a 16-bit read-write value. The assigned value is used, along with the value of aAggPortPartnerAdminSystemPriority, aAggPortPartnerAdminSystemID, aAggPortPartnerAdminKey, and aAggPortPartnerAdminPortPriority, in order to achieve manually configured aggregation.;

30.7.2.1.17 aAggPortPartnerOperPort

ATTRIBUTE

APPROPRIATE SYNTAX:

INTEGER

BEHAVIOUR DEFINED AS:

The operational port number assigned to this Aggregation Port by the Aggregation Port's protocol Partner. The value of this attribute may contain the manually configured value carried in aAggPortPartnerAdminPort if there is no protocol Partner. This 16-bit value is read-only.;

30.7.2.1.18 aAggPortPartnerAdminPortPriority

ATTRIBUTE

APPROPRIATE SYNTAX:

INTEGER

BEHAVIOUR DEFINED AS:

The current administrative value of the port priority for the protocol Partner. This is a 16-bit read-write value. The assigned value is used, along with the value of aAggPortPartnerAdminSystemPriority, aAggPortPartnerAdminSystemID, aAggPortPartnerAdminKey, and aAggPortPartnerAdminPort, in order to achieve manually configured aggregation.;

Copyright © 2000 IEEE. All rights reserved.

Authorized licensed use limited to: N.C. State University Libraries - Acquisitions & Discovery S. Downloaded on November 14,2023 at 14:15:01 UTC from IEEE Xplore. Restrictions apply.

Cisco v. Corrigent - IPR2023-00447
Patent Owner Corrigent Exhibit 2012-0037

30.7.2.1.19 aAggPortPartnerOperPortPriority

ATTRIBUTE

APPROPRIATE SYNTAX:

INTEGER

BEHAVIOUR DEFINED AS:

The priority value assigned to this Aggregation Port by the Partner. The value of this attribute may contain the manually configured value carried in aAggPortPartnerAdminPortPriority if there is no protocol Partner. This 16-bit value is read-only.;

30.7.2.1.20 aAggPortActorAdminState

ATTRIBUTE

APPROPRIATE SYNTAX:

BIT STRING [SIZE (1..8)]

BEHAVIOUR DEFINED AS:

A string of 8 bits, corresponding to the administrative values of Actor_State (43.4.2) as transmitted by the Actor in LACPDUs. The first bit corresponds to bit 0 of Actor_State (LACP_Activity), the second bit corresponds to bit 1 (LACP_Timeout), the third bit corresponds to bit 2 (Aggregation), the fourth bit corresponds to bit 3 (Synchronization), the fifth bit corresponds to bit 4 (Collecting), the sixth bit corresponds to bit 5 (Distributing), the seventh bit corresponds to bit 6 (Defaulted), and the eighth bit corresponds to bit 7 (Expired). These values allow administrative control over the values of LACP_Activity, LACP_Timeout, and Aggregation. This attribute value is read-write.;

30.7.2.1.21 aAggPortActorOperState

ATTRIBUTE

APPROPRIATE SYNTAX:

BIT STRING [SIZE (1..8)]

BEHAVIOUR DEFINED AS:

A string of 8 bits, corresponding to the current operational values of Actor_State (43.4.2) as transmitted by the Actor in LACPDUs. The bit allocations are as defined in 30.7.2.1.20. This attribute value is read-only.;

30.7.2.1.22 aAggPortPartnerAdminState

ATTRIBUTE

APPROPRIATE SYNTAX:

BIT STRING [SIZE (1..8)]

Copyright © 2000 IEEE. All rights reserved.
Authorized licensed use limited to: N.C. State University Libraries - Acquisitions & Discovery S. Downloaded on November 14,2023 at 14:15:01 UTC from IEEE Xplore. Restrictions apply.
Cisco v. Corrigent - IPR2023-00447
Patent Owner Corrigent Exhibit 2012-0038

BEHAVIOUR DEFINED AS:

A string of 8 bits, corresponding to the current administrative value of Actor_State for the protocol Partner. The bit allocations are as defined in 30.7.2.1.20. This attribute value is read-write. The assigned value is used in order to achieve manually configured aggregation.;

30.7.2.1.23 aAggPortPartnerOperState

ATTRIBUTE

APPROPRIATE SYNTAX:

BIT STRING [SIZE (1..8)]

BEHAVIOUR DEFINED AS:

A string of 8 bits, corresponding to the current values of Actor_State in the most recently received LACPDU transmitted by the protocol Partner. The bit allocations are as defined in 30.7.2.1.20. In the absence of an active protocol Partner, this value may reflect the manually configured value aAggPortPartnerAdminState. This attribute value is read-only.;

30.7.2.1.24 aAggPortAggregateOrIndividual

ATTRIBUTE

APPROPRIATE SYNTAX:

BOOLEAN

BEHAVIOUR DEFINED AS:

A read-only Boolean value indicating whether the Aggregation Port is able to Aggregate (“TRUE”) or is only able to operate as an Individual link (“FALSE”).;

30.7.3 Aggregation Port Statistics managed object class

This subclause formally defines the behaviors for the oAggPortStats managed object class attributes.

30.7.3.1 Aggregation Port Statistics attributes

30.7.3.1.1 aAggPortStatsID

ATTRIBUTE

APPROPRIATE SYNTAX:

INTEGER

BEHAVIOUR DEFINED AS:

This read-only attribute identifies an Aggregation Port Statistics object instance among the subordinate managed objects of the containing object. The value allocated to this attribute shall be the same as the containing oAggregationPort managed object.;

Copyright © 2000 IEEE. All rights reserved.

Authorized licensed use limited to: N.C. State University Libraries - Acquisitions & Discovery S. Downloaded on November 14,2023 at 14:15:01 UTC from IEEE Xplore. Restrictions apply.

Cisco v. Corrigent - IPR2023-00447
Patent Owner Corrigent Exhibit 2012-0039

30.7.3.1.2 aAggPortStatsLACPDUsRx

ATTRIBUTE

APPROPRIATE SYNTAX:

Generalized nonresettable counter. This counter has a maximum increment rate of 5 counts per second.

BEHAVIOUR DEFINED AS:

The number of valid LACPDUs received on this Aggregation Port. This value is read-only.;

30.7.3.1.3 aAggPortStatsMarkerPDUsRx

ATTRIBUTE

APPROPRIATE SYNTAX:

Generalized nonresettable counter. This counter has a maximum increment rate of 5 counts per second.

BEHAVIOUR DEFINED AS:

The number of valid Marker PDUs received on this Aggregation Port. This value is read-only.;

30.7.3.1.4 aAggPortStatsMarkerResponsePDUsRx

ATTRIBUTE

APPROPRIATE SYNTAX:

Generalized nonresettable counter. This counter has a maximum increment rate of 5 counts per second.

BEHAVIOUR DEFINED AS:

The number of valid Marker Response PDUs received on this Aggregation Port. This value is read-only.;

30.7.3.1.5 aAggPortStatsUnknownRx

ATTRIBUTE

APPROPRIATE SYNTAX:

Generalized nonresettable counter. This counter has a maximum increment rate of 50 counts per second.

BEHAVIOUR DEFINED AS:

The number of frames received that either

— Carry the Slow Protocols Ethernet Type value (43B.4), but contain an unknown PDU, or

Copyright © 2000 IEEE. All rights reserved.
Authorized licensed use limited to: N.C. State University Libraries - Acquisitions & Discovery S. Downloaded on November 14,2023 at 14:15:01 UTC from IEEE Xplore. Restrictions apply.
Cisco v. Corrigent - IPR2023-00447
Patent Owner Corrigent Exhibit 2012-0040

— Are addressed to the Slow Protocols group MAC Address (43B.3), but do not carry the Slow Protocols Ethernet Type. This value is read-only.;

30.7.3.1.6 aAggPortStatsIllegalRx

ATTRIBUTE

APPROPRIATE SYNTAX:

Generalized nonresettable counter. This counter has a maximum increment rate of 50 counts per second.

BEHAVIOUR DEFINED AS:

The number of frames received that carry the Slow Protocols Ethernet Type value (43B.4), but contain a badly formed PDU or an illegal value of Protocol Subtype (43B.4). This value is read-only.;

30.7.3.1.7 aAggPortStatsLACPDUsTx

ATTRIBUTE

APPROPRIATE SYNTAX:

Generalized nonresettable counter. This counter has a maximum increment rate of 5 counts per second.

BEHAVIOUR DEFINED AS:

The number of LACPDUs transmitted on this Aggregation Port. This value is read-only.;

30.7.3.1.8 aAggPortStatsMarkerPDUsTx

ATTRIBUTE

APPROPRIATE SYNTAX:

Generalized nonresettable counter. This counter has a maximum increment rate of 5 counts per second.

BEHAVIOUR DEFINED AS:

The number of Marker PDUs transmitted on this Aggregation Port. This value is read-only.;

30.7.3.1.9 aAggPortStatsMarkerResponsePDUsTx

ATTRIBUTE

APPROPRIATE SYNTAX:

Generalized nonresettable counter. This counter has a maximum increment rate of 5 counts per second.

Copyright © 2000 IEEE. All rights reserved.

Authorized licensed use limited to: N.C. State University Libraries - Acquisitions & Discovery S. Downloaded on November 14,2023 at 14:15:01 UTC from IEEE Xplore. Restrictions apply.

Cisco v. Corrigent - IPR2023-00447
Patent Owner Corrigent Exhibit 2012-0041

BEHAVIOUR DEFINED AS:

The number of Marker Response PDUs transmitted on this Aggregation Port. This value is read-only.;

30.7.4 Aggregation Port Debug Information managed object class

This subclause formally defines the behaviors for the oAggPortDebugInformation managed object class attributes.

30.7.4.1 Aggregation Port Debug Information attributes

30.7.4.1.1 aAggPortDebugInformationID

ATTRIBUTE

APPROPRIATE SYNTAX:

INTEGER

BEHAVIOUR DEFINED AS:

This read-only attribute identifies an LACP Debug Information object instance among the subordinate managed objects of the containing object. The value allocated to this attribute shall be the same as the containing oAggregationPort managed object.;

30.7.4.1.2 aAggPortDebugRxState

ATTRIBUTE

APPROPRIATE SYNTAX:

An ENUMERATED VALUE that has one of the following entries:

current
expired
defaulted
initialize
lacpDisabled
portDisabled

BEHAVIOUR DEFINED AS:

This attribute holds the value “current” if the Receive state machine for the Aggregation Port is in the CURRENT state, “expired” if the Receive state machine is in the EXPIRED state, “defaulted” if the Receive state machine is in the DEFAULTED state, “initialize” if the Receive state machine is in the INITIALIZE state, “lacpDisabled” if the Receive state machine is in the LACP_DISABLED state, or “portDisabled” if the Receive state machine is in the PORT_DISABLED state. This value is read-only.;

Copyright © 2000 IEEE. All rights reserved.
Authorized licensed use limited to: N.C. State University Libraries - Acquisitions & Discovery S. Downloaded on November 14,2023 at 14:15:01 UTC from IEEE Xplore. Restrictions apply.
Cisco v. Corrigent - IPR2023-00447
Patent Owner Corrigent Exhibit 2012-0042

30.7.4.1.3 aAggPortDebugLastRxTime

ATTRIBUTE

APPROPRIATE SYNTAX:

INTEGER

BEHAVIOUR DEFINED AS:

The value of aTimeSinceSystemReset (F.2.1) when the last LACPDU was received by this Aggregation Port. This value is read-only.;

30.7.4.1.4 aAggPortDebugMuxState

ATTRIBUTE

APPROPRIATE SYNTAX:

An ENUMERATED VALUE that has one of the following entries:

detached
waiting
attached
collecting
distributing
collecting_distributing

BEHAVIOUR DEFINED AS:

This attribute holds the value “detached” if the Mux state machine (43.4.15) for the Aggregation Port is in the DETACHED state, “waiting” if the Mux state machine for the Aggregation Port is in the WAITING state, “attached” if the Mux state machine for the Aggregation Port is in the ATTACHED state, “collecting” if the Mux state machine for the Aggregation Port is in the COLLECTING state, “distributing” if the Mux state machine for the Aggregation Port is in the DISTRIBUTING state, and “collecting_distributing” if the Mux state machine for the Aggregation Port is in the COLLECTING_DISTRIBUTING state. This value is read-only.;

30.7.4.1.5 aAggPortDebugMuxReason

ATTRIBUTE

APPROPRIATE SYNTAX:

A PrintableString, 255 characters max.

BEHAVIOUR DEFINED AS:

A human-readable text string indicating the reason for the most recent change of Mux machine state. This value is read-only.;

Copyright © 2000 IEEE. All rights reserved.

Authorized licensed use limited to: N.C. State University Libraries - Acquisitions & Discovery S. Downloaded on November 14,2023 at 14:15:01 UTC from IEEE Xplore. Restrictions apply.

Cisco v. Corrigent - IPR2023-00447
Patent Owner Corrigent Exhibit 2012-0043

30.7.4.1.6 aAggPortDebugActorChurnState

ATTRIBUTE

APPROPRIATE SYNTAX:

An ENUMERATED VALUE that has one of the following entries:

noChurn
churn

BEHAVIOUR DEFINED AS:

The state of the Actor Churn Detection machine (43.4.17) for the Aggregation Port. A value of "noChurn" indicates that the state machine is in either the NO_ACTOR_CHURN or the ACTOR_CHURN_MONITOR state, and "churn" indicates that the state machine is in the ACTOR_CHURN state. This value is read-only.;

30.7.4.1.7 aAggPortDebugPartnerChurnState

ATTRIBUTE

APPROPRIATE SYNTAX:

An ENUMERATED VALUE that has one of the following entries:

noChurn
churn

BEHAVIOUR DEFINED AS:

The state of the Partner Churn Detection machine (43.4.17) for the Aggregation Port. A value of "noChurn" indicates that the state machine is in either the NO_PARTNER_CHURN or the PARTNER_CHURN_MONITOR state, and "churn" indicates that the state machine is in the PARTNER_CHURN state. This value is read-only.;

30.7.4.1.8 aAggPortDebugActorChurnCount

ATTRIBUTE

APPROPRIATE SYNTAX:

Generalized nonresettable counter. This counter has a maximum increment rate of 5 counts per second.

BEHAVIOUR DEFINED AS:

Count of the number of times the Actor Churn state machine has entered the ACTOR_CHURN state. This value is read-only.;

Copyright © 2000 IEEE. All rights reserved.
Authorized licensed use limited to: N.C. State University Libraries - Acquisitions & Discovery S. Downloaded on November 14,2023 at 14:15:01 UTC from IEEE Xplore. Restrictions apply.
Cisco v. Corrigent - IPR2023-00447
Patent Owner Corrigent Exhibit 2012-0044

30.7.4.1.9 aAggPortDebugPartnerChurnCount

ATTRIBUTE

APPROPRIATE SYNTAX:

Generalized nonresettable counter. This counter has a maximum increment rate of 5 counts per second.

BEHAVIOUR DEFINED AS:

Count of the number of times the Partner Churn state machine has entered the PARTNER_CHURN state. This value is read-only.;

30.7.4.1.10 aAggPortDebugActorSyncTransitionCount

ATTRIBUTE

APPROPRIATE SYNTAX:

Generalized nonresettable counter. This counter has a maximum increment rate of 5 counts per second.

BEHAVIOUR DEFINED AS:

Count of the number of times the Actor's Mux state machine (43.4.15) has entered the IN_SYNC state. This value is read-only.;

30.7.4.1.11 aAggPortDebugPartnerSyncTransitionCount

ATTRIBUTE

APPROPRIATE SYNTAX:

Generalized nonresettable counter. This counter has a maximum increment rate of 5 counts per second.

BEHAVIOUR DEFINED AS:

Count of the number of times the Partner's Mux state machine (43.4.15) has entered the IN_SYNC state. This value is read-only.;

30.7.4.1.12 aAggPortDebugActorChangeCount

ATTRIBUTE

APPROPRIATE SYNTAX:

Generalized nonresettable counter. This counter has a maximum increment rate of 5 counts per second.

BEHAVIOUR DEFINED AS:

Count of the number of times the Actor's perception of the LAG ID for this Aggregation Port has changed. This value is read-only.;

Copyright © 2000 IEEE. All rights reserved.

Authorized licensed use limited to: N.C. State University Libraries - Acquisitions & Discovery S. Downloaded on November 14,2023 at 14:15:01 UTC from IEEE Xplore. Restrictions apply.

Cisco v. Corrigent - IPR2023-00447
Patent Owner Corrigent Exhibit 2012-0045

30.7.4.1.13 aAggPortDebugPartnerChangeCount

ATTRIBUTE

APPROPRIATE SYNTAX:

Generalized nonresettable counter. This counter has a maximum increment rate of 5 counts per second.

BEHAVIOUR DEFINED AS:

Count of the number of times the Partner's perception of the LAG ID (43.3.6.1) for this Aggregation Port has changed. This value is read-only.;

Copyright © 2000 IEEE. All rights reserved.
Authorized licensed use limited to: N.C. State University Libraries - Acquisitions & Discovery S. Downloaded on November 14,2023 at 14:15:01 UTC from IEEE Xplore. Restrictions apply.
Cisco v. Corrigent - IPR2023-00447
Patent Owner Corrigent Exhibit 2012-0046

Annex 30A

(normative)

GDMO specification for IEEE 802.3 managed object classes

30A.1.1 DTE MAC entity formal definition

Insert the following name binding definitions after the current definition nbMACName in 30.A.1.1:

nbMAC-MACControl NAME BINDING

SUBORDINATE OBJECT CLASS oMACEntity;
NAMED BY SUPERIOR OBJECT CLASS oMACControlEntity;
WITH ATTRIBUTE aMACID;
REGISTERED AS {iso(1) member-body(2) us(840) 802dot3(10006) csmacdmgt(30) nameBinding(6) nbMAC-MACControl(16)};

nbMAC-Aggregator NAME BINDING

SUBORDINATE OBJECT CLASS oMACEntity;
NAMED BY SUPERIOR OBJECT CLASS oAggregator;
WITH ATTRIBUTE aMACID;
REGISTERED AS {iso(1) member-body(2) us(840) 802dot3(10006) csmacdmgt(30) nameBinding(6) nbMAC-Aggregator(17)};

30A.3.1 DTE MAC control entity formal definition

Insert the following name binding definitions before the current definition nbMACControlMonitor in 30.A.3.1:

nbMACControl-System NAME BINDING

SUBORDINATE OBJECT CLASS oMACControlEntity;
NAMED BY SUPERIOR OBJECT CLASS “ISO/IEC 10165-2”:system;
WITH ATTRIBUTE aMACControlID;
REGISTERED AS {iso(1) member-body(2) us(840) 802dot3(10006) csmacdmgt(30) nameBinding(6) nbMACControl-System(18)};

nbMACControl-Aggregator NAME BINDING

SUBORDINATE OBJECT CLASS oMACControlEntity;
NAMED BY SUPERIOR OBJECT CLASS oAggregator;
WITH ATTRIBUTE aMACControlID;
REGISTERED AS {iso(1) member-body(2) us(840) 802dot3(10006) csmacdmgt(30) nameBinding(6) nbMACControl-Aggregator(19)};

Copyright © 2000 IEEE. All rights reserved.

Authorized licensed use limited to: N.C. State University Libraries - Acquisitions & Discovery S. Downloaded on November 14,2023 at 14:15:01 UTC from IEEE Xplore. Restrictions apply.

Cisco v. Corrigent - IPR2023-00447
Patent Owner Corrigent Exhibit 2012-0047

Insert the following new subclauses in sequence after 30.A.10:

30A.11 Aggregator managed object class

30A.11.1 Aggregator, formal definition

```
oAggregator                     MANAGED OBJECT CLASS

    DERIVED FROM                "CCITT Rec. X.721 (1992) | ISO/IEC 10165-2 : 1992":top;
    CHARACTERIZED BY
            pAggregatorBasic    PACKAGE
                    ATTRIBUTES  aAggID                                  GET;
            ;
    ;
    CONDITIONAL PACKAGES
            pAggregatorMandatory PACKAGE
                    ATTRIBUTES  aAggDescription                         GET,
                                aAggName                                GET-REPLACE,
                                aAggActorSystemID                       GET-REPLACE,
                                aAggActorSystemPriority                 GET-REPLACE,
                                aAggAggregateOrIndividual               GET,
                                aAggActorAdminKey                       GET-REPLACE,
                                aAggActorOperKey                        GET,
                                aAggMACAddress                          GET,
                                aAggPartnerSystemID                     GET,
                                aAggPartnerSystemPriority               GET,
                                aAggPartnerOperKey                      GET,
                                aAggAdminState                          GET-REPLACE,
                                aAggOperState                           GET,
                                aAggTimeOfLastOperChange                GET,
                                aAggDataRate                            GET,
                                aAggFramesTxOK                          GET,
                                aAggFramesRxOK                          GET,
                                aAggLinkUpDownNotificationEnable        GET-REPLACE,
                                aAggCollectorMaxDelay                   GET-REPLACE;
                    NOTIFICATIONS
                                nAggLinkUpNotification,
                                nAggLinkDownNotification;
                    REGISTERED AS
                                {iso(1) member-body(2) us(840) 802dot3(10006) csmacd-
                    mgt(30) package(4) pAggregatorMandatory(19)};
                    PRESENT IF  Conformance to Link Aggregation management is desired;
            pAggregatorRecommendedPACKAGE
                    ATTRIBUTES  aAggOctetsTxOK                          GET,
                                aAggOctetsRxOK                          GET,
                                aAggFramesDiscardedOnTx                 GET,
                                aAggFramesDiscardedOnRx                 GET,
                                aAggFramesWithTxErrors                  GET,
                                aAggFramesWithRxErrors                  GET,
                                aAggUnknownProtocolFrames               GET,
                                aAggPortList                            GET;
                    REGISTERED AS
```


Copyright © 2000 IEEE. All rights reserved.
Authorized licensed use limited to: N.C. State University Libraries - Acquisitions & Discovery S. Downloaded on November 14,2023 at 14:15:01 UTC from IEEE Xplore. Restrictions apply.
Cisco v. Corrigent - IPR2023-00447
Patent Owner Corrigent Exhibit 2012-0048

{iso(1) member-body(2) us(840) 802dot3(10006) csmacd-mgt(30) package(4) pAggregatorRecommended(20)};
PRESENT IF The recommended package is implemented;
pAggregatorOptional PACKAGE
ATTRIBUTES aAggMulticastFramesTxOK GET,
aAggMulticastFramesRxOK GET,
aAggBroadcastFramesTxOK GET,
aAggBroadcastFramesRxOK GET;
REGISTERED AS
{iso(1) member-body(2) us(840) 802dot3(10006) csmacd-mgt(30) package(4) pAggregatorOptional(21)};
PRESENT IF The optional package is implemented;
;
REGISTERED AS {iso(1) member-body(2) us(840) 802dot3(10006) csmacdmgt(30) managedObjectClass(3) oAggregator(10)};

nbAggregatorName NAME BINDING

SUBORDINATE OBJECT CLASS oAggregator;
NAMED BY SUPERIOR OBJECT CLASS "ISO/IEC 10165-2":system;
WITH ATTRIBUTE aAggID
REGISTERED AS {iso(1) member-body(2) us(840) 802dot3(10006) csmacdmgt(30) nameBinding(6) nbAggregatorName(20)};

30A.11.2 Aggregator attributes

aAggID ATTRIBUTE

WITH ATTRIBUTE SYNTAX IEEE802Dot3-MgmtAttributeModule.AggID;
MATCHES FOR EQUALITY;
BEHAVIOUR bAggID;
REGISTERED AS {iso(1) member-body(2) us(840) 802dot3(10006) csmacdmgt(30) attribute(7) aAggID(101)};

bAggID BEHAVIOUR

DEFINED AS See "BEHAVIOUR DEFINED AS" in 30.7.1.1.1;

aAggDescription ATTRIBUTE

WITH ATTRIBUTE SYNTAX IEEE802Dot3-MgmtAttributeModule.DescriptionString;
MATCHES FOR EQUALITY;
BEHAVIOUR bAggDescription;
REGISTERED AS {iso(1) member-body(2) us(840) 802dot3(10006) csmacdmgt(30) attribute(7) aAggDescription(102)};

bAggDescription BEHAVIOUR

DEFINED AS See "BEHAVIOUR DEFINED AS" in 30.7.1.1.2;

Copyright © 2000 IEEE. All rights reserved.

Authorized licensed use limited to: N.C. State University Libraries - Acquisitions & Discovery S. Downloaded on November 14,2023 at 14:15:01 UTC from IEEE Xplore. Restrictions apply.

Cisco v. Corrigent - IPR2023-00447
Patent Owner Corrigent Exhibit 2012-0049

aAggName **ATTRIBUTE**

WITH ATTRIBUTE SYNTAX IEEE802Dot3-MgmtAttributeModule.DescriptionString;
MATCHES FOR EQUALITY;
BEHAVIOUR bAggName;
REGISTERED AS {iso(1) member-body(2) us(840) 802dot3(10006) csmacdmgt(30) attribute(7) aAggName(103)};

bAggName **BEHAVIOUR**

DEFINED AS See “BEHAVIOUR DEFINED AS” in 30.7.1.1.3;

aAggActorSystemID **ATTRIBUTE**

WITH ATTRIBUTE SYNTAX IEEE802Dot3-MgmtAttributeModule.MACAddress;
MATCHES FOR EQUALITY, ORDERING;
BEHAVIOUR bAggActorSystemID;
REGISTERED AS {iso(1) member-body(2) us(840) 802dot3(10006) csmacdmgt(30) attribute(7) aAggActorSystemID(104)};

bAggActorSystemID **BEHAVIOUR**

DEFINED AS See “BEHAVIOUR DEFINED AS” in 30.7.1.1.4;

aAggActorSystemPriority **ATTRIBUTE**

WITH ATTRIBUTE SYNTAX IEEE802Dot3-MgmtAttributeModule.PriorityValue;
MATCHES FOR EQUALITY, ORDERING;
BEHAVIOUR bAggActorSystemPriority;
REGISTERED AS {iso(1) member-body(2) us(840) 802dot3(10006) csmacdmgt(30) attribute(7) aAggActorSystemPriority(105)};

bAggActorSystemPriority **BEHAVIOUR**

DEFINED AS See “BEHAVIOUR DEFINED AS” in 30.7.1.1.5;

aAggAggregateOrIndividual **ATTRIBUTE**

WITH ATTRIBUTE SYNTAX IEEE802Dot3-MgmtAttributeModule.AggOrInd;
MATCHES FOR EQUALITY;
BEHAVIOUR bAggAggregateOrIndividual;
REGISTERED AS {iso(1) member-body(2) us(840) 802dot3(10006) csmacdmgt(30) attribute(7) aAggAggregateOrIndividual(106)};

bAggAggregateOrIndividual **BEHAVIOUR**

DEFINED AS See “BEHAVIOUR DEFINED AS” in 30.7.1.1.6;

aAggActorAdminKey **ATTRIBUTE**

WITH ATTRIBUTE SYNTAX IEEE802Dot3-MgmtAttributeModule.KeyValue;
MATCHES FOR EQUALITY;
BEHAVIOUR bAggActorAdminKey;

Copyright © 2000 IEEE. All rights reserved.
Authorized licensed use limited to: N.C. State University Libraries - Acquisitions & Discovery S. Downloaded on November 14,2023 at 14:15:01 UTC from IEEE Xplore. Restrictions apply.
Cisco v. Corrigent - IPR2023-00447
Patent Owner Corrigent Exhibit 2012-0050

REGISTERED AS {iso(1) member-body(2) us(840) 802dot3(10006) csmacdmgt(30) attribute(7) aAggActorAdminKey(107)};

bAggActorAdminKey BEHAVIOUR

DEFINED AS See "BEHAVIOUR DEFINED AS" in 30.7.1.1.7;

aAggActorOperKey ATTRIBUTE

WITH ATTRIBUTE SYNTAX IEEE802Dot3-MgmtAttributeModule.KeyValue;
MATCHES FOR EQUALITY;
BEHAVIOUR bAggActorOperKey;
REGISTERED AS {iso(1) member-body(2) us(840) 802dot3(10006) csmacdmgt(30) attribute(7) aAggActorOperKey(108)};

bAggActorOperKey BEHAVIOUR

DEFINED AS See "BEHAVIOUR DEFINED AS" in 30.7.1.1.8;

aAggMACAddress ATTRIBUTE

WITH ATTRIBUTE SYNTAX IEEE802Dot3-MgmtAttributeModule.MACAddress;
MATCHES FOR EQUALITY, ORDERING;
BEHAVIOUR bAggMACAddress;
REGISTERED AS {iso(1) member-body(2) us(840) 802dot3(10006) csmacdmgt(30) attribute(7) aAggMACAddress(109)};

bAggMACAddress BEHAVIOUR

DEFINED AS See "BEHAVIOUR DEFINED AS" in 30.7.1.1.9;

aAggPartnerSystemID ATTRIBUTE

WITH ATTRIBUTE SYNTAX IEEE802Dot3-MgmtAttributeModule.MACAddress;
MATCHES FOR EQUALITY, ORDERING;
BEHAVIOUR bAggPartnerSystemID;
REGISTERED AS {iso(1) member-body(2) us(840) 802dot3(10006) csmacdmgt(30) attribute(7) aAggPartnerSystemID(110)};

bAggPartnerSystemID BEHAVIOUR

DEFINED AS See "BEHAVIOUR DEFINED AS" in 30.7.1.1.10;

aAggPartnerSystemPriority ATTRIBUTE

WITH ATTRIBUTE SYNTAX IEEE802Dot3-MgmtAttributeModule.PriorityValue;
MATCHES FOR EQUALITY, ORDERING;
BEHAVIOUR bAggPartnerSystemPriority;
REGISTERED AS {iso(1) member-body(2) us(840) 802dot3(10006) csmacdmgt(30) attribute(7) aAggPartnerSystemPriority(111)};

bAggPartnerSystemPriority BEHAVIOUR

DEFINED AS See "BEHAVIOUR DEFINED AS" in 30.7.1.1.11;

Copyright © 2000 IEEE. All rights reserved.

Authorized licensed use limited to: N.C. State University Libraries - Acquisitions & Discovery S. Downloaded on November 14,2023 at 14:15:01 UTC from IEEE Xplore. Restrictions apply.

Cisco v. Corrigent - IPR2023-00447
Patent Owner Corrigent Exhibit 2012-0051

aAggPartnerOperKey **ATTRIBUTE**

WITH ATTRIBUTE SYNTAX IEEE802Dot3-MgmtAttributeModule.KeyValue;
MATCHES FOR EQUALITY;
BEHAVIOUR bAggPartnerOperKey;
REGISTERED AS {iso(1) member-body(2) us(840) 802dot3(10006) csmacdmgt(30) attribute(7) aAggPartnerOperKey(112)};

bAggPartnerOperKey **BEHAVIOUR**

DEFINED AS See “BEHAVIOUR DEFINED AS” in 30.7.1.1.12;

aAggAdminState **ATTRIBUTE**

WITH ATTRIBUTE SYNTAX IEEE802Dot3-MgmtAttributeModule.AggState;
MATCHES FOR EQUALITY;
BEHAVIOUR bAggAdminState;
REGISTERED AS {iso(1) member-body(2) us(840) 802dot3(10006) csmacdmgt(30) attribute(7) aAggAdminState(113)};

bAggAdminState **BEHAVIOUR**

DEFINED AS See “BEHAVIOUR DEFINED AS” in 30.7.1.1.13;

aAggOperState **ATTRIBUTE**

WITH ATTRIBUTE SYNTAX IEEE802Dot3-MgmtAttributeModule.AggState;
MATCHES FOR EQUALITY;
BEHAVIOUR bAggOperState ;
REGISTERED AS {iso(1) member-body(2) us(840) 802dot3(10006) csmacdmgt(30) attribute(7) aAggOperState(114)};

bAggOperState **BEHAVIOUR**

DEFINED AS See “BEHAVIOUR DEFINED AS” in 30.7.1.1.14;

aAggTimeOfLastOperChange **ATTRIBUTE**

WITH ATTRIBUTE SYNTAX IEEE802Dot3-MgmtAttributeModule.Integer32;
MATCHES FOR EQUALITY, ORDERING;
BEHAVIOUR bAggTimeOfLastOperChange;
REGISTERED AS {iso(1) member-body(2) us(840) 802dot3(10006) csmacdmgt(30) attribute(7) aAggTimeOfLastOperChange(115)};

bAggTimeOfLastOperChange **BEHAVIOUR**

DEFINED AS See “BEHAVIOUR DEFINED AS” in 30.7.1.1.15;

aAggDataRate **ATTRIBUTE**

WITH ATTRIBUTE SYNTAX IEEE802Dot3-MgmtAttributeModule.AggDataRate;
MATCHES FOR EQUALITY, ORDERING;
BEHAVIOUR bAggDataRate;

Copyright © 2000 IEEE. All rights reserved.
Authorized licensed use limited to: N.C. State University Libraries - Acquisitions & Discovery S. Downloaded on November 14,2023 at 14:15:01 UTC from IEEE Xplore. Restrictions apply.
Cisco v. Corrigent - IPR2023-00447
Patent Owner Corrigent Exhibit 2012-0052

REGISTERED AS {iso(1) member-body(2) us(840) 802dot3(10006) csmacdmgt(30) attribute(7) aAggDataRate(116)};

bAggDataRate **BEHAVIOUR**

DEFINED AS See "BEHAVIOUR DEFINED AS" in 30.7.1.1.16;

aAggOctetsTxOK **ATTRIBUTE**

DERIVED FROM aCMCounter;
MATCHES FOR EQUALITY, ORDERING;
BEHAVIOUR bAggOctetsTxOK;
REGISTERED AS {iso(1) member-body(2) us(840) 802dot3(10006) csmacdmgt(30) attribute(7) aAggOctetsTxOK(117)};

bAggOctetsTxOK **BEHAVIOUR**

DEFINED AS See "BEHAVIOUR DEFINED AS" in 30.7.1.1.17.

NOTE—This counter has a maximum increment rate of 1 230 000 counts per second at 10 Mb/s.;

aAggOctetsRxOK **ATTRIBUTE**

DERIVED FROM aCMCounter;
MATCHES FOR EQUALITY, ORDERING;
BEHAVIOUR bAggOctetsRxOK;
REGISTERED AS {iso(1) member-body(2) us(840) 802dot3(10006) csmacdmgt(30) attribute(7) aAggOctetsRxOK(118)};

bAggOctetsRxOK **BEHAVIOUR**

DEFINED AS See "BEHAVIOUR DEFINED AS" in 30.7.1.1.18.

NOTE—This counter has a maximum increment rate of 1 230 000 counts per second at 10 Mb/s.;

aAggFramesTxOK **ATTRIBUTE**

DERIVED FROM aCMCounter;
MATCHES FOR EQUALITY, ORDERING;
BEHAVIOUR bAggFramesTxOK;
REGISTERED AS {iso(1) member-body(2) us(840) 802dot3(10006) csmacdmgt(30) attribute(7) aAggFramesTxOK(119)};

bAggFramesTxOK **BEHAVIOUR**

DEFINED AS See "BEHAVIOUR DEFINED AS" in 30.7.1.1.19.

NOTE—This counter has a maximum increment rate of 16 000 counts per second at 10 Mb/s.;

aAggFramesRxOK **ATTRIBUTE**

DERIVED FROM aCMCounter;

Copyright © 2000 IEEE. All rights reserved.

Authorized licensed use limited to: N.C. State University Libraries - Acquisitions & Discovery S. Downloaded on November 14,2023 at 14:15:01 UTC from IEEE Xplore. Restrictions apply.
Cisco v. Corrigent - IPR2023-00447
Patent Owner Corrigent Exhibit 2012-0053

MATCHES FOR EQUALITY, ORDERING;
BEHAVIOUR bAggFramesRxOK;
REGISTERED AS {iso(1) member-body(2) us(840) 802dot3(10006) csmacdmgt(30) attribute(7) aAggFramesRxOK(120)};

bAggFramesRxOK BEHAVIOUR

DEFINED AS See "BEHAVIOUR DEFINED AS" in 30.7.1.1.20.

NOTE—This counter has a maximum increment rate of 16 000 counts per second at 10 Mb/s.;

aAggMulticastFramesTxOK ATTRIBUTE

DERIVED FROM aCMCounter;
MATCHES FOR EQUALITY, ORDERING;
BEHAVIOUR bAggMulticastFramesTxOK;
REGISTERED AS {iso(1) member-body(2) us(840) 802dot3(10006) csmacdmgt(30) attribute(7) aAggMulticastFramesTxOK(121)};

bAggMulticastFramesTxOK BEHAVIOUR

DEFINED AS See "BEHAVIOUR DEFINED AS" in 30.7.1.1.21.

NOTE—This counter has a maximum increment rate of 16 000 counts per second at 10 Mb/s.;

aAggMulticastFramesRxOK ATTRIBUTE

DERIVED FROM aCMCounter;
MATCHES FOR EQUALITY, ORDERING;
BEHAVIOUR bAggMulticastFramesRxOK;
REGISTERED AS {iso(1) member-body(2) us(840) 802dot3(10006) csmacdmgt(30) attribute(7) aAggMulticastFramesRxOK(122)};

bAggMulticastFramesRxOK BEHAVIOUR

DEFINED AS See "BEHAVIOUR DEFINED AS" in 30.7.1.1.22.

NOTE—This counter has a maximum increment rate of 16 000 counts per second at 10 Mb/s.;

aAggBroadcastFramesTxOK ATTRIBUTE

DERIVED FROM aCMCounter;
MATCHES FOR EQUALITY, ORDERING;
BEHAVIOUR bAggBroadcastFramesTxOK;
REGISTERED AS {iso(1) member-body(2) us(840) 802dot3(10006) csmacdmgt(30) attribute(7) aAggBroadcastFramesTxOK(123)};

bAggBroadcastFramesTxOK BEHAVIOUR

DEFINED AS See "BEHAVIOUR DEFINED AS" in 30.7.1.1.23.

NOTE—This counter has a maximum increment rate of 16 000 counts per second at 10 Mb/s.;

Copyright © 2000 IEEE. All rights reserved.
Authorized licensed use limited to: N.C. State University Libraries - Acquisitions & Discovery S. Downloaded on November 14,2023 at 14:15:01 UTC from IEEE Xplore. Restrictions apply.
Cisco v. Corrigent - IPR2023-00447
Patent Owner Corrigent Exhibit 2012-0054

aAggBroadcastFramesRxOK **ATTRIBUTE**

DERIVED FROM aCMCounter;
MATCHES FOR EQUALITY, ORDERING;
BEHAVIOUR bAggBroadcastFramesRxOK;
REGISTERED AS {iso(1) member-body(2) us(840) 802dot3(10006) csmacdmgt(30) attribute(7) aAggBroadcastFramesRxOK(124)};

bAggBroadcastFramesRxOK **BEHAVIOUR**

DEFINED AS See "BEHAVIOUR DEFINED AS" in 30.7.1.1.24.

NOTE—This counter has a maximum increment rate of 16 000 counts per second at 10 Mb/s.;

aAggFramesDiscardedOnTx **ATTRIBUTE**

DERIVED FROM aCMCounter;
MATCHES FOR EQUALITY, ORDERING;
BEHAVIOUR bAggFramesDiscardedOnTx;
REGISTERED AS {iso(1) member-body(2) us(840) 802dot3(10006) csmacdmgt(30) attribute(7) aAggFramesDiscardedOnTx(125)};

bAggFramesDiscardedOnTx **BEHAVIOUR**

DEFINED AS See "BEHAVIOUR DEFINED AS" in 30.7.1.1.25.

NOTE—This counter has a maximum increment rate of 16 000 counts per second at 10 Mb/s.;

aAggFramesDiscardedOnRx **ATTRIBUTE**

DERIVED FROM aCMCounter;
MATCHES FOR EQUALITY, ORDERING;
BEHAVIOUR bAggFramesDiscardedOnRx;
REGISTERED AS {iso(1) member-body(2) us(840) 802dot3(10006) csmacdmgt(30) attribute(7) aAggFramesDiscardedOnRx(126)};

bAggFramesDiscardedOnRx **BEHAVIOUR**

DEFINED AS See "BEHAVIOUR DEFINED AS" in 30.7.1.1.26.

NOTE—This counter has a maximum increment rate of 16 000 counts per second at 10 Mb/s.;

aAggFramesWithTxErrors **ATTRIBUTE**

DERIVED FROM aCMCounter;
MATCHES FOR EQUALITY, ORDERING;
BEHAVIOUR bAggFramesWithTxErrors;
REGISTERED AS {iso(1) member-body(2) us(840) 802dot3(10006) csmacdmgt(30) attribute(7) aAggFramesWithTxErrors(127)};

Copyright © 2000 IEEE. All rights reserved.

Authorized licensed use limited to: N.C. State University Libraries - Acquisitions & Discovery S. Downloaded on November 14,2023 at 14:15:01 UTC from IEEE Xplore. Restrictions apply.

Cisco v. Corrigent - IPR2023-00447
Patent Owner Corrigent Exhibit 2012-0055

bAggFramesWithTxErrors BEHAVIOUR

DEFINED AS See "BEHAVIOUR DEFINED AS" in 30.7.1.1.27.

NOTE—This counter has a maximum increment rate of 16 000 counts per second at 10 Mb/s.;

aAggFramesWithRxErrors ATTRIBUTE

DERIVED FROM aCMCounter;
MATCHES FOR EQUALITY, ORDERING;
BEHAVIOUR bAggFramesWithRxErrors;
REGISTERED AS {iso(1) member-body(2) us(840) 802dot3(10006) csmacdmgt(30) attribute(7) aAggFramesWithRxErrors(128)};

bAggFramesWithRxErrors BEHAVIOUR

DEFINED AS See "BEHAVIOUR DEFINED AS" in 30.7.1.1.28.

NOTE—This counter has a maximum increment rate of 16 000 counts per second at 10 Mb/s.;

aAggUnknownProtocolFrames ATTRIBUTE

DERIVED FROM aCMCounter;
MATCHES FOR EQUALITY, ORDERING;
BEHAVIOUR bAggUnknownProtocolFrames;
REGISTERED AS {iso(1) member-body(2) us(840) 802dot3(10006) csmacdmgt(30) attribute(7) aAggUnknownProtocolFrames(129)};

bAggUnknownProtocolFrames BEHAVIOUR

DEFINED AS See "BEHAVIOUR DEFINED AS" in 30.7.1.1.29.

NOTE—This counter has a maximum increment rate of 16 000 counts per second at 10 Mb/s.;

aAggLinkUpDownNotificationEnable ATTRIBUTE

WITH ATTRIBUTE SYNTAX IEEE802Dot3-MgmtAttributeModule.NotificationEnable;
MATCHES FOR EQUALITY;
BEHAVIOUR bAggLinkUpDownNotificationEnable;
REGISTERED AS {iso(1) member-body(2) us(840) 802dot3(10006) csmacdmgt(30) attribute(7) aAggLinkUpDownNotificationEnable(130)};

bAggLinkUpDownNotificationEnable BEHAVIOUR

DEFINED AS See "BEHAVIOUR DEFINED AS" in 30.7.1.1.30;

aAggPortList ATTRIBUTE

WITH ATTRIBUTE SYNTAX IEEE802Dot3-MgmtAttributeModule.AggPortList;
MATCHES FOR EQUALITY;
BEHAVIOUR bAggPortList;
REGISTERED AS {iso(1) member-body(2) us(840) 802dot3(10006) csmacdmgt(30) attribute(7) aAggPortList(131)};

Copyright © 2000 IEEE. All rights reserved.
Authorized licensed use limited to: N.C. State University Libraries - Acquisitions & Discovery S. Downloaded on November 14,2023 at 14:15:01 UTC from IEEE Xplore. Restrictions apply.
Cisco v. Corrigent - IPR2023-00447
Patent Owner Corrigent Exhibit 2012-0056

bAggPortList **BEHAVIOUR**

DEFINED AS See “BEHAVIOUR DEFINED AS” in 30.7.1.1.31;

aAggCollectorMaxDelay **ATTRIBUTE**

WITH ATTRIBUTE SYNTAX IEEE802Dot3-MgmtAttributeModule.CollectorMaxDelay;
MATCHES FOR EQUALITY;
BEHAVIOUR bAggCollectorMaxDelay;
REGISTERED AS {iso(1) member-body(2) us(840) 802dot3(10006) csmacdmgt(30) attribute(7) aAggCollectorMaxDelay(132)};

bAggCollectorMaxDelay **BEHAVIOUR**

DEFINED AS See “BEHAVIOUR DEFINED AS” in 30.7.1.1.32;

30A.11.3 Aggregator notifications

nAggLinkUpNotification **NOTIFICATION**

BEHAVIOUR bAggLinkUpNotification;
WITH INFORMATION SYNTAX IEEE802Dot3-MgmtAttributeModule.AggID;
REGISTERED AS {iso(1) member-body(2) us(840) 802dot3(10006) csmacdmgt(30) notification(10) nAggLinkUpNotification(6)};

bAggLinkUpNotification **BEHAVIOUR**

DEFINED AS See “BEHAVIOUR DEFINED AS” in 30.7.1.2.1;

nAggLinkDownNotification **NOTIFICATION**

BEHAVIOUR bAggLinkDownNotification;
WITH ATTRIBUTE SYNTAX IEEE802Dot3-MgmtAttributeModule.AggID;
REGISTERED AS {iso(1) member-body(2) us(840) 802dot3(10006) csmacdmgt(30) notification(10) nAggLinkDownNotification(7)};

bAggLinkDownNotification **BEHAVIOUR**

DEFINED AS See “BEHAVIOUR DEFINED AS” in 30.7.1.2.2;

30A.12 Aggregation Port managed object class

30A.12.1 Aggregation Port, formal definition

oAggregationPort **MANAGED OBJECT CLASS**

DERIVED FROM “CCITT Rec. X.721 (1992) | ISO/IEC 10165-2 : 1992”:top;
CHARACTERIZED BY
pAggregationPortBasic PACKAGE
ATTRIBUTES aAggPortID GET;
;

Copyright © 2000 IEEE. All rights reserved.

Authorized licensed use limited to: N.C. State University Libraries - Acquisitions & Discovery S. Downloaded on November 14,2023 at 14:15:01 UTC from IEEE Xplore. Restrictions apply.
Cisco v. Corrigent - IPR2023-00447
Patent Owner Corrigent Exhibit 2012-0057

```
;
CONDITIONAL PACKAGES
        pAggregationPortMandatory PACKAGE
                ATTRIBUTES      aAggPortActorSystemPriority             GET-REPLACE,
                                aAggPortActorSystemID                   GET,
                                aAggPortActorAdminKey                   GET-REPLACE,
                                aAggPortActorOperKey                    GET,
                                aAggPortPartnerAdminSystemPriority      GET-REPLACE,
                                aAggPortPartnerOperSystemPriority       GET,
                                aAggPortPartnerAdminSystemID            GET-REPLACE,
                                aAggPortPartnerOperSystemID             GET,
                                aAggPortPartnerAdminKey                 GET-REPLACE,
                                aAggPortPartnerOperKey                  GET,
                                aAggPortSelectedAggID                   GET,
                                aAggPortAttachedAggID                   GET,
                                aAggPortActorPort                       GET,
                                aAggPortActorPortPriority               GET-REPLACE,
                                aAggPortPartnerAdminPort                GET-REPLACE,
                                aAggPortPartnerOperPort                 GET,
                                aAggPortPartnerAdminPortPriority        GET-REPLACE,
                                aAggPortPartnerOperPortPriority         GET,
                                aAggPortActorAdminState                 GET-REPLACE,
                                aAggPortActorOperState                  GET,
                                aAggPortPartnerAdminState               GET-REPLACE,
                                aAggPortPartnerOperState                GET,
                                aAggPortAggregateOrIndividual           GET;
                REGISTERED AS
                                {iso(1) member-body(2) us(840) 802dot3(10006) csmacd-
                mgt(30) package(4) pAggregationPortMandatory(22)};
                PRESENT IF      Conformance to Link Aggregation management is desired;
;
REGISTERED AS   {iso(1) member-body(2) us(840) 802dot3(10006) csmacdmgt(30) managedOb-
                jectClass(3) oAggregationPort(11)};
```

nbAggregationPort **NAME BINDING**

```
SUBORDINATE OBJECT CLASS        oAggregationPort;
NAMED BY SUPERIOR OBJECT CLASS  oAggregator;
WITH ATTRIBUTE                  aAggPortID;
REGISTERED AS   {iso(1) member-body(2) us(840) 802dot3(10006) csmacdmgt(30) nameBind-
                ing(6) nbAggregationPortName(21)};
```

30A.12.2 Aggregation Port attributes

aAggPortID **ATTRIBUTE**

```
WITH ATTRIBUTE SYNTAX   IEEE802Dot3-MgmtAttributeModule.AggPortID;
MATCHES FOR             EQUALITY;
BEHAVIOUR               bAggPortID;
REGISTERED AS   {iso(1) member-body(2) us(840) 802dot3(10006) csmacdmgt(30) attribute(7)
                aAggPortID(133)};
```


Copyright © 2000 IEEE. All rights reserved.
Authorized licensed use limited to: N.C. State University Libraries - Acquisitions & Discovery S. Downloaded on November 14,2023 at 14:15:01 UTC from IEEE Xplore. Restrictions apply.
Cisco v. Corrigent - IPR2023-00447
Patent Owner Corrigent Exhibit 2012-0058

bAggPortID **BEHAVIOUR**

DEFINED AS See “BEHAVIOUR DEFINED AS” in 30.7.2.1.1;

aAggPortActorSystemPriority **ATTRIBUTE**

WITH ATTRIBUTE SYNTAX IEEE802Dot3-MgmtAttributeModule.PriorityValue;
MATCHES FOR EQUALITY, ORDERING;
BEHAVIOUR bAggPortActorSystemPriority;
REGISTERED AS {iso(1) member-body(2) us(840) 802dot3(10006) csmacdmgt(30) attribute(7) aAggPortActorSystemPriority(134)};

bAggPortActorSystemPriority **BEHAVIOUR**

DEFINED AS See “BEHAVIOUR DEFINED AS” in 30.7.2.1.2;

aAggPortActorSystemID **ATTRIBUTE**

WITH ATTRIBUTE SYNTAX IEEE802Dot3-MgmtAttributeModule.MACAddress;
MATCHES FOR EQUALITY, ORDERING;
BEHAVIOUR bAggPortActorSystemID;
REGISTERED AS {iso(1) member-body(2) us(840) 802dot3(10006) csmacdmgt(30) attribute(7) aAggPortActorSystemID(135)};

bAggPortActorSystemID **BEHAVIOUR**

DEFINED AS See “BEHAVIOUR DEFINED AS” in 30.7.2.1.3;

aAggPortActorAdminKey **ATTRIBUTE**

WITH ATTRIBUTE SYNTAX IEEE802Dot3-MgmtAttributeModule.KeyValue;
MATCHES FOR EQUALITY;
BEHAVIOUR bAggPortActorAdminKey;
REGISTERED AS {iso(1) member-body(2) us(840) 802dot3(10006) csmacdmgt(30) attribute(7) aAggPortActorAdminKey(136)};

bAggPortActorAdminKey **BEHAVIOUR**

DEFINED AS See “BEHAVIOUR DEFINED AS” in 30.7.2.1.4;

aAggPortActorOperKey **ATTRIBUTE**

WITH ATTRIBUTE SYNTAX IEEE802Dot3-MgmtAttributeModule.KeyValue;
MATCHES FOR EQUALITY;
BEHAVIOUR bAggPortActorOperKey;
REGISTERED AS {iso(1) member-body(2) us(840) 802dot3(10006) csmacdmgt(30) attribute(7) aAggPortActorOperKey(137)};

bAggPortActorOperKey **BEHAVIOUR**

DEFINED AS See “BEHAVIOUR DEFINED AS” in 30.7.2.1.5;

Copyright © 2000 IEEE. All rights reserved.

Authorized licensed use limited to: N.C. State University Libraries - Acquisitions & Discovery S. Downloaded on November 14,2023 at 14:15:01 UTC from IEEE Xplore. Restrictions apply.

Cisco v. Corrigent - IPR2023-00447
Patent Owner Corrigent Exhibit 2012-0059

aAggPortPartnerAdminSystemPriority ATTRIBUTE

WITH ATTRIBUTE SYNTAX IEEE802Dot3-MgmtAttributeModule.PriorityValue;
MATCHES FOR EQUALITY, ORDERING;
BEHAVIOUR bAggPortPartnerAdminSystemPriority;
REGISTERED AS {iso(1) member-body(2) us(840) 802dot3(10006) csmacdmgt(30) attribute(7) aAggPortPartnerAdminSystemPriority(138)};

bAggPortPartnerAdminSystemPriority BEHAVIOUR

DEFINED AS See “BEHAVIOUR DEFINED AS” in 30.7.2.1.6;

aAggPortPartnerOperSystemPriority ATTRIBUTE

WITH ATTRIBUTE SYNTAX IEEE802Dot3-MgmtAttributeModule.PriorityValue;
MATCHES FOR EQUALITY, ORDERING;
BEHAVIOUR bAggPortPartnerOperSystemPriority;
REGISTERED AS {iso(1) member-body(2) us(840) 802dot3(10006) csmacdmgt(30) attribute(7) aAggPortPartnerOperSystemPriority(139)};

bAggPortPartnerOperSystemPriority BEHAVIOUR

DEFINED AS See “BEHAVIOUR DEFINED AS” in 30.7.2.1.7;

aAggPortPartnerAdminSystemID ATTRIBUTE

WITH ATTRIBUTE SYNTAX IEEE802Dot3-MgmtAttributeModule.MACAddress;
MATCHES FOR EQUALITY, ORDERING;
BEHAVIOUR bAggPortPartnerAdminSystemID;
REGISTERED AS {iso(1) member-body(2) us(840) 802dot3(10006) csmacdmgt(30) attribute(7) aAggPortPartnerAdminSystemID(140)};

bAggPortPartnerAdminSystemID BEHAVIOUR

DEFINED AS See “BEHAVIOUR DEFINED AS” in 30.7.2.1.8;

aAggPortPartnerOperSystemID ATTRIBUTE

WITH ATTRIBUTE SYNTAX IEEE802Dot3-MgmtAttributeModule.MACAddress;
MATCHES FOR EQUALITY, ORDERING;
BEHAVIOUR baAggPortPartnerOperSystemID;
REGISTERED AS {iso(1) member-body(2) us(840) 802dot3(10006) csmacdmgt(30) attribute(7) aAggPortPartnerOperSystemID(141)};

bAggPortPartnerOperSystemID BEHAVIOUR

DEFINED AS See “BEHAVIOUR DEFINED AS” in 30.7.2.1.9;

aAggPortPartnerAdminKey ATTRIBUTE

WITH ATTRIBUTE SYNTAX IEEE802Dot3-MgmtAttributeModule.KeyValue;
MATCHES FOR EQUALITY;
BEHAVIOUR bAggPortPartnerAdminKey;

Copyright © 2000 IEEE. All rights reserved.
Authorized licensed use limited to: N.C. State University Libraries - Acquisitions & Discovery S. Downloaded on November 14,2023 at 14:15:01 UTC from IEEE Xplore. Restrictions apply.
Cisco v. Corrigent - IPR2023-00447
Patent Owner Corrigent Exhibit 2012-0060

REGISTERED AS {iso(1) member-body(2) us(840) 802dot3(10006) csmacdmgt(30) attribute(7) aAggPortPartnerAdminKey(142)};

bAggPortPartnerAdminKey BEHAVIOUR

DEFINED AS See “BEHAVIOUR DEFINED AS” in 30.7.2.1.10;

aAggPortPartnerOperKey ATTRIBUTE

WITH ATTRIBUTE SYNTAX IEEE802Dot3-MgmtAttributeModule.KeyValue;
MATCHES FOR EQUALITY;
BEHAVIOUR bAggPortPartnerOperKey;
REGISTERED AS {iso(1) member-body(2) us(840) 802dot3(10006) csmacdmgt(30) attribute(7) aAggPortPartnerOperKey(143)};

bAggPortPartnerOperKey BEHAVIOUR

DEFINED AS See “BEHAVIOUR DEFINED AS” in 30.7.2.1.11;

aAggPortSelectedAggID ATTRIBUTE

WITH ATTRIBUTE SYNTAX IEEE802Dot3-MgmtAttributeModule.AggID;
MATCHES FOR EQUALITY;
BEHAVIOUR bAggPortSelectedAggID;
REGISTERED AS {iso(1) member-body(2) us(840) 802dot3(10006) csmacdmgt(30) attribute(7) aAggPortSelectedAggID(144)};

bAggPortSelectedAggID BEHAVIOUR

DEFINED AS See “BEHAVIOUR DEFINED AS” in 30.7.2.1.12;

aAggPortAttachedAggID ATTRIBUTE

WITH ATTRIBUTE SYNTAX IEEE802Dot3-MgmtAttributeModule.AggID;
MATCHES FOR EQUALITY;
BEHAVIOUR bAggPortAttachedAggID;
REGISTERED AS {iso(1) member-body(2) us(840) 802dot3(10006) csmacdmgt(30) attribute(7) aAggPortAttachedAggID(145)};

bAggPortAttachedAggID BEHAVIOUR

DEFINED AS See “BEHAVIOUR DEFINED AS” in 30.7.2.1.13;

aAggPortActorPort ATTRIBUTE

WITH ATTRIBUTE SYNTAX IEEE802Dot3-MgmtAttributeModule.PortNumber;
MATCHES FOR EQUALITY, ORDERING;
BEHAVIOUR bAggPortActorPort;
REGISTERED AS {iso(1) member-body(2) us(840) 802dot3(10006) csmacdmgt(30) attribute(7) aAggPortActorPort(146)};

bAggPortActorPort BEHAVIOUR

DEFINED AS See “BEHAVIOUR DEFINED AS” in 30.7.2.1.14;

Copyright © 2000 IEEE. All rights reserved.

Authorized licensed use limited to: N.C. State University Libraries - Acquisitions & Discovery S. Downloaded on November 14,2023 at 14:15:01 UTC from IEEE Xplore. Restrictions apply.

Cisco v. Corrigent - IPR2023-00447
Patent Owner Corrigent Exhibit 2012-0061

aAggPortActorPortPriority ATTRIBUTE

WITH ATTRIBUTE SYNTAX IEEE802Dot3-MgmtAttributeModule.PriorityValue;
MATCHES FOR EQUALITY, ORDERING;
BEHAVIOUR bAggPortActorPortPriority;
REGISTERED AS {iso(1) member-body(2) us(840) 802dot3(10006) csmacdmgt(30) attribute(7) aAggPortActorPortPriority(147)};

bAggPortActorPortPriority BEHAVIOUR

DEFINED AS See "BEHAVIOUR DEFINED AS" in 30.7.2.1.15;

aAggPortPartnerAdminPort ATTRIBUTE

WITH ATTRIBUTE SYNTAX IEEE802Dot3-MgmtAttributeModule.PortNumber;
MATCHES FOR EQUALITY, ORDERING;
BEHAVIOUR bAggPortPartnerAdminPort;
REGISTERED AS {iso(1) member-body(2) us(840) 802dot3(10006) csmacdmgt(30) attribute(7) aAggPortPartnerAdminPort(148)};

bAggPortPartnerAdminPort BEHAVIOUR

DEFINED AS See "BEHAVIOUR DEFINED AS" in 30.7.2.1.16;

aAggPortPartnerOperPort ATTRIBUTE

WITH ATTRIBUTE SYNTAX IEEE802Dot3-MgmtAttributeModule.PortNumber;
MATCHES FOR EQUALITY, ORDERING;
BEHAVIOUR bAggPortPartnerOperPort;
REGISTERED AS {iso(1) member-body(2) us(840) 802dot3(10006) csmacdmgt(30) attribute(7) aAggPortPartnerOperPort(149)};

bAggPortPartnerOperPort BEHAVIOUR

DEFINED AS See "BEHAVIOUR DEFINED AS" in 30.7.2.1.17;

aAggPortPartnerAdminPortPriority ATTRIBUTE

WITH ATTRIBUTE SYNTAX IEEE802Dot3-MgmtAttributeModule.PriorityValue;
MATCHES FOR EQUALITY, ORDERING;
BEHAVIOUR bAggPortPartnerAdminPortPriority;
REGISTERED AS {iso(1) member-body(2) us(840) 802dot3(10006) csmacdmgt(30) attribute(7) aAggPortPartnerAdminPortPriority(150)};

bAggPortPartnerAdminPortPriority BEHAVIOUR

DEFINED AS See "BEHAVIOUR DEFINED AS" in 30.7.2.1.18;

aAggPortPartnerOperPortPriority ATTRIBUTE

WITH ATTRIBUTE SYNTAX IEEE802Dot3-MgmtAttributeModule.PriorityValue;
MATCHES FOR EQUALITY, ORDERING;
BEHAVIOUR bAggPortPartnerOperPortPriority;

Copyright © 2000 IEEE. All rights reserved.
Authorized licensed use limited to: N.C. State University Libraries - Acquisitions & Discovery S. Downloaded on November 14,2023 at 14:15:01 UTC from IEEE Xplore. Restrictions apply.
Cisco v. Corrigent - IPR2023-00447
Patent Owner Corrigent Exhibit 2012-0062

REGISTERED AS {iso(1) member-body(2) us(840) 802dot3(10006) csmacdmgt(30) attribute(7) aAggPortPartnerOperPortPriority(151)};

bAggPortPartnerOperPortPriority BEHAVIOUR

DEFINED AS See "BEHAVIOUR DEFINED AS" in 30.7.2.1.19;

aAggPortActorAdminState ATTRIBUTE

WITH ATTRIBUTE SYNTAX IEEE802Dot3-MgmtAttributeModule.AggPortState;
MATCHES FOR EQUALITY;
BEHAVIOUR bAggPortActorAdminState;
REGISTERED AS {iso(1) member-body(2) us(840) 802dot3(10006) csmacdmgt(30) attribute(7) aAggPortActorAdminState(152)};

bAggPortActorAdminState BEHAVIOUR

DEFINED AS See "BEHAVIOUR DEFINED AS" in 30.7.2.1.20;

aAggPortActorOperState ATTRIBUTE

WITH ATTRIBUTE SYNTAX IEEE802Dot3-MgmtAttributeModule.AggPortState;
MATCHES FOR EQUALITY;
BEHAVIOUR bAggPortActorOperState;
REGISTERED AS {iso(1) member-body(2) us(840) 802dot3(10006) csmacdmgt(30) attribute(7) aAggPortActorOperState(153)};

bAggPortActorOperState BEHAVIOUR

DEFINED AS See "BEHAVIOUR DEFINED AS" in 30.7.2.1.21;

aAggPortPartnerAdminState ATTRIBUTE

WITH ATTRIBUTE SYNTAX IEEE802Dot3-MgmtAttributeModule.AggPortState;
MATCHES FOR EQUALITY, ORDERING;
BEHAVIOUR bAggPortPartnerAdminState;
REGISTERED AS {iso(1) member-body(2) us(840) 802dot3(10006) csmacdmgt(30) attribute(7) aAggPortPartnerAdminState(154)};

bAggPortPartnerAdminState BEHAVIOUR

DEFINED AS See "BEHAVIOUR DEFINED AS" in 30.7.2.1.22;

aAggPortPartnerOperState ATTRIBUTE

WITH ATTRIBUTE SYNTAX IEEE802Dot3-MgmtAttributeModule.AggPortState;
MATCHES FOR EQUALITY, ORDERING;
BEHAVIOUR bAggPortPartnerOperState;
REGISTERED AS {iso(1) member-body(2) us(840) 802dot3(10006) csmacdmgt(30) attribute(7) aAggPortPartnerOperState(155)};

bAggPortPartnerOperState BEHAVIOUR

DEFINED AS See "BEHAVIOUR DEFINED AS" in 30.7.2.1.23;

Copyright © 2000 IEEE. All rights reserved.

Authorized licensed use limited to: N.C. State University Libraries - Acquisitions & Discovery S. Downloaded on November 14,2023 at 14:15:01 UTC from IEEE Xplore. Restrictions apply.

Cisco v. Corrigent - IPR2023-00447
Patent Owner Corrigent Exhibit 2012-0063

aAggPortAggregateOrIndividual ATTRIBUTE

WITH ATTRIBUTE SYNTAX IEEE802Dot3-MgmtAttributeModule.AggOrInd;
MATCHES FOR EQUALITY;
BEHAVIOUR bAggPortAggregateOrIndividual;
REGISTERED AS {iso(1) member-body(2) us(840) 802dot3(10006) csmacdmgt(30) attribute(7) aAggPortAggregateOrIndividual(156)};

bAggPortAggregateOrIndividual BEHAVIOUR

DEFINED AS See "BEHAVIOUR DEFINED AS" in 30.7.2.1.24;

30A.13 Aggregation Port Statistics managed object class

30A.13.1 Aggregation Port Statistics, formal definition

oAggPortStats MANAGED OBJECT CLASS

DERIVED FROM "CCITT Rec. X.721 (1992) | ISO/IEC 10165-2 : 1992":top;
CONDITIONAL PACKAGES
pAggPortStats PACKAGE
ATTRIBUTES aAggPortStatsID GET,
aAggPortStatsLACPDUsRx GET,
aAggPortStatsMarkerPDUsRx GET,
aAggPortStatsMarkerResponsePDUsRx GET,
aAggPortStatsUnknownRx GET,
aAggPortStatsIllegalRx GET,
aAggPortStatsLACPDUsTx GET,
aAggPortStatsMarkerPDUsTx GET,
aAggPortStatsMarkerResponsePDUsTx GET;
REGISTERED AS
{iso(1) member-body(2) us(840) 802dot3(10006) csmacdmgt(30) package(4) pAggPortStats(23)};
PRESENT IF The Aggregation Port Statistics package is supported;
;
REGISTERED AS {iso(1) member-body(2) us(840) 802dot3(10006) csmacdmgt(30) managedObjectClass(3) oAggPortStats(12)};

nbAggPortStats NAME BINDING

SUBORDINATE OBJECT CLASS oAggPortStats;
NAMED BY SUPERIOR OBJECT CLASS oAggregationPort;
WITH ATTRIBUTE aAggPortStatsID;
REGISTERED AS {iso(1) member-body(2) us(840) 802dot3(10006) csmacdmgt(30) nameBinding(6) nbAggPortStats(22)};

30A.13.2 Aggregation Port Statistics attributes

aAggPortStatsID ATTRIBUTE

WITH ATTRIBUTE SYNTAX IEEE802Dot3-MgmtAttributeModule.AggPortID;

Copyright © 2000 IEEE. All rights reserved.
Authorized licensed use limited to: N.C. State University Libraries - Acquisitions & Discovery S. Downloaded on November 14,2023 at 14:15:01 UTC from IEEE Xplore. Restrictions apply.
Cisco v. Corrigent - IPR2023-00447
Patent Owner Corrigent Exhibit 2012-0064

MATCHES FOR EQUALITY;
BEHAVIOUR bAggPortStatsID;
REGISTERED AS {iso(1) member-body(2) us(840) 802dot3(10006) csmacdmgt(30) attribute(7) aAggPortStatsID(157)};

bAggPortStatsID BEHAVIOUR

DEFINED AS See "BEHAVIOUR DEFINED AS" in 30.7.3.1.1;

aAggPortStatsLACPDUsRx ATTRIBUTE

DERIVED FROM aCMCounter;
MATCHES FOR EQUALITY, ORDERING;
BEHAVIOUR bAggPortStatsLACPDUsRx;
REGISTERED AS {iso(1) member-body(2) us(840) 802dot3(10006) csmacdmgt(30) attribute(7) aAggPortStatsLACPDUsRx(158)};

bAggPortStatsLACPDUsRx BEHAVIOUR

DEFINED AS See "BEHAVIOUR DEFINED AS" in 30.7.3.1.2.

NOTE—This counter has a maximum increment rate of 5 counts per second at 10 Mb/s.;

aAggPortStatsMarkerPDUsRx ATTRIBUTE

DERIVED FROM aCMCounter;
MATCHES FOR EQUALITY, ORDERING;
BEHAVIOUR bAggPortStatsMarkerPDUsRx;
REGISTERED AS {iso(1) member-body(2) us(840) 802dot3(10006) csmacdmgt(30) attribute(7) aAggPortStatsMarkerPDUsRx(159)};

bAggPortStatsMarkerPDUsRx BEHAVIOUR

DEFINED AS See "BEHAVIOUR DEFINED AS" in 30.7.3.1.3.

NOTE—This counter has a maximum increment rate of 5 counts per second at 10 Mb/s.;

aAggPortStatsMarkerResponsePDUsRx ATTRIBUTE

DERIVED FROM aCMCounter;
MATCHES FOR EQUALITY, ORDERING;
BEHAVIOUR bAggPortStatsMarkerResponsePDUsRx;
REGISTERED AS {iso(1) member-body(2) us(840) 802dot3(10006) csmacdmgt(30) attribute(7) aAggPortStatsMarkerResponsePDUsRx(160)};

bAggPortStatsMarkerResponsePDUsRx BEHAVIOUR

DEFINED AS See "BEHAVIOUR DEFINED AS" in 30.7.3.1.4.

NOTE—This counter has a maximum increment rate of 5 counts per second at 10 Mb/s.;

aAggPortStatsUnknownRx ATTRIBUTE

DERIVED FROM aCMCounter;
MATCHES FOR EQUALITY, ORDERING;
BEHAVIOUR bAggPortStatsUnknownRx;

Copyright © 2000 IEEE. All rights reserved.

Authorized licensed use limited to: N.C. State University Libraries - Acquisitions & Discovery S. Downloaded on November 14,2023 at 14:15:01 UTC from IEEE Xplore. Restrictions apply.

Cisco v. Corrigent - IPR2023-00447
Patent Owner Corrigent Exhibit 2012-0065

REGISTERED AS {iso(1) member-body(2) us(840) 802dot3(10006) csmacdmgt(30) attribute(7) aAggPortStatsUnknownRx(161)};

bAggPortStatsUnknownRx BEHAVIOUR

DEFINED AS See "BEHAVIOUR DEFINED AS" in 30.7.3.1.5.

NOTE—This counter has a maximum increment rate of 50 counts per second at 10 Mb/s.;

aAggPortStatsIllegalRx ATTRIBUTE

DERIVED FROM aCMCounter;
MATCHES FOR EQUALITY, ORDERING;
BEHAVIOUR bAggPortStatsIllegalRx;
REGISTERED AS {iso(1) member-body(2) us(840) 802dot3(10006) csmacdmgt(30) attribute(7) aAggPortStatsIllegalRx(162)};

bAggPortStatsIllegalRx BEHAVIOUR

DEFINED AS See "BEHAVIOUR DEFINED AS" in 30.7.3.1.6.

NOTE—This counter has a maximum increment rate of 50 counts per second at 10 Mb/s.;

aAggPortStatsLACPDUsTx ATTRIBUTE

DERIVED FROM aCMCounter;
MATCHES FOR EQUALITY, ORDERING;
BEHAVIOUR bAggPortStatsLACPDUsTx;
REGISTERED AS {iso(1) member-body(2) us(840) 802dot3(10006) csmacdmgt(30) attribute(7) aAggPortStatsLACPDUsTx(163)};

bAggPortStatsLACPDUsTx BEHAVIOUR

DEFINED AS See "BEHAVIOUR DEFINED AS" in 30.7.3.1.7.

NOTE—This counter has a maximum increment rate of 5 counts per second at 10 Mb/s.;

aAggPortStatsMarkerPDUsTx ATTRIBUTE

DERIVED FROM aCMCounter;
MATCHES FOR EQUALITY, ORDERING;
BEHAVIOUR bAggPortStatsMarkerPDUsTx;
REGISTERED AS {iso(1) member-body(2) us(840) 802dot3(10006) csmacdmgt(30) attribute(7) aAggPortStatsMarkerPDUsTx(164)};

bAggPortStatsMarkerPDUsTx BEHAVIOUR

DEFINED AS See "BEHAVIOUR DEFINED AS" in 30.7.3.1.8.

NOTE—This counter has a maximum increment rate of 5 counts per second at 10 Mb/s.;

aAggPortStatsMarkerResponsePDUsTx ATTRIBUTE

DERIVED FROM aCMCounter;
MATCHES FOR EQUALITY, ORDERING;
BEHAVIOUR bAggPortStatsMarkerResponsePDUsTx;

Copyright © 2000 IEEE. All rights reserved.
Authorized licensed use limited to: N.C. State University Libraries - Acquisitions & Discovery S. Downloaded on November 14,2023 at 14:15:01 UTC from IEEE Xplore. Restrictions apply.
Cisco v. Corrigent - IPR2023-00447
Patent Owner Corrigent Exhibit 2012-0066

REGISTERED AS {iso(1) member-body(2) us(840) 802dot3(10006) csmacdmgt(30) attribute(7) aAggPortStatsMarkerResponsePDUsTx(165)};

bAggPortStatsMarkerResponsePDUsTx BEHAVIOUR

DEFINED AS See "BEHAVIOUR DEFINED AS" in 30.7.3.1.9.

NOTE—This counter has a maximum increment rate of 5 counts per second at 10 Mb/s.;

30A.14 Aggregation Port Debug Information managed object class

30A.14.1 Aggregation Port Debug Information, formal definition

oAggPortDebugInformation MANAGED OBJECT CLASS

```
DERIVED FROM                    "CCITT Rec. X.721 (1992) | ISO/IEC 10165-2 : 1992":top;
CONDITIONAL PACKAGES
        pLACPDebug              PACKAGE
                ATTRIBUTES      aAggPortDebugInformationID                  GET,
                                aAggPortDebugRxState                        GET,
                                aAggPortDebugLastRxTime                     GET,
                                aAggPortDebugMuxState                       GET,
                                aAggPortDebugMuxReason                      GET,
                                aAggPortDebugActorChurnState                GET,
                                aAggPortDebugPartnerChurnState              GET,
                                aAggPortDebugActorChurnCount                GET,
                                aAggPortDebugPartnerChurnCount              GET,
                                aAggPortDebugActorSyncTransitionCount       GET,
                                aAggPortDebugPartnerSyncTransitionCount     GET,
                                aAggPortDebugActorChangeCount               GET,
                                aAggPortDebugPartnerChangeCount             GET;
                REGISTERED AS
                                {iso(1) member-body(2) us(840) 802dot3(10006) csmacd-
                mgt(30) package(4) pAggPortDebugInformation(24)};
                PRESENT IF      The Aggregation Port Debug Information package is sup-
                ported;
;
REGISTERED AS   {iso(1) member-body(2) us(840) 802dot3(10006) csmacdmgt(30) managedOb-
                jectClass(3) oAggPortDebugInformation(13)};
```

nbAggPortDebugInformation NAME BINDING

```
SUBORDINATE OBJECT CLASS            oAggPortDebugInformation;
NAMED BY SUPERIOR OBJECT CLASS      oAggregationPort;
WITH ATTRIBUTE                      aAggPortDebugInformationID
REGISTERED AS   {iso(1) member-body(2) us(840) 802dot3(10006) csmacdmgt(30) nameBind-
                ing(6) nbAggPortDebugInformation(23)};
```

Copyright © 2000 IEEE. All rights reserved.

Authorized licensed use limited to: N.C. State University Libraries - Acquisitions & Discovery S. Downloaded on November 14,2023 at 14:15:01 UTC from IEEE Xplore. Restrictions apply.

Cisco v. Corrigent - IPR2023-00447
Patent Owner Corrigent Exhibit 2012-0067

30A.14.2 Aggregation Port Debug Information attributes

aAggPortDebugInformationID ATTRIBUTE

WITH ATTRIBUTE SYNTAX IEEE802Dot3-MgmtAttributeModule.AggPortID;
MATCHES FOR EQUALITY, ORDERING;
BEHAVIOUR bAggPortDebugInformationID;
REGISTERED AS {iso(1) member-body(2) us(840) 802dot3(10006) csmacdmgt(30) attribute(7) aAggPortDebugInformationID(166)};

bAggPortDebugInformationID BEHAVIOUR

DEFINED AS See “BEHAVIOUR DEFINED AS” in 30.7.4.1.1;

aAggPortDebugRxState ATTRIBUTE

WITH ATTRIBUTE SYNTAX IEEE802Dot3-MgmtAttributeModule.RxState;
MATCHES FOR EQUALITY;
BEHAVIOUR bAggPortDebugRxState;
REGISTERED AS {iso(1) member-body(2) us(840) 802dot3(10006) csmacdmgt(30) attribute(7) aAggPortDebugRxState(167)};

bAggPortDebugRxState BEHAVIOUR

DEFINED AS See “BEHAVIOUR DEFINED AS” in 30.7.4.1.2;

aAggPortDebugLastRxTime ATTRIBUTE

WITH ATTRIBUTE SYNTAX IEEE802Dot3-MgmtAttributeModule.Integer32;
MATCHES FOR EQUALITY, ORDERING;
BEHAVIOUR bAggPortDebugLastRxTime;
REGISTERED AS {iso(1) member-body(2) us(840) 802dot3(10006) csmacdmgt(30) attribute(7) aAggPortDebugLastRxTime(168)};

bAggPortDebugLastRxTime BEHAVIOUR

DEFINED AS See “BEHAVIOUR DEFINED AS” in 30.7.4.1.3;

aAggPortDebugMuxState ATTRIBUTE

WITH ATTRIBUTE SYNTAX IEEE802Dot3-MgmtAttributeModule.MuxState;
MATCHES FOR EQUALITY;
BEHAVIOUR bAggPortDebugMuxState;
REGISTERED AS {iso(1) member-body(2) us(840) 802dot3(10006) csmacdmgt(30) attribute(7) aAggPortDebugMuxState(169)};

bAggPortDebugMuxState BEHAVIOUR

DEFINED AS See “BEHAVIOUR DEFINED AS” in 30.7.4.1.4;

Copyright © 2000 IEEE. All rights reserved.
Authorized licensed use limited to: N.C. State University Libraries - Acquisitions & Discovery S. Downloaded on November 14,2023 at 14:15:01 UTC from IEEE Xplore. Restrictions apply.
Cisco v. Corrigent - IPR2023-00447
Patent Owner Corrigent Exhibit 2012-0068

aAggPortDebugMuxReason **ATTRIBUTE**

WITH ATTRIBUTE SYNTAX IEEE802Dot3-MgmtAttributeModule.DescriptionString;
MATCHES FOR EQUALITY;
BEHAVIOUR bAggPortDebugMuxReason;
REGISTERED AS {iso(1) member-body(2) us(840) 802dot3(10006) csmacdmgt(30) attribute(7) aAggPortDebugMuxReason(170)};

bAggPortDebugMuxReason **BEHAVIOUR**

DEFINED AS See "BEHAVIOUR DEFINED AS" in 30.7.4.1.5;

aAggPortDebugActorChurnState **ATTRIBUTE**

WITH ATTRIBUTE SYNTAX IEEE802Dot3-MgmtAttributeModule.ChurnState;
MATCHES FOR EQUALITY;
BEHAVIOUR bAggPortDebugActorChurnState;
REGISTERED AS {iso(1) member-body(2) us(840) 802dot3(10006) csmacdmgt(30) attribute(7) aAggPortDebugActorChurnState(171)};

bAggPortDebugActorChurnState **BEHAVIOUR**

DEFINED AS See "BEHAVIOUR DEFINED AS" in 30.7.4.1.6;

aAggPortDebugPartnerChurnState **ATTRIBUTE**

WITH ATTRIBUTE SYNTAX IEEE802Dot3-MgmtAttributeModule.ChurnState;
MATCHES FOR EQUALITY;
BEHAVIOUR bAggPortDebugPartnerChurnState;
REGISTERED AS {iso(1) member-body(2) us(840) 802dot3(10006) csmacdmgt(30) attribute(7) aAggPortDebugPartnerChurnState(172)};

bAggPortDebugPartnerChurnState **BEHAVIOUR**

DEFINED AS See "BEHAVIOUR DEFINED AS" in 30.7.4.1.7;

aAggPortDebugActorChurnCount **ATTRIBUTE**

DERIVED FROM aCMCounter;
MATCHES FOR EQUALITY, ORDERING;
BEHAVIOUR bAggPortDebugActorChurnCount;
REGISTERED AS {iso(1) member-body(2) us(840) 802dot3(10006) csmacdmgt(30) attribute(7) aAggPortDebugActorChurnCount(173)};

bAggPortDebugActorChurnCount **BEHAVIOUR**

DEFINED AS See "BEHAVIOUR DEFINED AS" in 30.7.4.1.8.

NOTE—This counter has a maximum increment rate of 5 counts per second.;

Copyright © 2000 IEEE. All rights reserved.

Authorized licensed use limited to: N.C. State University Libraries - Acquisitions & Discovery S. Downloaded on November 14,2023 at 14:15:01 UTC from IEEE Xplore. Restrictions apply.

Cisco v. Corrigent - IPR2023-00447
Patent Owner Corrigent Exhibit 2012-0069

aAggPortDebugPartnerChurnCount ATTRIBUTE

DERIVED FROM aCMCounter;
MATCHES FOR EQUALITY, ORDERING;
BEHAVIOUR bAggPortDebugPartnerChurnCount;
REGISTERED AS {iso(1) member-body(2) us(840) 802dot3(10006) csmacdmgt(30) attribute(7) aAggPortDebugPartnerChurnCount(174)};

bAggPortDebugPartnerChurnCount BEHAVIOUR

DEFINED AS See "BEHAVIOUR DEFINED AS" in 30.7.4.1.9.

NOTE—This counter has a maximum increment rate of 5 counts per second.;

aAggPortDebugActorSyncTransitionCount ATTRIBUTE

DERIVED FROM aCMCounter;
MATCHES FOR EQUALITY, ORDERING;
BEHAVIOUR bAggPortDebugActorSyncTransitionCount;
REGISTERED AS {iso(1) member-body(2) us(840) 802dot3(10006) csmacdmgt(30) attribute(7) aAggPortDebugActorSyncTransitionCount(175)};

bAggPortDebugActorSyncTransitionCount BEHAVIOUR

DEFINED AS See "BEHAVIOUR DEFINED AS" in 30.7.4.1.10.

NOTE—This counter has a maximum increment rate of 5 counts per second.;

aAggPortDebugPartnerSyncTransitionCount ATTRIBUTE

DERIVED FROM aCMCounter;
MATCHES FOR EQUALITY, ORDERING;
BEHAVIOUR bAggPortDebugPartnerSyncTransitionCount;
REGISTERED AS {iso(1) member-body(2) us(840) 802dot3(10006) csmacdmgt(30) attribute(7) aAggPortDebugPartnerSyncTransitionCount(176)};

bAggPortDebugPartnerSyncTransitionCount BEHAVIOUR

DEFINED AS See "BEHAVIOUR DEFINED AS" in 30.7.4.1.11.

NOTE—This counter has a maximum increment rate of 5 counts per second.;

aAggPortDebugActorChangeCount ATTRIBUTE

DERIVED FROM aCMCounter;
MATCHES FOR EQUALITY, ORDERING;
BEHAVIOUR bAggPortDebugActorChangeCount;
REGISTERED AS {iso(1) member-body(2) us(840) 802dot3(10006) csmacdmgt(30) attribute(7) aAggPortDebugActorChangeCount(177)};

Copyright © 2000 IEEE. All rights reserved.
Authorized licensed use limited to: N.C. State University Libraries - Acquisitions & Discovery S. Downloaded on November 14,2023 at 14:15:01 UTC from IEEE Xplore. Restrictions apply.
Cisco v. Corrigent - IPR2023-00447
Patent Owner Corrigent Exhibit 2012-0070

bAggPortDebugActorChangeCount BEHAVIOUR

DEFINED AS See "BEHAVIOUR DEFINED AS" in 30.7.4.1.12.

NOTE—This counter has a maximum increment rate of 5 counts per second.;

aAggPortDebugPartnerChangeCount ATTRIBUTE

DERIVED FROM aCMCounter;
MATCHES FOR EQUALITY, ORDERING;
BEHAVIOUR bAggPortDebugPartnerChangeCount;
REGISTERED AS {iso(1) member-body(2) us(840) 802dot3(10006) csmacdmgt(30) attribute(7) aAggPortDebugPartnerChangeCount(178)};

bAggPortDebugPartnerChangeCount BEHAVIOUR

DEFINED AS See "BEHAVIOUR DEFINED AS" in 30.7.4.1.13.

NOTE—This counter has a maximum increment rate of 5 counts per second.;

Copyright © 2000 IEEE. All rights reserved.

Authorized licensed use limited to: N.C. State University Libraries - Acquisitions & Discovery S. Downloaded on November 14,2023 at 14:15:01 UTC from IEEE Xplore. Restrictions apply.

Cisco v. Corrigent - IPR2023-00447
Patent Owner Corrigent Exhibit 2012-0071

Annex 30B

(normative)

GDMO and ASN.1 definitions for management

30B.2 ASN.1 module for CSMA/CD Management

Insert the following ASN.1 definitions into the ASN.1 module, in appropriate alphabetic sequence:

```
AggDataRate ::= INTEGER (0..2^32-1)      --The data rate of an Aggregation
AggID ::= INTEGER (0..2^32-1)
AggOrInd ::= BOOLEAN
AggPortID ::= INTEGER (0..2^32-1)
AggPortList ::= SEQUENCE OF AggPortID
AggPortState ::= BIT STRING (SIZE (1..8))
AggState ::= ENUMERATED {
      up            (0),                 --operational
      down          (1)                  --disabled
      }
ChurnState ::= ENUMERATED {
      noChurn       (0),                 --NO_ACTOR/PARTNER_CHURN
                                         --or ACTOR/PARTNER_CHURN_MONITOR
      churn         (1)                  --ACTOR/PARTNER_CHURN
      }
CollectorMaxDelay ::= INTEGER            --16 bit value, tens of microseconds
                                         --(max = 0.65535 seconds)
DescriptionString ::= PrintableString (SIZE 0..255))
Integer32 ::= INTEGER (0..2^32-1)        --32 bit value
KeyValue ::= INTEGER (0..2^16-1)         --16 bit value; range 0-65535
LACPActivity ::= ENUMERATED {
      active        (0),                 --Port is Active LACP
      passive       (1)                  --Port is Passive LACP
      }
LACPTimeout ::= ENUMERATED {
      short         (0),                 --Timeouts are Short
      long          (1)                  --Timeouts are Long
      }
NotificationEnable ::= ENUMERATED {
      enabled       (0),                 --Notifications enabled
      disabled      (1)                  --Notifications disabled
      }
PortNumber ::= INTEGER (0..2^16-1)
PriorityValue ::= INTEGER (0..2^16-1)    --16 bits
RxState ::= ENUMERATED {
      current       (0),
      expired       (1),
      defaulted     (2),
      initialize    (3),
      lacpDisabled  (4),
      portDisabled  (5)
      }
MuxState ::= ENUMERATED {
      detached      (0),                 --DETACHED
      waiting       (1),                 --WAITING
```


Copyright © 2000 IEEE. All rights reserved.
Authorized licensed use limited to: N.C. State University Libraries - Acquisitions & Discovery S. Downloaded on November 14,2023 at 14:15:01 UTC from IEEE Xplore. Restrictions apply.
Cisco v. Corrigent - IPR2023-00447
Patent Owner Corrigent Exhibit 2012-0072

```
attached      (2),                --ATTACHED
collecting    (3),                --COLLECTING
distributing  (4),                --DISTRIBUTING
collecting_distributing (5)       --COLLECTING_DISTRIBUTING
}
```

Copyright © 2000 IEEE. All rights reserved.

Authorized licensed use limited to: N.C. State University Libraries - Acquisitions & Discovery S. Downloaded on November 14,2023 at 14:15:01 UTC from IEEE Xplore. Restrictions apply.

Cisco v. Corrigent - IPR2023-00447
Patent Owner Corrigent Exhibit 2012-0073

Annex 30C

(normative)

SNMP MIB definitions for Link Aggregation

30C.1 Introduction

This annex defines a portion of the Management Information Base (MIB) for use with network management protocols in TCP/IP based internets. In particular it defines objects for managing the operation of the Link Aggregation sublayer, based on the specification of Link Aggregation contained in Clause 43. This annex includes an MIB module that is SNMPv2 SMI compliant.

30C.2 The SNMP Management Framework

The SNMP Management Framework presently consists of five major components

a) An overall architecture, described in RFC 2271.
b) Mechanisms for describing and naming objects and events for the purpose of management. The first version of this Structure of Management Information (SMI) is called SMIv1 and is described in RFC 1155, RFC 1212, and RFC 1215. The second version, called SMIv2, is described in RFC 1902, RFC 1903, and RFC 1904.
c) Message protocols for transferring management information. The first version of the SNMP message protocol is called SNMPv1 and is described in RFC 1157. A second version of the SNMP message protocol, which is not an Internet standards track protocol, is called SNMPv2c and is described in RFC 1901 and RFC 1906. The third version of the message protocol is called SNMPv3 and is described in RFC 1906, RFC 2272, and RFC 2274.
d) Protocol operations for accessing management information. The first set of protocol operations and associated PDU formats is described in RFC 1157. A second set of protocol operations and associated PDU formats is described in RFC 1905.
e) A set of fundamental applications described in RFC 2273 and the view-based access control mechanism described in RFC 2275.

Managed objects are accessed via a virtual information store, termed the Management Information Base or MIB. Objects in the MIB are defined using the mechanisms defined in the SMI.

This annex specifies an MIB module that is compliant to the SMIv2. An MIB conforming to the SMIv1 can be produced through the appropriate translations. The resulting translated MIB must be semantically equivalent, except where objects or events are omitted because no translation is possible (use of Counter64). Some machine-readable information in SMIv2 will be converted into textual descriptions in SMIv1 during the translation process. However, this loss of machine-readable information is not considered to change the semantics of the MIB.

30C.3 Security considerations

There are a number of management objects defined in this MIB that have a MAX-ACCESS clause of readwrite and/or read-create. Such objects may be considered sensitive or vulnerable in some network environments. The support for SET operations in a non-secure environment can have a negative effect on network operations.

Copyright © 2000 IEEE. All rights reserved.
Authorized licensed use limited to: N.C. State University Libraries - Acquisitions & Discovery S. Downloaded on November 14,2023 at 14:15:01 UTC from IEEE Xplore. Restrictions apply.
Cisco v. Corrigent - IPR2023-00447
Patent Owner Corrigent Exhibit 2012-0074

SNMPv1 by itself is not a secure environment. Even if the network itself is secure (e.g., by using IPSec), there is no control as to who on the secure network is allowed to access (read/change/create/delete) the objects in this MIB.

It is recommended that the implementors consider the security features as provided by the SNMPv3 framework. Specifically, the use of the User-based Security Model RFC 2274 and the View-based Access Control Model RFC 2275 is recommended. It then becomes a user responsibility to ensure that the SNMP entity giving access to an instance of this MIB is properly configured to give access only to those principals (users) that have legitimate rights to access(read/change/create/delete) them, as appropriate.

30C.4 Structure of the MIB

A single MIB module is defined in this annex. Objects in the MIB are arranged into groups. Each group is organized as a set of related objects. The overall structure and assignment of objects to their groups is shown in the following subclauses.

30C.4.1 Relationship to the managed objects defined in Clause 30

This subclause contains cross-references to the objects defined in Clause 30. Table 30C-1 contains cross references for the MIB objects defined in this annex. Table 30C-2 contains definitions of ifTable elements, as defined in RFC 2233, for an Aggregator. These table elements are cross referenced to the corresponding definitions in Clause 30.

Table 30C-1—Managed object cross reference table

Definition in Clause 30	MIB object
30.7.1.1.1 aAggID	ifIndex value (see RFC 2233)
30.7.1.1.4 aAggActorSystemID	dot3adAggActorSystemID
30.7.1.1.5 aAggActorSystemPriority	dot3adAggActorSystemPriority
30.7.1.1.6 aAggAggregateOrIndividual	dot3adAggAggregateOrIndividual
30.7.1.1.7 aAggActorAdminKey	dot3adAggActorAdminKey
30.7.1.1.8 aAggActorOperKey	dot3adAggActorOperKey
30.7.1.1.10 aAggPartnerSystemID	dot3adAggPartnerSystemID
30.7.1.1.11 aAggPartnerSystemPriority	dot3adAggPartnerSystemPriority
30.7.1.1.12 aAggPartnerOperKey	dot3adAggPartnerOperKey
30.7.1.1.31 aAggPortList	dot3adAggPortListTable
30.7.1.1.32 aAggCollectorMaxDelay	dot3adAggCollectorMaxDelay
30.7.2.1.1 aAggPortID	ifIndex value (see RFC 2233)
30.7.2.1.2 aAggPortActorSystemPriority	dot3adAggPortActorSystemPriority

Copyright © 2000 IEEE. All rights reserved.

Authorized licensed use limited to: N.C. State University Libraries - Acquisitions & Discovery S. Downloaded on November 14,2023 at 14:15:01 UTC from IEEE Xplore. Restrictions apply.

Cisco v. Corrigent - IPR2023-00447
Patent Owner Corrigent Exhibit 2012-0075

Table 30C-1—Managed object cross reference table (continued)

Definition in Clause 30	MIB object
30.7.2.1.3 aAggPortActorSystemID	dot3adAggPortActorSystemID
30.7.2.1.4 aAggPortActorAdminKey	dot3adAggPortActorAdminKey
30.7.2.1.5 aAggPortActorOperKey	dot3adAggPortActorOperKey
30.7.2.1.6 aAggPortPartnerAdminSystemPriority	dot3adAggPortPartnerAdminSystemPriority
30.7.2.1.7 aAggPortPartnerOperSystemPriority	dot3adAggPortPartnerOperSystemPriority
30.7.2.1.8 aAggPortPartnerAdminSystemID	dot3adAggPortPartnerAdminSystemID
30.7.2.1.9 aAggPortPartnerOperSystemID	dot3adAggPortPartnerOperSystemID
30.7.2.1.10 aAggPortPartnerAdminKey	dot3adAggPortPartnerAdminKey
30.7.2.1.11 aAggPortPartnerOperKey	dot3adAggPortPartnerOperKey
30.7.2.1.12 aAggPortSelectedAggID	dot3adAggPortSelectedAggID
30.7.2.1.13 aAggPortAttachedAggID	dot3adAggPortAttachedAggID
30.7.2.1.14 aAggPortActorPort	dot3adAggPortActorPort
30.7.2.1.15 aAggPortActorPortPriority	dot3adAggPortActorPortPriority
30.7.2.1.16 aAggPortPartnerAdminPort	dot3adAggPortPartnerAdminPort
30.7.2.1.17 aAggPortPartnerOperPort	dot3adAggPortPartnerOperPort
30.7.2.1.18 aAggPortPartnerAdminPortPriority	dot3adAggPortPartnerAdminPortPriority
30.7.2.1.19 aAggPortPartnerOperPortPriority	dot3adAggPortPartnerOperPortPriority
30.7.2.1.20 aAggPortActorAdminState	dot3adAggPortActorAdminState
30.7.2.1.21 aAggPortActorOperState	dot3adAggPortActorOperState
30.7.2.1.22 aAggPortPartnerAdminState	dot3adAggPortPartnerAdminState
30.7.2.1.23 aAggPortPartnerOperState	dot3adAggPortPartnerOperState
30.7.2.1.24 aAggPortAggregateOrIndividual	dot3adAggPortAggregateOrIndividual
30.7.3.1.1 aAggPortStatsID	ifIndex value (see RFC 2233) of the port
30.7.3.1.2 aAggPortStatsLACPDUsRx	dot3adAggPortStatsLACPDUsRx
30.7.3.1.3 aAggPortStatsMarkerPDUsRx	dot3adAggPortStatsMarkerPDUsRx
30.7.3.1.4 aAggPortStatsMarkerResponsePDUsRx	dot3adAggPortStatsMarkerResponsePDUsRx
30.7.3.1.5 aAggPortStatsUnknownRx	dot3adAggPortStatsUnknownRx

Copyright © 2000 IEEE. All rights reserved.
Authorized licensed use limited to: N.C. State University Libraries - Acquisitions & Discovery S. Downloaded on November 14,2023 at 14:15:01 UTC from IEEE Xplore. Restrictions apply.
Cisco v. Corrigent - IPR2023-00447
Patent Owner Corrigent Exhibit 2012-0076

Table 30C-1—Managed object cross reference table (continued)

Definition in Clause 30	MIB object
30.7.3.1.6 aAggPortStatsIllegalRx	dot3adAggPortStatsIllegalRx
30.7.3.1.7 aAggPortStatsLACPDUsTx	dot3adAggPortStatsLACPDUsTx
30.7.3.1.8 aAggPortStatsMarkerPDUsTx	dot3adAggPortStatsMarkerPDUsTx
30.7.3.1.9 aAggPortStatsMarkerResponsePDUsTx	dot3adAggPortStatsMarkerResponsePDUsTx
30.7.4.1.1 aAggPortDebugInformationID	ifIndex value (see RFC 2233) of the port
30.7.4.1.2 aAggPortDebugRxState	dot3adAggPortDebugRxState
30.7.4.1.3 aAggPortDebugLastRxTime	dot3adAggPortDebugLastRxTime
30.7.4.1.4 aAggPortDebugMuxState	dot3adAggPortDebugMuxState
30.7.4.1.5 aAggPortDebugMuxReason	dot3adAggPortDebugMuxReason
30.7.4.1.6 aAggPortDebugActorChurnState	dot3adAggPortDebugActorChurnState
30.7.4.1.7 aAggPortDebugPartnerChurnState	dot3adAggPortDebugPartnerChurnState
30.7.4.1.8 aAggPortDebugActorChurnCount	dot3adAggPortDebugActorChurnCount
30.7.4.1.9 aAggPortDebugPartnerChurnCount	dot3adAggPortDebugPartnerChurnCount
30.7.4.1.10 aAggPortDebugActorSyncTransitionCount	dot3adAggPortDebugActorSyncTransitionCount
30.7.4.1.11 aAggPortDebugPartnerSyncTransitionCount	dot3adAggPortDebugPartnerSyncTransitionCount
30.7.4.1.12 aAggPortDebugActorChangeCount	dot3adAggPortDebugActorChangeCount
30.7.4.1.13 aAggPortDebugPartnerChangeCount	dot3adAggPortDebugPartnerChangeCount

30C.4.2 The Aggregator Group

This group of objects, in combination with the ifTable entry for an Aggregator and the Aggregator Port List, provides the functionality of the Aggregator managed object class (30.7.1). The Aggregator Group provides the control elements necessary to configure an Aggregator, plus the statistical information necessary to monitor the behaviour of an Aggregator.

30C.4.3 The Aggregator Port List Group

This group of objects implements the functionality defined for the Aggregator Port List attribute (30.7.1.1.31).

Copyright © 2000 IEEE. All rights reserved.

Authorized licensed use limited to: N.C. State University Libraries - Acquisitions & Discovery S. Downloaded on November 14,2023 at 14:15:01 UTC from IEEE Xplore. Restrictions apply.

Cisco v. Corrigent - IPR2023-00447
Patent Owner Corrigent Exhibit 2012-0077

Table 30C-2—ifTable element definitions for an Aggregator

Object	Definition
ifIndex	A unique integer value is allocated to each Aggregator by the local System. Interpreted as defined in RFC 2233.
ifDescr	Interpreted as defined in RFC 2233 and as further refined in the definition of aAggDescription (30.7.1.1.2).
ifType	ieee8023adLag(161)[a].
ifMTU	The largest MAC Client SDU that can be carried by this Aggregator—1500 octets.
ifSpeed	The data rate of the Aggregation as defined for aAggDataRate (30.7.1.1.16).
ifPhysAddress	The individual MAC Address of the Aggregator as defined for aAggMACAddress (30.7.1.1.9).
ifAdminStatus	The administrative state of the Aggregator as defined for aAggAdminState (30.7.1.1.13).
ifOperStatus	The operational state of the Aggregator as defined for aAggOperState (30.7.1.1.14).
ifLastChange	Interpreted as defined in RFC 2233; see also the definition of aAggTimeOfLastOperChange (30.7.1.1.15).
ifInOctets	The total number of user data octets received by the aggregation, as defined for aAggOctetsRxOK (30.7.1.1.18).
ifInUcastPkts	The total number of unicast user data frames received by the aggregation. This value is calculated as the value of aAggFramesRxOK (30.7.1.1.20), less the values of aAggMulticastFramesRxOK (30.7.1.1.22) and aAggBroadcastFramesRxOK (30.7.1.1.24).
ifInNUcastPkts	Deprecated in RFC 2233.
ifInDiscards	The number of frames discarded on reception, as defined for aAggFramesDiscardedOnRx (30.7.1.1.26).
ifInErrors	The number of frames with reception errors, as defined for aAggFramesWithRxErrors (30.7.1.1.28).
ifInUnknownProtos	The number of unknown protocol frames discarded on reception, as defined for aAggUnknownProtocolFrames (30.7.1.1.29).
ifOutOctets	The total number of user data octets transmitted by the aggregation, as defined for aAggOctetsTxOK (30.7.1.1.17).
ifOutUcastPkts	The total number of unicast user data frames transmitted by the aggregation. This value is calculated as the value of aAggFramesTxOK (30.7.1.1.19), less the values of aAggMulticastFramesTxOK (30.7.1.1.21) and aAggBroadcastFramesTxOK (30.7.1.1.23).
ifOutNUcastPkts	Deprecated in RFC 2233.

Copyright © 2000 IEEE. All rights reserved.
Authorized licensed use limited to: N.C. State University Libraries - Acquisitions & Discovery S. Downloaded on November 14,2023 at 14:15:01 UTC from IEEE Xplore. Restrictions apply.
Cisco v. Corrigent - IPR2023-00447
Patent Owner Corrigent Exhibit 2012-0078

Table 30C-2—ifTable element definitions for an Aggregator (continued)

Object	Definition
ifOutDiscards	The number of frames discarded on transmission, as defined for aAggFrames-DiscardedOnTx (30.7.1.1.25).
ifOutErrors	The number of frames discarded due to transmission errors, as defined for aAggFramesWithTxErrors (30.7.1.1.27).
ifOutQLen	Deprecated in RFC 2233. Set to zero if present.
ifSpecific	Deprecated in RFC 2233. Set to { 0.0 } if present.
ifLinkUpDownTrapEnable	See the definition of aAggLinkUpDownNotificationEnable (30.7.1.1.30).
ifConnectorPresent	"FALSE."
ifHighSpeed	Set to zero.
ifName	The locally assigned textual name of the Aggregator, as defined for aAggName (30.7.1.1.3). Interpreted as defined in RFC 2233.
linkUp TRAP	See the definition of nAggLinkUpNotification (30.7.1.2.1).
linkDown TRAP	See the definition of nAggLinkDownNotification (30.7.1.2.2).

[a]Values of ifType are assigned by the Internet Assigned Numbers Authority (IANA). A directory of number assignments is maintained on their website, at URL: http://www.iana.org/numbers.html. The currently assigned ifType values can be found in the SMI Numbers (Network Management Parameters) section of that directory.

30C.4.4 The Aggregation Port Group

This group of objects provides the functionality of the Aggregation Port managed object class (30.7.2). The Aggregation Port Group provides the control elements necessary to configure a Port for Link Aggregation, plus the statistical information necessary to monitor the behavior of the port.

30C.4.5 The Aggregation Port Statistics Group

This group of objects provides the functionality of the Aggregation Port Statistics managed object class (30.7.3). The Aggregation Port Statistics Group provides additional statistical information related to LACP and Marker protocol activity on the port.

30C.4.6 The Aggregation Port Debug Group

This group of objects provides the functionality of the Aggregation Port Debug managed object class (30.7.4). The Aggregation Port Debug Group provides additional information related to the operation of LACP on the port; this information is primarily aimed at debugging the operation of the protocol and detecting fault conditions.

Copyright © 2000 IEEE. All rights reserved.

Authorized licensed use limited to: N.C. State University Libraries - Acquisitions & Discovery S. Downloaded on November 14,2023 at 14:15:01 UTC from IEEE Xplore. Restrictions apply.

Cisco v. Corrigent - IPR2023-00447
Patent Owner Corrigent Exhibit 2012-0079

30C.5 Relationship to other MIBs

It is assumed that a system implementing this MIB will also implement (at least) the "system" group defined in MIB-II defined in RFC 1213 and the "interfaces" group defined in RFC 2233.

30C.5.1 Relationship to the Interfaces MIB

RFC 2233, the Interface MIB Evolution, requires that any MIB that is an adjunct of the Interface MIB, clarify specific areas within the Interface MIB. These areas were intentionally left vague in RFC 2233 to avoid over constraining the MIB, thereby precluding management of certain media types.

Section 3.3 of RFC 2233 enumerates several areas that a media-specific MIB must clarify. Each of these areas is addressed in 30C.5.2, 30C.5.3, and 30C.5.4. The implementor is referred to RFC 2233 in order to understand the general intent of these areas.

In RFC 2233, the "interfaces" group is defined as being mandatory for all systems and contains information on an entity's interfaces, where each interface is thought of as being attached to a *subnetwork*. (Note that this term is not to be confused with *subnet,* which refers to an addressing partitioning scheme used in the Internet suite of protocols.) The term *segment* is sometimes used to refer to such a subnetwork.

Implicit in this MIB is the notion of Aggregators and Aggregation ports. Each of these Aggregators and Aggregation ports is associated with one interface of the "interfaces" group (one row in the ifTable) and each port is associated with a different interface.

Each Aggregator and Aggregation port is uniquely identified by an interface number (ifIndex). The ifIndex value assigned to a given Aggregation port is the same as the ifIndex value assigned to the MAC interface with which that Aggregation port is associated.

30C.5.2 Layering model

This annex assumes the interpretation of the Interfaces Group to be in accordance with RFC 2233, which states that the ifTable contains information on the managed resource's interfaces and that each sublayer below the internetwork layer of a network interface is considered an interface.

This annex recommends that, within an entity, aggregations that are instantiated as an entry in dot3adAggTable are also represented by an entry in ifTable.

Where an entity contains Link Aggregation entities that transmit and receive traffic to/from an aggregation, these should be represented in the ifTable as interfaces of type ieee8023adLag(161).

30C.5.3 ifStackTable

If the ifStackTable defined in RFC1573 is implemented, then

a) The relationship shown in the table has the property that an Aggregation is a higher interface relative to an Aggregation Port.
b) This relationship is read-only.

NOTE—The restriction stated here is intended to enforce a strict hierarchical relationship between Aggregations and Aggregation Ports, and to prevent those relationships from being modified. The read-only restriction does not apply to any other relationships that may be expressed in the ifStackTable.

Copyright © 2000 IEEE. All rights reserved.
Authorized licensed use limited to: N.C. State University Libraries - Acquisitions & Discovery S. Downloaded on November 14,2023 at 14:15:01 UTC from IEEE Xplore. Restrictions apply.
Cisco v. Corrigent - IPR2023-00447
Patent Owner Corrigent Exhibit 2012-0080

30C.5.4 ifRcvAddressTable

The ifRcvAddressTable contains all MAC Addresses, unicast, multicast, and broadcast, for which an interface can receive packets and forward them up to a higher layer entity for local consumption. An Aggregator has at least one such address.

30C.6 Definitions for Link Aggregation MIB

In the MIB definition[3] below, should there be any discrepancy between the DESCRIPTION text and the BEHAVIOUR DEFINED AS in the corresponding definition in Clause 30, the definition in Clause 30 shall take precedence.

NOTES

1—As this text goes to publication it is believed that the identifier “802dot3” i.e., in the context 802dot3 (10006), violates ASN rules ref ASN 1 (X.208 Section 8.3) and will therefore produce a syntax error when compiled. IEEE is taking action to change this identifier to “ieee802dot3” as quickly as possible.

2—The ASCII for 30C.6 is available from http://grouper.ieee.org/groups/802/3/publication/index.html.[4]

```
IEEE8023-LAG-MIB DEFINITIONS ::= BEGIN


-- ------------------------------------------------------------
-- IEEE 802.3ad MIB
-- ------------------------------------------------------------


IMPORTS
    MODULE-IDENTITY, OBJECT-TYPE, Counter32, TimeTicks
        FROM SNMPv2-SMI
    DisplayString, MacAddress, TEXTUAL-CONVENTION, TruthValue
        FROM SNMPv2-TC
    MODULE-COMPLIANCE, OBJECT-GROUP
        FROM SNMPv2-CONF
    InterfaceIndex
        FROM IF-MIB
    PortList
        FROM Q-BRIDGE-MIB
    ;


lagMIB MODULE-IDENTITY
    LAST-UPDATED "200006270000Z"
    ORGANIZATION "IEEE 802.3 Working Group"
    CONTACT-INFO
        " stds-802-3-trunking@majordomo.ieee.org"
    DESCRIPTION
        "The Link Aggregation module for managing IEEE Std
        802.3ad."
    ::= { iso(1) member-body(2) us(840) 802dot3(10006)
          snmpmibs(300) 43 }


lagMIBObjects OBJECT IDENTIFIER ::= { lagMIB 1 }
```

[3]MIB definitions are available at http://www.ietf.org/.

[4]*Copyright release for SNMP MIB:* Users of this standard may freely reproduce the SNMP MIB in this annex so it can be used for its intended purpose.

Copyright © 2000 IEEE. All rights reserved.

Authorized licensed use limited to: N.C. State University Libraries - Acquisitions & Discovery S. Downloaded on November 14,2023 at 14:15:01 UTC from IEEE Xplore. Restrictions apply.

Cisco v. Corrigent - IPR2023-00447
Patent Owner Corrigent Exhibit 2012-0081

```
-- ------------------------------------------------------------
-- Textual Conventions
-- ------------------------------------------------------------


LacpKey ::= TEXTUAL-CONVENTION
    STATUS       current
    DESCRIPTION
        "The Actor or Partner Key value."
    SYNTAX      INTEGER (0..65535)


LacpState ::= TEXTUAL-CONVENTION
    STATUS      current
    DESCRIPTION
        "The Actor and Partner State values from the LACPDU."
    SYNTAX      BITS {
                    lacpActivity(0),
                    lacpTimeout(1),
                    aggregation(2),
                    synchronization(3),
                    collecting(4),
                    distributing(5),
                    defaulted(6),
                    expired(7)
                }


ChurnState ::= TEXTUAL-CONVENTION
    STATUS       current
    DESCRIPTION
        "The state of the Churn Detection machine."
    SYNTAX      INTEGER {
                    noChurn(1),
                    churn(2),
                    churnMonitor(3)
                }


-- ------------------------------------------------------------


-- ------------------------------------------------------------
-- groups in the LAG MIB
-- ------------------------------------------------------------


dot3adAgg OBJECT IDENTIFIER ::= { lagMIBObjects 1 }
dot3adAggPort OBJECT IDENTIFIER ::= { lagMIBObjects 2 }


-- ------------------------------------------------------------

-- ------------------------------------------------------------
-- The Tables Last Changed Object
-- ------------------------------------------------------------

dot3adTablesLastChanged OBJECT-TYPE
```


Copyright © 2000 IEEE. All rights reserved.
Authorized licensed use limited to: N.C. State University Libraries - Acquisitions & Discovery S. Downloaded on November 14,2023 at 14:15:01 UTC from IEEE Xplore. Restrictions apply.
Cisco v. Corrigent - IPR2023-00447
Patent Owner Corrigent Exhibit 2012-0082

```
    SYNTAX      TimeTicks
    MAX-ACCESS read-only
    STATUS      current
    DESCRIPTION
        "This object indicates the time of the most recent
        change to the dot3adAggTable, dot3adAggPortListTable, or
        dot3adAggPortTable."
::= { lagMIBObjects 3 }

-- ------------------------------------------------------------
-- The Aggregator Configuration Table
-- ------------------------------------------------------------


dot3adAggTable OBJECT-TYPE
    SYNTAX      SEQUENCE OF Dot3adAggEntry
    MAX-ACCESS  not-accessible
    STATUS      current
    DESCRIPTION
        "A table that contains information about every
        Aggregator that is associated with this System."
    REFERENCE
        "IEEE 802.3 Subclause 30.7.1"
    ::= { dot3adAgg 1 }


dot3adAggEntry OBJECT-TYPE
    SYNTAX      Dot3adAggEntry
    MAX-ACCESS  not-accessible
    STATUS      current
    DESCRIPTION
        "A list of the Aggregator parameters. This is indexed
        by the ifIndex of the Aggregator."
    INDEX { dot3adAggIndex }
    ::= { dot3adAggTable 1 }


Dot3adAggEntry ::=
    SEQUENCE {
        dot3adAggIndex
            InterfaceIndex,
        dot3adAggMACAddress
            MacAddress,
        dot3adAggActorSystemPriority
            INTEGER,
        dot3adAggActorSystemID
            MacAddress,
        dot3adAggAggregateOrIndividual
            TruthValue,
        dot3adAggActorAdminKey
            LacpKey,
        dot3adAggActorOperKey
            LacpKey,
        dot3adAggPartnerSystemID
            MacAddress,
        dot3adAggPartnerSystemPriority
            INTEGER,
        dot3adAggPartnerOperKey
            LacpKey,
        dot3adAggCollectorMaxDelay
```

Copyright © 2000 IEEE. All rights reserved.

Authorized licensed use limited to: N.C. State University Libraries - Acquisitions & Discovery S. Downloaded on November 14,2023 at 14:15:01 UTC from IEEE Xplore. Restrictions apply.

Cisco v. Corrigent - IPR2023-00447
Patent Owner Corrigent Exhibit 2012-0083

```
            INTEGER
    }


dot3adAggIndex OBJECT-TYPE
    SYNTAX       InterfaceIndex
    MAX-ACCESS   not-accessible
    STATUS       current
    DESCRIPTION
        "The unique identifier allocated to this Aggregator by
        the local System.  This attribute identifies an
        Aggregator instance among the subordinate managed
        objects of the containing object.
        This value is read-only."
    REFERENCE
        "IEEE 802.3 Subclause 30.7.1.1.1"
    ::= { dot3adAggEntry 1 }


dot3adAggMACAddress OBJECT-TYPE
    SYNTAX       MacAddress
    MAX-ACCESS   read-only
    STATUS       current
    DESCRIPTION
        "A 6-octet read-only value carrying the individual
       MAC address assigned to the Aggregator."
    REFERENCE
        "IEEE 802.3 Subclause 30.7.1.1.9"
    ::= { dot3adAggEntry 2 }


dot3adAggActorSystemPriority OBJECT-TYPE
    SYNTAX       INTEGER (0..65535)
    MAX-ACCESS   read-write
    STATUS       current
    DESCRIPTION
        "A 2-octet read-write value indicating the priority
        value associated with the Actor's System ID."
    REFERENCE
        "IEEE 802.3 Subclause 30.7.1.1.5"
    ::= { dot3adAggEntry 3 }


dot3adAggActorSystemID OBJECT-TYPE
    SYNTAX       MacAddress
    MAX-ACCESS   read-only
    STATUS       current
    DESCRIPTION
        "A 6-octet read-write MAC address value used as a unique
        identifier for the System that contains this Aggregator.
        NOTE-From the perspective of the Link Aggregation
        mechanisms described in Clause 43, only a single
        combination of Actor's System ID and System Priority are
        considered, and no distinction is made between the
        values of these parameters for an Aggregator and the
        port(s) that are associated with it; i.e., the protocol
        is described in terms of the operation of aggregation
        within a single System. However, the managed objects
        provided for the Aggregator and the port both allow
        management of these parameters. The result of this is to
```


Copyright © 2000 IEEE. All rights reserved.
Authorized licensed use limited to: N.C. State University Libraries - Acquisitions & Discovery S. Downloaded on November 14,2023 at 14:15:01 UTC from IEEE Xplore. Restrictions apply.
Cisco v. Corrigent - IPR2023-00447
Patent Owner Corrigent Exhibit 2012-0084

```
        permit a single piece of equipment to be configured by
        management to contain more than one System from the
        point of view of the operation of Link Aggregation. This
        may be of particular use in the configuration of
        equipment that has limited aggregation capability (see
        43.6)."
    REFERENCE
        "IEEE 802.3 Subclause 30.7.1.1.4"
    ::= { dot3adAggEntry 4 }


dot3adAggAggregateOrIndividual OBJECT-TYPE
    SYNTAX       TruthValue
    MAX-ACCESS   read-only
    STATUS       current
    DESCRIPTION
        "A read-only Boolean value indicating whether the
        Aggregator represents an Aggregate (`TRUE') or
        an Individual link (`FALSE')."
    REFERENCE
        "IEEE 802.3 Subclause 30.7.1.1.6"
    ::= { dot3adAggEntry 5 }


dot3adAggActorAdminKey OBJECT-TYPE
    SYNTAX       LacpKey
    MAX-ACCESS   read-write
    STATUS       current
    DESCRIPTION
        "The current administrative value of the Key for the
        Aggregator. The administrative Key value may differ from
        the operational Key value for the reasons discussed in
        43.6.2. This is a 16-bit, read-write value. The meaning
        of particular Key values is of local significance."
    REFERENCE
        "IEEE 802.3 Subclause 30.7.1.1.7"
    ::= { dot3adAggEntry 6 }


dot3adAggActorOperKey OBJECT-TYPE
    SYNTAX       LacpKey
    MAX-ACCESS   read-only
    STATUS       current
    DESCRIPTION
        "The current operational value of the Key for the
        Aggregator. The administrative Key value may differ from
        the operational Key value for the reasons discussed in
        43.6.2.  This is a 16-bit read-only value. The meaning
        of particular Key values is of local significance."
    REFERENCE
        "IEEE 802.3 Subclause 30.7.1.1.8"
    ::= { dot3adAggEntry 7 }


dot3adAggPartnerSystemID OBJECT-TYPE
    SYNTAX       MacAddress
    MAX-ACCESS   read-only
    STATUS       current
    DESCRIPTION
        "A 6-octet read-only MAC address value consisting of the
```

Copyright © 2000 IEEE. All rights reserved.

Authorized licensed use limited to: N.C. State University Libraries - Acquisitions & Discovery S. Downloaded on November 14,2023 at 14:15:01 UTC from IEEE Xplore. Restrictions apply.

Cisco v. Corrigent - IPR2023-00447
Patent Owner Corrigent Exhibit 2012-0085

```
        unique identifier for the current protocol Partner of
        this Aggregator. A value of zero indicates that there is
        no known Partner. If the aggregation is manually
        configured, this System ID value will be a value
        assigned by the local System."
    REFERENCE
        "IEEE 802.3 Subclause 30.7.1.1.10"
    ::= { dot3adAggEntry 8 }


dot3adAggPartnerSystemPriority OBJECT-TYPE
    SYNTAX       INTEGER (0..65535)
    MAX-ACCESS   read-only
    STATUS       current
    DESCRIPTION
        "A 2-octet read-only value that indicates the priority
        value associated with the Partner's System ID. If the
        aggregation is manually configured, this System Priority
        value will be a value assigned by the local System."
    REFERENCE
        "IEEE 802.3 Subclause 30.7.1.1.11"
    ::= { dot3adAggEntry 9 }


dot3adAggPartnerOperKey OBJECT-TYPE
    SYNTAX       LacpKey
    MAX-ACCESS   read-only
    STATUS       current
    DESCRIPTION
        "The current operational value of the Key for the
        Aggregator's current protocol Partner. This is a 16-bit
        read-only value. If the aggregation is manually
        configured, this Key value will be a value assigned by
        the local System."
    REFERENCE
        "IEEE 802.3 Subclause 30.7.1.1.12"
    ::= { dot3adAggEntry 10 }


dot3adAggCollectorMaxDelay OBJECT-TYPE
    SYNTAX       INTEGER (0..65535)
    MAX-ACCESS   read-write
    STATUS       current
    DESCRIPTION
        "The value of this 16-bit read-write attribute defines
        the maximum delay, in tens of microseconds, that may be
        imposed by the Frame Collector between receiving a frame
        from an Aggregator Parser, and either delivering the
        frame to its MAC Client or discarding the frame (see
        43.2.3.1.1)."
    REFERENCE
        "IEEE 802.3 Subclause 30.7.1.1.32"
    ::= { dot3adAggEntry 11 }


-- ------------------------------------------------------------
-- The Aggregation Port List Table
-- ------------------------------------------------------------
```


Copyright © 2000 IEEE. All rights reserved.
Authorized licensed use limited to: N.C. State University Libraries - Acquisitions & Discovery S. Downloaded on November 14,2023 at 14:15:01 UTC from IEEE Xplore. Restrictions apply.
Cisco v. Corrigent - IPR2023-00447
Patent Owner Corrigent Exhibit 2012-0086

```
dot3adAggPortListTable OBJECT-TYPE
    SYNTAX      SEQUENCE OF Dot3adAggPortListEntry
    MAX-ACCESS  not-accessible
    STATUS      current
    DESCRIPTION
        "A table that contains a list of all the ports
        associated with each Aggregator."
    REFERENCE
        "IEEE 802.3 Subclause 30.7.1.1.30"
    ::= { dot3adAgg 2 }


dot3adAggPortListEntry OBJECT-TYPE
    SYNTAX      Dot3adAggPortListEntry
    MAX-ACCESS  not-accessible
    STATUS      current
    DESCRIPTION
        "A list of the ports associated with a given Aggregator.
        This is indexed by the ifIndex of the Aggregator."
    INDEX { dot3adAggIndex }
    ::= { dot3adAggPortListTable 1 }


Dot3adAggPortListEntry ::=
    SEQUENCE {
        dot3adAggPortListPorts
            PortList
    }


dot3adAggPortListPorts OBJECT-TYPE
    SYNTAX      PortList
    MAX-ACCESS  read-only
    STATUS      current
    DESCRIPTION
        "The complete set of ports currently associated with
        this Aggregator.  Each bit set in this list represents
        an Actor Port member of this Link Aggregation."
    REFERENCE
        "IEEE 802.3 Subclause 30.7.1.1.30"
    ::= { dot3adAggPortListEntry 1 }


-- ------------------------------------------------------------
-- The Aggregation Port Table
-- ------------------------------------------------------------


dot3adAggPortTable OBJECT-TYPE
    SYNTAX      SEQUENCE OF Dot3adAggPortEntry
    MAX-ACCESS  not-accessible
    STATUS      current
    DESCRIPTION
        "A table that contains Link Aggregation Control
        configuration information about every
        Aggregation Port associated with this device.
        A row appears in this table for each physical port."
    REFERENCE
        "IEEE 802.3 Subclause 30.7.2"
    ::= { dot3adAggPort 1 }
```

Copyright © 2000 IEEE. All rights reserved.

Authorized licensed use limited to: N.C. State University Libraries - Acquisitions & Discovery S. Downloaded on November 14,2023 at 14:15:01 UTC from IEEE Xplore. Restrictions apply.

Cisco v. Corrigent - IPR2023-00447
Patent Owner Corrigent Exhibit 2012-0087

```
dot3adAggPortEntry OBJECT-TYPE
    SYNTAX      Dot3adAggPortEntry
    MAX-ACCESS  not-accessible
    STATUS      current
    DESCRIPTION
        "A list of Link Aggregation Control configuration
        parameters for each Aggregation Port on this device."
    INDEX      { dot3adAggPortIndex }
    ::= { dot3adAggPortTable 1 }


Dot3adAggPortEntry ::=
    SEQUENCE {
        dot3adAggPortIndex
            InterfaceIndex,
        dot3adAggPortActorSystemPriority
            INTEGER,
        dot3adAggPortActorSystemID
            MacAddress,
        dot3adAggPortActorAdminKey
            LacpKey,
        dot3adAggPortActorOperKey
            LacpKey,
        dot3adAggPortPartnerAdminSystemPriority
            INTEGER,
        dot3adAggPortPartnerOperSystemPriority
            INTEGER,
        dot3adAggPortPartnerAdminSystemID
            MacAddress,
        dot3adAggPortPartnerOperSystemID
            MacAddress,
        dot3adAggPortPartnerAdminKey
            LacpKey,
        dot3adAggPortPartnerOperKey
            LacpKey,
        dot3adAggPortSelectedAggID
            InterfaceIndex,
        dot3adAggPortAttachedAggID
            InterfaceIndex,
        dot3adAggPortActorPort
            INTEGER,
        dot3adAggPortActorPortPriority
            INTEGER,
        dot3adAggPortPartnerAdminPort
            INTEGER,
        dot3adAggPortPartnerOperPort
            INTEGER,
        dot3adAggPortPartnerAdminPortPriority
            INTEGER,
        dot3adAggPortPartnerOperPortPriority
            INTEGER,
        dot3adAggPortActorAdminState
            LacpState,
        dot3adAggPortActorOperState
            LacpState,
        dot3adAggPortPartnerAdminState
            LacpState,
        dot3adAggPortPartnerOperState
```


Copyright © 2000 IEEE. All rights reserved.
Authorized licensed use limited to: N.C. State University Libraries - Acquisitions & Discovery S. Downloaded on November 14,2023 at 14:15:01 UTC from IEEE Xplore. Restrictions apply.
Cisco v. Corrigent - IPR2023-00447
Patent Owner Corrigent Exhibit 2012-0088

```
            LacpState,
        dot3adAggPortAggregateOrIndividual
            TruthValue
    }


dot3adAggPortIndex OBJECT-TYPE
    SYNTAX       InterfaceIndex
    MAX-ACCESS   not-accessible
    STATUS       current
    DESCRIPTION
        "The ifIndex of the port"
    REFERENCE
        "IEEE 802.3 Subclause 30.7.2.1.1"
    ::= { dot3adAggPortEntry 1 }


dot3adAggPortActorSystemPriority OBJECT-TYPE
    SYNTAX       INTEGER (0..255)
    MAX-ACCESS   read-write
    STATUS       current
    DESCRIPTION
        "A 2-octet read-write value used to define the priority
        value associated with the Actor's System ID."
    REFERENCE
        "IEEE 802.3 Subclause 30.7.2.1.2"
    ::= { dot3adAggPortEntry 2 }


dot3adAggPortActorSystemID OBJECT-TYPE
    SYNTAX       MacAddress
    MAX-ACCESS   read-only
    STATUS       current
    DESCRIPTION
        "A 6-octet read-only MAC address value that defines the
        value of the System ID for the System that contains this
        Aggregation Port."
    REFERENCE
        "IEEE 802.3 Subclause 30.7.2.1.3"
    ::= { dot3adAggPortEntry 3 }


dot3adAggPortActorAdminKey OBJECT-TYPE
    SYNTAX       LacpKey
    MAX-ACCESS   read-write
    STATUS       current
    DESCRIPTION
        "The current administrative value of the Key for the
        Aggregation Port. This is a 16-bit read-write value.
        The meaning of particular Key values is of local
        significance."
    REFERENCE
        "IEEE 802.3 Subclause 30.7.2.1.4"
    ::= { dot3adAggPortEntry 4 }


dot3adAggPortActorOperKey OBJECT-TYPE
    SYNTAX       LacpKey
    MAX-ACCESS   read-write
    STATUS       current
```

Copyright © 2000 IEEE. All rights reserved.

Authorized licensed use limited to: N.C. State University Libraries - Acquisitions & Discovery S. Downloaded on November 14,2023 at 14:15:01 UTC from IEEE Xplore. Restrictions apply.

Cisco v. Corrigent - IPR2023-00447
Patent Owner Corrigent Exhibit 2012-0089

```
    DESCRIPTION
        "The current operational value of the Key for the
        Aggregation Port. This is a 16-bit read-only value.
        The meaning of particular Key values is of local
        significance."
    REFERENCE
        "IEEE 802.3 Subclause 30.7.2.1.5"
    ::= { dot3adAggPortEntry 5 }


dot3adAggPortPartnerAdminSystemPriority OBJECT-TYPE
    SYNTAX       INTEGER (0..255)
    MAX-ACCESS   read-write
    STATUS       current
    DESCRIPTION
        "A 2-octet read-write value used to define the
        administrative value of priority associated with the
        Partner's System ID. The assigned value is used, along
        with the value of aAggPortPartnerAdminSystemID,
        aAggPortPartnerAdminKey, aAggPortPartnerAdminPort, and
        aAggPortPartnerAdminPortPriority, in order to achieve
        manually configured aggregation."
    REFERENCE
        "IEEE 802.3 Subclause 30.7.2.1.6"
    ::= { dot3adAggPortEntry 6 }


dot3adAggPortPartnerOperSystemPriority OBJECT-TYPE
    SYNTAX       INTEGER (0..255)
    MAX-ACCESS   read-only
    STATUS       current
    DESCRIPTION
        "A 2-octet read-only value indicating the operational
        value of priority associated with the Partner's System
        ID. The value of this attribute may contain the manually
        configured value carried in
        aAggPortPartnerAdminSystemPriority if there is no
        protocol Partner."
    REFERENCE
        "IEEE 802.3 Subclause 30.7.2.1.7"
    ::= { dot3adAggPortEntry 7 }


dot3adAggPortPartnerAdminSystemID OBJECT-TYPE
    SYNTAX       MacAddress
    MAX-ACCESS   read-write
    STATUS       current
    DESCRIPTION
        "A 6-octet read-write MACAddress value representing the
        administrative value of the Aggregation Port's protocol
        Partner's System ID. The assigned value is used, along
        with the value of aAggPortPartnerAdminSystemPriority,
        aAggPortPartnerAdminKey, aAggPortPartnerAdminPort, and
        aAggPortPartnerAdminPortPriority, in order to achieve
        manually configured aggregation."
    REFERENCE
        "IEEE 802.3 Subclause 30.7.2.1.8"
    ::= { dot3adAggPortEntry 8 }
```


Copyright © 2000 IEEE. All rights reserved.
Authorized licensed use limited to: N.C. State University Libraries - Acquisitions & Discovery S. Downloaded on November 14,2023 at 14:15:01 UTC from IEEE Xplore. Restrictions apply.
Cisco v. Corrigent - IPR2023-00447
Patent Owner Corrigent Exhibit 2012-0090

```
dot3adAggPortPartnerOperSystemID OBJECT-TYPE
    SYNTAX       MacAddress
    MAX-ACCESS   read-only
    STATUS       current
    DESCRIPTION
        "A 6-octet read-only MACAddress value representing the
        current value of the Aggregation Port's protocol
        Partner's System ID. A value of zero indicates that
        there is no known protocol Partner. The value of this
        attribute may contain the manually configured value
        carried in aAggPortPartnerAdminSystemID if there is no
        protocol Partner."
    REFERENCE
        "IEEE 802.3 Subclause 30.7.2.1.9"
    ::= { dot3adAggPortEntry 9 }


dot3adAggPortPartnerAdminKey OBJECT-TYPE
    SYNTAX       LacpKey
    MAX-ACCESS   read-write
    STATUS       current
    DESCRIPTION
        "The current administrative value of the Key for the
        protocol Partner. This is a 16-bit read-write value.
        The assigned value is used, along with the value of
        aAggPortPartnerAdminSystemPriority,
        aAggPortPartnerAdminSystemID, aAggPortPartnerAdminPort,
        and aAggPortPartnerAdminPortPriority, in order to
        achieve manually configured aggregation."
    REFERENCE
        "IEEE 802.3 Subclause 30.7.2.1.10"
    ::= { dot3adAggPortEntry 10 }


dot3adAggPortPartnerOperKey OBJECT-TYPE
    SYNTAX       LacpKey
    MAX-ACCESS   read-only
    STATUS       current
    DESCRIPTION
        "The current operational value of the Key for the
        protocol Partner. The value of this attribute may
        contain the manually configured value carried in
        aAggPortPartnerAdminKey if there is no protocol Partner.
        This is a 16-bit read-only value."
    REFERENCE
        "IEEE 802.3 Subclause 30.7.2.1.11"
    ::= { dot3adAggPortEntry 11 }


dot3adAggPortSelectedAggID OBJECT-TYPE
    SYNTAX       InterfaceIndex
    MAX-ACCESS   read-only
    STATUS       current
    DESCRIPTION
        "The identifier value of the Aggregator that this
        Aggregation Port has currently selected. Zero indicates
        that the Aggregation Port has not selected an
        Aggregator, either because it is in the process of
        detaching from an Aggregator or because there is no
        suitable Aggregator available for it to select.
```

Copyright © 2000 IEEE. All rights reserved.

Authorized licensed use limited to: N.C. State University Libraries - Acquisitions & Discovery S. Downloaded on November 14,2023 at 14:15:01 UTC from IEEE Xplore. Restrictions apply.

Cisco v. Corrigent - IPR2023-00447
Patent Owner Corrigent Exhibit 2012-0091

```
        This value is read-only."
    REFERENCE
        "IEEE 802.3 Subclause 30.7.2.1.12"
    ::= { dot3adAggPortEntry 12 }


dot3adAggPortAttachedAggID OBJECT-TYPE
    SYNTAX       InterfaceIndex
    MAX-ACCESS   read-only
    STATUS       current
    DESCRIPTION
        "The identifier value of the Aggregator that this
        Aggregation Port is currently attached to. Zero
        indicates that the Aggregation Port is not currently
        attached to an Aggregator.  This value is read-only."
    REFERENCE
        "IEEE 802.3 Subclause 30.7.2.1.13"
    ::= { dot3adAggPortEntry 13 }


dot3adAggPortActorPort OBJECT-TYPE
    SYNTAX       INTEGER (0..65535)
    MAX-ACCESS   read-only
    STATUS       current
    DESCRIPTION
        "The port number locally assigned to the Aggregation
        Port. The port number is communicated in LACPDUs as the
        Actor_Port. This value is read-only."
    REFERENCE
        "IEEE 802.3 Subclause 30.7.2.1.14"
    ::= { dot3adAggPortEntry 14 }


dot3adAggPortActorPortPriority OBJECT-TYPE
    SYNTAX       INTEGER (0..255)
    MAX-ACCESS   read-write
    STATUS       current
    DESCRIPTION
        "The priority value assigned to this Aggregation Port.
        This 16-bit value is read-write."
    REFERENCE
        "IEEE 802.3 Subclause 30.7.2.1.15"
    ::= { dot3adAggPortEntry 15 }


dot3adAggPortPartnerAdminPort OBJECT-TYPE
    SYNTAX       INTEGER (0..65535)
    MAX-ACCESS   read-write
    STATUS       current
    DESCRIPTION
        "The current administrative value of the port number for
        the protocol Partner. This is a 16-bit read-write value.
        The assigned value is used, along with the value of
        aAggPortPartnerAdminSystemPriority,
        aAggPortPartnerAdminSystemID, aAggPortPartnerAdminKey,
        and aAggPortPartnerAdminPortPriority, in order to
        achieve manually configured aggregation."
    REFERENCE
        "IEEE 802.3 Subclause 30.7.2.1.16"
    ::= { dot3adAggPortEntry 16 }
```


Copyright © 2000 IEEE. All rights reserved.
Authorized licensed use limited to: N.C. State University Libraries - Acquisitions & Discovery S. Downloaded on November 14,2023 at 14:15:01 UTC from IEEE Xplore. Restrictions apply.
Cisco v. Corrigent - IPR2023-00447
Patent Owner Corrigent Exhibit 2012-0092

```
dot3adAggPortPartnerOperPort OBJECT-TYPE
    SYNTAX       INTEGER (0..65535)
    MAX-ACCESS   read-only
    STATUS       current
    DESCRIPTION
        "The operational port number assigned to this
        Aggregation Port by the Aggregation Port's protocol
        Partner. The value of this attribute may contain the
        manually configured value carried in
        aAggPortPartnerAdminPort if there is no protocol
        Partner. This 16-bit value is read-only."
    REFERENCE
        "IEEE 802.3 Subclause 30.7.2.1.17"
    ::= { dot3adAggPortEntry 17 }


dot3adAggPortPartnerAdminPortPriority OBJECT-TYPE
    SYNTAX       INTEGER (0..255)
    MAX-ACCESS   read-write
    STATUS       current
    DESCRIPTION
        "The current administrative value of the port priority
        for the protocol Partner. This is a 16-bit read-write
        value. The assigned value is used, along with the value
        of aAggPortPartnerAdminSystemPriority,
        aAggPortPartnerAdminSystemID, aAggPortPartnerAdminKey,
        and aAggPortPartnerAdminPort, in order to achieve
        manually configured aggregation."
    REFERENCE
        "IEEE 802.3 Subclause 30.7.2.1.18"
    ::= { dot3adAggPortEntry 18 }


dot3adAggPortPartnerOperPortPriority OBJECT-TYPE
    SYNTAX       INTEGER (0..255)
    MAX-ACCESS   read-only
    STATUS       current
    DESCRIPTION
        "The priority value assigned to this Aggregation Port by
        the Partner. The value of this attribute may contain the
        manually configured value carried in
        aAggPortPartnerAdminPortPriority if there is no protocol
        Partner. This 16-bit value is read-only."
    REFERENCE
        "IEEE 802.3 Subclause 30.7.2.1.19"
    ::= { dot3adAggPortEntry 19 }


dot3adAggPortActorAdminState OBJECT-TYPE
    SYNTAX       LacpState
    MAX-ACCESS   read-write
    STATUS       current
    DESCRIPTION
        "A string of 8 bits, corresponding to the administrative
        values of Actor_State (43.4.2) as transmitted by the
        Actor in LACPDUs. The first bit corresponds to bit 0 of
        Actor_State (LACP_Activity),
        the second bit corresponds to bit 1 (LACP_Timeout),
```

Copyright © 2000 IEEE. All rights reserved.

Authorized licensed use limited to: N.C. State University Libraries - Acquisitions & Discovery S. Downloaded on November 14,2023 at 14:15:01 UTC from IEEE Xplore. Restrictions apply.

Cisco v. Corrigent - IPR2023-00447
Patent Owner Corrigent Exhibit 2012-0093

```
        the third bit corresponds to bit 2 (Aggregation),
        the fourth bit corresponds to bit 3 (Synchronization),
        the fifth bit corresponds to bit 4 (Collecting),
        the sixth bit corresponds to bit 5 (Distributing),
        the seventh bit corresponds to bit 6 (Defaulted),
        and the eighth bit corresponds to bit 7 (Expired).
        These values allow administrative control over the
        values of LACP_Activity, LACP_Timeout and Aggregation.
        This attribute value is read-write."
    REFERENCE
        "IEEE 802.3 Subclause 30.7.2.1.20"
    ::= { dot3adAggPortEntry 20 }


dot3adAggPortActorOperState OBJECT-TYPE
    SYNTAX       LacpState
    MAX-ACCESS   read-only
    STATUS       current
    DESCRIPTION
        "A string of 8 bits, corresponding to the current
        operational values of Actor_State as transmitted by the
        Actor in LACPDUs. The bit allocations are as defined in
        30.7.2.1.20. This attribute value is read-only."
    REFERENCE
        "IEEE 802.3 Subclause 30.7.2.1.21"
    ::= { dot3adAggPortEntry 21 }


dot3adAggPortPartnerAdminState OBJECT-TYPE
    SYNTAX       LacpState
    MAX-ACCESS   read-write
    STATUS       current
    DESCRIPTION
        "A string of 8 bits, corresponding to the current
        administrative value of Actor_State for the protocol
        Partner. The bit allocations are as defined in
        30.7.2.1.20. This attribute value is read-write. The
        assigned value is used in order to achieve manually
        configured aggregation."
    REFERENCE
        "IEEE 802.3 Subclause 30.7.2.1.22"
    ::= { dot3adAggPortEntry 22 }


dot3adAggPortPartnerOperState OBJECT-TYPE
    SYNTAX       LacpState
    MAX-ACCESS   read-only
    STATUS       current
    DESCRIPTION
        "A string of 8 bits, corresponding to the current values
        of Actor_State in the most recently received LACPDU
        transmitted by the protocol Partner. The bit allocations
        are as defined in 30.7.2.1.20. In the absence of an
        active protocol Partner, this value may reflect the
        manually configured value aAggPortPartnerAdminState.
        This attribute value is read-only."
    REFERENCE
        "IEEE 802.3 Subclause 30.7.2.1.23"
    ::= { dot3adAggPortEntry 23 }
```


Copyright © 2000 IEEE. All rights reserved.
Authorized licensed use limited to: N.C. State University Libraries - Acquisitions & Discovery S. Downloaded on November 14,2023 at 14:15:01 UTC from IEEE Xplore. Restrictions apply.
Cisco v. Corrigent - IPR2023-00447
Patent Owner Corrigent Exhibit 2012-0094

```
dot3adAggPortAggregateOrIndividual OBJECT-TYPE
    SYNTAX       TruthValue
    MAX-ACCESS   read-only
    STATUS       current
    DESCRIPTION
        "A read-only Boolean value indicating whether the
        Aggregation Port is able to Aggregate (`TRUE') or is
        only able to operate as an Individual link (`FALSE')."
    REFERENCE
        "IEEE 802.3 Subclause 30.7.2.1.24"
    ::= { dot3adAggPortEntry 24 }


-- ------------------------------------------------------------
-- LACP Statistics Table
-- ------------------------------------------------------------


dot3adAggPortStatsTable OBJECT-TYPE
    SYNTAX      SEQUENCE OF Dot3adAggPortStatsEntry
    MAX-ACCESS  not-accessible
    STATUS      current
    DESCRIPTION
        "A table that contains Link Aggregation information
        about every port that is associated with this device.
        A row appears in this table for each physical port."
    REFERENCE
        "IEEE 802.3 Subclause 30.7.3"
    ::= { dot3adAggPort 2 }


dot3adAggPortStatsEntry OBJECT-TYPE
    SYNTAX      Dot3adAggPortStatsEntry
    MAX-ACCESS  not-accessible
    STATUS      current
    DESCRIPTION
        "A list of Link Aggregation Control Protocol statistics
        for each port on this device."
    INDEX { dot3adAggPortIndex }
    ::= { dot3adAggPortStatsTable 1 }


Dot3adAggPortStatsEntry ::=
    SEQUENCE {
        dot3adAggPortStatsLACPDUsRx
            Counter32,
        dot3adAggPortStatsMarkerPDUsRx
            Counter32,
        dot3adAggPortStatsMarkerResponsePDUsRx
            Counter32,
        dot3adAggPortStatsUnknownRx
            Counter32,
        dot3adAggPortStatsIllegalRx
            Counter32,
        dot3adAggPortStatsLACPDUsTx
            Counter32,
        dot3adAggPortStatsMarkerPDUsTx
            Counter32,
        dot3adAggPortStatsMarkerResponsePDUsTx
```

Copyright © 2000 IEEE. All rights reserved.

Authorized licensed use limited to: N.C. State University Libraries - Acquisitions & Discovery S. Downloaded on November 14,2023 at 14:15:01 UTC from IEEE Xplore. Restrictions apply.

Cisco v. Corrigent - IPR2023-00447
Patent Owner Corrigent Exhibit 2012-0095

```
            Counter32
    }


dot3adAggPortStatsLACPDUsRx OBJECT-TYPE
    SYNTAX       Counter32
    MAX-ACCESS   read-only
    STATUS       current
    DESCRIPTION
        "The number of valid LACPDUs received on this
        Aggregation Port. This value is read-only."
    REFERENCE
        "IEEE 802.3 Subclause 30.7.3.1.2"
    ::= { dot3adAggPortStatsEntry 1 }


dot3adAggPortStatsMarkerPDUsRx OBJECT-TYPE
    SYNTAX       Counter32
    MAX-ACCESS   read-only
    STATUS       current
    DESCRIPTION
        "The number of valid Marker PDUs received on this
        Aggregation Port. This value is read-only."
    REFERENCE
        "IEEE 802.3 Subclause 30.7.3.1.3"
    ::= { dot3adAggPortStatsEntry 2 }


dot3adAggPortStatsMarkerResponsePDUsRx OBJECT-TYPE
    SYNTAX       Counter32
    MAX-ACCESS   read-only
    STATUS       current
    DESCRIPTION
        "The number of valid Marker Response PDUs received on
        this Aggregation Port. This value is read-only."
    REFERENCE
        "IEEE 802.3 Subclause 30.7.3.1.4"
    ::= { dot3adAggPortStatsEntry 3 }


dot3adAggPortStatsUnknownRx OBJECT-TYPE
    SYNTAX       Counter32
    MAX-ACCESS   read-only
    STATUS       current
    DESCRIPTION
        "The number of frames received that either:
        - carry the Slow Protocols Ethernet Type value (43B.4),
          but contain an unknown PDU,  or:
        - are addressed to the Slow Protocols group MAC
          Address (43B.3), but do not carry the Slow Protocols
          Ethernet Type.
        This value is read-only."
    REFERENCE
        "IEEE 802.3 Subclause 30.7.3.1.5"
    ::= { dot3adAggPortStatsEntry 4 }


dot3adAggPortStatsIllegalRx OBJECT-TYPE
    SYNTAX       Counter32
    MAX-ACCESS   read-only
```


Copyright © 2000 IEEE. All rights reserved.
Authorized licensed use limited to: N.C. State University Libraries - Acquisitions & Discovery S. Downloaded on November 14,2023 at 14:15:01 UTC from IEEE Xplore. Restrictions apply.
Cisco v. Corrigent - IPR2023-00447
Patent Owner Corrigent Exhibit 2012-0096

```
    STATUS       current
    DESCRIPTION
        "The number of frames received that carry the Slow
        Protocols Ethernet Type value (43B.4), but contain a
        badly formed PDU or an illegal value of Protocol Subtype
        (43B.4). This value is read-only."
    REFERENCE
        "IEEE 802.3 Subclause 30.7.3.1.6"
    ::= { dot3adAggPortStatsEntry 5 }


dot3adAggPortStatsLACPDUsTx OBJECT-TYPE
    SYNTAX       Counter32
    MAX-ACCESS   read-only
    STATUS       current
    DESCRIPTION
        "The number of LACPDUs transmitted on this
        Aggregation Port. This value is read-only."
    REFERENCE
        "IEEE 802.3 Subclause 30.7.3.1.7"
    ::= { dot3adAggPortStatsEntry 6 }


dot3adAggPortStatsMarkerPDUsTx OBJECT-TYPE
    SYNTAX       Counter32
    MAX-ACCESS   read-only
    STATUS       current
    DESCRIPTION
        "The number of Marker PDUs transmitted on this
        Aggregation Port. This value is read-only."
    REFERENCE
        "IEEE 802.3 Subclause 30.7.3.1.8"
    ::= { dot3adAggPortStatsEntry 7 }


dot3adAggPortStatsMarkerResponsePDUsTx OBJECT-TYPE
    SYNTAX       Counter32
    MAX-ACCESS   read-only
    STATUS       current
    DESCRIPTION
        "The number of Marker Response PDUs transmitted
        on this Aggregation Port. This value is read-only."
    REFERENCE
        "IEEE 802.3 Subclause 30.7.3.1.9"
    ::= { dot3adAggPortStatsEntry 8 }


-- ---------------------------------------------------------------
-- LACP Debug Table
-- ---------------------------------------------------------------
dot3adAggPortDebugTable OBJECT-TYPE
    SYNTAX      SEQUENCE OF Dot3adAggPortDebugEntry
    MAX-ACCESS  not-accessible
    STATUS      current
    DESCRIPTION
        "A table that contains Link Aggregation debug
        information about every port that is associated with
        this device.  A row appears in this table for each
        physical port."
    REFERENCE
```

Copyright © 2000 IEEE. All rights reserved.

Authorized licensed use limited to: N.C. State University Libraries - Acquisitions & Discovery S. Downloaded on November 14,2023 at 14:15:01 UTC from IEEE Xplore. Restrictions apply.

Cisco v. Corrigent - IPR2023-00447
Patent Owner Corrigent Exhibit 2012-0097

```
        "IEEE 802.3 Subclause 30.7.4"
    ::= { dot3adAggPort 3 }


dot3adAggPortDebugEntry OBJECT-TYPE
    SYNTAX      Dot3adAggPortDebugEntry
    MAX-ACCESS  not-accessible
    STATUS      current
    DESCRIPTION
        "A list of the debug parameters for a port."
    INDEX { dot3adAggPortIndex }
    ::= { dot3adAggPortDebugTable 1 }


Dot3adAggPortDebugEntry ::=
    SEQUENCE {
        dot3adAggPortDebugRxState
            INTEGER,
        dot3adAggPortDebugLastRxTime
            TimeTicks,
        dot3adAggPortDebugMuxState
            INTEGER,
        dot3adAggPortDebugMuxReason
            DisplayString,
        dot3adAggPortDebugActorChurnState
            ChurnState,
        dot3adAggPortDebugPartnerChurnState
            ChurnState,
        dot3adAggPortDebugActorChurnCount
            Counter32,
        dot3adAggPortDebugPartnerChurnCount
            Counter32,
        dot3adAggPortDebugActorSyncTransitionCount
            Counter32,
        dot3adAggPortDebugPartnerSyncTransitionCount
            Counter32,
        dot3adAggPortDebugActorChangeCount
            Counter32,
        dot3adAggPortDebugPartnerChangeCount
            Counter32
    }


dot3adAggPortDebugRxState OBJECT-TYPE
    SYNTAX       INTEGER {
                    currentRx(1),
                    expired(2),
                    defaulted(3),
                    initialize(4),
                    lacpDisabled(5),
                    portDisabled(6)
                 }
    MAX-ACCESS   read-only
    STATUS       current
    DESCRIPTION
        "This attribute holds the value `currentRx' if the
        Receive state machine for the Aggregation Port is in the
        CURRENT state, `expired' if the Receive state machine is
        in the EXPIRED state, `defaulted' if the Receive state
        machine is in the DEFAULTED state, `initialize' if the
```


Copyright © 2000 IEEE. All rights reserved.
Authorized licensed use limited to: N.C. State University Libraries - Acquisitions & Discovery S. Downloaded on November 14,2023 at 14:15:01 UTC from IEEE Xplore. Restrictions apply.
Cisco v. Corrigent - IPR2023-00447
Patent Owner Corrigent Exhibit 2012-0098

```
        Receive state machine is in the INITIALIZE state,
        `lacpDisabled' if the Receive state machine is in the
        LACP_DISABLED state, or `portDisabled' if the Receive
        state machine is in the PORT_DISABLED state.
        This value is read-only."
    REFERENCE
        "IEEE 802.3 Subclause 30.7.4.1.2"
    ::= { dot3adAggPortDebugEntry 1 }


dot3adAggPortDebugLastRxTime OBJECT-TYPE
    SYNTAX       TimeTicks
    MAX-ACCESS   read-only
    STATUS       current
    DESCRIPTION
        "The value of aTimeSinceSystemReset (F.2.1) when
        the last LACPDU was received by this Aggregation Port.
        This value is read-only."
    REFERENCE
        "IEEE 802.3 Subclause 30.7.4.1.3"
    ::= { dot3adAggPortDebugEntry 2 }


dot3adAggPortDebugMuxState OBJECT-TYPE
    SYNTAX       INTEGER {
                    detached(1),
                    waiting(2),
                    attached(3),
                    collecting(4),
                    distributing(5),
                    collectingDistributing(6)
             }
    MAX-ACCESS   read-only
    STATUS       current
    DESCRIPTION
        "This attribute holds the value `detached' if the Mux
        state machine (43.4.14) for the Aggregation Port is in
        the DETACHED state, `waiting' if the Mux state machine
        is in the WAITING state, `attached' if the Mux state
        machine for the Aggregation Port is in the ATTACHED
        state, `collecting' if the Mux state machine for the
        Aggregation Port is in the COLLECTING state,
        `distributing' if the Mux state machine for the
        Aggregation Port is in the DISTRIBUTING state, and
        `collectingDistributing' if the Mux state machine for
        the Aggregation Port is in the COLLECTING_DISTRIBUTING
        state. This value is read-only."
    REFERENCE
        "IEEE 802.3 Subclause 30.7.4.1.4"
    ::= { dot3adAggPortDebugEntry 3 }


dot3adAggPortDebugMuxReason OBJECT-TYPE
    SYNTAX       DisplayString
    MAX-ACCESS   read-only
    STATUS       current
    DESCRIPTION
        "A human-readable text string indicating the reason
        for the most recent change of Mux machine state.
        This value is read-only."
```

Copyright © 2000 IEEE. All rights reserved.

Authorized licensed use limited to: N.C. State University Libraries - Acquisitions & Discovery S. Downloaded on November 14,2023 at 14:15:01 UTC from IEEE Xplore. Restrictions apply.

Cisco v. Corrigent - IPR2023-00447
Patent Owner Corrigent Exhibit 2012-0099

```
    REFERENCE
        "IEEE 802.3 Subclause 30.7.4.1.5"
    ::= { dot3adAggPortDebugEntry 4 }


dot3adAggPortDebugActorChurnState OBJECT-TYPE
    SYNTAX       ChurnState
    MAX-ACCESS   read-only
    STATUS       current
    DESCRIPTION
        "The state of the Actor Churn Detection machine
        (43.4.17) for the Aggregation Port. A value of `noChurn'
        indicates that the state machine is in either the
        NO_ACTOR_CHURN or the ACTOR_CHURN_MONITOR state, and
        `churn' indicates that the state machine is in the
        ACTOR_CHURN state. This value is read-only."
    REFERENCE
        "IEEE 802.3 Subclause 30.7.4.1.6"
    ::= { dot3adAggPortDebugEntry 5 }


dot3adAggPortDebugPartnerChurnState OBJECT-TYPE
    SYNTAX       ChurnState
    MAX-ACCESS   read-only
    STATUS       current
    DESCRIPTION
        "The state of the Partner Churn Detection machine
        (43.4.17) for the Aggregation Port. A value of `noChurn'
        indicates that the state machine is in either the
        NO_PARTNER_CHURN or the PARTNER_CHURN_MONITOR state, and
        `churn' indicates that the state machine is in the
        PARTNER_CHURN state. This value is read-only."
    REFERENCE
        "IEEE 802.3 Subclause 30.7.4.1.7"
    ::= { dot3adAggPortDebugEntry 6 }


dot3adAggPortDebugActorChurnCount OBJECT-TYPE
    SYNTAX       Counter32
    MAX-ACCESS   read-only
    STATUS       current
    DESCRIPTION
        "Count of the number of times the Actor Churn state
        machine has entered the ACTOR_CHURN state.
        This value is read-only."
    REFERENCE
        "IEEE 802.3 Subclause 30.7.4.1.8"
    ::= { dot3adAggPortDebugEntry 7 }


dot3adAggPortDebugPartnerChurnCount OBJECT-TYPE
    SYNTAX       Counter32
    MAX-ACCESS   read-only
    STATUS       current
    DESCRIPTION
        "Count of the number of times the Partner Churn
        state machine has entered the PARTNER_CHURN state.
        This value is read-only."
    REFERENCE
        "IEEE 802.3 Subclause 30.7.4.1.9"
```


Copyright © 2000 IEEE. All rights reserved.
Authorized licensed use limited to: N.C. State University Libraries - Acquisitions & Discovery S. Downloaded on November 14,2023 at 14:15:01 UTC from IEEE Xplore. Restrictions apply.
Cisco v. Corrigent - IPR2023-00447
Patent Owner Corrigent Exhibit 2012-0100

```
    ::= { dot3adAggPortDebugEntry 8 }


dot3adAggPortDebugActorSyncTransitionCount OBJECT-TYPE
    SYNTAX       Counter32
    MAX-ACCESS   read-only
    STATUS       current
    DESCRIPTION
        "Count of the number of times the Actor's Mux state
        machine (43.4.15) has entered the IN_SYNC state.
        This value is read-only."
    REFERENCE
        "IEEE 802.3 Subclause 30.7.4.1.10"
    ::= { dot3adAggPortDebugEntry 9 }


dot3adAggPortDebugPartnerSyncTransitionCount OBJECT-TYPE
    SYNTAX       Counter32
    MAX-ACCESS   read-only
    STATUS       current
    DESCRIPTION
        "Count of the number of times the Partner's Mux
        state machine (43.4.15) has entered the IN_SYNC state.
        This value is read-only."
    REFERENCE
        "IEEE 802.3 Subclause 30.7.4.1.11"
    ::= { dot3adAggPortDebugEntry 10 }


dot3adAggPortDebugActorChangeCount OBJECT-TYPE
    SYNTAX       Counter32
    MAX-ACCESS   read-only
    STATUS       current
    DESCRIPTION
        "Count of the number of times the Actor's perception of
        the LAG ID for this Aggregation Port has changed.
        This value is read-only."
    REFERENCE
        "IEEE 802.3 Subclause 30.7.4.1.12"
    ::= { dot3adAggPortDebugEntry 11 }


dot3adAggPortDebugPartnerChangeCount OBJECT-TYPE
    SYNTAX       Counter32
    MAX-ACCESS   read-only
    STATUS       current
    DESCRIPTION
        "Count of the number of times the Partner's perception
        of the LAG ID (see 43.3.6.1) for this Aggregation Port
        has changed. This value is read-only."
    REFERENCE
        "IEEE 802.3 Subclause 30.7.4.1.13"
    ::= { dot3adAggPortDebugEntry 12 }

-- ---------------------------------------------------------------
-- IEEE 802.3ad MIB - Conformance Information
-- ---------------------------------------------------------------

dot3adAggConformance OBJECT IDENTIFIER ::= { lagMIB 2 }
```

Copyright © 2000 IEEE. All rights reserved.

Authorized licensed use limited to: N.C. State University Libraries - Acquisitions & Discovery S. Downloaded on November 14,2023 at 14:15:01 UTC from IEEE Xplore. Restrictions apply.

Cisco v. Corrigent - IPR2023-00447
Patent Owner Corrigent Exhibit 2012-0101

```
dot3adAggGroups OBJECT IDENTIFIER ::= { dot3adAggConformance 1 }


dot3adAggCompliances OBJECT IDENTIFIER
    ::= { dot3adAggConformance 2 }

-- ------------------------------------------------------------
-- units of conformance
-- ------------------------------------------------------------

dot3adAggGroup OBJECT-GROUP
    OBJECTS {
        dot3adAggActorSystemID,
        dot3adAggActorSystemPriority,
        dot3adAggAggregateOrIndividual,
        dot3adAggActorAdminKey,
        dot3adAggMACAddress,
        dot3adAggActorOperKey,
        dot3adAggPartnerSystemID,
        dot3adAggPartnerSystemPriority,
        dot3adAggPartnerOperKey,
        dot3adAggCollectorMaxDelay
    }
    STATUS      current
    DESCRIPTION
        "A collection of objects providing information about an
        aggregation."
    ::= { dot3adAggGroups 1 }


dot3adAggPortListGroup OBJECT-GROUP
    OBJECTS {
        dot3adAggPortListPorts
    }
    STATUS      current
    DESCRIPTION
        "A collection of objects providing information about
        every port in an aggregation."
    ::= { dot3adAggGroups 2 }


dot3adAggPortGroup OBJECT-GROUP
    OBJECTS {
        dot3adAggPortActorSystemPriority,
        dot3adAggPortActorSystemID,
        dot3adAggPortActorAdminKey,
        dot3adAggPortActorOperKey,
        dot3adAggPortPartnerAdminSystemPriority,
        dot3adAggPortPartnerOperSystemPriority,
        dot3adAggPortPartnerAdminSystemID,
        dot3adAggPortPartnerOperSystemID,
        dot3adAggPortPartnerAdminKey,
        dot3adAggPortPartnerOperKey,
        dot3adAggPortSelectedAggID,
        dot3adAggPortAttachedAggID,
        dot3adAggPortActorPort,
        dot3adAggPortActorPortPriority,
        dot3adAggPortPartnerAdminPort,
        dot3adAggPortPartnerOperPort,
```


Copyright © 2000 IEEE. All rights reserved.
Authorized licensed use limited to: N.C. State University Libraries - Acquisitions & Discovery S. Downloaded on November 14,2023 at 14:15:01 UTC from IEEE Xplore. Restrictions apply.
Cisco v. Corrigent - IPR2023-00447
Patent Owner Corrigent Exhibit 2012-0102

```
        dot3adAggPortPartnerAdminPortPriority,
        dot3adAggPortPartnerOperPortPriority,
        dot3adAggPortActorAdminState,
        dot3adAggPortActorOperState,
        dot3adAggPortPartnerAdminState,
        dot3adAggPortPartnerOperState,
        dot3adAggPortAggregateOrIndividual
    }
    STATUS      current
    DESCRIPTION
        "A collection of objects providing information about
        every port in an aggregation."
    ::= { dot3adAggGroups 3 }


dot3adAggPortStatsGroup OBJECT-GROUP
    OBJECTS {
        dot3adAggPortStatsLACPDUsRx,
        dot3adAggPortStatsMarkerPDUsRx,
        dot3adAggPortStatsMarkerResponsePDUsRx,
        dot3adAggPortStatsUnknownRx,
        dot3adAggPortStatsIllegalRx,
        dot3adAggPortStatsLACPDUsTx,
        dot3adAggPortStatsMarkerPDUsTx,
        dot3adAggPortStatsMarkerResponsePDUsTx
    }
    STATUS      current
    DESCRIPTION
        "A collection of objects providing information about
        every port in an aggregation."
    ::= { dot3adAggGroups 4 }


dot3adAggPortDebugGroup OBJECT-GROUP
    OBJECTS {
        dot3adAggPortDebugRxState,
        dot3adAggPortDebugLastRxTime,
        dot3adAggPortDebugMuxState,
        dot3adAggPortDebugMuxReason,
        dot3adAggPortDebugActorChurnState,
        dot3adAggPortDebugPartnerChurnState,
        dot3adAggPortDebugActorChurnCount,
        dot3adAggPortDebugPartnerChurnCount,
        dot3adAggPortDebugActorSyncTransitionCount,
        dot3adAggPortDebugPartnerSyncTransitionCount,
        dot3adAggPortDebugActorChangeCount,
        dot3adAggPortDebugPartnerChangeCount
    }
    STATUS      current
    DESCRIPTION
        "A collection of objects providing debug information
        about every aggregated port."
    ::= { dot3adAggGroups 5 }

dot3adTablesLastChangedGroup OBJECT-GROUP
    OBJECTS {
        dot3adTablesLastChanged
    }
    STATUS   current
    DESCRIPTION
```

Copyright © 2000 IEEE. All rights reserved.

Authorized licensed use limited to: N.C. State University Libraries - Acquisitions & Discovery S. Downloaded on November 14,2023 at 14:15:01 UTC from IEEE Xplore. Restrictions apply.

Cisco v. Corrigent - IPR2023-00447
Patent Owner Corrigent Exhibit 2012-0103

```
        "A collection of objects providing information about the
        time of changes to the configuration of aggregations and
        their ports."
::= { dot3adAggGroup 6 }

-- ------------------------------------------------------------
-- compliance statements
-- ------------------------------------------------------------


dot3adAggCompliance MODULE-COMPLIANCE
    STATUS  current
    DESCRIPTION
        "The compliance statement for device support of
        Link Aggregation."


    MODULE
        MANDATORY-GROUPS {
            dot3adAggGroup,
            dot3adAggPortGroup,
           dot3adTablesLastChangedGroup
        }


        GROUP       dot3adAggPortListGroup
        DESCRIPTION
            "This group is optional."


        GROUP       dot3adAggPortStatsGroup
        DESCRIPTION
            "This group is optional."


        GROUP       dot3adAggPortDebugGroup
        DESCRIPTION
            "This group is optional."


    ::= { dot3adAggCompliances 1 }


END
```


Copyright © 2000 IEEE. All rights reserved.
Authorized licensed use limited to: N.C. State University Libraries - Acquisitions & Discovery S. Downloaded on November 14,2023 at 14:15:01 UTC from IEEE Xplore. Restrictions apply.
Cisco v. Corrigent - IPR2023-00447
Patent Owner Corrigent Exhibit 2012-0104

Information technology—

Telecommunications and information exchange between systems—

Local and metropolitan area networks—Specific requirements—

Amendment to Carrier Sense Multiple Access with Collision Detection (CSMA/CD) Access Method and Physical Layer Specifications—

Aggregation of Multiple Link Segments

43. Link Aggregation

43.1 Overview

This clause defines an optional Link Aggregation sublayer for use with CSMA/CD MACs. Link Aggregation allows one or more links to be aggregated together to form a Link Aggregation Group, such that a MAC Client can treat the Link Aggregation Group as if it were a single link. To this end, it specifies the establishment of DTE to DTE logical links, consisting of N parallel instances of full duplex point-to-point links operating at the same data rate.

43.1.1 Terminology

In this clause, unless otherwise noted, the term *link* refers to an *Aggregation Link* and the term *port* refers to *Aggregation Port,* as defined in 1.4. This allows for better readability of this clause while avoiding conflicting use of these terms in other clauses of this standard. Similarly, the term *Key* when used in this clause is synonymous with *Aggregation Key,* and the term *System* is synonymous with *Aggregation System*.

43.1.2 Goals and objectives

Link Aggregation, as specified in this clause, provides the following:

a) **Increased bandwidth**—The capacity of multiple links is combined into one logical link.
b) **Linearly incremental bandwidth**—Bandwidth can be increased in unit multiples as opposed to the order-of-magnitude increase available through Physical Layer technology options (10 Mb/s, 100 Mb/s, 1000 Mb/s, etc.).
c) **Increased availability**—The failure or replacement of a single link within a Link Aggregation Group need not cause failure from the perspective of a MAC Client.
d) **Load sharing**—MAC Client traffic may be distributed across multiple links.
e) **Automatic configuration**—In the absence of manual overrides, an appropriate set of Link Aggregation Groups is automatically configured, and individual links are allocated to those groups. If a set of links can aggregate, they will aggregate.
f) **Rapid configuration and reconfiguration**—In the event of changes in physical connectivity, Link Aggregation will quickly converge to a new configuration, typically on the order of 1 second or less.
g) **Deterministic behavior**—Depending on the selection algorithm chosen, the configuration can be made to resolve deterministically; i.e., the resulting aggregation can be made independent of the order in which events occur, and be completely determined by the capabilities of the individual links and their physical connectivity.

Copyright © 2000 IEEE. All rights reserved.

Authorized licensed use limited to: N.C. State University Libraries - Acquisitions & Discovery S. Downloaded on November 14,2023 at 14:15:01 UTC from IEEE Xplore. Restrictions apply.

Cisco v. Corrigent - IPR2023-00447
Patent Owner Corrigent Exhibit 2012-0105

h) **Low risk of duplication or mis-ordering**—During both steady-state operation and link (re)configuration, there is a high probability that frames are neither duplicated nor mis-ordered.
i) **Support of existing IEEE 802.3 MAC Clients**—No change is required to existing higher-layer protocols or applications to use Link Aggregation.
j) **Backwards compatibility with aggregation-unaware devices**—Links that cannot take part in Link Aggregation—either because of their inherent capabilities, management configuration, or the capabilities of the devices to which they attach—operate as normal, individual IEEE 802.3 links.
k) **Accommodation of differing capabilities and constraints**—Devices with differing hardware and software constraints on Link Aggregation are, to the extent possible, accommodated.
l) **No change to the IEEE 802.3 frame format**—Link aggregation neither adds to, nor changes the contents of frames exchanged between MAC Clients.
m) **Network management support**—The standard specifies appropriate management objects for configuration, monitoring, and control of Link Aggregation.

Link Aggregation, as specified in this clause, does not support the following:

n) **Multipoint Aggregations**—The mechanisms specified in this clause do not support aggregations among more than two Systems.
o) **Dissimilar MACs**—Link Aggregation is supported only on links using the IEEE 802.3 MAC.
p) **Half-duplex operation**—Link Aggregation is supported only on point-to-point links with MACs operating in full duplex mode.
q) **Operation across multiple data rates**—All links in a Link Aggregation Group operate at the same data rate (e.g., 10 Mb/s, 100 Mb/s, or 1000 Mb/s).

43.1.3 Positioning of Link Aggregation within the IEEE 802.3 architecture

Link Aggregation comprises an optional sublayer between a MAC Client and the MAC (or optional MAC Control sublayer). Figure 43-1 depicts the positioning of the Link Aggregation sublayer in the CSMA/CD layer architecture, and the relationship of that architecture to the Data Link and Physical Layers of the OSI Reference Model. The figure also shows the ability of the Link Aggregation sublayer to combine a number of individual links in order to present a single MAC interface to the MAC Client.

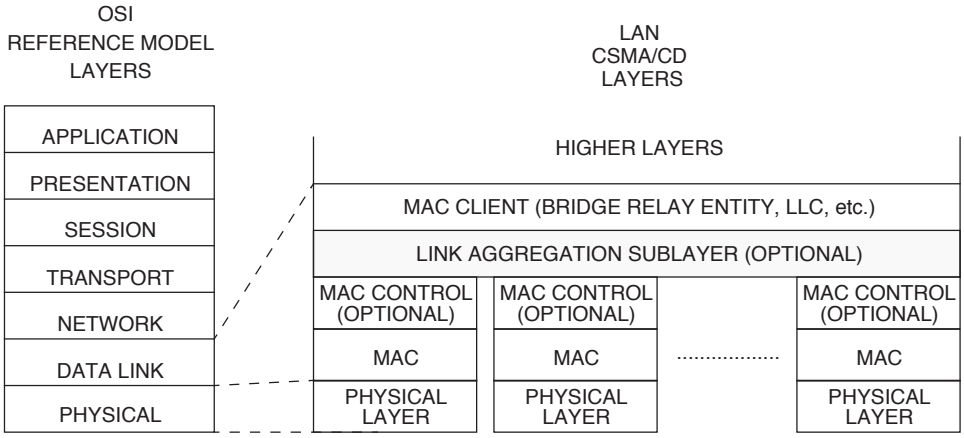

Figure 43-1—Architectural positioning of Link Aggregation sublayer

Figure 43-2 depicts the major blocks that form the Link Aggregation sublayer, and their interrelationships.

It is possible to implement the optional Link Aggregation sublayer for some ports within a System while not implementing it for other ports; i.e., it is not necessary for all ports in a System to be subject to Link

Copyright © 2000 IEEE. All rights reserved.
Authorized licensed use limited to: N.C. State University Libraries - Acquisitions & Discovery S. Downloaded on November 14,2023 at 14:15:01 UTC from IEEE Xplore. Restrictions apply.
Cisco v. Corrigent - IPR2023-00447
Patent Owner Corrigent Exhibit 2012-0106

Aggregation. A conformant implementation is not required to be able to apply the Link Aggregation sublayer to every port.

43.1.4 State diagram conventions

Many of the functions specified in this clause are presented in state diagram notation. All state diagrams contained in this clause use the notation and conventions defined in 21.5. In the event of a discrepancy between the text description and the state diagram formalization of a function, the state diagrams take precedence.

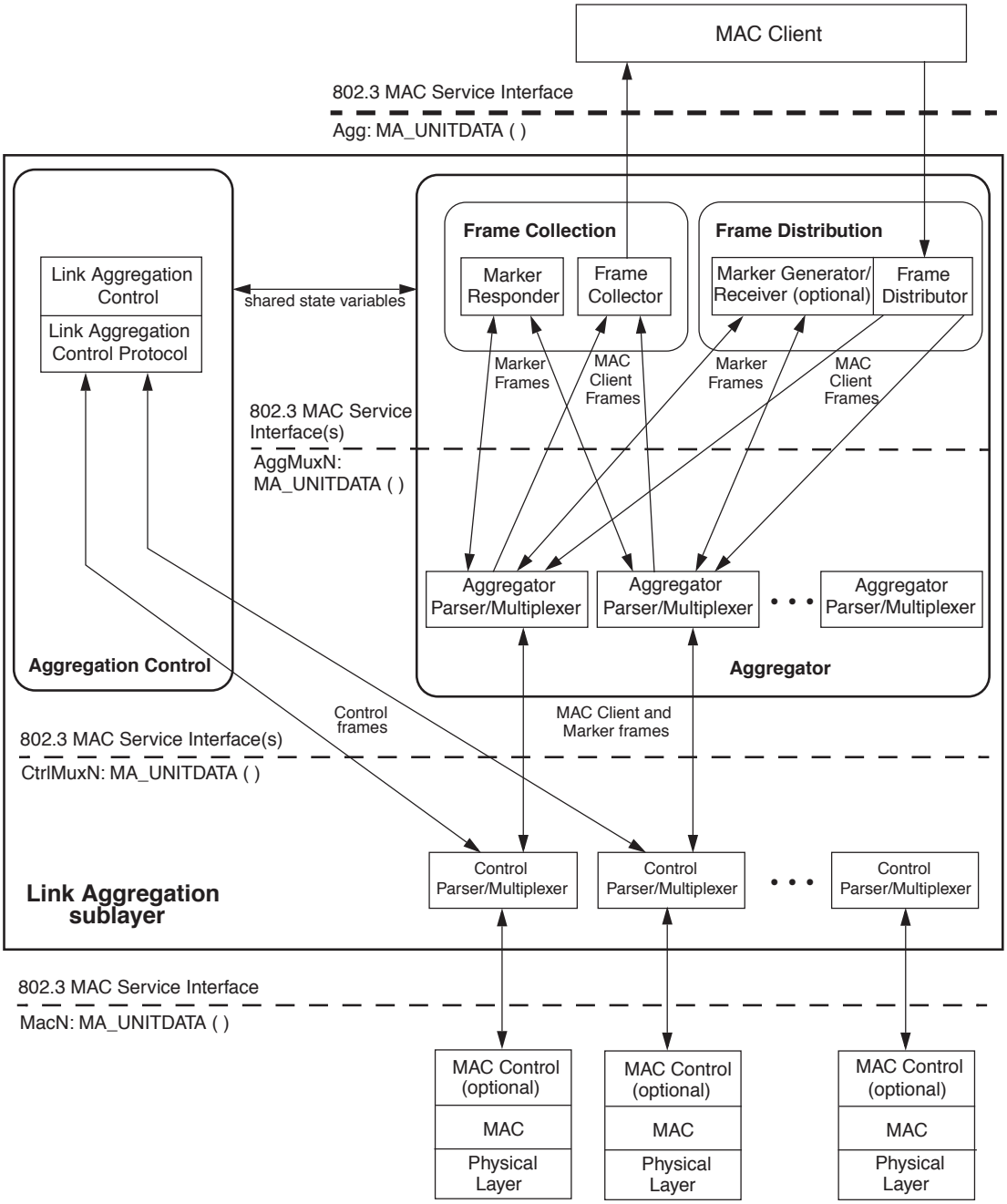

Figure 43-2—Link Aggregation sublayer block diagram

Copyright © 2000 IEEE. All rights reserved.

Authorized licensed use limited to: N.C. State University Libraries - Acquisitions & Discovery S. Downloaded on November 14,2023 at 14:15:01 UTC from IEEE Xplore. Restrictions apply.

Cisco v. Corrigent - IPR2023-00447
Patent Owner Corrigent Exhibit 2012-0107

43.2 Link Aggregation operation

As depicted in Figure 43-2, the Link Aggregation sublayer comprises the following functions:

a) *Frame Distribution*. This block is responsible for taking frames submitted by the MAC Client and submitting them for transmission on the appropriate port, based on a frame distribution algorithm employed by the Frame Distributor. Frame Distribution also includes an optional *Marker Generator/Receiver* used for the Marker protocol. (See 43.2.4, 43.2.5, and 43.5.)

b) *Frame Collection*. This block is responsible for passing frames received from the various ports to the MAC Client. Frame Collection also includes a *Marker Responder,* used for the Marker protocol. (See 43.2.3 and 43.5.)

c) *Aggregator Parser/Multiplexers*. On transmit, these blocks simply pass frame transmission requests from the Distributor, Marker Generator, and/or Marker Responder to the appropriate port. On receive, these blocks distinguish among Marker Request, Marker Response, and MAC Client PDUs, and pass each to the appropriate entity (Marker Responder, Marker Receiver, and Collector, respectively).

d) *Aggregator.* The combination of Frame Distribution and Collection, along with the Aggregator Parser/Multiplexers, is referred to as the Aggregator.

e) *Aggregation Control*. This block is responsible for the configuration and control of Link Aggregation. It incorporates a *Link Aggregation Control Protocol* (LACP) that can be used for automatic communication of aggregation capabilities between Systems and automatic configuration of Link Aggregation.

f) *Control Parser/Multiplexers*. On transmit, these blocks simply pass frame transmission requests from the Aggregator and Control entities to the appropriate port. On receive, these blocks distinguish Link Aggregation Control PDUs from other frames, passing the LACPDUs to the appropriate sublayer entity, and all other frames to the Aggregator.

43.2.1 Principles of Link Aggregation

Link Aggregation allows a MAC Client to treat a set of one or more ports as if it were a single port. In doing so, it employs the following principles and concepts:

a) A MAC Client communicates with a set of ports through an Aggregator, which presents a standard IEEE 802.3 service interface to the MAC Client. The Aggregator binds to one or more ports within a System.

b) It is the responsibility of the Aggregator to distribute frame transmissions from the MAC Client to the various ports, and to collect received frames from the ports and pass them to the MAC Client transparently.

c) A System may contain multiple Aggregators, serving multiple MAC Clients. A given port will bind to (at most) a single Aggregator at any time. A MAC Client is served by a single Aggregator at a time.

d) The binding of ports to Aggregators within a System is managed by the Link Aggregation Control function for that System, which is responsible for determining which links may be aggregated, aggregating them, binding the ports within the System to an appropriate Aggregator, and monitoring conditions to determine when a change in aggregation is needed.

e) Such determination and binding may be under manual control through direct manipulation of the state variables of Link Aggregation (e.g., Keys) by a network manager. In addition, automatic determination, configuration, binding, and monitoring may occur through the use of a Link Aggregation Control Protocol (LACP). The LACP uses peer exchanges across the links to determine, on an ongoing basis, the aggregation capability of the various links, and continuously provides the maximum level of aggregation capability achievable between a given pair of Systems.

Copyright © 2000 IEEE. All rights reserved.
Authorized licensed use limited to: N.C. State University Libraries - Acquisitions & Discovery S. Downloaded on November 14,2023 at 14:15:01 UTC from IEEE Xplore. Restrictions apply.
Cisco v. Corrigent - IPR2023-00447
Patent Owner Corrigent Exhibit 2012-0108

f) Frame ordering must be maintained for certain sequences of frame exchanges between MAC Clients (known as conversations, see 1.4). The Distributor ensures that all frames of a given conversation are passed to a single port. For any given port, the Collector is required to pass frames to the MAC Client in the order that they are received from that port. The Collector is otherwise free to select frames received from the aggregated ports in any order. Since there are no means for frames to be misordered on a single link, this guarantees that frame ordering is maintained for any conversation.

g) Conversations may be moved among ports within an aggregation, both for load balancing and to maintain availability in the event of link failures.

h) This standard does not impose any particular distribution algorithm on the Distributor. Whatever algorithm is used should be appropriate for the MAC Client being supported.

i) Each port is assigned a unique, globally administered MAC address. This MAC address is used as the source address for frame exchanges that are initiated by entities within the Link Aggregation sublayer itself (i.e., LACP and Marker protocol exchanges).

NOTE—The LACP and Marker protocols use a multicast destination address for all exchanges, and do not impose any requirement for a port to recognize more than one unicast address on received frames.

j) Each Aggregator is assigned a unique, globally administered MAC address; this address is used as the MAC address of the aggregation from the perspective of the MAC Client, both as a source address for transmitted frames and as the destination address for received frames. The MAC address of the Aggregator may be one of the MAC addresses of a port in the associated Link Aggregation Group (see 43.2.10).

43.2.2 Service interfaces

The MAC Client communicates with the Aggregator using the standard service interface specified in Clause 2. Similarly, Link Aggregation communicates internally (between Frame Collection/Distribution, the Aggregator Parser/Multiplexers, the Control Parser/Multiplexers, and Link Aggregation Control) and with its bound ports using the same, standard service interface. No new interlayer service interfaces are defined for Link Aggregation.

Since Link Aggregation uses four instances of the MAC Service Interface, it is necessary to introduce a notation convention so that the reader can be clear as to which interface is being referred to at any given time. A prefix is therefore assigned to each service primitive, indicating which of the four interfaces is being invoked, as depicted in Figure 43-2. The prefixes are as follows:

a) *Agg:,* for primitives issued on the interface between the MAC Client and the Link Aggregation sublayer.

b) *AggMuxN:,* for primitives issued on the interface between Aggregator Parser/Multiplexer N and its internal clients (where N is the port number associated with the Aggregator Parser/Multiplexer).

c) *CtrlMuxN:,* for primitives issued on the interface between Control Parser/Multiplexer N and its internal clients (where N is the port number associated with the Control Parser/Multiplexer).

d) *MacN:,* for primitives issued on the interface between underlying MAC N and its Control Parser/Multiplexer (where N is the port number associated with the underlying MAC).

MAC Clients may generate Agg:MA_DATA.request primitives for transmission on an aggregated link. These are passed by the Frame Distributor to a port selected by the distribution algorithm. MacN:MA_DATA.indication primitives signifying received frames are passed unchanged from a port to the MAC Client by the Frame Collector.

MAC Clients that generate MA_CONTROL.request primitives (and which expect MA_CONTROL.indication primitives in response) cannot communicate through a Link Aggregation sublayer. They must communicate directly with the MAC Control entity through which these control primitives are to be sent and received.

Copyright © 2000 IEEE. All rights reserved.

Authorized licensed use limited to: N.C. State University Libraries - Acquisitions & Discovery S. Downloaded on November 14,2023 at 14:15:01 UTC from IEEE Xplore. Restrictions apply.

Cisco v. Corrigent - IPR2023-00447
Patent Owner Corrigent Exhibit 2012-0109

The multiplexing of such MAC Control clients with a Link Aggregation sublayer for simultaneous use of a single port is outside the scope of this standard.

The multiplexing of MAC Clients with a Link Aggregation sublayer for simultaneous use of an individual MAC that is also part of a Link Aggregation Group is outside the scope of this standard.

43.2.3 Frame Collector

A Frame Collector is responsible for receiving incoming frames (i.e., AggMuxN:MA_DATA.indications) from the set of individual links that form the Link Aggregation Group (through each link's associated Aggregator Parser/Multiplexer) and delivering them to the MAC Client. Frames received from a given port are delivered to the MAC Client in the order that they are received by the Frame Collector. Since the Frame Distributor is responsible for maintaining any frame ordering constraints, there is no requirement for the Frame Collector to perform any reordering of frames received from multiple links.

The Frame Collector shall implement the function specified in the state diagram shown in Figure 43-3 and the associated definitions contained in 43.2.3.1.

43.2.3.1 Frame Collector state diagram

43.2.3.1.1 Constants

CollectorMaxDelay
: In tens of microseconds, the maximum time that the Frame Collector may delay the delivery of a frame received from an Aggregator Parser to its MAC Client. Value is assigned by management or administration policy.
Value: Integer

43.2.3.1.2 Variables

DA
SA
m_sdu
status
: The parameters of the MA_DATA.indication primitive, as defined in Clause 2.

BEGIN
: A Boolean variable that is set to TRUE when the System is initialized or reinitialized, and is set to FALSE when (re-)initialization has completed.
Value: Boolean

43.2.3.1.3 Messages

Agg:MA_DATA.indication
AggMuxN:MA_DATA.indication
: The service primitives used to pass a received frame to a client with the specified parameters.

Copyright © 2000 IEEE. All rights reserved.
Authorized licensed use limited to: N.C. State University Libraries - Acquisitions & Discovery S. Downloaded on November 14,2023 at 14:15:01 UTC from IEEE Xplore. Restrictions apply.
Cisco v. Corrigent - IPR2023-00447
Patent Owner Corrigent Exhibit 2012-0110

43.2.3.1.4 State diagram

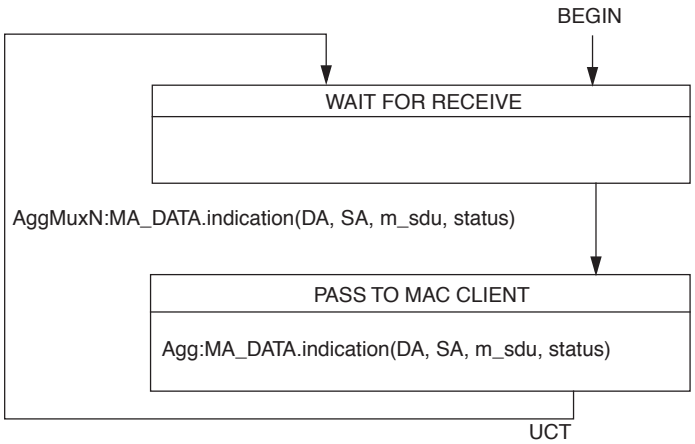

Figure 43-3—Frame Collector state diagram

The architectural models of the IEEE 802.3 MAC and Link Aggregation do not make any provision for queueing of frames between the link and the MAC Client. Furthermore, the state machine conventions used in this standard assume that actions within a state occur instantaneously (see 21.5). However, practical implementations of Link Aggregation will typically incur both queueing and delay in the Frame Collector. In order to ensure that frame delivery is not delayed indefinitely (which could cause a frame ordering problem when moving conversations from one link to another), the Frame Collector shall, upon receiving a frame from an Aggregator Parser, either deliver the frame to its MAC Client, or discard the frame within a CollectorMaxDelay time. The Frame Distributor (within the Partner System at the other end of the link) can assume that all frames transmitted on a given link have been either received by its Partner's MAC Client or discarded after a CollectorMaxDelay plus the propagation delay of the link. The use of CollectorMaxDelay is further discussed in 43A.3.

43.2.4 Frame Distributor

The Frame Distributor is responsible for taking outgoing frames from the MAC Client and transmitting them through the set of links that form the Link Aggregation Group. The Frame Distributor implements a distribution function (algorithm) responsible for choosing the link to be used for the transmission of any given frame or set of frames.

This standard does not mandate any particular distribution algorithm(s); however, any distribution algorithm shall ensure that, when frames are received by a Frame Collector as specified in 43.2.3, the algorithm shall not cause

a) Mis-ordering of frames that are part of any given conversation, or
b) Duplication of frames.

The above requirement to maintain frame ordering is met by ensuring that all frames that compose a given conversation are transmitted on a single link in the order that they are generated by the MAC Client; hence, this requirement does not involve the addition (or modification) of any information to the MAC frame, nor any buffering or processing on the part of the corresponding Frame Collector in order to re-order frames. This approach to the operation of the distribution function permits a wide variety of distribution and load balancing algorithms to be used, while also ensuring interoperability between devices that adopt differing algorithms.

Copyright © 2000 IEEE. All rights reserved.

Authorized licensed use limited to: N.C. State University Libraries - Acquisitions & Discovery S. Downloaded on November 14,2023 at 14:15:01 UTC from IEEE Xplore. Restrictions apply.
Cisco v. Corrigent - IPR2023-00447
Patent Owner Corrigent Exhibit 2012-0111

NOTE—The subject of distribution algorithms and maintenance of frame ordering is discussed in Annex 43A.

The Frame Distributor shall implement the function specified in the state diagram shown in Figure 43-4 and the associated definitions contained in 43.2.4.1.

43.2.4.1 Frame Distributor state diagram

43.2.4.1.1 Variables

DA
SA
m_sdu
service_class
The parameters of the MA_DATA.request primitive, as defined in Clause 2.

BEGIN
A Boolean variable that is set to TRUE when the System is initialized or reinitialized, and is set to FALSE when (re-)initialization has completed.
Value: Boolean

43.2.4.1.2 Messages

Agg:MA_DATA.request
AggMuxN:MA_DATA.request
The service primitives used to transmit a frame with the specified parameters.

43.2.4.1.3 State diagram

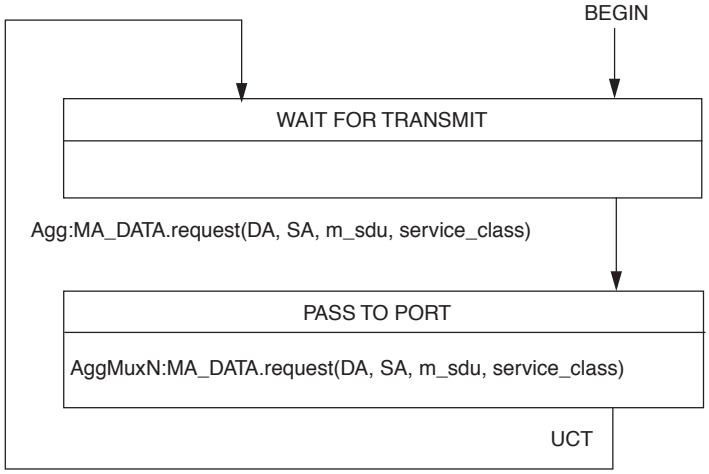

If a client issues an Agg:MA_DATA.request primitive that contains no SA parameter, the AggMuxN:MA_DATA.request primitive generated shall use the Aggregator's MAC address for the SA.

NOTE—The algorithm that the Frame Distributor uses to select the value of N in AggMuxN:MA_DATA.request for a given frame is unspecified.

Figure 43-4—Frame Distributor state diagram

Copyright © 2000 IEEE. All rights reserved.
Authorized licensed use limited to: N.C. State University Libraries - Acquisitions & Discovery S. Downloaded on November 14,2023 at 14:15:01 UTC from IEEE Xplore. Restrictions apply.
Cisco v. Corrigent - IPR2023-00447
Patent Owner Corrigent Exhibit 2012-0112

43.2.5 Marker Generator/Receiver (optional)

The optional Marker Generator is used by the Marker protocol, as specified in 43.5. When implemented and so requested by the Distribution algorithm, the Marker Generator shall issue an AggMuxN:MA_DATA.request primitive, with an m_sdu containing a Marker PDU as defined in 43.5.3, to the port associated with the conversation being marked, subject to the timing restrictions for Slow Protocols specified in Annex 43B.

The optional Marker Receiver is used by the Marker protocol, as specified in 43.5. It receives Marker Response PDUs from the Aggregator Parser.

43.2.6 Marker Responder

The Marker Responder is used by the Marker protocol, as specified in 43.5. The Marker Responder receives Marker PDUs (generated by a Partner System's Marker Generator), and transmits a Marker Response PDU through the same port from which the Marker PDU was received. While implementation of the Marker Generator/Receiver is optional, the ability to respond to a Marker PDU (the Marker Responder) is mandatory. An implementation conformant to this clause shall implement the Marker Responder as specified in 43.5.4.2, thus ensuring that implementations that need to make use of the protocol can do so.

43.2.7 Aggregator Parser/Multiplexer

On transmission, the Aggregator Multiplexer shall provide transparent pass-through of frames submitted by the Marker Responder and optional Marker Generator to the port specified in the transmission request. The Aggregator Multiplexer shall provide transparent pass-through of frames submitted by the Frame Distributor to the port specified in the transmission request only when the port state is Distributing (see 43.4.15); otherwise, such frames shall be discarded.

On receipt, the Aggregator Parser decodes frames received from the Control Parser, passes those frames destined for the Marker Responder or Marker Receiver to the selected entity, and discards frames with invalid Slow Protocol subtype values (see Table 43B–2). The Aggregator Parser shall pass all other frames to the Frame Collector for passage to the MAC Client only when the port state is Collecting (see 43.4.15); otherwise, such frames shall be discarded. The Aggregator Parser shall implement the function specified in the state diagram shown in Figure 43-5 and the associated definitions contained in 43.2.7.1.

43.2.7.1 Aggregator Parser state diagram

43.2.7.1.1 Constants

Slow_Protocols_Multicast
The value of the Slow Protocols Multicast address. (See Table 43B-1.)

Slow_Protocols_Type
The value of the Slow Protocols Length/Type field. (See Annex 43B.)

Marker_subtype
The value of the Subtype field for the Marker protocol. (See 43.5.3.)
Value: Integer
2

Marker_Information
The encoding of the Marker Information TLV_type field. (See 43.5.3.)
Value: Integer
1

Copyright © 2000 IEEE. All rights reserved.

Authorized licensed use limited to: N.C. State University Libraries - Acquisitions & Discovery S. Downloaded on November 14,2023 at 14:15:01 UTC from IEEE Xplore. Restrictions apply.
Cisco v. Corrigent - IPR2023-00447
Patent Owner Corrigent Exhibit 2012-0113

Marker_Response_Information
The encoding of the Marker Response Information TLV_type field. (See 43.5.3.)
Value: Integer
2

43.2.7.1.2 Variables

DA
SA
m_sdu
status
The parameters of the MA_DATA.indication primitive as defined in Clause 2.

Length/Type
The value of the Length/Type field in a received frame.
Value: Integer

Subtype
The value of the octet following the Length/Type field in a Slow Protocol frame.
(See Annex 43B.)
Value: Integer

TLV_type
The value contained in the octet following the Version Number in a received Marker or Marker Response frame. This identifies the "type" for the Type/Length/Value (TLV) tuple. (See 43.5.3.)
Value: Integer

BEGIN
A Boolean variable that is set to TRUE when the System is initialized or reinitialized, and is set to FALSE when (re-)initialization has completed.
Value: Boolean

43.2.7.1.3 Messages

CtrlMuxN:MA_DATA.indication
AggMuxN:MA_DATA.indication
The service primitives used to pass a received frame to a client with the specified parameters.

43.2.8 Aggregator

An *Aggregator* comprises an instance of a Frame Collection function, an instance of a Frame Distribution function and one or more instances of the Aggregator Parser/Multiplexer function for a Link Aggregation Group. A single Aggregator is associated with each Link Aggregation Group. An Aggregator offers a standard IEEE 802.3 MAC service interface to its associated MAC Client; access to the MAC service by a MAC Client is always achieved via an Aggregator. An Aggregator can therefore be considered to be a *logical MAC*, bound to one or more ports, through which the MAC client is provided access to the MAC service.

A single, individual MAC address is associated with each Aggregator (see 43.2.10).

An Aggregator is available for use by the MAC Client if the following are all true:

a) It has one or more attached ports.
b) The Aggregator has not been set to a disabled state by administrative action (see 30.7.1.1.13).

Copyright © 2000 IEEE. All rights reserved.
Authorized licensed use limited to: N.C. State University Libraries - Acquisitions & Discovery S. Downloaded on November 14,2023 at 14:15:01 UTC from IEEE Xplore. Restrictions apply.
Cisco v. Corrigent - IPR2023-00447
Patent Owner Corrigent Exhibit 2012-0114

c) The collection and/or distribution function associated with one or more of the attached ports is enabled (see 30.7.1.1.14).

NOTE—To simplify the modeling and description of the operation of Link Aggregation, it is assumed that there are as many Aggregators as there are ports in a given System; however, this is not a requirement of this standard. Aggregation of two or more ports consists of changing the bindings between ports and Aggregators such that more than one port is bound to a single Aggregator. The creation of any aggregations of two or more links will therefore result in one or more Aggregators that are bound to more than one port, and one or more Aggregators that are not bound to any port. An Aggregator that is not bound to any port appears to a MAC Client as a MAC interface to an inactive port. During times when the bindings between ports and Aggregators are changing, or as a consequence of particular configuration choices, there may be occasions when one or more ports are not bound to any Aggregator.

43.2.8.1 State diagram

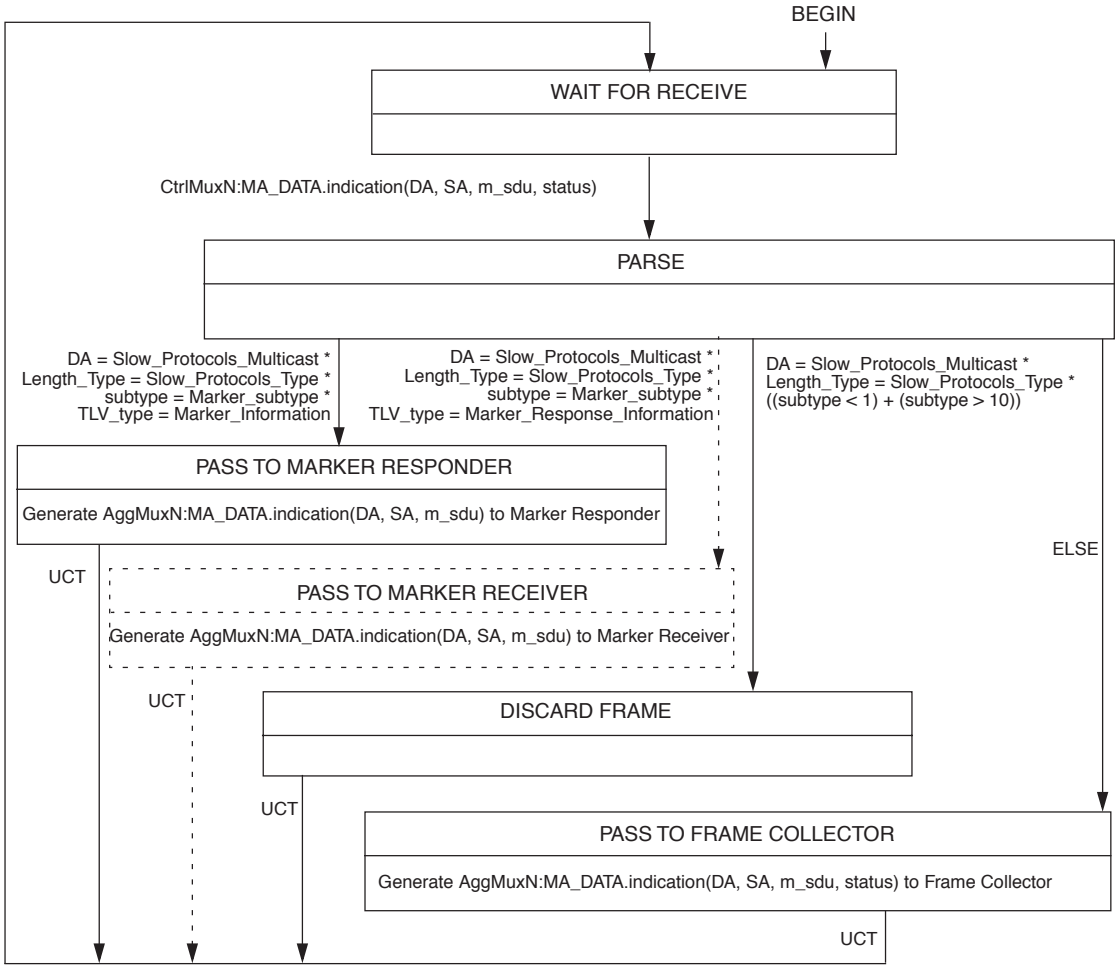

If the optional Marker Receiver is not implemented, Marker Responses shall be passed to the Frame Collector. If the port state is not Collecting, all frames that would have been passed to the MAC Client through the Collector will be discarded.

Figure 43-5—Aggregator Parser state diagram

43.2.9 Control Parser/Multiplexer

On transmission, the Control Multiplexer shall provide transparent pass-through of frames submitted by the Aggregator and Link Aggregation Control Protocol to the port specified in the transmission request.

Copyright © 2000 IEEE. All rights reserved.

Authorized licensed use limited to: N.C. State University Libraries - Acquisitions & Discovery S. Downloaded on November 14,2023 at 14:15:01 UTC from IEEE Xplore. Restrictions apply.
Cisco v. Corrigent - IPR2023-00447
Patent Owner Corrigent Exhibit 2012-0115

On receipt, the Control Parser decodes frames received from the various ports in the Link Aggregation Group, passes those frames destined for the Link Aggregation Control Protocol to the appropriate entity, and passes all other frames to the Aggregator Parser. The Control Parser shall implement the function specified by the state diagram shown in Figure 43-6 and the associated definitions contained in 43.2.9.1.

43.2.9.1 Control Parser state diagram

43.2.9.1.1 Constants

Slow_Protocols_Multicast
The value of the Slow Protocols Multicast address. (See Table 43B-1.)

Slow_Protocols_Type
The value of the Slow Protocols Length/Type field. (See Table 43B-2.)

LACP_subtype
The value of the Subtype field for the Link Aggregation Control Protocol. (See Table 43B-3.)
Value: Integer
1

43.2.9.1.2 Variables

DA
SA
m_sdu
status
The parameters of the MA_DATA.indication primitive, as defined in Clause 2.

Length/Type
The value of the Length/Type field in a received frame.
Value: Integer

Subtype
The value of the octet following the Length/Type field in a Slow Protocol frame.
(See Annex 43B.)
Value: Integer

BEGIN
A Boolean variable that is set to TRUE when the System is initialized or reinitialized, and is set to FALSE when (re-)initialization has completed.
Value: Boolean

43.2.9.1.3 Messages

MacN:MA_DATA.indication
CtrlMuxN:MA_DATA.indication
The service primitives used to pass a received frame to a client with the specified parameters.

Copyright © 2000 IEEE. All rights reserved.
Authorized licensed use limited to: N.C. State University Libraries - Acquisitions & Discovery S. Downloaded on November 14,2023 at 14:15:01 UTC from IEEE Xplore. Restrictions apply.
Cisco v. Corrigent - IPR2023-00447
Patent Owner Corrigent Exhibit 2012-0116

43.2.9.1.4 State diagram

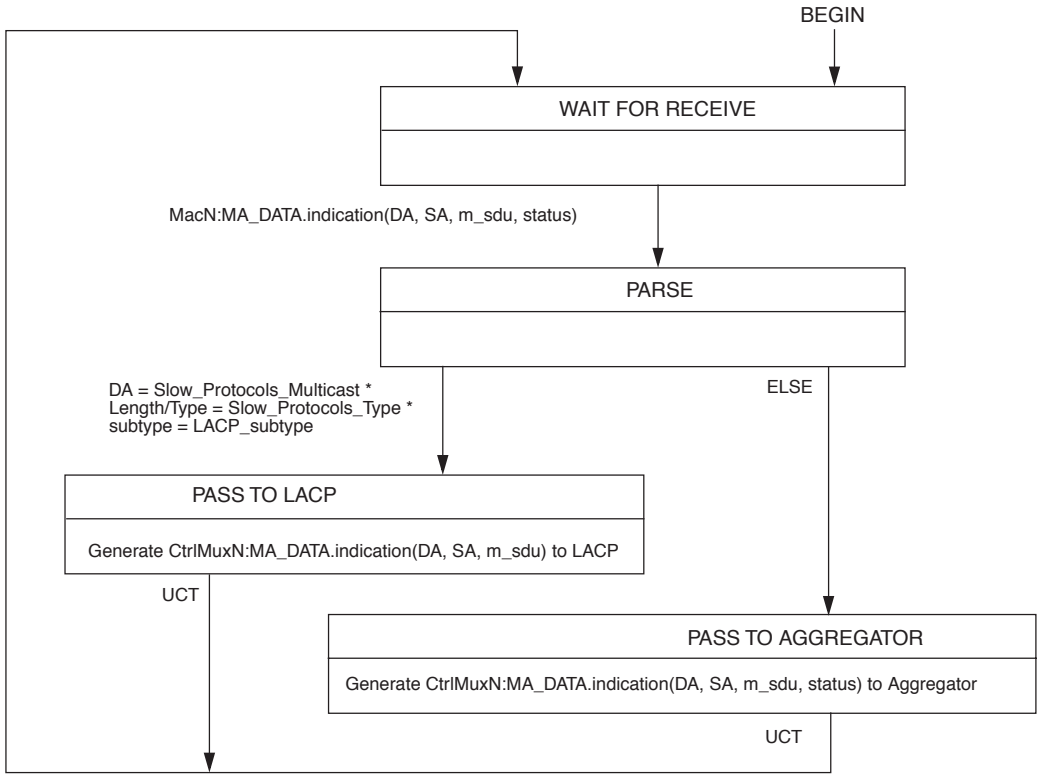

Figure 43-6—Control Parser state diagram

43.2.10 Addressing

Each IEEE 802.3 MAC has an associated globally-unique individual MAC address, whether that MAC is used for Link Aggregation or not (see Clause 4).

Each Aggregator to which one or more ports are attached has an associated globally-unique individual MAC address (see 43.3.3). The MAC address of the Aggregator may be the globally-unique individual MAC addresses of one of the MACs in the associated Link Aggregation Group, or it may be a distinct MAC address. The manner in which such addresses are chosen is not otherwise constrained by this standard.

Protocol entities sourcing frames from within the Link Aggregation sublayer (e.g., LACP and the Marker protocol) use the MAC address of the MAC within an underlying port as the source address in frames transmitted through that port. The MAC Client sees only the Aggregator and not the underlying MACs, and therefore uses the Aggregator's MAC address as the source address in transmitted frames. If a MAC Client submits a frame to the Aggregator for transmission without specifying a source address, the Aggregator inserts its own MAC address as the source address for transmitted frames.

NOTE—This behavior causes the Aggregator to behave the same way as a standard MAC with regard to frames submitted by its client.

Copyright © 2000 IEEE. All rights reserved.

Authorized licensed use limited to: N.C. State University Libraries - Acquisitions & Discovery S. Downloaded on November 14,2023 at 14:15:01 UTC from IEEE Xplore. Restrictions apply.
Cisco v. Corrigent - IPR2023-00447
Patent Owner Corrigent Exhibit 2012-0117

43.3 Link Aggregation Control

Link Aggregation Control configures and controls the Link Aggregation sublayer using static information local to the control function and dynamic information exchanged by means of the Link Aggregation Control Protocol.

For each aggregatable port in the System, Link Aggregation Control

a) Maintains configuration information (reflecting the inherent properties of the individual links as well as those established by management) to control aggregation.
b) Exchanges configuration information with other Systems to allocate the link to a Link Aggregation Group.

NOTE—A given link is allocated to, at most, one Link Aggregation Group at a time. The allocation mechanism attempts to maximize aggregation, subject to management controls.

c) Attaches the port to the Aggregator used by the Link Aggregation Group, and detaches the port from the Aggregator when it is no longer used by the Group.
d) Uses information from the Partner System's Link Aggregation Control entity to enable or disable the Aggregator's Collector and Distributor.

The operation of Link Aggregation Control involves the following activities, which are described in detail in the subclauses that follow:

e) Checking that candidate links can actually be aggregated.
f) Controlling the addition of a link to a Link Aggregation Group, and the creation of the group if necessary.
g) Monitoring the status of aggregated links to ensure that the aggregation is still valid.
h) Removing a link from a Link Aggregation Group if its membership is no longer valid, and removing the group if it no longer has any member links.

In order to allow Link Aggregation Control to determine whether a set of links connect to the same System, and to determine whether those links are compatible from the point of view of aggregation, it is necessary to be able to establish

i) A globally unique identifier for each System that participates in Link Aggregation (see 43.3.2).
j) A means of identifying the set of capabilities associated with each port and with each Aggregator, as understood by a given System.
k) A means of identifying a Link Aggregation Group and its associated Aggregator.

System identification allows the detection of links that are connected in a loopback configuration (i.e., both ends of the same link are connected to the same System).

43.3.1 Characteristics of Link Aggregation Control

Link Aggregation Control provides a configuration capability that is

a) **Automatic.** In the absence of manual override controls, an appropriate set of Link Aggregation Groups is automatically configured, and individual links are allocated to those groups. If a set of links can aggregate, they do aggregate.
b) **Continuous.** Manual intervention or initialization events are not a requirement for correct operation. The configuration mechanism continuously monitors for changes in state that require reconfiguration. The configuration functions detect and correct misconfigurations by performing reconfiguration and/or by taking misconfigured links out of service.

Copyright © 2000 IEEE. All rights reserved.
Authorized licensed use limited to: N.C. State University Libraries - Acquisitions & Discovery S. Downloaded on November 14,2023 at 14:15:01 UTC from IEEE Xplore. Restrictions apply.
Cisco v. Corrigent - IPR2023-00447
Patent Owner Corrigent Exhibit 2012-0118

c) **Deterministic.** The configuration can resolve deterministically; i.e., the configuration achieved can be made independent of the order in which events occur, and be completely determined by the combination of the capabilities of the individual links and their physical connectivity.
d) **Controllable.** The configuration capabilities accommodate devices with differing hardware and software constraints on Link Aggregation.
e) **Compatible.** Links that cannot take part in Link Aggregation, either because of their inherent capabilities or of the capabilities of the devices to which they attach, operate as normal IEEE 802.3 links. The introduction of Link Aggregation capability at one or both ends of a link should not result in a degradation of the perceived performance of the link.
f) **Rapid.** The configuration resolves rapidly to a stable configuration. Convergence can be achieved by the exchange of three LACPDUs, without dependence on timer values.

with

g) **Low risk of misdelivery.** The operation of the (re-)configuration functions minimizes the risk of frames being delivered to the wrong Aggregator.
h) **Low risk of duplication or mis-ordering.** The operation of the (re-)configuration functions minimizes the risk of frame duplication and frame mis-ordering.
i) **Low protocol overhead.** The overhead involved in external communication of configuration information between devices is small.

43.3.2 System identification

The globally unique identifier used to identify a System shall be the concatenation of a globally administered individual MAC address and the System Priority. The MAC address chosen may be the individual MAC address associated with one of the ports of the System.

Where it is necessary to perform numerical comparisons between System Identifiers, each System Identifier is considered to be an eight octet unsigned binary number, constructed as follows:

a) The two most significant octets of the System Identifier comprise the System Priority. The System Priority value is taken to be an unsigned binary number; the most significant octet of the System Priority forms the most significant octet of the System Identifier.
b) The third most significant octet of the System Identifier is derived from the initial octet of the MAC address; the least significant bit of the octet is assigned the value of the first bit of the MAC address, the next most significant bit of the octet is assigned the value of the next bit of the MAC address, and so on. The fourth through eighth octets are similarly assigned the second through sixth octets of the MAC address.

43.3.3 Aggregator identification

Each Aggregator to which one or more ports are attached shall be assigned a unique, globally administered individual MAC address. The MAC address assigned to the Aggregator may be the same as the MAC address assigned to one of its bound ports. No Aggregator shall be assigned a MAC address that is the same as that of a port bound to a different Aggregator within the System. When receiving frames, a port is never required to recognize more than one unicast address, i.e., the Aggregator's MAC address.

NOTE—This ensures that Aggregators can be uniquely addressed, and allows (but does not require) the unique address to be allocated from the same set of addresses as are assigned to the ports. It also acknowledges the fact that locally administered addresses may be used in particular implementations or environments. The stated restriction on the allocation of MAC addresses to Aggregators may have implications with regard to the choice of selection algorithm.

Copyright © 2000 IEEE. All rights reserved.

Authorized licensed use limited to: N.C. State University Libraries - Acquisitions & Discovery S. Downloaded on November 14,2023 at 14:15:01 UTC from IEEE Xplore. Restrictions apply.

Cisco v. Corrigent - IPR2023-00447
Patent Owner Corrigent Exhibit 2012-0119

An aggregator also shall be assigned an integer identifier that is used by Link Aggregation Control to uniquely identify the aggregator within the System. This value will typically be the same as the interface identifier (ifIndex) used for management purposes.

43.3.4 Port identification

Link Aggregation Control uses a Port Identifier, comprising the concatenation of a Port Priority and a Port Number, to identify the port. Port Numbers (and hence, Port Identifiers) shall be uniquely assigned within a System. Port Number 0 shall not be assigned to any port.

When it is necessary to perform numerical comparisons between Port Identifiers, each Port Identifier is considered to be a four octet unsigned binary number constructed as follows:

a) The most significant and second most significant octets are the first and second most significant octets of the Port Priority, respectively.
b) The third and fourth most significant octets are the first and second most significant octets of the Port Number, respectively.

43.3.5 Capability identification

The ability of one port to aggregate with another is summarized by a simple integer parameter, known as a Key. This facilitates communication and comparison of aggregation capabilities, which may be determined by a number of factors, including

a) The port's physical characteristics, such as data rate, duplexity, point-to-point or shared medium.
b) Configuration constraints established by the network administrator.
c) Use of the port by higher layer protocols (e.g. assignment of Network Layer addresses).
d) Characteristics or limitations of the port implementation itself.

Two Keys shall be associated with each port: an operational Key and an administrative Key. The operational Key is the Key that is currently in active use for the purposes of forming aggregations. The administrative Key allows manipulation of Key values by management. The administrative and operational Keys assigned to a port may differ

e) If the operation of the implementation is such that an administrative change to a Key value cannot be immediately reflected in the operational state of the port.
f) If the System supports the dynamic manipulation of Keys, as discussed in 43.6.2, either to accurately reflect changes in operational capabilities of the port (for example, as a result of Auto-Negotiation), or to provide a means of handling constraints on aggregation capability.

A given Key value is meaningful only in the context of the System that allocates it; there is no global significance to Key values. Similarly, the relationship between administrative and operational Key values is meaningful only in the context of the System that allocates it. When a System assigns an administrative Key value to a set of ports, it signifies that the set of ports have the potential to aggregate together, subject to the considerations discussed in 43.6.2. When a System assigns an operational Key value to a set of ports, it signifies that, in the absence of other constraints, the current operational state of the set of ports allows any subset of that set of ports (including the entire set) to be aggregated together from the perspective of the System making the assignment. The set of such ports that will actually be aggregated will be those that terminate at a common Partner System, and for which that Partner System has assigned a common operational Key value, local to that Partner. The set of ports in a given System that share the same operational Key value are said to be members of the same Key Group.

Copyright © 2000 IEEE. All rights reserved.
Authorized licensed use limited to: N.C. State University Libraries - Acquisitions & Discovery S. Downloaded on November 14,2023 at 14:15:01 UTC from IEEE Xplore. Restrictions apply.
Cisco v. Corrigent - IPR2023-00447
Patent Owner Corrigent Exhibit 2012-0120

A System may determine that a given link is not able to be aggregated with other links. Such links are referred to as Individual links (as opposed to Aggregatable links). A System may declare a link to be Individual if the inherent properties of the link allow its use as part of an aggregation, but the system is aware of no other links that are capable of aggregating with this link (e.g., the System has allocated a unique operational Key value to the link).

The capability information communicated between Systems, therefore, includes this local knowledge of the aggregation capability of the link in addition to the operational Key value; i.e., whether the System considers the link to be Aggregatable or Individual.

An administrative Key value and an operational Key value shall also be associated with each Aggregator. The operational Key is the Key that is currently in active use for the purposes of forming aggregations. The administrative Key allows manipulation of Key values by management. The values of administrative and operational Key for an Aggregator may differ in the same manner as that of port Keys, per item e) and item f), in this subclause. Ports that are members of a given Key Group can only be bound to Aggregators that share the same operational Key value.

All Keys are 16-bit identifiers. All values except the null value (all zeroes) are available for local use.

NOTE—This model allows for two convenient initial configurations. The first is achieved by assigning each port an initial administrative and operational Key value identical to its port number, and assigning the same port numbers as Keys to the corresponding Aggregators for each port. A device with this initial configuration will bring up all links as individual, non-aggregated links. The second is achieved by assigning the same administrative and operational Key values to all ports with a common set of capabilities, and also to all Aggregators. A device with this initial configuration will attempt to aggregate together any set of links that have the same Partner System ID and operational Key, and for which both Systems are prepared to allow aggregation.

43.3.6 Link Aggregation Group identification

A Link Aggregation Group consists of either

a) One or more Aggregatable links that terminate in the same pair of Systems and whose ports belong to the same Key Group in each System, or
b) An Individual link.

43.3.6.1 Construction of the Link Aggregation Group Identifier

A unique Link Aggregation Group Identifier (LAG ID) is constructed from the following parameters for each of the communicating Systems:

a) The System Identifier
b) The operational Key assigned to the ports in the LAG
c) The Port Identifier, if the link is identified as an Individual link

The local System's values for these parameters shall be non-zero. In cases where the local System is unable to determine the remote System's values for these parameters by exchange of protocol information, administrative values are used in the construction of the LAG ID. The value of these administrative parameters for the remote System may be configured as zero, provided that the port(s) concerned are also configured to be Individual.

A compound identifier formed from the System Identifiers and Key values alone is sufficient to identify a LAG comprising Aggregatable links. However, such an identifier is not sufficient for a LAG comprising a single Individual link where the Partner System Identifier and operational Key may be zero. Even if these are non-zero there may be multiple Individual Links with the same System Identifier and operational Key combinations, and it becomes necessary to include Port Identifiers to provide unique LAG IDs.

Copyright © 2000 IEEE. All rights reserved.

Authorized licensed use limited to: N.C. State University Libraries - Acquisitions & Discovery S. Downloaded on November 14,2023 at 14:15:01 UTC from IEEE Xplore. Restrictions apply.

Cisco v. Corrigent - IPR2023-00447
Patent Owner Corrigent Exhibit 2012-0121

Given

d) S and T are System Identifiers,
e) K and L are the operational Keys assigned to a LAG by S and T respectively, and
f) P and Q are the Port Identifiers of the ports being attached if the LAG comprises a single Individual Link and zero if the LAG comprises one or more Aggregatable links,

then the general form of the unique LAG ID is [(SKP), (TLQ)].

To simplify comparison of LAG IDs it is conventional to order these such that S is the numerically smaller of S and T.

43.3.6.2 Representation of the Link Aggregation Group Identifier

In order to allow for convenient transcription and interpretation by human network personnel, this standard provides a convention for representing compound LAG IDs. Using this format

a) All fields are written as hexadecimal numbers, 2 digits per octet, in canonical format.
b) Octets are presented in order, from left to right. Within fields carrying numerical significance (e.g., priority values), the most significant octet is presented first, and the least significant octet last.
c) Within fields that carry MAC addresses, successive octets are separated by dashes (-), in accordance with the hexadecimal representation for MAC addresses defined in IEEE Std 802-1990.
d) Parameters of the LAG ID are separated by commas.

For example, consider the parameters for the two Partners in a Link Aggregation Group shown in Table 43-1.

Table 43-1—Example Partner Parameters

	Partner SKP	Partner TLQ
System Parameters (S, T)	System Priority = 0x8000 (see 43.4.2.2) System Identifier = AC-DE-48-03-67-80	System Priority = 0x8000 (see 43.4.2.2) System Identifier = AC-DE-48-03-FF-FF
Key Parameter (K, L)	Key = 0x0001	Key = 0x00AA
Port Parameters (P, Q)	Port Priority = 0x80 (see 43.4.2.2) Port Number = 0x0002	Port Priority = 0x80 (see 43.4.2.2) Port Number = 0x0002

The complete LAG ID derived from this information is represented as follows, for an Individual link:

[(SKP), (TLQ)] = [(8000,AC-DE-48-03-67-80,0001,80,0002), (8000,AC-DE-48-03-FF-FF,00AA,80,0002)]

The corresponding LAG ID for a set of Aggregatable links is represented as follows:

[(SKP), (TLQ)] = [(8000,AC-DE-48-03-67-80,0001,00,0000), (8000,AC-DE-48-03-FF-FF,00AA,00,0000)]

NOTE—The difference between the two representations is that, for an Aggregatable link, the port identifier components are zero.

It is recommended that this format be used whenever displaying LAG ID information for use by network personnel.

Copyright © 2000 IEEE. All rights reserved.
Authorized licensed use limited to: N.C. State University Libraries - Acquisitions & Discovery S. Downloaded on November 14,2023 at 14:15:01 UTC from IEEE Xplore. Restrictions apply.
Cisco v. Corrigent - IPR2023-00447
Patent Owner Corrigent Exhibit 2012-0122

43.3.7 Selecting a Link Aggregation Group

Each port is selected for membership in the Link Aggregation Group uniquely identified by the LAG ID (composed of operational information, both derived from local administrative parameters and received through the Link Aggregation Control Protocol). Initial determination of the LAG ID is delayed to allow receipt of such information from a peer Link Aggregation Control entity; in the event such information is not received, locally configured administrative defaults are assumed for the remote port's operational parameters.

Where a particular link is known to be Individual, the complete LAG ID is not required to select the Link Aggregation Group since the link will not be aggregated with any other.

43.3.8 Agreeing on a Link Aggregation Group

Before frames are distributed and collected from a link, both the local Link Aggregation Control entity and its remote peer (if present) need to agree on the Link Aggregation Group. The Link Aggregation Control Protocol allows each of the communicating entities to check their peer's current understanding of the LAG ID, and facilitates rapid exchange of operational parameters while that understanding differs from their own. The protocol entities monitor their operation and, if agreement is not reached (perhaps due to an implementation failure), management is alerted.

The ability of LACP to signal that a particular link is Individual can accelerate the use of the link since, if both Link Aggregation Control entities know that the link is Individual, full agreement on the LAG ID is not necessary.

43.3.9 Attaching a link to an Aggregator

Once a link has selected a Link Aggregation Group, Link Aggregation Control can attach that link to a compatible Aggregator. An Aggregator is compatible if

a) The Aggregator's operational Key matches the port's operational Key, and
b) All other links currently attached to the Aggregator have selected the same Link Aggregation Group.

If several compatible Aggregators exist, Link Aggregation Control may employ a locally determined algorithm, either to ensure deterministic behavior (i.e., independence from the order in which Aggregators become available) or to maximize availability of the aggregation to a MAC Client. If no compatible Aggregator exists, then it is not possible to enable the link until such a time as a compatible Aggregator becomes available.

NOTE—In a properly configured System, there should always be a suitable Aggregator available with the proper Key assigned to serve a newly created Link Aggregation Group, so the unavailability of a compatible Aggregator is normally a temporary state encountered while links are moved between Aggregators. However, given the flexibility of the Key scheme, and given that in some implementations there may not be enough Aggregators to service a given configuration of links, it is possible to create configurations in which there is no Aggregator available to serve a newly identified LAG, in which case the links that are members of that LAG cannot become active until such a time as the configuration is changed to free up an appropriate Aggregator.

Links that are not successful candidates for aggregation (e.g., links that are attached to other devices that cannot perform aggregation or links that have been manually configured to be non-aggregatable) are enabled to operate as individual IEEE 802.3 links. For consistency of modeling, such a link is regarded as being attached to a compatible Aggregator that can only be associated with a single link. That is, from the perspective of Link Aggregation, non-aggregated links are not a special case; they compose an aggregation with a maximum membership of one link.

Copyright © 2000 IEEE. All rights reserved.

Authorized licensed use limited to: N.C. State University Libraries - Acquisitions & Discovery S. Downloaded on November 14,2023 at 14:15:01 UTC from IEEE Xplore. Restrictions apply.

Cisco v. Corrigent - IPR2023-00447
Patent Owner Corrigent Exhibit 2012-0123

More than one link can select the same Link Aggregation Group within a short period of time and, as these links detach from their prior Aggregators, additional compatible Aggregators can become available. In order to avoid such events causing repeated configuration changes, Link Aggregation Control applies hysteresis to the attachment process and allows multiple links to be attached to an Aggregator at the same time.

43.3.10 Signaling readiness to transfer user data

Once a link has been attached to an Aggregator (43.3.9) compatible with the agreed-upon Link Aggregation Group (43.3.8), each Link Aggregation Control entity signals to its peer its readiness to transfer user data to and from the Aggregator's MAC Client. In addition to allowing time for the organization of local Aggregator resources, including the possibility that a compatible Aggregator may not exist, explicit signaling of readiness to transfer user data can be delayed to ensure preservation of frame ordering and prevention of frame duplication. Link Aggregation Control will not signal readiness until it is certain that there are no frames in transit on the link that were transmitted while the link was a member of a previous Link Aggregation Group. This may involve the use of an explicit Marker protocol that ensures that no frames remain to be received at either end of the link before reconfiguration takes place. The operation of the Marker protocol is described in 43.5. The decision as to when, or if, the Marker protocol is used is entirely dependent upon the nature of the distribution algorithm that is employed.

43.3.11 Enabling Collection and Distribution

Every Aggregator can enable or disable Collection and Distribution of frames for each port that is attached to the Aggregator. Initially, both Collection and Distribution are disabled. Once the Link Aggregation Control entity is ready to transfer user data using the link and its peer entity has also signaled readiness, the process of enabling the link can proceed. The Collector is enabled (thus preparing it to receive frames sent over the link by the remote Aggregator's Distributor) and that fact is communicated to the Partner. Once the received information indicates that the remote Aggregator's Collector is enabled, the Distributor is also enabled.

NOTE—This description assumes that the implementation is capable of controlling the state of the transmit and receive functions of the MAC independently. In an implementation where this is not possible, the transmit and receive functions are enabled or disabled together. The manner in which this is achieved is detailed in the description of the Mux machine (see 43.4.15).

If at least one port's Mux in the Link Aggregation Group is Collecting, then the Receive state of the corresponding Aggregator will be Enabled. If at least one port's Mux in the Link Aggregation Group is Distributing, then the Transmit state of the corresponding Aggregator will be Enabled.

43.3.12 Monitoring the membership of a Link Aggregation Group

Each link is monitored in order to confirm that the Link Aggregation Control functions at each end of the link still agree on the configuration information for that link. If the monitoring process detects a change in configuration that materially affects the link's membership in its current LAG, then it may be necessary to remove the link from its current LAG and to move it to a new LAG.

43.3.13 Detaching a link from an Aggregator

A port may be detached from the Aggregator used by its Link Aggregation Group as a result of protocol (e.g., Key) changes, or because of System constraints (e.g., exceeding a maximum allowable number of aggregated links, or device failures) at either end of the link. Both classes of events will cause the LAG ID information for the link to change, and it will be necessary for Link Aggregation Control to detach the link from its current Aggregator and move it to a new LAG (if possible). At the point where the change is detected, the Collecting and Distributing states for the port are set to FALSE. The Frame Distribution function is informed that the link is no longer part of the group, the changed configuration information is

Copyright © 2000 IEEE. All rights reserved.
Authorized licensed use limited to: N.C. State University Libraries - Acquisitions & Discovery S. Downloaded on November 14,2023 at 14:15:01 UTC from IEEE Xplore. Restrictions apply.
Cisco v. Corrigent - IPR2023-00447
Patent Owner Corrigent Exhibit 2012-0124

communicated to the corresponding Link Aggregation Partner, then the Frame Collection function is informed that the link is no longer part of the group.

Once a link has been removed from its Aggregator, the link can select its new Link Aggregation Group and then attach to a compatible Aggregator, as described in 43.3.7 and 43.3.9.

Any conversation that is reallocated to a different link as a result of detaching a link from an Aggregator shall have its frame ordering preserved. This may involve the use of the Marker protocol to ensure that no frames that form part of that conversation remain to be received at either end of the old link before the conversation can proceed on the new link.

43.3.14 Configuration and administrative control of Link Aggregation

Administrative configuration facilities allow a degree of control to be exerted over the way that links may be aggregated. In particular, administrative configuration allows

a) The Key values associated with a port to be identified or modified.
b) The Key values associated with an Aggregator to be identified or modified.
c) Links to be identified as being incapable of aggregation.
d) Link Aggregation Control Protocol parameters to be identified or modified.

43.3.15 Link Aggregation Control state information

The Link Aggregation Control function maintains the following information with respect to each link:

a) The identifier of the Link Aggregation Group to which it currently belongs.
b) The identifier of the Aggregator associated with that Link Aggregation Group.
c) The status of interaction between the Frame Collection function of the Aggregator and the link (Collecting TRUE or Collecting FALSE). Collecting TRUE indicates that the receive function of this link is enabled with respect to its participation in an aggregation; i.e., received frames will be passed up to the Aggregator for collection.
d) The status of interaction between the Frame Distribution function of the Aggregator and the link (Distributing TRUE or Distributing FALSE). Distributing TRUE indicates that the transmit function of this link is enabled with respect to its participation in an aggregation; i.e., frames may be passed down from the Aggregator's distribution function for transmission.

This state information is communicated directly between Link Aggregation Control and the Aggregator through shared state variables without the use of a formal service interface.

The Link Aggregation Control function maintains the following information with respect to each Aggregator:

e) The status of the Frame Collection function (Receive Enabled or Receive Disabled).
f) The status of the Frame Distribution function (Transmit Enabled or Transmit Disabled).

These status values are exactly the logical OR of the Collection and Distribution status of the individual links associated with that Aggregator; i.e., if one or more links in the Link Aggregation Group are Collecting, then the Aggregator is Receive Enabled, and if one or more links are Distributing, then the Aggregator is Transmit Enabled.

The Transmit and Receive status of the Aggregator effectively govern the point at which the Aggregator becomes available for use by the MAC Client, or conversely, the point at which it ceases to be available.

Copyright © 2000 IEEE. All rights reserved.

Authorized licensed use limited to: N.C. State University Libraries - Acquisitions & Discovery S. Downloaded on November 14,2023 at 14:15:01 UTC from IEEE Xplore. Restrictions apply.

Cisco v. Corrigent - IPR2023-00447
Patent Owner Corrigent Exhibit 2012-0125

43.4 Link Aggregation Control Protocol (LACP)

The Link Aggregation Control Protocol (LACP) provides a standardized means for exchanging information between Partner Systems on a link to allow their Link Aggregation Control instances to reach agreement on the identity of the Link Aggregation Group to which the link belongs, move the link to that Link Aggregation Group, and enable its transmission and reception functions in an orderly manner.

43.4.1 LACP design elements

The following considerations were taken into account during the development of the protocol described in this subclause:

a) The protocol depends upon the transmission of information and state, rather than the transmission of commands. LACPDUs sent by the first party (the Actor) convey to the second party (the Actor's protocol Partner) what the Actor knows, both about its own state and that of the Partner.
b) The information conveyed in the protocol is sufficient to allow the Partner to determine what action to take next.
c) Active or passive participation in LACP is controlled by LACP_Activity, an administrative control associated with each port, that can take the value Active LACP or Passive LACP. Passive LACP indicates the port's preference for not transmitting LACPDUs unless its Partner's control value is Active LACP (i.e., a preference not to speak unless spoken to). Active LACP indicates the port's preference to participate in the protocol regardless of the Partner's control value (i.e., a preference to speak regardless).
d) Periodic transmission of LACPDUs occurs if the LACP_Activity control of either the Actor or the Partner is Active LACP. These periodic transmissions will occur at either a slow or fast transmission rate depending upon the expressed LACP_Timeout preference (Long Timeout or Short Timeout) of the Partner System.
e) In addition to periodic LACPDU transmissions, the protocol transmits LACPDUs when there is a Need To Transmit (NTT) something to the Partner; i.e., when the Actor's state changes or when it is apparent from the Partner's LACPDUs that the Partner does not know the Actor's current state.
f) The protocol assumes that the rate of LACPDU loss is very low.

There is no explicit frame loss detection/retry mechanism employed by the LACP; however, if information is received from the Partner indicating that it does not have up-to-date information on the Actor's state, or if the next periodic transmission is due, then the Actor will transmit a LACPDU that will correctly update the Partner.

43.4.2 LACPDU structure and encoding

43.4.2.1 Transmission and representation of octets

All LACPDUs comprise an integral number of octets. The bits in each octet are numbered from 0 to 7, where 0 is the low-order bit. When consecutive octets are used to represent a numerical value, the most significant octet is transmitted first, followed by successively less significant octets.

When the encoding of (an element of) a LACPDU is depicted in a diagram

a) Octets are transmitted from top to bottom.
b) Within an octet, bits are shown with bit 0 to the left and bit 7 to the right, and are transmitted from left to right.
c) When consecutive octets are used to represent a binary number, the octet transmitted first has the more significant value.

Copyright © 2000 IEEE. All rights reserved.
Authorized licensed use limited to: N.C. State University Libraries - Acquisitions & Discovery S. Downloaded on November 14,2023 at 14:15:01 UTC from IEEE Xplore. Restrictions apply.
Cisco v. Corrigent - IPR2023-00447
Patent Owner Corrigent Exhibit 2012-0126

d) When consecutive octets are used to represent a MAC address, the least significant bit of the first octet is assigned the value of the first bit of the MAC address, the next most significant bit the value of the second bit of the MAC address, and so on through the eighth bit. Similarly the least significant through most significant bits of the second octet are assigned the value of the ninth through seventeenth bits of the MAC address, and so on for all the octets of the MAC address.

43.4.2.2 LACPDU structure

LACPDUs are basic IEEE 802.3 frames; they shall not be tagged (See Clause 3). The LACPDU structure shall be as shown in Figure 43-7 and as further described in the following field definitions:

a) *Destination Address (DA)*. The DA in LACPDUs is the Slow_Protocols_Multicast address. Its use and encoding are specified in Annex 43B.

b) *Source Address (SA)*. The SA in LACPDUs carries the individual MAC address associated with the port through which the LACPDU is transmitted.

c) *Length/Type*. LACPDUs are always Type encoded, and carry the Slow_Protocols_Type field value. The use and encoding of this type is specified in Annex 43B.

d) *Subtype*. The Subtype field identifies the specific Slow Protocol being encapsulated. LACPDUs carry the Subtype value 0x01.

e) *Version Number*. This identifies the LACP version; implementations conformant to this version of the standard carry the value 0x01.

f) *TLV_type = Actor Information*. This field indicates the nature of the information carried in this TLV-tuple. Actor information is identified by the value 0x01.

g) *Actor_Information_Length*. This field indicates the length (in octets) of this TLV-tuple, Actor information uses a length value of 20 (0x14).

h) *Actor_System_Priority*. The priority assigned to this System (by management or administration policy), encoded as an unsigned integer.

i) *Actor_System*. The Actor's System ID, encoded as a MAC address.

j) *Actor_Key*. The operational Key value assigned to the port by the Actor, encoded as an unsigned integer.

k) *Actor_Port_Priority*. The priority assigned to this port by the Actor (the System sending the PDU; assigned by management or administration policy), encoded as an unsigned integer.

l) *Actor_Port*. The port number assigned to the port by the Actor (the System sending the PDU), encoded as an unsigned integer.

m) *Actor_State*. The Actor's state variables for the port, encoded as individual bits within a single octet, as follows and as illustrated in Figure 43-8:

   1) *LACP_Activity* is encoded in bit 0. This flag indicates the Activity control value with regard to this link. Active LACP is encoded as a 1; Passive LACP is encoded as a 0.

   2) *LACP_Timeout* is encoded in bit 1. This flag indicates the Timeout control value with regard to this link. Short Timeout is encoded as a 1; Long Timeout is encoded as a 0.

   3) *Aggregation* is encoded in bit 2. If TRUE (encoded as a 1), this flag indicates that the System considers this link to be *Aggregatable*; i.e., a potential candidate for aggregation. If FALSE (encoded as a 0), the link is considered to be *Individual*; i.e., this link can be operated only as an individual link.

   4) *Synchronization* is encoded in bit 3. If TRUE (encoded as a 1), the System considers this link to be *IN_SYNC*; i.e., it has been allocated to the correct Link Aggregation Group, the group has been associated with a compatible Aggregator, and the identity of the Link Aggregation Group is consistent with the System ID and operational Key information transmitted. If FALSE (encoded as a 0), then this link is currently *OUT_OF_SYNC;* i.e., it is not in the right Aggregation.

Copyright © 2000 IEEE. All rights reserved.

Authorized licensed use limited to: N.C. State University Libraries - Acquisitions & Discovery S. Downloaded on November 14,2023 at 14:15:01 UTC from IEEE Xplore. Restrictions apply.

Cisco v. Corrigent - IPR2023-00447
Patent Owner Corrigent Exhibit 2012-0127

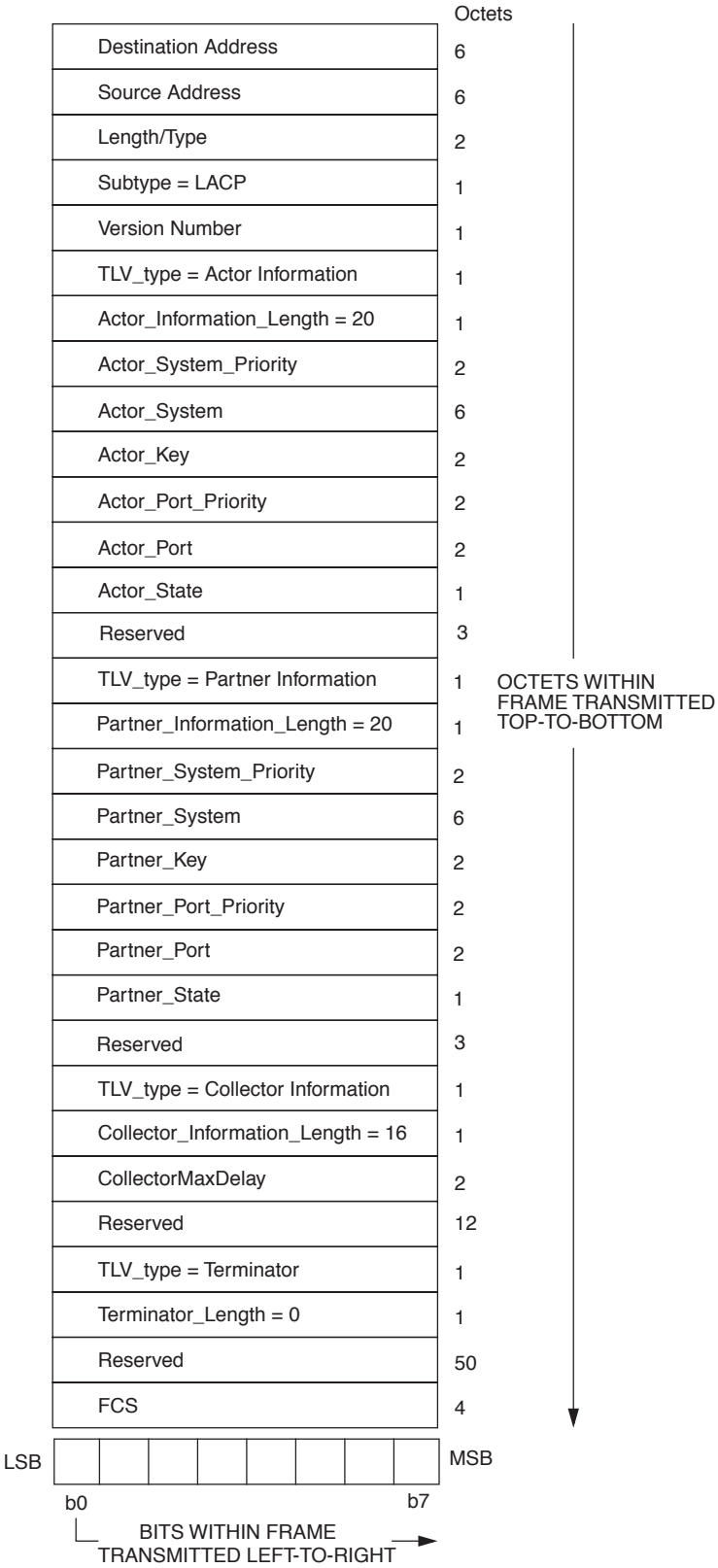

Figure 43-7—LACPDU structure

Copyright © 2000 IEEE. All rights reserved.
Authorized licensed use limited to: N.C. State University Libraries - Acquisitions & Discovery S. Downloaded on November 14,2023 at 14:15:01 UTC from IEEE Xplore. Restrictions apply.
Cisco v. Corrigent - IPR2023-00447
Patent Owner Corrigent Exhibit 2012-0128

5) *Collecting* is encoded in bit 4. TRUE (encoded as a 1) means collection of incoming frames on this link is definitely enabled; i.e., collection is currently enabled and is not expected to be disabled in the absence of administrative changes or changes in received protocol information. Its value is otherwise FALSE (encoded as a 0);
6) *Distributing* is encoded in bit 5. FALSE (encoded as a 0) means distribution of outgoing frames on this link is definitely disabled; i.e., distribution is currently disabled and is not expected to be enabled in the absence of administrative changes or changes in received protocol information. Its value is otherwise TRUE (encoded as a 1);
7) *Defaulted* is encoded in bit 6. If TRUE (encoded as a 1), this flag indicates that the Actor's Receive machine is using Defaulted operational Partner information, administratively configured for the Partner. If FALSE (encoded as a 0), the operational Partner information in use has been received in a LACPDU;
8) *Expired* is encoded in bit 7. If TRUE (encoded as a 1), this flag indicates that the Actor's Receive machine is in the EXPIRED state; if FALSE (encoded as a 0), this flag indicates that the Actor's Receive machine is not in the EXPIRED state.

NOTE—The received values of Defaulted and Expired state are not used by LACP; however, knowing their values can be useful when diagnosing protocol problems.

BIT 0	1	2	3	4	5	6	7
LACP_Activity	LACP_Timeout	Aggregation	Synchronization	Collecting	Distributing	Defaulted	Expired

NOTE—Bit ordering within this field is as specified in 43.4.2.1.

Figure 43-8—Bit encoding of the Actor_State and Partner_State fields

n) *Reserved*. These 3 octets are reserved for use in future extensions to the protocol. They shall be ignored on receipt and shall be transmitted as zeroes to claim compliance with Version 1 of this protocol.
o) *TLV_type = Partner Information*. This field indicates the nature of the information carried in this TLV-tuple. Partner information is identified by the integer value 0x02.
p) *Partner_Information_Length*. This field indicates the length (in octets) of this TLV-tuple, Partner information uses a length value of 20 (0x14).
q) *Partner_System_Priority*. The priority assigned to the Partner System (by management or administration policy), encoded as an unsigned integer.
r) *Partner_System*. The Partner's System ID, encoded as a MAC address.
s) *Partner_Key*. The operational Key value assigned to the port associated with this link by the Partner, encoded as an unsigned integer.
t) *Partner_Port_Priority*. The priority assigned to this port by the Partner (by management or administration policy), encoded as an unsigned integer.
u) *Partner_Port*. The port number associated with this link assigned to the port by the Partner, encoded as an unsigned integer.
v) *Partner_State*. The Actor's view of the Partner's state variables, depicted in Figure 43-8 and encoded as individual bits within a single octet, as defined for Actor_State.
w) *Reserved*. These 3 octets are reserved for use in future extensions to the protocol. They shall be ignored on receipt and shall be transmitted as zeroes to claim compliance with Version 1 of this protocol.
x) *TLV_type = Collector Information*. This field indicates the nature of the information carried in this TLV-tuple. Collector information is identified by the integer value 0x03.

Copyright © 2000 IEEE. All rights reserved.

Authorized licensed use limited to: N.C. State University Libraries - Acquisitions & Discovery S. Downloaded on November 14,2023 at 14:15:01 UTC from IEEE Xplore. Restrictions apply.
Cisco v. Corrigent - IPR2023-00447
Patent Owner Corrigent Exhibit 2012-0129

y) *Collector_Information_Length*. This field indicates the length (in octets) of this TLV-tuple. Collector information uses a length value of 16 (0x10).

z) *CollectorMaxDelay*. This field contains the value of CollectorMaxDelay (43.2.3.1.1) of the station transmitting the LACPDU, encoded as an unsigned integer number of tens of microseconds. The range of values for this parameter is 0 to 65 535 tens of microseconds (0.65535 seconds).

aa) *Reserved*. These 12 octets are reserved for use in future extensions to the protocol. They shall be ignored on receipt and shall be transmitted as zeroes to claim compliance with Version 1 of this protocol.

ab) *TLV_type = Terminator*. This field indicates the nature of the information carried in this TLV-tuple. Terminator (end of message) information is identified by the integer value 0x00.

ac) *Terminator_Length*. This field indicates the length (in octets) of this TLV-tuple. Terminator information uses a length value of 0 (0x00).

NOTE—The use of a Terminator_Length of 0 is intentional. In TLV encoding schemes it is common practice for the terminator encoding to be 0 both for the type and the length.

ad) *Reserved*. These 50 octets are reserved for use in future extensions to the protocol. They are ignored on receipt and are transmitted as zeroes to claim compliance with Version 1 of this protocol.

NOTE—The Reserved octets are included in all valid LACPDUs in order to force the TLV lengths to multiples of 4 octets, and to force a fixed PDU size of 128 octets, regardless of the version of the protocol. Hence, a Version 1 implementation is guaranteed to be able to receive version N PDUs successfully, although version N PDUs may contain additional information that cannot be interpreted (and will be ignored) by the Version 1 implementation. A crucial factor in ensuring backwards compatibility is that any future version of the protocol is required not to re-define the structure or semantics of information defined for the previous version; it may only add new information elements to the previous set. Hence, in a version N PDU, a Version 1 implementation can expect to find the Version 1 information in exactly the same places as in a Version 1 PDU, and can expect to interpret that information as defined for Version 1. Future versions of this protocol expect to have the Reserved octets available for their use.

ae) *FCS*. This field is the Frame Check Sequence, typically generated by the underlying MAC.

43.4.3 LACP state machine overview

The operation of the protocol is controlled by a number of state machines, each of which performs a distinct function. These state machines are for the most part described on a per-port basis; any deviations from per-port description are highlighted in the text. Events (such as expiration of a timer or received LACPDUs) may cause state transitions and also cause actions to be taken; those actions may include the need for transmission of a LACPDU containing repeated or new information. Periodic and event-driven transmissions are controlled by the state of a Need-To-Transmit (NTT) variable (see 43.4.7), generated by the state machines as necessary.

The state machines are as follows:

a) *Receive machine (RX—43.4.12)*. This state machine receives LACPDUs from the Partner, records the information contained, and times it out using either Short Timeouts or Long Timeouts, according to the setting of LACP_Timeout. It evaluates the incoming information from the Partner to determine whether the Actor and Partner have both agreed upon the protocol information exchanged to the extent that the port can now be safely used, either in an aggregation with other ports or as an individual port; if not, it asserts NTT in order to transmit fresh protocol information to the Partner. If the protocol information from the Partner times out, the Receive machine installs default parameter values for use by the other state machines.

b) *Periodic Transmission machine (43.4.13)*. This state machine determines whether the Actor and its Partner will exchange LACPDUs periodically in order to maintain an aggregation (periodic LACPDU exchanges occur if either or both are configured for Active LACP).

c) *Selection Logic (43.4.14)*. The Selection Logic is responsible for selecting the Aggregator to be associated with this port.

Copyright © 2000 IEEE. All rights reserved.
Authorized licensed use limited to: N.C. State University Libraries - Acquisitions & Discovery S. Downloaded on November 14,2023 at 14:15:01 UTC from IEEE Xplore. Restrictions apply.
Cisco v. Corrigent - IPR2023-00447
Patent Owner Corrigent Exhibit 2012-0130

d) *Mux machine (MUX—43.4.15)*. This state machine is responsible for attaching the port to a selected Aggregator, detaching the port from a de-selected Aggregator, and for turning collecting and distributing at the port on or off as required by the current protocol information.

e) *Transmit machine (TX—43.4.16)*. This state machine handles the transmission of LACPDUs, both on demand from the other state machines, and on a periodic basis.

Figure 43-9 illustrates the relationships among these state machines and the flow of information between them. The set of arrows labelled Partner State Information represents new Partner information, contained in an incoming LACPDU or supplied by administrative default values, being fed to each state machine by the Receive machine. The set of arrows labelled Actor State Information represents the flow of updated Actor state information between the state machines. Transmission of LACPDUs occurs either as a result of the Periodic machine determining the need to transmit a periodic LACPDU, or as a result of changes to the Actor's state information that need to be communicated to the Partner. The need to transmit a LACPDU is signalled to the Transmit machine by asserting NTT. The remaining arrows represent shared variables in the state machine description that allow a state machine to cause events to occur in another state machine.

NOTE—The arrows marked Ready_N show that information derived from the operation of another port or ports can affect the operation of a port's state machine. See the definition of the Ready and Ready_N variables in 43.4.8.

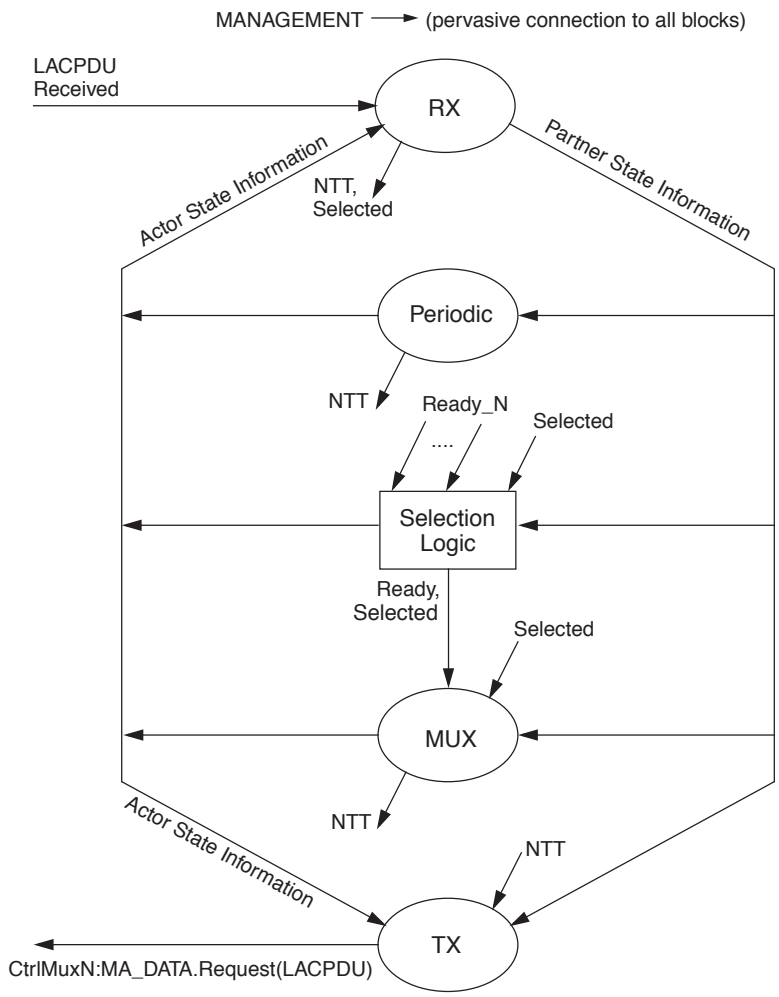

Figure 43-9—Interrelationships among state machines

Copyright © 2000 IEEE. All rights reserved.

Authorized licensed use limited to: N.C. State University Libraries - Acquisitions & Discovery S. Downloaded on November 14,2023 at 14:15:01 UTC from IEEE Xplore. Restrictions apply.
Cisco v. Corrigent - IPR2023-00447
Patent Owner Corrigent Exhibit 2012-0131

Two further state machines are defined for diagnostic purposes. They are as follows:

f) *Actor and Partner Churn Detection machines (43.4.17)*. These state machines make use of the IN_SYNC and OUT_OF_SYNC states generated by the Actor and Partner Mux machines in order to detect the situation where the state machines are unable to resolve the state of a given link; e.g., because the Partner System repeatedly sends conflicting information in its LACPDUs. As this situation can occur in a normally functioning link, particularly where either or both participating Systems have constrained aggregation capability (see 43.6), these state machines simply detect the presence of such a condition and signal its existence to management.

43.4.4 Constants

All timers specified in this subclause have an implementation tolerance of ± 250 ms.

Fast_Periodic_Time
The number of seconds between periodic transmissions using Short Timeouts.
Value: Integer
1

Slow_Periodic_Time
The number of seconds between periodic transmissions using Long Timeouts.
Value: Integer
30

Short_Timeout_Time
The number of seconds before invalidating received LACPDU information when using Short Timeouts (3 x Fast_Periodic_Time).
Value: Integer
3

Long_Timeout_Time
The number of seconds before invalidating received LACPDU information when using Long Timeouts (3 x Slow_Periodic_Time).
Value: Integer
90

Churn_Detection_Time
The number of seconds that the Actor and Partner Churn state machines wait for the Actor or Partner Sync state to stabilize.
Value: Integer
60

Aggregate_Wait_Time
The number of seconds to delay aggregation, to allow multiple links to aggregate simultaneously.
Value: Integer
2

43.4.5 Variables associated with the System

Actor_System
The MAC address component of the System Identifier of the System.
Value: 48 bits
Assigned by administrator or System policy.

Copyright © 2000 IEEE. All rights reserved.
Authorized licensed use limited to: N.C. State University Libraries - Acquisitions & Discovery S. Downloaded on November 14,2023 at 14:15:01 UTC from IEEE Xplore. Restrictions apply.
Cisco v. Corrigent - IPR2023-00447
Patent Owner Corrigent Exhibit 2012-0132

Actor_System_Priority
The System Priority of the System.
Value: Integer
Assigned by administrator or System policy.

43.4.6 Variables associated with each Aggregator

Aggregator_MAC_address
The MAC address assigned to the Aggregator.
Value: 48 bits
Assigned by administrator or System policy.

Aggregator_Identifier
Used to uniquely identify an Aggregator within a System.
Value: Integer
Assigned by administrator or System policy.

Individual_Aggregator
The aggregation capability of the Aggregator.
Value: Boolean
TRUE if the port attached to this Aggregator is not capable of aggregation with any other port.
FALSE if the port(s) attached to this Aggregator are capable of aggregation with other ports.

Actor_Admin_Aggregator_Key
The administrative Key value associated with the Aggregator.
Value: Integer
Assigned by administrator or System policy.

Actor_Oper_Aggregator_Key
The operational Key value associated with the Aggregator.
Value: Integer
Assigned by the Actor.

Partner_System
The MAC address component of the System Identifier of the remote System to which the Aggregator is connected. If the Aggregator has no attached ports, this variable is set to 0x00-00-00-00-00-00.
Value: 48 bits

Partner_System_Priority
The System Priority of the remote System to which the Aggregator is connected. If the Aggregator has no attached ports, this variable is set to zero.
Value: Integer

Partner_Oper_Aggregator_Key
The operational Key assigned to an aggregation by the remote System to which this Aggregator is connected. If the Aggregator has no attached ports, this variable is set to zero.
Value: Integer

Copyright © 2000 IEEE. All rights reserved.

Authorized licensed use limited to: N.C. State University Libraries - Acquisitions & Discovery S. Downloaded on November 14,2023 at 14:15:01 UTC from IEEE Xplore. Restrictions apply.

Cisco v. Corrigent - IPR2023-00447
Patent Owner Corrigent Exhibit 2012-0133

Receive_State
The Receive_State of the Aggregator will be Enabled if one or more ports attached to the Aggregator are Collecting (i.e., Actor_Oper_Port_State.Collecting is TRUE for any port). Otherwise, Receive_State is Disabled.
Values: Enabled or Disabled

Transmit_State
The Transmit_State of the Aggregator will be Enabled if one or more ports attached to the Aggregator are Distributing (i.e., Actor_Oper_Port_State.Distributing is TRUE for any port). Otherwise, Transmit_State is Disabled.
Values: Enabled or Disabled

LAG_Ports
The set of ports that belong to the Link Aggregation Group.
Value: Integer Array

43.4.7 Variables associated with each port

Actor_Port_Number
The port number assigned to the port.
Value: Integer
Assigned by administrator or System policy.

Actor_Port_Priority
The priority value assigned to the port, used to converge dynamic Key changes.
Value: Integer
Assigned by administrator or System policy.

Actor_Port_Aggregator_Identifier
The identifier of the Aggregator that this port is attached to.
Value: Integer

NTT
Need To Transmit flag.
Value: Boolean
TRUE indicates that there is new protocol information that should be transmitted on the link, or that the Partner needs to be reminded of the old information.
FALSE otherwise.

Actor_Admin_Port_Key
The administrative value of Key assigned to this port by administrator or System policy.
Value: Integer

Actor_Oper_Port_Key
The operational value of Key assigned to this port by the Actor.
Value: Integer

Actor_Admin_Port_State
The administrative values of the Actor's state parameters. This consists of the following set of variables, as described in 43.4.2.2:
LACP_Activity
LACP_Timeout
Aggregation
Synchronization

Copyright © 2000 IEEE. All rights reserved.
Authorized licensed use limited to: N.C. State University Libraries - Acquisitions & Discovery S. Downloaded on November 14,2023 at 14:15:01 UTC from IEEE Xplore. Restrictions apply.
Cisco v. Corrigent - IPR2023-00447
Patent Owner Corrigent Exhibit 2012-0134

Collecting
Distributing
Defaulted
Expired
Value: 8 bits

Actor_Oper_Port_State
The operational values of the Actor's state parameters. This consists of the following set of variables, as described in 43.4.2.2:
LACP_Activity
LACP_Timeout
Aggregation
Synchronization
Collecting
Distributing
Defaulted
Expired
Value: 8 bits

Partner_Admin_System
Default value for the MAC address component of the System Identifier of the Partner, assigned by administrator or System policy for use when the Partner's information is unknown or expired.
Value: 48 bits

Partner_Oper_System
The operational value of the MAC address component of the System Identifier of the Partner. The Actor sets this variable either to the value received from the Partner in an LACPDU, or to the value of Partner_Admin_System.
Value: 48 bits

Partner_Admin_System_Priority
Default value for the System Priority component of the System Identifier of the Partner, assigned by administrator or System policy for use when the Partner's information is unknown or expired.
Value: Integer

Partner_Oper_System_Priority
The operational value of the System Priority of the Partner. The Actor sets this variable either to the value received from the Partner in an LACPDU, or to the value of Partner_Admin_System_Priority.
Value: Integer

Partner_Admin_Key
Default value for the Partner's Key, assigned by administrator or System policy for use when the Partner's information is unknown or expired.
Value: Integer

Partner_Oper_Key
The operational value of the Key value assigned to this link by the Partner. The Actor sets this variable either to the value received from the Partner in an LACPDU, or to the value of Partner_Admin_Key.
Value: Integer

Copyright © 2000 IEEE. All rights reserved.

Authorized licensed use limited to: N.C. State University Libraries - Acquisitions & Discovery S. Downloaded on November 14,2023 at 14:15:01 UTC from IEEE Xplore. Restrictions apply.

Cisco v. Corrigent - IPR2023-00447
Patent Owner Corrigent Exhibit 2012-0135

Partner_Admin_Port_Number
Default value for the Port Number component of the Partner's Port Identifier, assigned by administrator or System policy for use when the Partner's information is unknown or expired.
Value: Integer

Partner_Oper_Port_Number
The operational value of the port number assigned to this link by the Partner. The Actor sets this variable either to the value received from the Partner in an LACPDU, or to the value of Partner_Admin_Port_Number.
Value: Integer

Partner_Admin_Port_Priority
Default value for the Port Priority component of the Partner's Port Identifier, assigned by administrator or System policy for use when the Partner's information is unknown or expired.
Value: Integer

Partner_Oper_Port_Priority
The operational value of the priority value assigned to this link by the Partner, used to converge dynamic Key changes. The Actor sets this variable either to the value received from the Partner in an LACPDU, or to the value of Partner_Admin_Port_Priority.
Value: Integer

Partner_Admin_Port_State
Default value for the Partner's state parameters, assigned by administrator or System policy for use when the Partner's information is unknown or expired. The value consists of the following set of variables, as described in 43.4.2.2:
LACP_Activity
LACP_Timeout
Aggregation
Synchronization
Collecting
Distributing
Defaulted
Expired
The value of Collecting shall be set the same as the value of Synchronization.
Value: 8 bits

Partner_Oper_Port_State
The operational value of the Actor's view of the current values of the Partner's state parameters. The Actor sets this variable either to the value received from the Partner in an LACPDU, or to the value of Partner_Admin_Port_State. The value consists of the following set of variables, as described in 43.4.2.2:
LACP_Activity
LACP_Timeout
Aggregation
Synchronization
Collecting
Distributing
Defaulted
Expired
Value: 8 bits

Copyright © 2000 IEEE. All rights reserved.
Authorized licensed use limited to: N.C. State University Libraries - Acquisitions & Discovery S. Downloaded on November 14,2023 at 14:15:01 UTC from IEEE Xplore. Restrictions apply.
Cisco v. Corrigent - IPR2023-00447
Patent Owner Corrigent Exhibit 2012-0136

port_enabled

A variable indicating that the physical layer has indicated that the link has been established and the port is operable.

Value: Boolean

TRUE if the physical layer has indicated that the port is operable.

FALSE otherwise.

NOTE—The means by which the value of the port_enabled variable is generated by the underlying MAC and/or PHY is implementation-dependent.

43.4.8 Variables used for managing the operation of the state machines

BEGIN

This variable indicates the initialization (or reinitialization) of the LACP protocol entity. It is set to TRUE when the System is initialized or reinitialized, and is set to FALSE when (re-)initialization has completed.

Value: Boolean

LACP_Enabled

This variable indicates that the port is operating the LACP. If the port is operating in half duplex, the value of LACP_Enabled shall be FALSE. Otherwise, the value of LACP_Enabled shall be TRUE.

Value: Boolean

actor_churn

This variable indicates that the Actor Churn Detection machine has detected that a local port configuration has failed to converge within a specified time, and that management intervention is required.

Value: Boolean

partner_churn

This variable indicates that the Partner Churn Detection machine has detected that a remote port configuration has failed to converge within a specified time, and that management intervention is required.

Value: Boolean

Ready_N

The port asserts Ready_N TRUE to indicate to the Selection Logic that the wait_while_timer has expired and it is waiting (i.e., the port is in the WAITING state) to attach to an Aggregator. Otherwise, its value is FALSE. There is one Ready_N value for each port.

Value: Boolean

Ready

The Selection Logic asserts Ready TRUE when the values of Ready_N for all ports that are waiting to attach to a given Aggregator are TRUE. If any of the values of Ready_N for the ports that are waiting to attach to that Aggregator are FALSE, or if there are no ports waiting to attach to that Aggregator, then the value of Ready is FALSE.

Value: Boolean

Selected

A value of SELECTED indicates that the Selection Logic has selected an appropriate Aggregator. A value of UNSELECTED indicates that no aggregator is currently selected. A value of STANDBY indicates that although the Selection Logic has selected an appropriate Aggregator, aggregation restrictions currently prevent the port from being enabled as part of the aggrega-

Copyright © 2000 IEEE. All rights reserved.

Authorized licensed use limited to: N.C. State University Libraries - Acquisitions & Discovery S. Downloaded on November 14,2023 at 14:15:01 UTC from IEEE Xplore. Restrictions apply.

Cisco v. Corrigent - IPR2023-00447
Patent Owner Corrigent Exhibit 2012-0137

tion, and so the port is being held in a standby condition. This variable can only be set to SELECTED or STANDBY by the operation of the port's Selection Logic. It can be set to UNSELECTED by the operation of the port's Receive machine, or by the operation of the Selection Logic associated with another port.

NOTE—Setting Selected UNSELECTED in the Selection Logic associated with another port occurs if the Selection Logic determines that the other port has a stronger claim to attach to this port's current Aggregator.

Value: SELECTED, UNSELECTED, or STANDBY

port_moved
This variable is set to TRUE if the Receive machine for a port is in the PORT_DISABLED state, and the combination of Partner_Oper_System and Partner_Oper_Port_Number in use by that port has been received in an incoming LACPDU on a different port. This variable is set to FALSE once the INITIALIZE state of the Receive machine has set the Partner information for the port to administrative default values.
Value: Boolean

43.4.9 Functions

recordPDU
This function records the parameter values for the Actor carried in a received LACPDU (Actor_Port, Actor_Port_Priority, Actor_System, Actor_System_Priority, Actor_Key, and Actor_State variables) as the current Partner operational parameter values (Partner_Oper_Port_Number, Partner_Oper_Port_Priority, Partner_Oper_System, Partner_Oper_System_Priority, Partner_Oper_Key, and Partner_Oper_Port_State variables with the exception of Synchronization) and sets Actor_Oper_Port_State.Defaulted to FALSE.

This function also updates the value of the Partner_Oper_Port_State.Synchronization using the parameter values carried in received LACPDUs. Parameter values for the Partner carried in the received PDU (Partner_Port, Partner_Port_Priority, Partner_System, Partner_System_Priority, Partner_Key, and Partner_State.Aggregation) are compared to the corresponding operational parameter values for the Actor (Actor_Port_Number, Actor_Port_Priority, Actor_System, Actor_System_Priority, Actor_Oper_Port_Key, and Actor_Oper_Port_State.Aggregation). Partner_Oper_Port_State.Synchronization is set to TRUE if all of these parameters match, Actor_State.Synchronization in the received PDU is set to TRUE, and LACP will actively maintain the link in the aggregation.

Partner_Oper_Port_State.Synchronization is also set to TRUE if the value of Actor_State.Aggregation in the received PDU is set to FALSE (i.e., indicates an Individual link), Actor_State.Synchronization in the received PDU is set to TRUE, and LACP will actively maintain the link.

Otherwise, Partner_Oper_Port_State.Synchronization is set to FALSE.

LACP is considered to be actively maintaining the link if either the PDU's Actor_State.LACP_Activity variable is TRUE or both the Actor's Actor_Oper_Port_State.LACP_Activity and the PDU's Partner_State.LACP_Activity variables are TRUE.

recordDefault
This function records the default parameter values for the Partner carried in the Partner Admin parameters (Partner_Admin_Port_Number, Partner_Admin_Port_Priority, Partner_Admin_System, Partner_Admin_System_Priority, Partner_Admin_Key, and

Copyright © 2000 IEEE. All rights reserved.
Authorized licensed use limited to: N.C. State University Libraries - Acquisitions & Discovery S. Downloaded on November 14,2023 at 14:15:01 UTC from IEEE Xplore. Restrictions apply.
Cisco v. Corrigent - IPR2023-00447
Patent Owner Corrigent Exhibit 2012-0138

Partner_Admin_Port_State) as the current Partner operational parameter values (Partner_Oper_Port_Number, Partner_Oper_Port_Priority, Partner_Oper_System, Partner_Oper_System_Priority, Partner_Oper_Key, and Partner_Oper_Port_State) and sets Actor_Oper_Port_State.Defaulted to TRUE.

update_Selected

This function updates the value of the Selected variable, using parameter values from a newly received LACPDU. The parameter values for the Actor carried in the received PDU (Actor_Port, Actor_Port_Priority, Actor_System, Actor_System_Priority, Actor_Key, and Actor_State.Aggregation) are compared with the corresponding operational parameter values for the port's Partner (Partner_Oper_Port_Number, Partner_Oper_Port_Priority, Partner_Oper_System, Partner_Oper_System_Priority, Partner_Oper_Key, and Partner_Oper_Port_State.Aggregation). If one or more of the comparisons show that the value(s) received in the PDU differ from the current operational values, then Selected is set to UNSELECTED. Otherwise, Selected remains unchanged.

update_Default_Selected

This function updates the value of the Selected variable, using the Partner administrative parameter values. The administrative values (Partner_Admin_Port_Number, Partner_Admin_Port_Priority, Partner_Admin_System, Partner_Admin_System_Priority, Partner_Admin_Key, and Partner_Admin_Port_State.Aggregation) are compared with the corresponding operational parameter values for the Partner (Partner_Oper_Port_Number, Partner_Oper_Port_Priority, Partner_Oper_System, Partner_Oper_System_Priority, Partner_Oper_Key, and Partner_Oper_Port_State.Aggregation). If one or more of the comparisons shows that the administrative value(s) differ from the current operational values, then Selected is set to UNSELECTED. Otherwise, Selected remains unchanged.

update_NTT

This function updates the value of the NTT variable, using parameter values from a newly received LACPDU. The parameter values for the Partner carried in the received PDU (Partner_Port, Partner_Port_Priority, Partner_System, Partner_System_Priority, Partner_Key, Partner_State.LACP_Activity, Partner_State.LACP_Timeout, Partner_State.Synchronization, and Partner_State.Aggregation) are compared with the corresponding operational parameter values for the Actor (Actor_Port_Number, Actor_Port_Priority, Actor_System, Actor_System_Priority, Actor_Oper_Port_Key, Actor_Oper_Port_State.LACP_Activity, Actor_Oper_Port_State.LACP_Timeout, Actor_Oper_Port_State.Synchronization, and Actor_Oper_Port_State.Aggregation). If one or more of the comparisons show that the value(s) received in the PDU differ from the current operational values, then NTT is set to TRUE. Otherwise, NTT remains unchanged.

Attach_Mux_To_Aggregator

This function causes the port's Control Parser/Multiplexer to be attached to the Aggregator Parser/Multiplexer of the selected Aggregator, in preparation for collecting and distributing frames.

Detach_Mux_From_Aggregator

This function causes the port's Control Parser/Multiplexer to be detached from the Aggregator Parser/Multiplexer of the Aggregator to which the port is currently attached.

Enable_Collecting

This function causes the Aggregator Parser of the Aggregator to which the port is attached to start collecting frames from the port.

Copyright © 2000 IEEE. All rights reserved.

Authorized licensed use limited to: N.C. State University Libraries - Acquisitions & Discovery S. Downloaded on November 14,2023 at 14:15:01 UTC from IEEE Xplore. Restrictions apply.

Cisco v. Corrigent - IPR2023-00447
Patent Owner Corrigent Exhibit 2012-0139

Disable_Collecting
This function causes the Aggregator Parser of the Aggregator to which the port is attached to stop collecting frames from the port.

Enable_Distributing
This function causes the Aggregator Multiplexer of the Aggregator to which the port is attached to start distributing frames to the port.

Disable_Distributing
This function causes the Aggregator Multiplexer of the Aggregator to which the port is attached to stop distributing frames to the port.

Enable_Collecting_Distributing
This function causes the Aggregator Parser of the Aggregator to which the port is attached to start collecting frames from the port, and the Aggregator Multiplexer to start distributing frames to the port.

Disable_Collecting_Distributing
This function causes the Aggregator Parser of the Aggregator to which the port is attached to stop collecting frames from the port, and the Aggregator Multiplexer to stop distributing frames to the port.

43.4.10 Timers

current_while_timer
This timer is used to detect whether received protocol information has expired. If Actor_Oper_State.LACP_Timeout is set to Short Timeout, the timer is started with the value Short_Timeout_Time. Otherwise, it is started with the value Long_Timeout_Time (see 43.4.4).

actor_churn_timer
This timer is used to detect Actor churn states. It is started using the value Churn_Detection_Time (see 43.4.4).

periodic_timer (time_value)
This timer is used to generate periodic transmissions. It is started using the value Slow_Periodic_Time or Fast_Periodic_Time (see 43.4.4), as specified in the Periodic Transmission state machine.

partner_churn_timer
This timer is used to detect Partner churn states. It is started using the value Churn_Detection_Time (see 43.4.4).

wait_while_timer
This timer provides hysteresis before performing an aggregation change, to allow all links that will join this Aggregation to do so. It is started using the value Aggregate_Wait_Time (see 43.4.4).

43.4.11 Messages

CtrlMuxN:MA_DATA.indicate(LACPDU)
This message is generated by the Control Parser as a result of the reception of a LACPDU, formatted as defined in 43.4.2.

Copyright © 2000 IEEE. All rights reserved.
Authorized licensed use limited to: N.C. State University Libraries - Acquisitions & Discovery S. Downloaded on November 14,2023 at 14:15:01 UTC from IEEE Xplore. Restrictions apply.
Cisco v. Corrigent - IPR2023-00447
Patent Owner Corrigent Exhibit 2012-0140

43.4.12 Receive machine

The Receive machine shall implement the function specified in Figure 43-10 with its associated parameters (43.4.4 through 43.4.11).

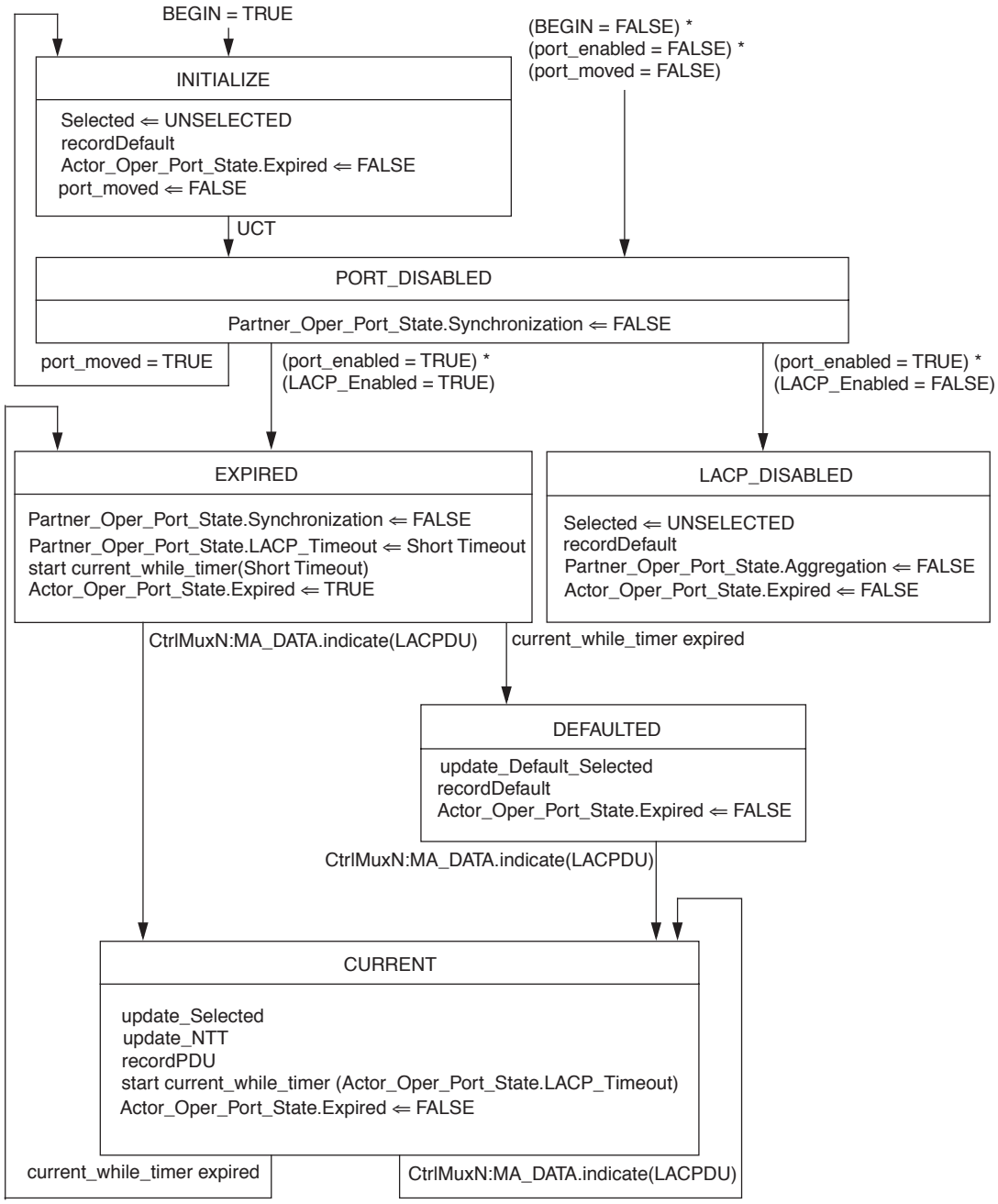

Figure 43-10—Receive machine state diagram

Copyright © 2000 IEEE. All rights reserved.

Authorized licensed use limited to: N.C. State University Libraries - Acquisitions & Discovery S. Downloaded on November 14,2023 at 14:15:01 UTC from IEEE Xplore. Restrictions apply.
Cisco v. Corrigent - IPR2023-00447
Patent Owner Corrigent Exhibit 2012-0141

On receipt of a LACPDU, the state machine enters the CURRENT state. The update_Selected function sets the Selected variable UNSELECTED if the Link Aggregation Group identified by the combination of the protocol Partner's own information and the Actor's own information has changed. The Selected variable is used by the Mux machine (43.4.15).

NOTE—The Receive machine may set the Selected variable to UNSELECTED; however, setting this variable to SELECTED or STANDBY is the responsibility of the Selection Logic.

The update_NTT function is used to determine whether further protocol transmissions are required; NTT is set to TRUE if the Partner's view of the Actor's operational parameters is not up to date. The recordPDU function records the information contained in the LACPDU in the Partner operational variables, and the current_while timer is started. The value used to start the timer is either Short_Timeout_Time or Long_Timeout_Time, depending upon the Actor's operational value of LACP_Timeout.

In the process of executing the recordPDU function, a Receive machine compliant to this standard shall not validate the Version Number, TLV_type, or Reserved fields in received LACPDUs. The same actions are taken regardless of the values received in these fields. A Receive machine may validate the Actor_Information_Length, Partner_Information_Length, Collector_Information_Length, or Terminator_Length fields. These behaviors, together with the constraint on future protocol enhancements, are discussed in 43.4.2.2.

NOTE—The rules expressed above allow Version 1 devices to be compatible with future revisions of the protocol.

If no LACPDU is received before the current_while timer expires, the state machine transits to the EXPIRED state. The Partner_Oper_Port_State.Synchronization variable is set to FALSE, the current operational value of the Partner's LACP_Timeout variable is set to Short Timeout, and the current_while timer is started with a value of Short_Timeout_Time. This is a transient state; the LACP_Timeout settings allow the Actor to transmit LACPDUs rapidly in an attempt to re-establish communication with the Partner.

If no LACPDU is received before the current_while timer expires again, the state machine transits to the DEFAULTED state. The recordDefault function overwrites the current operational parameters for the Partner with administratively configured values. This allows configuration of aggregations and individual links when no protocol Partner is present, while still permitting an active Partner to override default settings. The update_Default_Selected function sets the Selected variable UNSELECTED if the Link Aggregation Group has changed. Since all operational parameters are now set to locally administered values, there can be no disagreement as to the Link Aggregation Group, so the Partner_Oper_Port_State.Synchronization variable is set to TRUE.

If the port becomes inoperable and a BEGIN event has not occurred, the state machine enters the PORT_DISABLED state. Partner_Oper_Port_State.Synchronization is set to FALSE. This state allows the current Selection state to remain undisturbed, so that, in the event that the port is still connected to the same Partner and Partner port when it becomes operable again, there will be no disturbance caused to higher layers by unneccessary re-configuration. If the same Actor System ID and Port are seen in a LACPDU received on a different Port (port_moved is set to TRUE), this indicates that the physical connectivity has changed, and causes the state machine to enter the INITIALIZE state. This state is also entered if a BEGIN event occurs.

The INITIALIZE state causes the administrative values of the Partner parameters to be used as the current operational values, and sets Selected to UNSELECTED. These actions force the Mux machine to detach the port from its current Aggregator. The variable port_moved is set to FALSE; if the entry to INITIALIZE occurred as a result of port_moved being set to TRUE, then the state machine will immediately transition back to the PORT_DISABLED state.

Copyright © 2000 IEEE. All rights reserved.
Authorized licensed use limited to: N.C. State University Libraries - Acquisitions & Discovery S. Downloaded on November 14,2023 at 14:15:01 UTC from IEEE Xplore. Restrictions apply.
Cisco v. Corrigent - IPR2023-00447
Patent Owner Corrigent Exhibit 2012-0142

If the port is operating in half duplex, the operation of LACP is disabled on the port (LACP_Enabled is FALSE) and the LACP_DISABLED state is entered. This state is entered following a BEGIN or Port Enabled event. This state is similar to the DEFAULTED state, except that the port is forced to operate as an Individual port, as the value of Partner_Oper_Port_State.Aggregation is forced to Individual. Exit from this state occurs on a BEGIN or Port Disabled event.

43.4.13 Periodic Transmission machine

The Periodic Transmission machine shall implement the function specified in Figure 43-11 with its associated parameters (43.4.4 through 43.4.11).

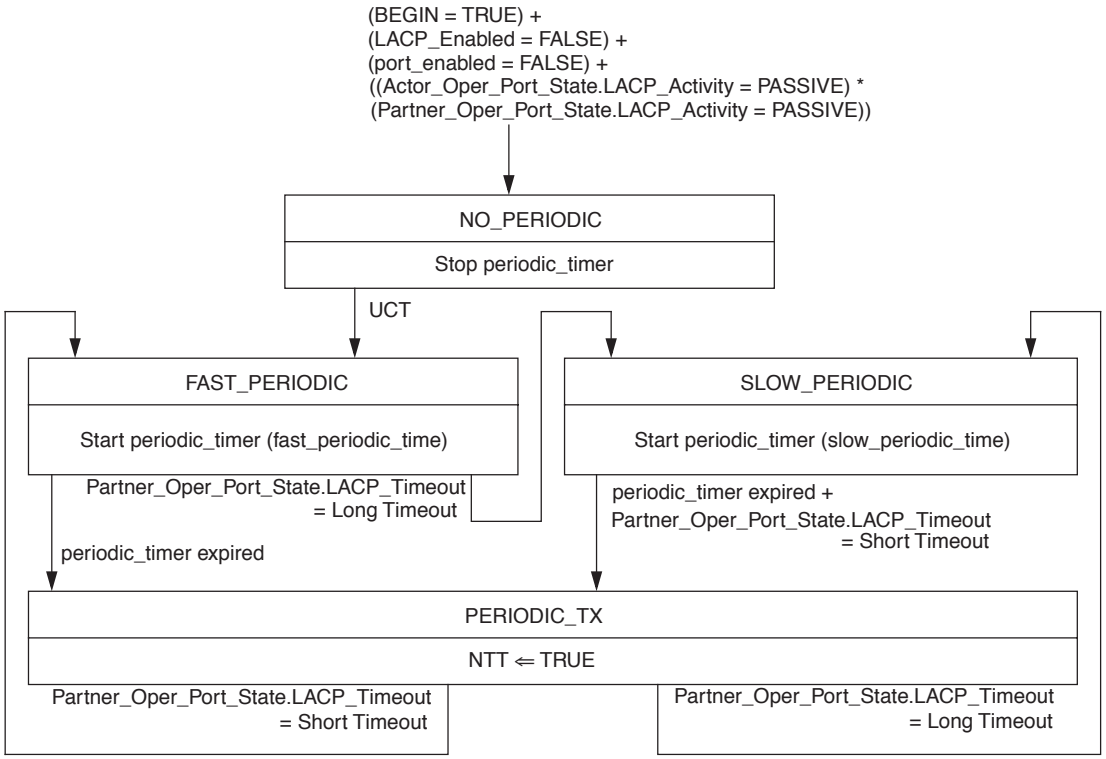

Figure 43-11—Periodic Transmission machine state diagram

The Periodic Transmission machine establishes the desire of the Actor and Partner to exchange periodic LACPDUs on the link in order to maintain an aggregation, and establishes how often those periodic transmissions should occur. Periodic transmissions will take place if either participant so wishes. Transmissions occur at a rate determined by the Partner; this rate is linked to the speed at which the Partner will time out received information.

The state machine has four states. They are as follows:

a) *NO_PERIODIC*. While in this state, periodic transmissions are disabled.
b) *FAST_PERIODIC*. While in this state, periodic transmissions are enabled at a fast transmission rate.
c) *SLOW_PERIODIC*. While in this state, periodic transmissions are enabled at a slow transmission rate.
d) *PERIODIC_TX*. This is a transitory state entered on periodic_timer expiry, that asserts NTT and then exits to FAST_PERIODIC or SLOW_PERIODIC depending upon the Partner's LACP_Timeout setting.

Copyright © 2000 IEEE. All rights reserved.

Authorized licensed use limited to: N.C. State University Libraries - Acquisitions & Discovery S. Downloaded on November 14,2023 at 14:15:01 UTC from IEEE Xplore. Restrictions apply.
Cisco v. Corrigent - IPR2023-00447
Patent Owner Corrigent Exhibit 2012-0143

The values of Partner_Oper_Port_State.LACP_Activity and Actor_Oper_Port_State.LACP_Activity determine whether periodic transmissions take place. If either or both parameters are set to Active LACP, then periodic transmissions occur; if both are set to Passive LACP, then periodic transmissions do not occur. Similarly, if either of the LACP_Enabled or port_enabled variables is set to FALSE, indicating that LACP has been disabled on the port or that the port is non-operational, then no periodic transmissions take place.

If periodic transmissions are enabled, the rate at which they take place is determined by the value of the Partner_Oper_Port_State.LACP_Timeout variable. If this variable is set to Short Timeout, then the value fast_periodic_time is used to determine the time interval between periodic transmissions. Otherwise, slow_periodic_time is used to determine the time interval.

43.4.14 Selection Logic

The Selection Logic selects a compatible Aggregator for a port, using the port's LAG ID. The Selection Logic may determine that the link should be operated as a standby link if there are constraints on the simultaneous attachment of ports that have selected the same Aggregator.

NOTE—There will never be more than one Aggregator with the same LAG ID, but there may be none. Normally, the latter will be a temporary state, caused by the fact that it takes a finite time for ports to be moved to the correct aggregators during reconfiguration.

The Mux machine controls the process of attaching the port to a selected Aggregator, after first detaching the port from any prior Aggregator if the port's LAG ID has changed.

NOTE—A port is always detached from its prior Aggregator when the LAG ID changes, even if the same Aggregator is selected later; to do otherwise would be to risk misdelivery of frames. Selection of a new Aggregator cannot take place until the port is detached from any prior Aggregator; other Aggregators may become free while the port is detaching, and other ports may attach to some of the available Aggregators during this time interval.

The operation of the Selection Logic is separated into the following two subclauses:

a) The requirements for the correct operation of the Selection Logic are defined in 43.4.14.1.
b) The recommended default operation of the Selection Logic is described in 43.4.14.2.

This separation reflects the fact that a wide choice of selection rules is possible within the proper operation of the protocol. An implementation that claims conformance to this standard may support selection rules other than the recommended default; however, any such rules shall meet the requirements stated in 43.4.14.1.

43.4.14.1 Selection Logic—Requirements

Aggregation is represented by a port selecting an appropriate Aggregator, and then attaching to that Aggregator. The following are required for correct operation of the selection and attachment logic:

a) The implementation shall support at least one Aggregator per System.
b) Each port shall be assigned an operational Key (43.3.5). Ports that can aggregate together are assigned the same operational Key as the other ports with which they can aggregate; ports that cannot aggregate with any other port are allocated unique operational Keys.
c) Each Aggregator shall be assigned an operational Key.
d) Each Aggregator shall be assigned an identifier that distinguishes it among the set of Aggregators in the System.
e) A port shall only select an Aggregator that has the same operational Key assignment as its own operational Key.

Copyright © 2000 IEEE. All rights reserved.
Authorized licensed use limited to: N.C. State University Libraries - Acquisitions & Discovery S. Downloaded on November 14,2023 at 14:15:01 UTC from IEEE Xplore. Restrictions apply.
Cisco v. Corrigent - IPR2023-00447
Patent Owner Corrigent Exhibit 2012-0144

f) Subject to the exception stated in item g), ports that are members of the same Link Aggregation Group (i.e., two or more ports that have the same Actor System ID, Actor Key, Partner System ID, and Partner Key, and that are not required to be Individual) shall select the same Aggregator.

g) Any pair of ports that are members of the same Link Aggregation Group, but are connected together by the same link, shall not select the same Aggregator (i.e., if a loopback condition exists between two ports, they shall not be aggregated together. For both ports, the Actor System ID is the same as the Partner System ID; also, for port A, the Partner's port identifier is port B, and for port B, the Partner's port identifier is port A).

NOTE—This exception condition prevents the formation of an aggregated link, comprising two ends of the same physical link aggregated together, in which all frames transmitted through an Aggregator are immediately received through the same Aggregator. However, it permits the aggregation of multiple links that are in loopback; for example, if port A is looped back to port C and port B is looped back to port D, then it is permissible for A and B (or A and D) to aggregate together, and for C and D (or B and C) to aggregate together.

h) Any port that is required to be Individual (i.e., the operational state for the Actor or the Partner indicates that the port is Individual) shall not select the same Aggregator as any other port.

i) Any port that is Aggregatable shall not select an Aggregator to which an Individual port is already attached.

j) If the above conditions result in a given port being unable to select an Aggregator, then that port shall not be attached to any Aggregator.

k) If there are further constraints on the attachment of ports that have selected an Aggregator, those ports may be selected as standby in accordance with the rules specified in 43.6.1. Selection or deselection of that Aggregator can cause the Selection Logic to re-evaluate the ports to be selected as standby.

l) The Selection Logic operates upon the operational information recorded by the Receive state machine, along with knowledge of the Actor's own operational configuration and state. The Selection Logic uses the LAG ID for the port, determined from these operational parameters, to locate the correct Aggregator to attach the port to.

m) The Selection Logic is invoked whenever a port is not attached to and has not selected an Aggregator, and executes continuously until it has determined the correct Aggregator for the port.

NOTE—The Selection Logic may take a significant time to complete its determination of the correct Aggregator, as a suitable Aggregator may not be immediately available, due to configuration restrictions or the time taken to re-allocate ports to other Aggregators.

n) Once the correct Aggregator has been determined, the variable Selected shall be set to SELECTED or to STANDBY (43.4.8, 43.6.1).

NOTE—If Selected is SELECTED, the Mux machine will start the process of attaching the port to the selected Aggregator. If Selected is STANDBY, the Mux machine holds the port in the WAITING state, ready to be attached to its Aggregator once its Selected state changes to SELECTED.

o) The Selection Logic is responsible for computing the value of the Ready variable from the values of the Ready_N variable(s) associated with the set of ports that are waiting to attach to the same Aggregator (see 43.4.8).

p) Where the selection of a new Aggregator by a port, as a result of changes to the selection parameters, results in other ports in the System being required to re-select their Aggregators in turn, this is achieved by setting Selected to UNSELECTED for those other ports that are required to re-select their Aggregators.

NOTE—The value of Selected is set to UNSELECTED by the Receive machine for the port when a change of LAG ID is detected.

q) A port shall not be enabled for use by the MAC Client until it has both selected and attached to an Aggregator.

Copyright © 2000 IEEE. All rights reserved.

Authorized licensed use limited to: N.C. State University Libraries - Acquisitions & Discovery S. Downloaded on November 14,2023 at 14:15:01 UTC from IEEE Xplore. Restrictions apply.

Cisco v. Corrigent - IPR2023-00447
Patent Owner Corrigent Exhibit 2012-0145

43.4.14.2 Selection Logic—Recommended default operation

The recommended default behavior provides an element of determinism (i.e., history independence) in the assignment of ports to Aggregators. It also has the characteristic that no additional MAC addresses are needed, over and above those already assigned to the set of underlying MACs.

NOTE—This standard does not specify any alternative selection rules beyond the recommended set. A wide variety of selection rules are possible within the scope of the requirements stated in 43.4.14.1. In particular, it is possible within these requirements to support implementations that provide fewer Aggregators than ports, as well as implementations designed to minimize configuration changes at the expense of less deterministic behavior.

Each port has an Aggregator associated with it, (i.e., the number of Aggregators in the System equals the number of ports supported). Each port/Aggregator pair is assigned the same operational Key and port number. When there are multiple ports in an aggregation, the Aggregator that the set of ports selects is the Aggregator with the same port number as the lowest-numbered port in the aggregation. Note that this lowest numbered port may not be in a state that allows data transfer across the link; however, it has selected the Aggregator in question. This is illustrated in Figure 43-12.

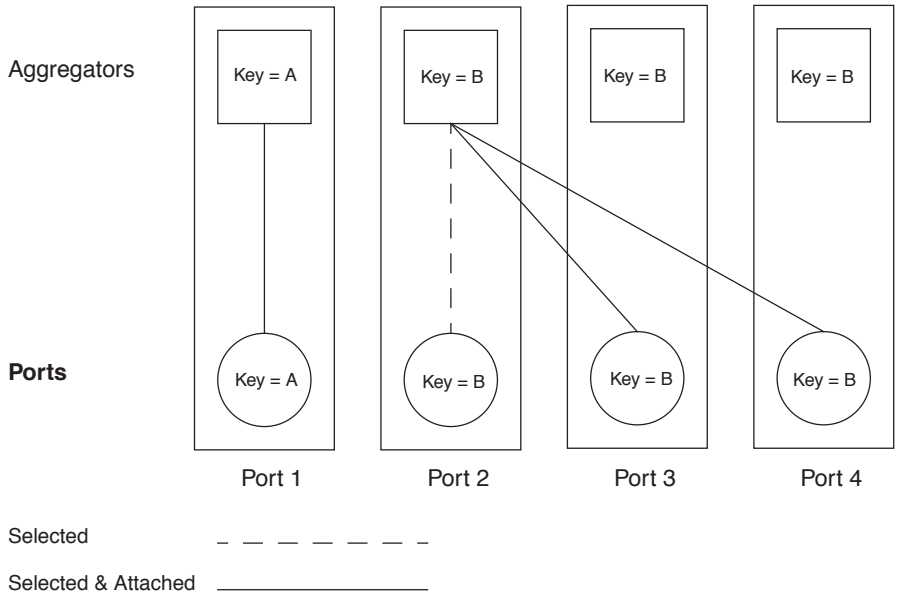

Figure 43-12—Selection of Aggregators

If the port is Individual, then the Aggregator selected is always the port's own Aggregator. Otherwise, an Aggregator is selected from the set of Aggregators corresponding to the set of ports that will form the aggregation. The Aggregator selected is the lowest numbered Aggregator with the same selection parameters as those of the port. These selection parameters are

a) The Actor's System ID
b) The Actor's operational Key
c) The Partner's System ID
d) The Partner's operational Key
e) The Individual_Aggregator state (which must be FALSE)

Copyright © 2000 IEEE. All rights reserved.
Authorized licensed use limited to: N.C. State University Libraries - Acquisitions & Discovery S. Downloaded on November 14,2023 at 14:15:01 UTC from IEEE Xplore. Restrictions apply.
Cisco v. Corrigent - IPR2023-00447
Patent Owner Corrigent Exhibit 2012-0146

43.4.15 Mux machine

The Mux machine shall implement the function specified in either of the Mux machine state diagrams, Figure 43-13 and Figure 43-14, with their associated parameters (43.4.4 through 43.4.11).

The state machine conventions in 21.5 assert that all in-state actions are instantaneous, are performed in sequence, and are performed prior to evaluating any exit conditions. While the Mux machine will operate correctly if all actions can be performed instantaneously, this will not be realistic in many implementations. Correct operation is maintained even if actions are not completed instantaneously, as long as each action completes prior to initiating the next sequential action, and all actions complete prior to evaluating any exit conditions.

The independent control state diagram (Figure 43-13) is suitable for use implementations in which it is possible to control enabling and disabling of frame collection from a port, and frame distribution to a port, independently. The coupled control state diagram (Figure 43-14) is suitable for use implementations where collecting and distributing cannot be controlled independently with respect to a port. It is recommended that the independent control state diagram be implemented in preference to the coupled control state diagram.

The value of the Selected variable may be changed by the following:

a) *The Receive machine*. The Receive machine can set Selected to UNSELECTED at any time if any of the following change: The Partner System ID, the Partner Priority, the Partner Key, the Partner_State.Aggregation, the Actor System ID, the Actor Priority, the Actor Key, or the Actor_State.Aggregation.
b) *The Selection Logic, in the process of selecting an Aggregator.* The Selection Logic will select an Aggregator when the Mux machine is in the DETACHED state and the value of the Selected variable is UNSELECTED.
c) *The Selection Logic, in the process of selecting or de-selecting standby links*. If the value of the Selected variable is SELECTED or STANDBY, the Selection Logic can change the value to STANDBY or SELECTED.

The Mux machine enters the WAITING state from the DETACHED state if the Selection Logic determines that Selected is either SELECTED or STANDBY. The WAITING state provides a holding state for the following two purposes:

d) If Selected is SELECTED, the wait_while_timer forces a delay to allow for the possibility that other ports may be reconfiguring at the same time. Once the wait_while_timer expires, and once the wait_while_timers of all other ports that are ready to attach to the same Aggregator have expired, the process of attaching the port to the Aggregator can proceed, and the state machine enters the ATTACHED state. During the waiting time, changes in selection parameters can occur that will result in a re-evaluation of Selected. If Selected becomes UNSELECTED, then the state machine re-enters the DETACHED state. If Selected becomes STANDBY, the operation is as described in item e).

   NOTE—This waiting period reduces the disturbance that will be visible to higher layers; for example, on start-up events. However, the selection need not wait for the entire waiting period in cases where it is known that no other ports will attach; for example, where all other ports with the same operational Key are already attached to the Aggregator.
e) If Selected is STANDBY, the port is held in the WAITING state until such a time as the selection parameters change, resulting in a re-evaluation of the Selected variable. If Selected becomes UNSELECTED, the state machine re-enters the DETACHED state. If SELECTED becomes SELECTED, then the operation is as described in item d). The latter case allows a port to be brought into operation from STANDBY with minimum delay once Selected becomes SELECTED.

Copyright © 2000 IEEE. All rights reserved.

Authorized licensed use limited to: N.C. State University Libraries - Acquisitions & Discovery S. Downloaded on November 14,2023 at 14:15:01 UTC from IEEE Xplore. Restrictions apply.

Cisco v. Corrigent - IPR2023-00447
Patent Owner Corrigent Exhibit 2012-0147

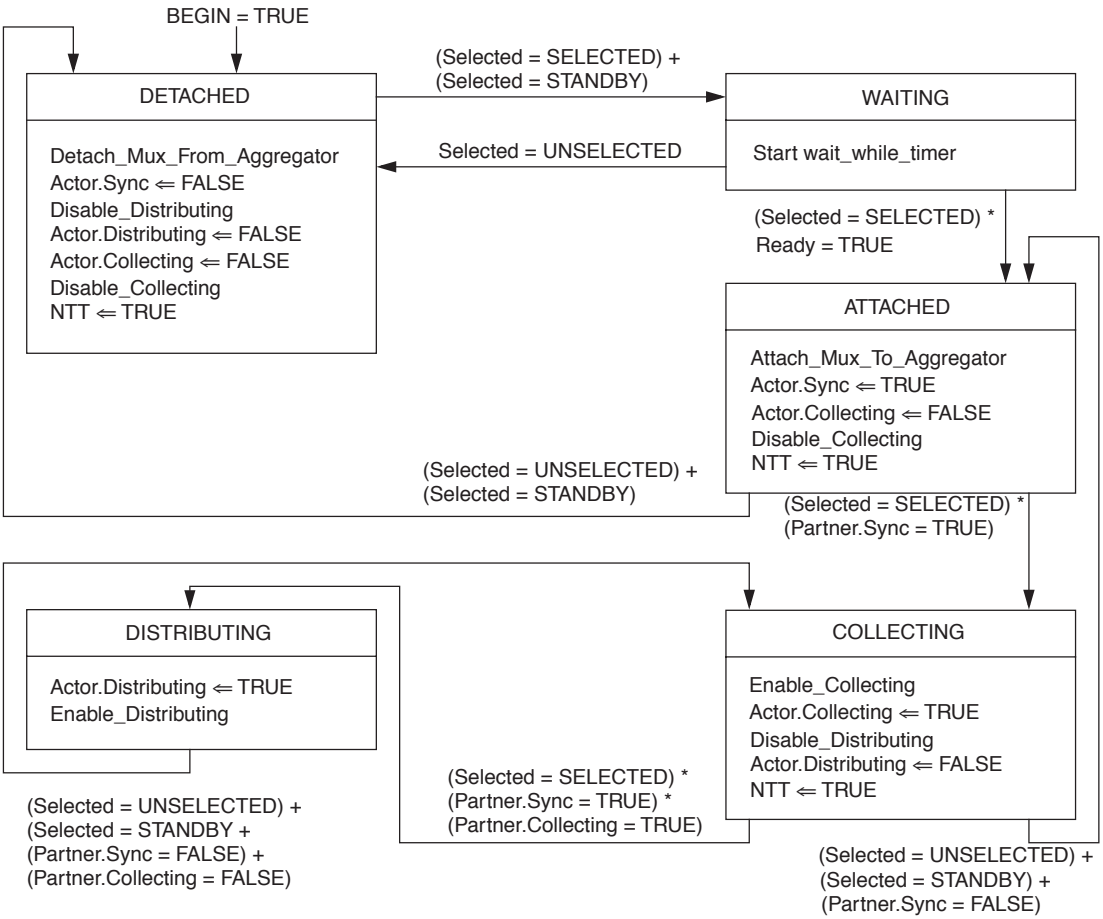

The following abbreviations are used in this diagram:
Actor.Sync: Actor_Oper_Port_State.Synchronization
Actor.Collecting: Actor_Oper_Port_State.Collecting
Actor.Distributing: Actor_Oper_Port_State.Distributing
Partner.Sync: Partner_Oper_Port_State.Synchronization
Partner.Collecting: Partner_Oper_Port_State.Collecting

Figure 43-13—Mux machine state diagram (independent control)

On entry to the ATTACHED state, the Mux machine initiates the process of attaching the port to the selected Aggregator. Once the attachment process has completed, the value of Actor_Oper_Port_State.Synchronization is set to TRUE indicating that the Actor considers the port to be IN_SYNC, and Actor_Oper_Port_State.Collecting is set to FALSE. Collection of frames from the port is disabled. In the coupled control state machine, Distribution of frames to the port is also disabled, and Actor_Oper_Port_State.Distributing is set to FALSE.

A change in the Selected variable to UNSELECTED or to STANDBY causes the state machine to enter the DETACHED state. The process of detaching the port from the Aggregator is started. Once the detachment process is completed, Actor_Oper_Port_State.Synchronization is set to FALSE indicating that the Actor considers the port to be OUT_OF_SYNC, distribution of frames to the port is disabled, Actor_Oper_Port_State.Distributing and Actor_Oper_Port_State.Collecting are set to FALSE, and collection of frames from the port is disabled. The state machine remains in the DISABLED state until such time as the Selection logic is able to select an appropriate Aggregator.

Copyright © 2000 IEEE. All rights reserved.
Authorized licensed use limited to: N.C. State University Libraries - Acquisitions & Discovery S. Downloaded on November 14,2023 at 14:15:01 UTC from IEEE Xplore. Restrictions apply.
Cisco v. Corrigent - IPR2023-00447
Patent Owner Corrigent Exhibit 2012-0148

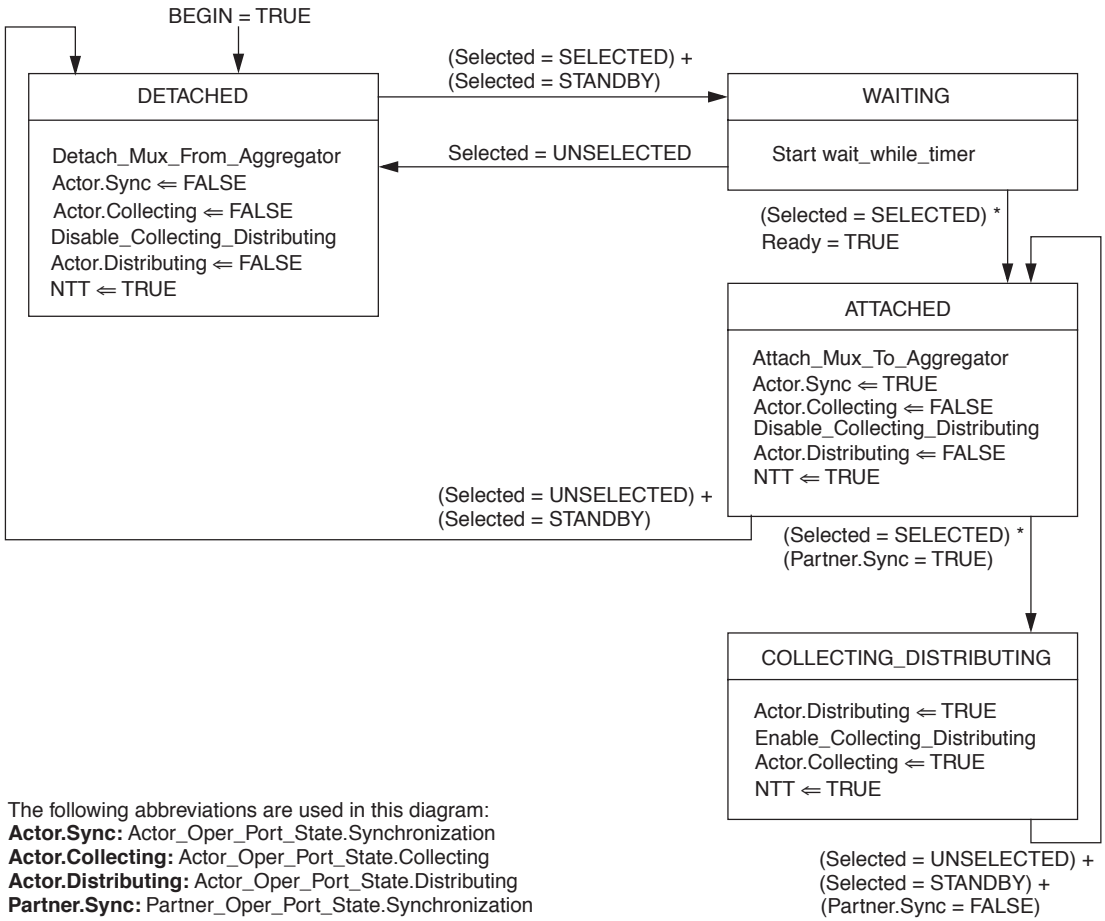

Figure 43-14—Mux machine state diagram (coupled control)

While in the ATTACHED state, a TRUE value for Partner_Oper_Port_State.Synchronization causes the state machine to transition to the COLLECTING state (independent control) or the COLLECTING_DISTRIBUTING state (coupled control).

In the COLLECTING state, collection of frames from the port is enabled, then Actor_Oper_Port_State.Collecting is set to TRUE, then distribution of frames to the port is disabled and Actor_Port_Oper_State.Distributing is set to FALSE. The state machine will return to the ATTACHED state if Selected changes to UNSELECTED or STANDBY, or if the Partner's synchronization state becomes FALSE. Once the Partner has signalled that collecting has been enabled (Partner_Oper_Port_State.Collecting is TRUE), the state machine transitions to the DISTRIBUTING state. The value of Actor_Oper_Port_State.Distributing is set to TRUE, and then distribution of frames to the port is enabled. From DISTRIBUTING, a return to the COLLECTING state occurs if the value of Selected becomes UNSELECTED or STANDBY, if the Partner's synchronization state becomes FALSE, or if the Partner signals that collection has been disabled (Partner_Oper_Port_State.Collecting is FALSE).

In the COLLECTING_DISTRIBUTING state, the value of Actor_Oper_Port_State.Distributing is set to TRUE, distribution of frames to the port and collection of frames from the port are both enabled, and then Actor_Oper_Port_State.Collecting is set to TRUE. The state machine will return to the ATTACHED state if Selected changes to UNSELECTED or STANDBY, or if the Partner's synchronization state becomes FALSE.

Copyright © 2000 IEEE. All rights reserved.

Authorized licensed use limited to: N.C. State University Libraries - Acquisitions & Discovery S. Downloaded on November 14,2023 at 14:15:01 UTC from IEEE Xplore. Restrictions apply.
Cisco v. Corrigent - IPR2023-00447
Patent Owner Corrigent Exhibit 2012-0149

The sequence of operations and transitions defined for the COLLECTING and DISTRIBUTING states in the independent control version of this state machine ensures that frames are not distributed to a port until the Partner has enabled collection, and that distribution is stopped as soon as the Partner's state indicates that collection has been disabled. This sequence minimizes the possibility that frames will be misdelivered during the process of bringing the port into operation or taking the port out of operation. In the coupled control version of the state machine, the COLLECTING and DISTRIBUTING states merge together to form the combined state, COLLECTING_DISTRIBUTING. As independent control is not possible, the coupled control state machine does not wait for the Partner to signal that collection has started before enabling both collection and distribution.

The NTT variable is set to TRUE in the DETACHED, ATTACHED, COLLECTING, and COLLECTING_DISTRIBUTING states in order to ensure that the Partner is made aware of the changes in the Actor's state variables that are caused by the operations performed in those states.

43.4.16 Transmit machine

When the Transmit machine creates a LACPDU for transmission, it shall fill in the following fields with the corresponding operational values for this port:

a) Actor_Port and Actor_Port_Priority
b) Actor_System and Actor_System_Priority
c) Actor_Key
d) Actor_State
e) Partner_Port and Partner_Port_Priority
f) Partner_System and Partner_System_Priority
g) Partner_Key
h) Partner_State
i) CollectorMaxDelay

When the Periodic machine is in the NO_PERIODIC state, the Transmit machine shall

— Not transmit any LACPDUs, and
— Set the value of NTT to FALSE.

When the LACP_Enabled variable is TRUE and the NTT (43.4.7) variable is TRUE, the Transmit machine shall ensure that a properly formatted LACPDU (43.4.2) is transmitted (i.e., issue a CtrlMuxN:MA_DATA.Request(LACPDU) service primitive), subject to the restriction that no more than three LACPDUs may be transmitted in any Fast_Periodic_Time interval. If NTT is set to TRUE when this limit is in force, the transmission shall be delayed until such a time as the restriction is no longer in force. The NTT variable shall be set to FALSE when the Transmit machine has transmitted a LACPDU.

If the transmission of a LACPDU is delayed due to the above restriction, the information sent in the LACPDU corresponds to the operational values for the port at the time of transmission, not at the time when NTT was first set to TRUE. In other words, the LACPDU transmission model is based upon the transmission of state information that is current at the time an opportunity to transmit occurs, as opposed to queuing messages for transmission.

When the LACP_Enabled variable is FALSE, the Transmit machine shall not transmit any LACPDUs and shall set the value of NTT to FALSE.

Copyright © 2000 IEEE. All rights reserved.
Authorized licensed use limited to: N.C. State University Libraries - Acquisitions & Discovery S. Downloaded on November 14,2023 at 14:15:01 UTC from IEEE Xplore. Restrictions apply.
Cisco v. Corrigent - IPR2023-00447
Patent Owner Corrigent Exhibit 2012-0150

43.4.17 Churn Detection machines

If implemented, the Churn Detection machines shall implement the functions specified in Figure 43-15 and Figure 43-16 with their associated parameters (43.4.4 through 43.4.11). Implementation of the Churn Detection machines is mandatory if the associated management functionality (the Aggregation Port Debug Information package) is implemented; otherwise, implementation of the Churn Detection machines is optional.

The Churn Detection machines detect the situation where a port is operable, but the Actor and Partner have not attached the link to an Aggregator and brought the link into operation within a bounded time period. Under normal operation of the LACP, agreement between Actor and Partner should be reached very rapidly. Continued failure to reach agreement can be symptomatic of device failure, of the presence of non-standard devices, or of misconfiguration; it can also be the result of normal operation in cases where either or both Systems are restricted in their ability to aggregate. Detection of this condition is signalled by the Churn Detection machines to management in order to prompt administrative action to further diagnose and correct the fault.

NOTE—One of the classes of problems that will be detected by this machine is the one where the implementation has been designed to support a limited number of Aggregators (fewer than the number of ports—see 43.6.4.2) and the physical topology is such that one or more ports end up with no Aggregator to attach to. This may be the result of a wiring error or an error in the allocation of operational Key values to the ports and Aggregators. Alternatively, failure of a link to aggregate may be the result of a link being placed in standby mode by a System that has hardware limitations placed on its aggregation ability, leading it to make use of the techniques described in 43.6 to find the ideal configuration. Given that the time taken by an aggregation-constrained System to stabilize its configuration may be relatively large, the churn detection timers allow 60 seconds to elapse before a Churn condition is signalled.

The symptoms that the Actor Churn Detection state machine detects is that the Actor's Mux has determined that it is OUT_OF_SYNC, and that condition has not resolved itself within a period of time equal to Short_Timeout_Time (43.4.4). Under normal conditions, this is ample time for convergence to take place. Similarly, the Partner Churn Detection state machine detects a failure of the Partner's Mux to synchronize.

The Actor Churn Detection state machine is depicted in Figure 43-15. The Partner Churn Detection state machine is depicted in Figure 43-16.

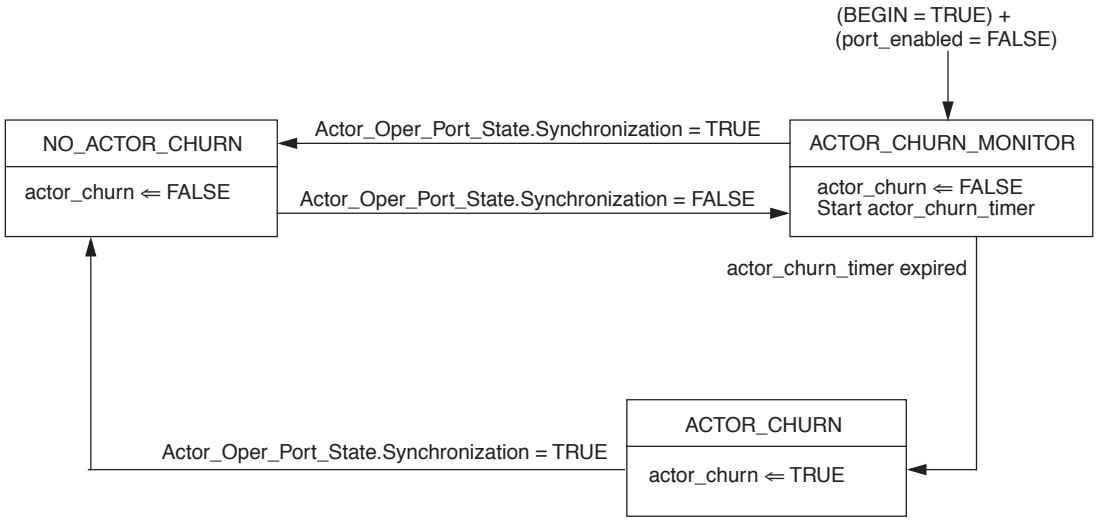

Figure 43-15—Actor Churn Detection machine state diagram

Copyright © 2000 IEEE. All rights reserved.

Authorized licensed use limited to: N.C. State University Libraries - Acquisitions & Discovery S. Downloaded on November 14,2023 at 14:15:01 UTC from IEEE Xplore. Restrictions apply.
Cisco v. Corrigent - IPR2023-00447
Patent Owner Corrigent Exhibit 2012-0151

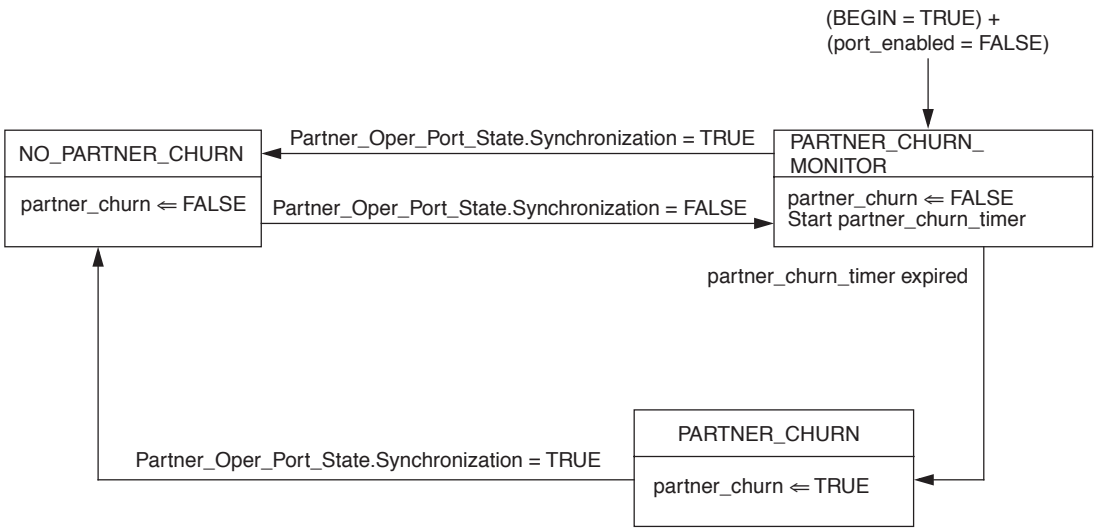

Figure 43-16—Partner Churn Detection machine state diagram

43.5 Marker protocol

43.5.1 Introduction

The Marker protocol allows the distribution function of an Actor's Link Aggregation sublayer to request the transmission of a Marker PDU on a given link. The Marker PDU is received by the Partner's collection function and a Marker Response PDU is returned on the same link to the initiating Actor's distribution function. Marker and Marker Response PDUs are treated by the underlying MACs at each end of the link as normal MAC Client PDUs; i.e., there is no prioritization or special treatment of Marker or Marker Response PDUs relative to other frames. Marker/Marker Response PDUs are subject to the operation of flow control, where supported on the link. Hence, if the distribution function requests transmission of a Marker PDU on a given link and does not transmit any further MAC Client PDUs that relate to a given set of conversations until the corresponding Marker Response PDU is received from that link, then it can be certain that there are no MAC Client PDUs related to those conversations still to be received by the Partner's collection function. The use of the Marker protocol can therefore allow the Distribution function a means of determining the point at which a given set of conversations can safely be reallocated from one link to another without the danger of causing frames in those conversations to be mis-ordered at the collector.

NOTE—The use of the Marker protocol is further discussed in Annex 43A.

The operation of the Marker protocol is unaffected by any changes in the Collecting and Distributing states associated with the port. Therefore, Marker and Marker Response PDUs can be sent on a port whose distribution function is disabled; similarly, such PDUs can be received and passed to the relevant Aggregator's collection or distribution function on a port whose collection function is disabled.

The use of the Marker protocol is optional; however, the ability to respond to Marker PDUs, as defined for the operation of the Marker Responder (see 43.5.4.1 and 43.5.4.2), is mandatory. Some distribution algorithms may not require the use of a marker; other mechanisms (such as timeouts) may be used as an alternative. As the specification of distribution algorithms is outside the scope of this standard, no attempt is made to specify how, when, or if the Marker protocol is used. (See Annex 43A for an informative discussion of distribution algorithms.).

Copyright © 2000 IEEE. All rights reserved.
Authorized licensed use limited to: N.C. State University Libraries - Acquisitions & Discovery S. Downloaded on November 14,2023 at 14:15:01 UTC from IEEE Xplore. Restrictions apply.
Cisco v. Corrigent - IPR2023-00447
Patent Owner Corrigent Exhibit 2012-0152

The Marker protocol does not provide a guarantee of a response from the Partner; no provision is made for the consequences of frame loss or for the failure of the Partner System to respond correctly. Implementations that make use of this protocol must therefore make their own provision for handling such cases.

43.5.2 Sequence of operations

Figure 43-17 illustrates the sequence of marker operations between an initiating and responding System. Time is assumed to flow from the top of the diagram to the bottom.

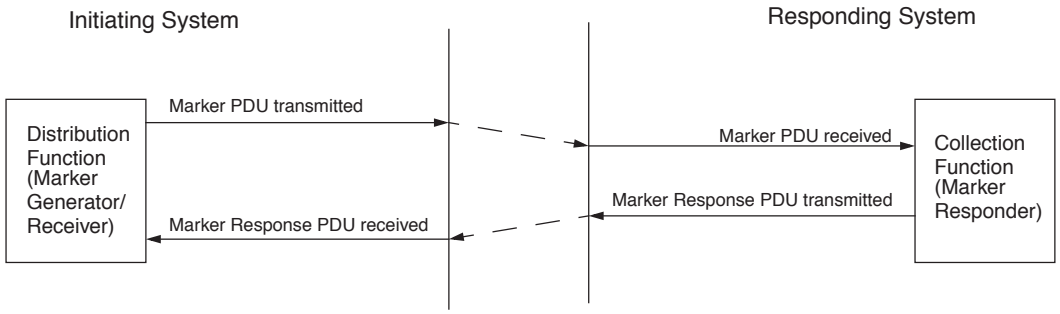

Figure 43-17—Marker protocol time sequence diagram

43.5.3 Marker and Marker Response PDU structure and encoding

43.5.3.1 Transmission and representation of octets

All Marker and Marker Response PDUs comprise an integral number of octets. The bits in each octet are numbered from 0 to 7, where 0 is the low-order bit. When consecutive octets are used to represent a numerical value, the most significant octet is transmitted first, followed by successively less significant octets.

When the encoding of (an element of) a Marker or Marker Response PDU is depicted in a diagram, then

a) Octets are transmitted from top to bottom.
b) Within an octet, bits are shown with bit 0 to the left and bit 7 to the right, and are transmitted from left to right.
c) Numerical values are encoded as binary numbers.

43.5.3.2 Marker and Marker Response PDU structure

Marker PDUs and Marker Response PDUs are basic IEEE 802.3 frames; they shall not be tagged (see Clause 3). The Marker PDU and Marker Response PDU structure shall be as shown in Figure 43-18 and as further described in the following field definitions:

a) *Destination Address*. The DA in all Marker and Marker Response PDUs is the Slow_Protocols_Multicast address. Its use and encoding are specified in Annex 43B.
b) *Source Address*. The SA in Marker and Marker Response PDUs is the individual MAC address associated with the port from which the PDU is transmitted.
c) *Length/Type*. Marker and Marker Response PDUs are always Type encoded, and carry the Slow Protocol type field. The use and encoding of this type field is specified in Annex 43B.
d) *Subtype*. The Subtype field identifies the specific Slow Protocol being encapsulated. Both Marker and Marker Response PDUs carry the Marker_subtype value 0x02.

Copyright © 2000 IEEE. All rights reserved.

Authorized licensed use limited to: N.C. State University Libraries - Acquisitions & Discovery S. Downloaded on November 14,2023 at 14:15:01 UTC from IEEE Xplore. Restrictions apply.
Cisco v. Corrigent - IPR2023-00447
Patent Owner Corrigent Exhibit 2012-0153

e) *Version number*. This identifies the Marker protocol version; implementations conformant to this version of the standard carry the value 0x01.

f) *TLV_type = Marker Information/Marker Response Information*. This indicates the nature of the information carried in this TLV-tuple. Marker Information is encoded as the integer value 0x01; Marker Response Information is encoded as the integer value 0x02.

g) *Marker_Information_Length/Marker_Response_Information_Length*. This field indicates the length (in octets) of this TLV-tuple. Both Marker and Marker Response information use a length value of 16 (0x10).

h) *Requester_Port*. The port number assigned to the port by the Requester (the System sending the initial Marker PDU), encoded as an unsigned integer.

Marker PDU	Octets	Marker Response PDU
Destination Address	6	Destination Address
Source Address	6	Source Address
Length/Type	2	Length/Type
Subtype = Marker	1	Subtype = Marker
Version Number	1	Version Number
TLV_type = Marker Information	1	TLV_type = Marker Response Information
Marker_Information_Length= 16	1	Marker_Response_Information_Length = 16
Requester_Port	2	Requester_Port
Requester_System	6	Requester_System
Requester_Transaction_ID	4	Requester_Transaction_ID
Pad = 0	2	Pad = 0
TLV_type = Terminator	1	TLV_type = Terminator
Terminator_Length = 0	1	Terminator_Length = 0
Reserved	90	Reserved
FCS	4	FCS

Figure 43-18—Marker PDU and Marker Response PDU structure

i) *Requester_System*. The Requester's System ID, encoded as a MAC address.

j) *Requester_Transaction_ID*. The transaction ID allocated to this request by the requester, encoded as an integer.

k) *Pad*. This field is used to align TLV-tuples on 16-byte memory boundaries. It is transmitted as zeroes in Marker PDUs; in Marker Response PDUs, this field may be transmitted as zeroes, or with the contents of this field from the Marker PDU triggering the response. The field is ignored on receipt in all cases.

NOTE—The difference in handling of the Pad field in Marker Response PDUs allows an implementation to reflect the contents of the received Marker PDU in its response, without enforcing the requirement to transmit the field as zeroes.

l) *TLV_type = Terminator*. This field indicates the nature of the information carried in this TLV-tuple. Terminator (end of message) information carries the integer value 0x00.

m) *Terminator_Length*. This field indicates the length (in octets) of this TLV-tuple. Terminator information uses a length value of 0 (0x00).

Copyright © 2000 IEEE. All rights reserved.
Authorized licensed use limited to: N.C. State University Libraries - Acquisitions & Discovery S. Downloaded on November 14,2023 at 14:15:01 UTC from IEEE Xplore. Restrictions apply.
Cisco v. Corrigent - IPR2023-00447
Patent Owner Corrigent Exhibit 2012-0154

n) *Reserved*. These 90 octets are reserved for use in future extensions to the protocol. It is transmitted as zeroes in Marker PDUs; in Marker Response PDUs, this field may be either transmitted as zeroes, or with the contents of this field from the Marker PDU triggering the response. The field is ignored on receipt in all cases.

NOTE—These trailing reserved octets are included in all Marker and Marker Response PDUs in order to force a fixed PDU size, regardless of the version of the protocol. Hence, a Version 1 implementation is guaranteed to be able to receive version N PDUs successfully, although version N PDUs may contain additional information that cannot be interpreted (and will be ignored) by the Version 1 implementation. A crucial factor in ensuring backwards compatibility is that any future version of the protocol is required not to re-define the structure or semantics of information defined for the previous version; it may only add new information elements to the previous set. Hence, in a version N PDU, a Version 1 implementation can expect to find the Version 1 information in exactly the same places as in a Version 1 PDU, and can expect to interpret that information as defined for Version 1.

o) *FCS*. This field is the Frame Check Sequence, typically generated by the underlying MAC.

43.5.4 Protocol definition

43.5.4.1 Operation of the marker protocol

Marker PDUs may be generated by the Frame Distribution function to provide a sequence marker in the stream of frames constituting a conversation or set of conversations. Received Marker PDUs are delivered to the Marker Responder within the Frame Collection function of the Partner System.

On receipt of a valid Marker PDU, the Frame Collection function issues a Marker Response PDU, in the format specified in Figure 43-18, to the same port from which the Marker PDU was received. The **Requester_Port, Requester_System,** and **Requester_Transaction_ID** parameter in the Marker Response PDU carry the same values as those received in the corresponding Marker PDU.

Received Marker Response PDUs are passed to the Marker Receiver within the Frame Distribution function. Implementation of the Marker Generator and Receiver is optional.

The Marker Generator, if implemented, shall comply with the frame rate limitation constraint for Slow Protocols, as specified in Annex 43B.2. A Marker Responder may (but is not required to) control its Marker Response transmissions to conform to this Slow Protocols timing constraint when faced with Marker messages not in compliance with this constraint (i.e., to send fewer Marker Response PDUs than Marker PDUs received). If the Marker Responder is controlling its responses in this manner, Marker Response PDUs corresponding to Marker PDUs received in excess of the Slow Protocols timing constraint shall not be sent.

NOTE—It is important that Marker Response PDUs not be queued indefinitely, and sent long after the corresponding Marker PDU that triggered the response.

Frames generated by the Marker Responder do not count towards the rate limitation constraint for Slow Protocols, as specified in Annex 43B.2.

43.5.4.2 Marker Responder state diagram

The Marker Responder shall implement the function specified in Figure 43-19, with its associated parameters (43.5.4.2.1 through 43.5.4.2.3).

43.5.4.2.1 Constants

Slow_Protocols_Multicast
The value of the Slow Protocols reserved multicast address. (See Table 43B–1.)

Copyright © 2000 IEEE. All rights reserved.

Authorized licensed use limited to: N.C. State University Libraries - Acquisitions & Discovery S. Downloaded on November 14,2023 at 14:15:01 UTC from IEEE Xplore. Restrictions apply.

Cisco v. Corrigent - IPR2023-00447
Patent Owner Corrigent Exhibit 2012-0155

43.5.4.2.2 Variables

DA
SA
m_sdu
service_class
status
The parameters of the MA_DATA.request and MA_DATA.indication primitives, as defined in Clause 2.

43.5.4.2.3 Messages

AggMuxN:MA_DATA.request
The service primitive used to transmit a frame with the specified parameters.

AggMuxN:MA_DATA.indication
The service primitive used to pass a received frame to a client with the specified parameters.

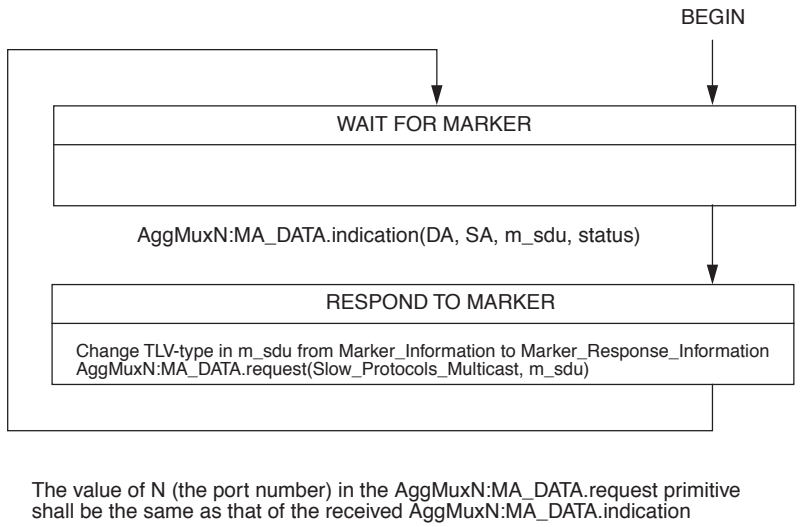

Figure 43-19—Marker Responder state diagram

Upon receipt of an AggMuxN:MA_DATA.indication primitive, the Marker Responder shall not validate the Version Number, Pad, or Reserved fields in the contained Marker Request PDU. The same actions are taken regardless of the values received in these fields. A Marker Responder may validate the Marker_Information_Length field. These behaviors, together with the constraint on future protocol enhancements discussed in the Note in 43.5.3.2, allow Version 1 devices to be compatible with future revisions of the protocol.

43.6 Configuration capabilities and restrictions

43.6.1 Use of system and port priorities

The formulation chosen for the Link Aggregation Group identifier (43.3.6) has the consequence that it is not possible to represent two or more Link Aggregation Groups, comprising aggregatable links, that share the same combination of {SK, TL}. Hence, placing configuration restrictions on the size of an aggregation (e.g.,

Copyright © 2000 IEEE. All rights reserved.
Authorized licensed use limited to: N.C. State University Libraries - Acquisitions & Discovery S. Downloaded on November 14,2023 at 14:15:01 UTC from IEEE Xplore. Restrictions apply.
Cisco v. Corrigent - IPR2023-00447
Patent Owner Corrigent Exhibit 2012-0156

for a Key Group containing 6 members, restricting the size of any aggregation to 4 members or fewer) is only possible if it is also acceptable that only one Link Aggregation Group can be constructed from that Key Group for a given {SK, TL}. In practice, this restriction can be somewhat alleviated by subdividing Key Groups and allocating different operational Keys to each subdivision; however, this is, in general, only useful if the form of the size restriction is closely bound to physical subdivisions in the implementation (e.g., it might be possible to aggregate only those links that are on the same interface card).

In Systems that have limited aggregation capability of this form, the following algorithm shall be used to determine the subset of ports that will be aggregated together:

a) The System Aggregation Priority of each System is an eight octet binary number, formed by using the Actor_System_Priority as the two most significant octets and the Actor's System ID as the least significant six octets. For a given Actor and Partner, the System with the numerically lower value of System Aggregation Priority has the higher priority.
b) The Port Aggregation Priority of each port is a four octet binary number, formed by using the Actor_Port_Priority as the two most significant octets and the port number as the two least significant octets. For any given set of ports, the port with the numerically lower value of Port Aggregation Priority has the higher priority.
c) Ports shall be selected for aggregation by each System based upon the Port Aggregation Priority assigned by the System with the higher System Aggregation Priority, starting with the highest priority port of the System with the higher priority, and working downward through the ordered list of Port Aggregation Priority values for the N ports, applying the particular constraints imposed on the System concerned.
d) For each link that a given System cannot include in the aggregation, the Selection Logic identifies the Selection state of the corresponding port as STANDBY, preventing the link from becoming active. The synchronization state signalled in transmitted LACPDUs for such links will be OUT_OF_SYNC.
e) The selection algorithm is reapplied upon changes in the membership of the Link Aggregation Group (for example, if a link fails, or if a new link joins the group) and any consequent changes to the set of active links are made accordingly.

A port that is selected as standby as a result of limitations on aggregation capability can be viewed as providing a "hot standby" facility, as it will be able to take part in the aggregation upon failure of one of the active links in the aggregation. The ability to hold links in a standby mode in this way provides the possibility of using LACP even where the System is incapable of supporting distribution and collection with more than one port. Parallel links could be automatically configured as standby links, and deployed to mask link failures without any disruption to higher layer protocols.

43.6.2 Dynamic allocation of operational Keys

In some circumstances, the use of System and port priorities may prove to be insufficient to generate the optimum aggregation among the set of links connecting a pair of Systems. A System may have a limited aggregation capability that cannot be simply expressed as a limit on the total number of links in the aggregation. The full description of its restrictions may be that it can only aggregate together particular subsets of links, and the sizes of the subsets need not all be the same.

NOTE—An example would be an implementation organized such that, for a set of four links A through D, it would be possible to operate with {A+B+C+D} as a single aggregation, or operate with {A+B} and {C+D} as two separate aggregations, or operate as four individual links; however, all other aggregation possibilities (such as {A+C} and {B+D}) would not be achievable by the implementation.

In such circumstances, it is permissible for the System with the higher System Aggregation Priority (i.e., the numerically lower value) to dynamically modify the operational Key value associated with one or more of

Copyright © 2000 IEEE. All rights reserved.

Authorized licensed use limited to: N.C. State University Libraries - Acquisitions & Discovery S. Downloaded on November 14,2023 at 14:15:01 UTC from IEEE Xplore. Restrictions apply.
Cisco v. Corrigent - IPR2023-00447
Patent Owner Corrigent Exhibit 2012-0157

the ports; the System with the lower priority shall not attempt to modify operational Key values for this purpose. Operational Key changes made by the higher priority System should be consistent with maintaining its highest priority port in the aggregate as an active link (i.e., in the IN_SYNC state). Successive operational Key changes, if they occur, should progressively reduce the number of ports in the aggregation. The original operational Key value should be maintained for the highest priority port thought to be aggregatable.

NOTE—Restricting operational Key changes in the manner described prevents the case where both Partner Systems involved have limited capability and both attempt to make operational Key changes; this could be a non-converging process, as a change by one participant can cause the other participant to make a change, which in turn causes the first participant to make a change—and so on, ad infinitum.

This approach effectively gives the higher priority System permission to search the set of possible configurations, in order to find the best combination of links given its own and its Partner's configuration constraints. The reaction of the Partner System to these changes can be determined by observing the changes in the synchronization state of each link. A System performing operational Key changes should allow at least 4 seconds for the Partner System to change an OUT_OF_SYNC state to an IN_SYNC state.

In the course of normal operation a port can dynamically change its operating characteristics (e.g., data rate, full or half duplex operation). It is permissible (and appropriate) for the operational Key value associated with such a port to change with the corresponding changes in the operating characteristics of the link, so that the operational Key value always correctly reflects the aggregation capability of the link. Operational Key changes that reflect such dynamic changes in the operating characteristics of a link may be made by either System without restriction.

43.6.3 Link Aggregation on shared-medium links

The Link Aggregation Control Protocol cannot detect the presence of multiple Aggregation-aware devices on the same link. Hence, shared-medium links shall be treated as Individual, with transmission/reception of LACPDUs disabled on such ports.

43.6.4 Selection Logic variants

Two variants of the Selection Logic rules are described as follows:

a) The first accommodates implementations that may wish to operate in a manner that minimizes disturbance of existing aggregates, at the expense of the deterministic characteristics of the logic described in 43.4.14.2.
b) The second accommodates implementations that may wish to limit the number of Aggregators that are available for use to fewer than the number of ports supported.

43.6.4.1 Reduced reconfiguration

By removing the constraint that the Aggregator chosen is always the lowest numbered Aggregator associated with the set of ports in an aggregation, an implementation can minimize the degree to which changes in the membership of a given aggregation result in changes of connectivity at higher layers. As there would still be the same number of Aggregators and ports with a given operational Key value, any port will still always be able to find an appropriate Aggregator to attach to, however the configuration achieved over time (i.e., after a series of link disconnections, reconnections, or reconfigurations) with this relaxed set of rules would not necessarily be the same as the configuration achieved if all Systems involved were reset, given the rules stated in 43.4.15.

Copyright © 2000 IEEE. All rights reserved.
Authorized licensed use limited to: N.C. State University Libraries - Acquisitions & Discovery S. Downloaded on November 14,2023 at 14:15:01 UTC from IEEE Xplore. Restrictions apply.
Cisco v. Corrigent - IPR2023-00447
Patent Owner Corrigent Exhibit 2012-0158

43.6.4.2 Limited Aggregator availability

By removing the constraint that there are always as many Aggregators as ports, an implementation can limit the number of MAC Client interfaces available to higher layers while maintaining the ability for each Aggregator to serve multiple ports. This has the same effect as removing the assumption that Aggregators and their associated ports have the same operational Key value; Aggregators can be effectively disabled (and therefore ignored) by configuring their Keys to be different from any operational Key value allocated to any of the ports.

In this scenario, any port(s) that cannot find a suitable Aggregator to attach to will simply wait in the DETACHED state until an Aggregator becomes available, with a synchronization state of OUT_OF_SYNC.

43.7 Protocol Implementation Conformance Statement (PICS) proforma for Clause 43, Aggregation of Multiple Link Segments[5]

43.7.1 Introduction

The supplier of an implementation that is claimed to conform to Clause 43, Link Aggregation, shall complete the following Protocol Implementation Conformance Statement (PICS) proforma.

A detailed description of the symbols used in the PICS proforma, along with instructions for completing the PICS proforma, can be found in Clause 21.

43.7.2 Identification

43.7.2.1 Implementation identification

Supplier (Note 1)	
Contact point for queries about the PICS (Note 1)	
Implementation Name(s) and Version(s) (Notes 1 and 3)	
Other information necessary for full identification—e.g., name(s) and version(s) of machines and/or operating system names (Note 2)	
NOTES 1—Required for all implementations. 2—May be completed as appropriate in meeting the requirements for the identification. 3—The terms Name and Version should be interpreted appropriately to correspond with a supplier's terminology (e.g., Type, Series, Model).	

[5]*Copyright release for PICS proformas:* Users of this standard may freely reproduce the PICS proforma in this annex so that it can be used for its intended purpose and may further publish the completed PICS.

Copyright © 2000 IEEE. All rights reserved.

Authorized licensed use limited to: N.C. State University Libraries - Acquisitions & Discovery S. Downloaded on November 14,2023 at 14:15:01 UTC from IEEE Xplore. Restrictions apply.

Cisco v. Corrigent - IPR2023-00447
Patent Owner Corrigent Exhibit 2012-0159

43.7.2.2 Protocol summary

Identification of protocol specification	IEEE Std 802.3ad-2000, Clause 43, Link Aggregation.
Identification of amendments and corrigenda to the PICS proforma which have been completed as part of the PICS	
Have any Exception items been required? No [ ] Yes [ ] (See Clause 21: the answer Yes means that the implementation does not conform to IEEE Std 802.3ad-2000, Clause 43, Link Aggregation.)	

Date of Statement	

43.7.3 Major capabilities/options

Item	Feature	Subclause	Value/Comment	Status	Support
*MG	Marker Generator/Receiver	43.2.5		O	Yes [ ] No [ ]
*AM	Aggregation Port Debug Information package support	30.7		O	Yes [ ] No [ ]
*CM	Churn Detection machine	43.4.17	Required if Aggregation Port Debug Information package supported	AM: M !AM: O	N/A [ ] M:Yes [ ] Yes [ ] No [ ]

43.7.4 Frame Collector

Item	Feature	Subclause	Value/Comment	Status	Support
FC1	Frame Collector function	43.2.3	As specified in the state diagram shown in Figure 43-3 and associated definitions in 43.2.3.1	M	Yes [ ]
FC2	Frame Collector function—CollectorMaxDelay	43.2.3.1.4	Deliver or discard frames within CollectorMaxDelay	M	Yes [ ]

Copyright © 2000 IEEE. All rights reserved.
Authorized licensed use limited to: N.C. State University Libraries - Acquisitions & Discovery S. Downloaded on November 14,2023 at 14:15:01 UTC from IEEE Xplore. Restrictions apply.
Cisco v. Corrigent - IPR2023-00447
Patent Owner Corrigent Exhibit 2012-0160

43.7.5 Frame Distributor

Item	Feature	Subclause	Value/Comment	Status	Support
	Distribution algorithm ensures the following, when frames received by Frame Collector:	43.2.4			
FD1	Frame mis-ordering		None	M	Yes [ ]
FD2	Frame duplication		None	M	Yes [ ]
FD3	Frame Distributor function	43.2.4	Function as specified in the state diagram shown in Figure 43-4 and associated definitions in 43.2.4.1	M	Yes [ ]

43.7.6 Marker protocol

Item	Feature	Subclause	Value/Comment	Status	Support
MGR1	Marker Generator/Receiver	43.2.5		MG:M	N/A [ ] M:Yes [ ]
MGR2	Marker Responder	43.2.6	Function specified in 43.5.4.2	M	Yes [ ]

43.7.7 Aggregator Parser/Multiplexer

Item	Feature	Subclause	Value/Comment	Status	Support
APM1	Aggregator Multiplexer	43.2.7	Transparent pass-through of frames	M	Yes [ ]
APM2	Aggregator Multiplexer	43.2.7	Discard of TX frames when port not Distributing	M	Yes [ ]
APM3	Aggregator Parser	43.2.7	Function specified by state diagram shown in Figure 43-5 and associated definitions in 43.2.7.1.	M	Yes [ ]
APM4	Aggregator Parser	43.2.7	Discard of RX frames when port not Collecting	M	Yes [ ]

Copyright © 2000 IEEE. All rights reserved.

Authorized licensed use limited to: N.C. State University Libraries - Acquisitions & Discovery S. Downloaded on November 14,2023 at 14:15:01 UTC from IEEE Xplore. Restrictions apply.
Cisco v. Corrigent - IPR2023-00447
Patent Owner Corrigent Exhibit 2012-0161

43.7.8 Control Parser/Multiplexer

Item	Feature	Subclause	Value/Comment	Status	Support
CPM1	Control Multiplexer	43.2.9	Transparent pass-through of frames	M	Yes [ ]
CPM2	Control Parser	43.2.9	Function specified by state diagram shown in Figure 43-6 and associated definitions in 43.2.9.1.	M	Yes [ ]

43.7.9 System identification

Item	Feature	Subclause	Value/Comment	Status	Support
SID1	Globally unique identifier	43.3.2	Globally administered individual MAC address plus System Priority	M	Yes [ ]
SID2	MAC address chosen	43.3.2	MAC address associated with one of the ports	O	Yes [ ] No [ ]

43.7.10 Aggregator identification

Item	Feature	Subclause	Value/Comment	Status	Support
AID1	Globally unique identifier	43.3.3	Globally administered individual MAC address	M	Yes [ ]
AID2	Integer identifier	43.3.3	Uniquely identifies the Aggregator within the System	M	Yes [ ]
*AID3	Unique identifier allocated	43.3.3	Unique identifier assigned to one of its bound ports	O	Yes [ ] No [ ]
AID4			Unique identifier not assigned to any other Aggregator	!AID3 :M	N/A [ ] M:Yes [ ]

43.7.11 Port identification

Item	Feature	Subclause	Value/Comment	Status	Support
PID1	Port identifiers	43.3.4	Unique within a System; port number 0 not used for any port	M	Yes [ ]

Copyright © 2000 IEEE. All rights reserved.
Authorized licensed use limited to: N.C. State University Libraries - Acquisitions & Discovery S. Downloaded on November 14,2023 at 14:15:01 UTC from IEEE Xplore. Restrictions apply.
Cisco v. Corrigent - IPR2023-00447
Patent Owner Corrigent Exhibit 2012-0162

43.7.12 Capability identification

Item	Feature	Subclause	Value/Comment	Status	Support
CID1	Administrative and operational Key values associated with each port	43.3.5		M	Yes [ ]
CID2	Administrative and operational Key values associated with each Aggregator	43.3.5		M	Yes [ ]

43.7.13 Link Aggregation Group identification

Item	Feature	Subclause	Value/Comment	Status	Support
LAG1	LAG ID component values	43.3.6.1	Actor's values non-zero. Partner's admin values only zero for Individual ports	M	Yes [ ]

43.7.14 Detaching a link from an Aggregator

Item	Feature	Subclause	Value/Comment	Status	Support
DLA1	Effect on conversation reallocated to a different link	43.3.13	Frame ordering preserved	M	Yes [ ]

43.7.15 LACPDU structure

Item	Feature	Subclause	Value/Comment	Status	Support
LPS1	LACPDU Frame format	43.4.2.2	Not Tagged	M	Yes [ ]
LPS2	LACPDU structure	43.4.2.2	As shown in Figure 43-7 and as described	M	Yes [ ]
LPS3	LACPDU structure	43.4.2	All Reserved octets ignored on receipt and transmitted as zero	M	Yes [ ]

Copyright © 2000 IEEE. All rights reserved.

Authorized licensed use limited to: N.C. State University Libraries - Acquisitions & Discovery S. Downloaded on November 14,2023 at 14:15:01 UTC from IEEE Xplore. Restrictions apply.

Cisco v. Corrigent - IPR2023-00447
Patent Owner Corrigent Exhibit 2012-0163

43.7.16 State machine variables

Item	Feature	Subclause	Value/Comment	Status	Support
SMV1	Partner_Admin_Port_State	43.4.7	Collecting set to the same value as Synchronization	M	Yes [ ]
SMV2	LACP_Enabled	43.4.8	FALSE for half duplex ports, otherwise TRUE	M	Yes [ ]

43.7.17 Receive machine

Item	Feature	Subclause	Value/Comment	Status	Support
RM1	Receive machine	43.4.12	As defined in Figure 43-10 and associated parameters	M	Yes [ ]
RM2	Validation of LACPDUs		No validation of Version Number, TLV_type, or Reserved fields	M	Yes [ ]

43.7.18 Periodic Transmission machine

Item	Feature	Subclause	Value/Comment	Status	Support
PM1	Periodic Transmission machine	43.4.13	As defined in Figure 43-11 and associated parameters	M	Yes [ ]

Copyright © 2000 IEEE. All rights reserved.
Authorized licensed use limited to: N.C. State University Libraries - Acquisitions & Discovery S. Downloaded on November 14,2023 at 14:15:01 UTC from IEEE Xplore. Restrictions apply.
Cisco v. Corrigent - IPR2023-00447
Patent Owner Corrigent Exhibit 2012-0164

43.7.19 Selection Logic

Item	Feature	Subclause	Value/Comment	Status	Support
	Selection logic requirements	43.4.14.1			
SLM1	Aggregator support		At least one Aggregator per System	M	Yes [ ]
SLM2	Port Keys		Each port assigned an operational Key	M	Yes [ ]
SLM3	Aggregator Keys		Each Aggregator assigned an operational Key	M	Yes [ ]
SLM4	Aggregator Identifiers		Each Aggregator assigned an identifier	M	Yes [ ]
SLM5	Aggregator selection		If same Key assignment as port	M	Yes [ ]
SLM6	Ports that are members of the same Link Aggregation Group		Ports select same Aggregator	M	Yes [ ]
SLM7	Pair of ports connected in loop-back		Not select same Aggregator as each other	M	Yes [ ]
SLM8	Port required to be Individual		Not select same Aggregator as any other port	M	Yes [ ]
SLM9	Port is Aggregatable		Not select same Aggregator as any Individual port	M	Yes [ ]
SLM10	Port unable to select an Aggregator		Port not attached to any Aggregator	M	Yes [ ]
SLM11	Further aggregation constraints		Ports may be selected as standby	O	Yes [ ] No [ ]
SLM12	Selected variable		Set to SELECTED or STANDBY once Aggregator is determined	M	Yes [ ]
SLM13	Port enabled		Only when selected and attached to an Aggregator	M	Yes [ ]
SLM14	Recommended default operation of Selection Logic	43.4.14.2	Meets requirements of 43.4.14.2	O	Yes [ ] No [ ]

43.7.20 Mux machine

Item	Feature	Subclause	Value/Comment	Status	Support
XM1	Mux machine	43.4.15	As defined in Figure 43-13 or Figure 43-14, and associated parameters	M	Yes [ ]

Copyright © 2000 IEEE. All rights reserved.

Authorized licensed use limited to: N.C. State University Libraries - Acquisitions & Discovery S. Downloaded on November 14,2023 at 14:15:01 UTC from IEEE Xplore. Restrictions apply.
Cisco v. Corrigent - IPR2023-00447
Patent Owner Corrigent Exhibit 2012-0165

43.7.21 Transmit machine

Item	Feature	Subclause	Value/Comment	Status	Support
	Transmitted in outgoing LACP-DUs	43.4.16			
TM1	Actor_Port and Actor_Port_Priority			M	Yes [ ]
TM2	Actor_System and Actor_System_Priority			M	Yes [ ]
TM3	Actor_Key			M	Yes [ ]
TM4	Actor_State			M	Yes [ ]
TM5	Partner_Port and Partner_Port_Priority			M	Yes [ ]
TM6	Partner_System and Partner_System_Priority			M	Yes [ ]
TM7	Partner_Key			M	Yes [ ]
TM8	Partner_State			M	Yes [ ]
TM9	CollectorMaxDelay			M	Yes [ ]
TM10	Action when Periodic machine is in the NO_PERIODIC state	43.4.16	Set NTT to FALSE, do not transmit	M	Yes [ ]
TM11	Action when LACP_Enabled is TRUE, NTT is TRUE, and not rate limited	43.4.16	Properly formatted LACPDU transmitted	M	Yes [ ]
TM12	Action when LACP_Enabled is TRUE and NTT is TRUE, when rate limit is in force	43.4.16	Transmission delayed until limit is no longer in force	M	Yes [ ]
TM13	Action when LACPDU has been transmitted	43.4.16	Set NTT to FALSE	M	Yes [ ]
TM14	Action when LACP_Enabled is FALSE	43.4.16	Set NTT to FALSE, do not transmit	M	Yes [ ]

43.7.22 Churn Detection machines

Item	Feature	Subclause	Value/Comment	Status	Support
CM1	Churn Detection machines	43.4.17	As defined in Figure 43-15 and Figure 43-16	CM:M	N/A [ ] Yes [ ]

Copyright © 2000 IEEE. All rights reserved.
Authorized licensed use limited to: N.C. State University Libraries - Acquisitions & Discovery S. Downloaded on November 14,2023 at 14:15:01 UTC from IEEE Xplore. Restrictions apply.
Cisco v. Corrigent - IPR2023-00447
Patent Owner Corrigent Exhibit 2012-0166

43.7.23 Marker protocol

Item	Feature	Subclause	Value/Comment	Status	Support
FP1	Respond to all received Marker PDUs	43.5.1	As specified by 43.5.4	M	Yes [ ]
FP2	Use of the Marker protocol	43.5.1	As specified by 43.5.4	O	Yes [ ] No [ ]
FP3	MARKER.request service primitives request rate	43.5.4.1	Maximum of five during any one-second period	MG:M	N/A [ ] Yes [ ]
FP4	Marker PDU Frame format	43.5.3.2	Not Tagged	MG:M	N/A [ ] Yes [ ]
FP5	Marker Response PDU Frame format	43.5.3.2	Not Tagged	M	Yes [ ]
FP6	Marker PDU structure	43.5.3.2	As shown in Figure 43-18 and as described	MG:M	N/A [ ] Yes [ ]
FP7	Marker Response PDU structure	43.5.3.2	As shown in Figure 43-18 and as described	M	Yes [ ]
FP8	Marker Responder State Diagram	43.5.4.2	As specified in Figure 43-19 and 43.5.4.2.1 through 43.5.4.2.3	M	Yes [ ]
FP9	Validation of Marker Request PDUs	43.5.4.2.3	Marker Responder shall not validate the Version Number, Pad, or Reserved fields	M	Yes [ ]

43.7.24 Configuration capabilities and restrictions

Item	Feature	Subclause	Value/Comment	Status	Support
CCR1	Algorithm used to determine subset of ports that will be aggregated in Systems that have limited aggregation capability	43.6.1	As specified in items a) to e) of 43.6.1	M	Yes[ ]
CCR2	Key value modification to generate optimum aggregation	43.6.2		O	Yes [ ] No [ ]
CCR3	Key value modification when System has higher System Aggregation Priority			CCR2:M	N/A [ ] M:Yes [ ]
CCR4	Key value modification when System has lower System Aggregation Priority			CCR2:X	N/A [ ] X:Yes [ ]

Copyright © 2000 IEEE. All rights reserved.

Authorized licensed use limited to: N.C. State University Libraries - Acquisitions & Discovery S. Downloaded on November 14,2023 at 14:15:01 UTC from IEEE Xplore. Restrictions apply.
Cisco v. Corrigent - IPR2023-00447
Patent Owner Corrigent Exhibit 2012-0167

43.7.25 Link Aggregation on shared-medium links

Item	Feature	Subclause	Value/Comment	Status	Support
LSM1	Shared-medium links—Configuration	43.6.3	Configured as Individual links	M	Yes [ ]
LSM2	Shared-medium links—Operation of LACP	43.6.3	LACP is disabled	M	Yes [ ]

Copyright © 2000 IEEE. All rights reserved.
Authorized licensed use limited to: N.C. State University Libraries - Acquisitions & Discovery S. Downloaded on November 14,2023 at 14:15:01 UTC from IEEE Xplore. Restrictions apply.
Cisco v. Corrigent - IPR2023-00447
Patent Owner Corrigent Exhibit 2012-0168

Annex 43A

(informative)

Collection and Distribution functions

43A.1 Introduction

The specification of the Collection and Distribution functions was defined with the following considerations in mind:

a) Frame duplication is not permitted.
b) Frame ordering must be preserved in aggregated links. Strictly, the MAC service specification (ISO/IEC 15802-1) states that order must be preserved for frames with a given SA, DA, and priority; however, this is a tighter constraint than is absolutely necessary. There may be multiple, logically independent conversations in progress between a given SA-DA pair at a given priority; the real requirement is to maintain ordering within a conversation, though not necessarily between conversations.
c) A single algorithm can be defined for the collection function that is independent of the distribution function(s) employed by the Partner System.
d) In the interests of simplicity and scalability, the collection function should not perform re-assembly functions, re-order received frames, or modify received frames. Distribution functions, therefore, do not make use of segmentation techniques, do not label or otherwise modify transmitted frames in any way, and must operate in a manner that will inherently ensure proper ordering of received frames with the specified collector.
e) The distribution and collection functions need to be capable of handling dynamic changes in aggregation membership.
f) There are expected to be many different topologies and many different types of devices in which Link Aggregation will be employed. It is therefore unlikely that a single distribution function will be applicable in all cases.

A simple collection function has been specified. The Collector preserves the order of frames received on a given link, but does not preserve frame ordering amongst links. The distribution function maintains frame ordering by

— Transmitting frames of a given conversation on a single link at any time.
— Before changing the link on which frames of a given conversation are transmitted, ensuring that all previously transmitted frames of that conversation have been received to a point such that any subsequently transmitted frames received on a different links will be delivered to the MAC Client at a later time.

Given the wide variety of potential distribution algorithms, the normative text in Clause 43 specifies only the requirements that such algorithms must meet, and not the details of the algorithms themselves. To clarify the intent, this informative annex gives examples of distribution algorithms, when they might be used, and the role of the Marker protocol (43.5) in their operation. The examples are not intended to be either exhaustive or prescriptive; implementors may make use of any distribution algorithms as long as the requirements of Clause 43 are met.

Copyright © 2000 IEEE. All rights reserved.

Authorized licensed use limited to: N.C. State University Libraries - Acquisitions & Discovery S. Downloaded on November 14,2023 at 14:15:01 UTC from IEEE Xplore. Restrictions apply.

Cisco v. Corrigent - IPR2023-00447
Patent Owner Corrigent Exhibit 2012-0169

43A.2 Port selection

A distribution algorithm selects the port used to transmit a given frame, such that the same port will be chosen for subsequent frames that form part of the same conversation. The algorithm may make use of information carried in the frame in order to make its decision, in combination with other information associated with the frame, such as its reception port in the case of a MAC Bridge.

The algorithm may assign one or more conversations to the same port, however, it must not allocate some of the frames of a given conversation to one port and the remainder to different ports. The information used to assign conversations to ports could include the following:

a) Source MAC address
b) Destination MAC address
c) The reception port
d) The type of destination address (individual or group MAC address)
e) Ethernet Length/Type value (i.e., protocol identification)
f) Higher layer protocol information (e.g., addressing and protocol identification information from the LLC sublayer or above)
g) Combinations of the above

One simple approach applies a hash function to the selected information to generate a port number. This produces a deterministic (i.e., history independent) port selection across a given number of ports in an aggregation. However, as it is difficult to select a hash function that will generate a uniform distribution of load across the set of ports for all traffic models, it might be appropriate to weight the port selection in favor of ports that are carrying lower traffic levels. In more sophisticated approaches, load balancing is dynamic; i.e., the port selected for a given set of conversations changes over time, independent of any changes that take place in the membership of the aggregation.

43A.3 Dynamic reallocation of conversations to different ports

It may be necessary for a given conversation or set of conversations to be moved from one port to one or more others, as a result of

a) An existing port being removed from the aggregation,
b) A new port being added to the aggregation, or
c) A decision on the part of the Distributor to re-distribute the traffic across the set of ports.

Before moving conversation(s) to a new port, it is necessary to ensure that all frames already transmitted that are part of those conversations have been successfully received. The following procedure shows how the Marker protocol (43.5) can be used to ensure that no mis-ordering of frames occurs:

1) Stop transmitting frames for the set of conversations affected. If the MAC Client requests transmission of further frames that are part of this set of conversations, these frames are discarded.
2) Start a timer, choosing the timeout period such that, if the timer expires, the destination System can be assumed either to have received or discarded all frames transmitted prior to starting the timer.
3) Use the Marker protocol to send a Marker PDU on the port previously used for this set of conversations.
4) Wait until either the corresponding Marker Response PDU is received or the timer expires.
5) Restart frame transmission for the set of conversations on the newly selected port.

The appropriate timeout value depends on the connected devices. For example, the recommended maximum Bridge Transit Delay is 1 second; if the receiving device is a MAC Bridge, it may be expected to have

Copyright © 2000 IEEE. All rights reserved.
Authorized licensed use limited to: N.C. State University Libraries - Acquisitions & Discovery S. Downloaded on November 14,2023 at 14:15:01 UTC from IEEE Xplore. Restrictions apply.
Cisco v. Corrigent - IPR2023-00447
Patent Owner Corrigent Exhibit 2012-0170

forwarded or discarded all frames received more than 1 second ago. The appropriate timeout value for other circumstances could be smaller or larger than this by several orders of magnitude. For example, if the two Systems concerned are high-performance end stations connected via Gigabit Ethernet links, then timeout periods measured in milliseconds might be more appropriate. In order to allow an appropriate timeout value to be determined, the Frame Collector parameter CollectorMaxDelay (see 43.2.3) defines the maximum delay that the collector can introduce between receiving a frame from a port and either delivering it to the MAC Client or discarding it. This value will be dependent upon the particular implementation choices that have been made in a System. As far as the operation of the Collector state machine is concerned, CollectorMaxDelay is a constant; however, a management attribute, aAggCollectorMaxDelay (30.7.1.1.31), is provided that allows interrogation and administative control of its value. Hence, if a System knows the value of CollectorMaxDelay that is in use by a Partner System, it can set the value of timeout used when flushing a link to be equal to that value of CollectorMaxDelay, plus sufficient additional time to allow for the propagation delay experienced by frames between the two Systems. A value of zero for the CollectorMaxDelay parameter indicates that the delay imposed by the Collector is less than the resolution of the parameter (10 microseconds). In this case, the delay that must be considered is the physical propagation delay of the channel. Allowing management manipulation of CollectorMaxDelay permits fine-tuning of the value used in those cases where it may be difficult for the equipment to pre-configure a piece of equipment with a realistic value for the physical propagation delay of the channel.

The Marker protocol provides an optimization that can result in faster reallocation of conversations than would otherwise be possible—without the use of markers, the full timeout period would always have to be used in order to be sure that no frames remained in transit between the local Distributor and the remote Collector. The timeout described recovers from loss of Marker or Marker Response PDUs that can occur.

43A.4 Topology considerations in the choice of distribution algorithm

Figure 43A-1 gives some examples of different aggregated link scenarios. In some cases, it is possible to use distribution algorithms that use MAC frame information to allocate conversations to links; in others, it is necessary to make use of higher-layer information.

In example A, there is a many-to-many relationship between end stations communicating over the aggregated link. It would be possible for each switch to allocate conversations to links simply on the basis of source or destination MAC addresses.

In examples B and C, a number of end stations communicate with a single server via the aggregated link. In these cases, the distribution algorithm employed in the server or in Switch 2 can allocate traffic from the server on the basis of destination MAC address; however, as one end of all conversations constitutes a single server with a single MAC address, traffic from the end stations to the server would have to be allocated on the basis of source MAC address. These examples illustrate the fact that different distribution algorithms can be used in different devices, as appropriate to the circumstances. The collection function is independent of the distribution function(s) that are employed.

In examples D and E, assuming that the servers are using a single MAC address for all of their traffic, the only appropriate option is for the distribution algorithm used in the servers and switches to make use of higher-layer information (e.g., Transport Layer socket identifiers) in order to allocate conversations to links. Alternatively, in example E, if the servers were able to make use of multiple MAC addresses and allocate conversations to them, then the switches could revert to MAC Address-based allocation.

Copyright © 2000 IEEE. All rights reserved.

Authorized licensed use limited to: N.C. State University Libraries - Acquisitions & Discovery S. Downloaded on November 14,2023 at 14:15:01 UTC from IEEE Xplore. Restrictions apply.

Cisco v. Corrigent - IPR2023-00447
Patent Owner Corrigent Exhibit 2012-0171

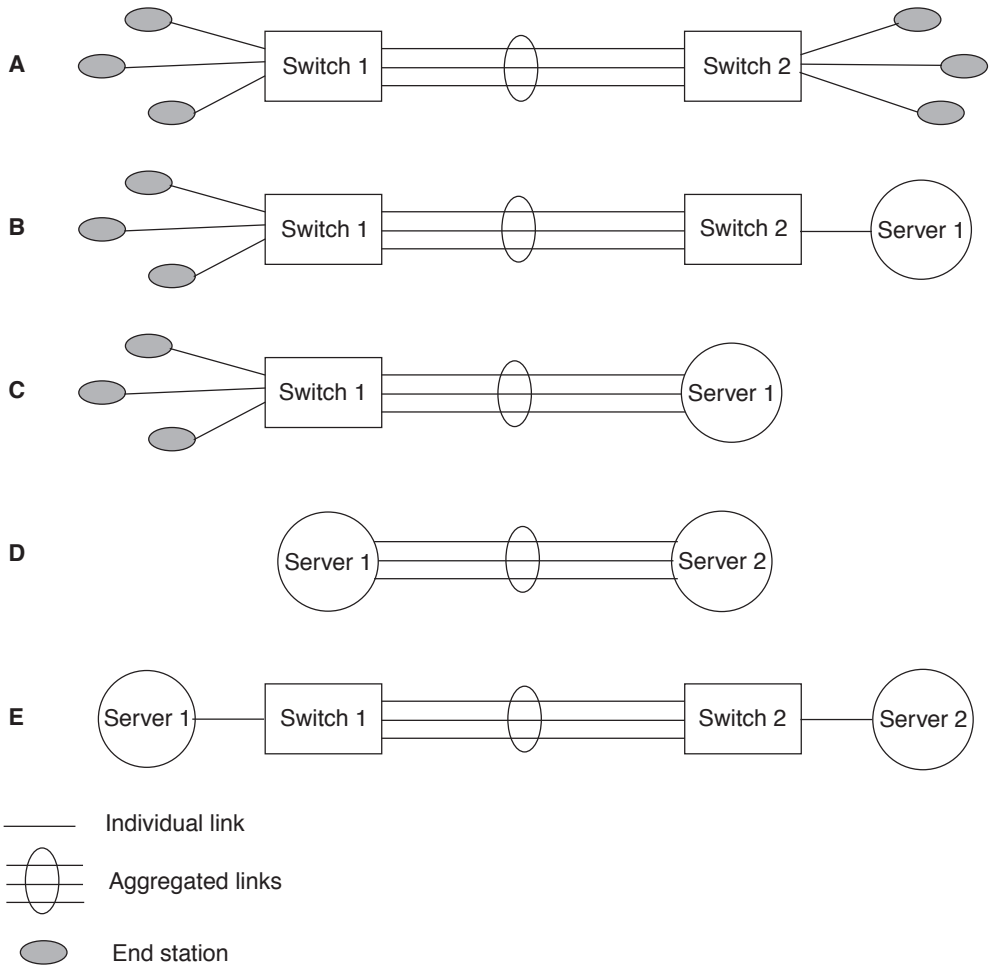

Figure 43A-1—Link aggregation topology examples

Copyright © 2000 IEEE. All rights reserved.
Authorized licensed use limited to: N.C. State University Libraries - Acquisitions & Discovery S. Downloaded on November 14,2023 at 14:15:01 UTC from IEEE Xplore. Restrictions apply.
Cisco v. Corrigent - IPR2023-00447
Patent Owner Corrigent Exhibit 2012-0172

Annex 43B

(normative)

Requirements for support of Slow Protocols

43B.1 Introduction and rationale

There are two distinct classes of protocols used to control various aspects of the operation of IEEE 802.3 devices. They are as follows:

a) Protocols such as the MAC Control PAUSE operation (Annex 31B) that need to process and respond to PDUs rapidly in order to avoid performance degradation. These are likely to be implemented as embedded hardware functions, making it relatively unlikely that existing equipment could be easily upgraded to support additional such protocols.

NOTE—This consideration was one of the contributing factors in the decision to use a separate group MAC address to support LACP and the Marker protocol, rather than re-using the group MAC address currently used for PAUSE frames.

b) Protocols such as LACP, with less stringent frequency and latency requirements. These may be implemented in software, with a reasonable expectation that existing equipment be upgradeable to support additional such protocols, depending upon the approach taken in the original implementation.

In order to place some realistic bounds upon the demands that might be placed upon such a protocol implementation, this annex defines the characteristics of this class of protocols and identifies some of the behaviors that an extensible implementation needs to exhibit.

43B.2 Slow Protocol transmission characteristics

Protocols that make use of the addressing and protocol identification mechanisms identified in this annex are subject to the following constraints:

a) No more than 5 frames shall be transmitted in any one-second period.
b) The maximum number of Slow Protocols is 10.

NOTE—This is the maximum number of Slow Protocols that use the specified protocol type defined here. That is, there may be more than 10 slow protocols in the universe, but no more than 10 may map to the same Ethernet Length/Type field.

c) The MAC Client data generated by any of these protocols shall be in the normal length range for an IEEE 802.3 MAC frame, as specified in 4.4.2. It is recommended that the maximum length for a Slow Protocol frame be limited to 128 octets.

NOTE—The Slow Protocols specified in Clause 43 (i.e., LACP and Marker) conform to this recommended maximum.

d) PDUs generated by these protocols shall use the Basic and not the Tagged frame format (see Clause 3).

The effect of these restrictions is to restrict the bandwidth consumed and performance demanded by this set of protocols; the absolute maximum traffic loading that would result is 50 maximum length frames per second per link.

Copyright © 2000 IEEE. All rights reserved.

Authorized licensed use limited to: N.C. State University Libraries - Acquisitions & Discovery S. Downloaded on November 14,2023 at 14:15:01 UTC from IEEE Xplore. Restrictions apply.

Cisco v. Corrigent - IPR2023-00447
Patent Owner Corrigent Exhibit 2012-0173

43B.3 Addressing

The Slow_Protocols_Multicast address has been allocated exclusively for use by Slow Protocols PDUs; its value is identified in Table 43B-1.

Table 43B-1—Slow_Protocols_Multicast address

Name	Value
Slow_Protocols_Multicast address	01-80-C2-00-00-02

NOTES

1—This address is within the range reserved by ISO/IEC 15802-3 (MAC Bridges) for link-constrained protocols. As such, frames sent to this address will not be forwarded by conformant MAC Bridges; its use is restricted to a single link.

2—Although the two currently existing Slow Protocols (i.e., LACP and the Marker protocol) always use this MAC address as the destination address in transmitted PDUs, this may not be true for all Slow Protocols. In some yet-to-be-defined protocol, unicast addressing may be appropriate and necessary. Rather, the requirement is that this address not be used by any protocols that are not Slow Protocols.

43B.4 Protocol identification

All Slow Protocols use Type-field encoding of the Length/Type field, and use the Slow_Protocols_Type value as the primary means of protocol identification; its value is shown in Table 43B-2.

Table 43B-2—Slow_Protocols_Type field

Name	Value
Slow_Protocols_Type field	88-09

The first octet of the MAC Client data following the Length/Type field is a protocol subtype identifier that distinguishes between different Slow Protocols. Table 43B-3 identifies the semantics of this subtype.

NOTE—Although this mechanism is defined as part of an IEEE 802.3 standard, it is the intent that the reserved code points in this table will be made available to protocols defined by other working groups within IEEE 802, should this mechanism be appropriate for their use.

Copyright © 2000 IEEE. All rights reserved.
Authorized licensed use limited to: N.C. State University Libraries - Acquisitions & Discovery S. Downloaded on November 14,2023 at 14:15:01 UTC from IEEE Xplore. Restrictions apply.
Cisco v. Corrigent - IPR2023-00447
Patent Owner Corrigent Exhibit 2012-0174

Table 43B-3—Slow Protocols subtypes

Protocol Subtype value	Protocol name
0	Unused—Illegal value
1	Link Aggregation Control Protocol (LACP)
2	Link Aggregation—Marker Protocol
3	Reserved for future use
4	Reserved for future use
5	Reserved for future use
6	Reserved for future use
7	Reserved for future use
8	Reserved for future use
9	Reserved for future use
10	Reserved for future use
11–255	Unused—Illegal values

43B.5 Handling of Slow Protocol frames

Any received MAC frame that carries the Slow_Protocols_Type field value is assumed to be a Slow Protocol frame. An implementation that claims conformance to this standard shall handle all Slow Protocol frames as follows:

a) Discard any Slow Protocol frame that carries an illegal value of Protocol Subtype (see Table 43B-3). Such frames shall not be passed to the MAC Client.

b) Pass any Slow Protocol frames that carry Protocol Subtype values that identify supported Slow Protocols to the protocol entity for the identified Slow Protocol.

c) Pass any Slow Protocol frames that carry Protocol Subtype values that identify unsupported Slow Protocols to the MAC Client.

NOTE—The intent of these rules is twofold. First, they rigidly enforce the maximum number of Slow Protocols, ensuring that early implementations of this mechanism do not become invalidated as a result of "scope creep." Second, they make it clear that the appropriate thing to do in any embedded frame parsing mechanism is to pass frames destined for unsupported protocols up to the MAC Client rather than discarding them, thus allowing for the possibility that, in soft configurable systems, the MAC Client might be enhanced in the future in order to support protocols that were not implemented in the hardware.

Copyright © 2000 IEEE. All rights reserved.

Authorized licensed use limited to: N.C. State University Libraries - Acquisitions & Discovery S. Downloaded on November 14,2023 at 14:15:01 UTC from IEEE Xplore. Restrictions apply.

Cisco v. Corrigent - IPR2023-00447
Patent Owner Corrigent Exhibit 2012-0175

43B.6 Protocol Implementation Conformance Statement (PICS) proforma for Annex 43B, Requirements for support of Slow Protocols[6]

43B.6.1 Introduction

The supplier of an implementation that is claimed to conform to Annex 43B shall complete the following Protocol Implementation Conformance Statement (PICS) proforma.

A detailed description of the symbols used in the PICS proforma, along with instructions for completing the PICS proforma, can be found in Clause 21.

43B.6.2 Identification

43B.6.2.1 Implementation identification

Supplier (Note 1)	
Contact point for queries about the PICS (Note 1)	
Implementation Name(s) and Version(s) (Notes 1 and 3)	
Other information necessary for full identification—e.g., name(s) and version(s) of machines and/or operating system names (Note 2)	
NOTES 1—Required for all implementations. 2—May be completed as appropriate in meeting the requirements for the identification. 3—The terms Name and Version should be interpreted appropriately to correspond with a supplier's terminology (e.g., Type, Series, Model).	

43B.6.2.2 Protocol summary

Identification of protocol specification	IEEE Std 802.3ad-2000, Annex 43B, Requirements for support of Slow Protocols.
Identification of amendments and corrigenda to the PICS proforma which have been completed as part of the PICS	
Have any Exception items been required? No [ ] Yes [ ] (See Clause 21: the answer Yes means that the implementation does not conform to IEEE Std 802.3ad-2000, Annex 43B, Requirements for support of Slow Protocols.)	

Date of Statement	

[6]*Copyright release for PICS proformas:* Users of this standard may freely reproduce the PICS proforma in this annex so that it can be used for its intended purpose and may further publish the completed PICS.

Copyright © 2000 IEEE. All rights reserved.
Authorized licensed use limited to: N.C. State University Libraries - Acquisitions & Discovery S. Downloaded on November 14,2023 at 14:15:01 UTC from IEEE Xplore. Restrictions apply.
Cisco v. Corrigent - IPR2023-00447
Patent Owner Corrigent Exhibit 2012-0176

43B.6.2.3 Transmission characteristics

Item	Feature	Subclause	Value/Comment	Status	Support
SP1	Transmission rate	43B.2	Max 5 frames in any one-second period	M	Yes [ ]
SP2	Frame size	43B.2	Normal IEEE 802.3 frame size range (see 4.4.2)	M	Yes [ ]
SP3	Frame format	43B.2	Basic (not Tagged) frame format	M	Yes [ ]

43B.6.2.4 Frame handling

Item	Feature	Subclause	Value/Comment	Status	Support
FH1	Handling of Slow Protocol frames	43B.5	As specified in 43B.5	M	Yes [ ]

Copyright © 2000 IEEE. All rights reserved.

Authorized licensed use limited to: N.C. State University Libraries - Acquisitions & Discovery S. Downloaded on November 14,2023 at 14:15:01 UTC from IEEE Xplore. Restrictions apply.

Cisco v. Corrigent - IPR2023-00447
Patent Owner Corrigent Exhibit 2012-0177

Annex 43C

(informative)

LACP standby link selection and dynamic Key management

43C.1 Introduction

While any two ports on a given system that have been assigned the same administrative Key may be capable of aggregation, it is not necessarily the case that an arbitrary selection of such ports can be aggregated. (Keys may have been deliberately assigned to allow one link to be operated specifically as a hot standby for another). A system may reasonably limit the number of ports attached to a single Aggregator, or the particular way more than two ports can be combined.

In cases where both communicating systems have constraints on aggregation, it is necessary for them both to agree to some extent on the links to be selected for aggregation and on which not to use. Otherwise it might be possible for the two systems to make different selections, possibly resulting in no communication at all.

When one or more links have to be selected as standby, it is possible that they could be used as part of a different Link Aggregation Group. For this to happen, one or another of the communicating systems has to change the operational Key values used for the ports attached to those links.

If the operational Key values were to be changed independently by each system, the resulting set of aggregations could be unpredictable. It is possible that numerous aggregations, each containing a single link, may result. Worse, with no constraint on changes, the process of both systems independently searching for the best combination of operational Key values may never end.

This annex describes protocol rules for standby link selection and dynamic Key management. It provides examples of a dynamic Key management algorithm applied to connections between systems with various aggregation constraints.

43C.2 Goals

The protocol rules presented

a) Enable coordinated, predictable, and reproducible standby link selections.
b) Permit predictable and reproducible partitioning of links into aggregations by dynamic Key management.

They do not require

c) A LACP system to understand all the constraints on aggregations of multiple ports that might be imposed by other systems.
d) Correct configuration of parameters, i.e., they retain the plug and play attributes of LACP.

Copyright © 2000 IEEE. All rights reserved.
Authorized licensed use limited to: N.C. State University Libraries - Acquisitions & Discovery S. Downloaded on November 14,2023 at 14:15:01 UTC from IEEE Xplore. Restrictions apply.
Cisco v. Corrigent - IPR2023-00447
Patent Owner Corrigent Exhibit 2012-0178

43C.3 Standby link selection

Every link between systems operating LACP is assigned a unique priority. This priority comprises (in priority order) the System Priority, System ID, Port Priority, and Port Number of the higher-priority system. In priority comparisons, numerically lower values have higher priority.

Ports are considered for active use in an aggregation in link priority order, starting with the port attached to the highest priority link. Each port is selected for active use if preceding higher priority selections can also be maintained, otherwise the port is selected as standby.

43C.4 Dynamic Key management

Dynamic Key management changes the Key values used for links that either system has selected as a standby to allow use of more links. Whether this is desirable depends on their use. For example, if a single spanning tree is being used throughout the network, separating standby links into a separate aggregation serves little purpose. In contrast, if equal cost load sharing is being provided by routing, making additional bandwidth available in a separate Link Aggregation Group may be preferable to holding links in standby to provide link resilience.

The communicating system with the higher priority (as determined by System Priority and unique System ID) controls dynamic Key changes. Dynamic Key changes may only be made by this controlling system.

NOTE—The controlling system can observe the port priorities assigned by the Partner system, if it wishes to take these into account.

This rule prevents the confusion that could arise if both systems change Keys simultaneously. In principle the controlling system might search all possible Key combinations for the best way to partition the links into groups. In practice the number of times that Keys may have to be changed to yield acceptable results is small.

After each Key change, the controlling system assesses which links are being held in standby by its Partner. Although there is no direct indication of this decision, standby links will be held OUT_OF_SYNC. After matched information is received from the protocol Partner, and before acting on this information, a “settling time” allows for the Partner’s aggregate wait delay, and for the selected links to be aggregated. Twice the Aggregate Wait Time (the expiry period for the wait_while_timer), i.e., 4 seconds, should be ample. If matched Partner information indicates that all the links that the Actor can make active have been brought IN_SYNC, it can proceed to change Keys on other links without further delay.

43C.5 A dynamic Key management algorithm

The following algorithm is simple but effective.

After the “settling time” (see 43C.4) has elapsed, the controlling system scans its ports in the Link Aggregation Group (i.e., all those ports with a specific operational Key value that have the same Partner System Priority, System ID, and Key) in descending priority order.

For each port, it may wish to know

a) Is the port (i.e., the Actor) *capable* of being aggregated with the ports already selected for aggregation with the current Key? Alternatively is the Actor *not capable* of this aggregation?
b) Is the port’s Partner IN_SYNC or is the Partner OUT_OF_SYNC?

Copyright © 2000 IEEE. All rights reserved.

Authorized licensed use limited to: N.C. State University Libraries - Acquisitions & Discovery S. Downloaded on November 14,2023 at 14:15:01 UTC from IEEE Xplore. Restrictions apply.

Cisco v. Corrigent - IPR2023-00447
Patent Owner Corrigent Exhibit 2012-0179

And as it inspects each port it may

c) *Select* the port to be part of the aggregation with the current Key.
d) *Retain* the current Key for a further iteration of the algorithm, without selecting the port to be part of the current aggregation.
e) *Change* the operational Key to a new value. Once a new value is chosen, all the ports in the current Link Aggregation Group that have their Keys changed will be changed to this new value.

As the ports are scanned for the first time

1) The highest priority port is always selected.

   If it is capable and IN_SYNC, move to step 2).

   Otherwise, **change** the operational Key of all other ports (if any) in this Link Aggregation Group, and apply this dynamic Key algorithm to those ports, beginning with step 1), after the settling time.

2) Move to the next port.

   IF there is a next port, continue at step 3).

   Otherwise, dynamic Key changes for ports with this operational Key are complete.

   Note that ports that were once in the same aggregation may have had their operational Keys changed to (further) new values. If so, apply the dynamic Key management algorithms to those ports, beginning with step 1), after the settling time.

3) If this port is capable and IN_SYNC:

   select it, and repeat from step 2).

   If this port is OUT_OF_SYNC:

   change the operational Key, and repeat from step 2).

   If this port is not capable but IN_SYNC:

   change the operational Key, move to step 4).

4) Move to the next port.

   If there is a next port, continue at step 5).

   Otherwise If there are still ports in the current Link Aggregation Group (which will have the current operational Key), wait for the settling time and appy the dynamic Key management algorithm, beginning with the first such port, at step 3).

   Otherwise, dynamic Key changes for ports with this operational Key are complete.

5) **If** this port is capable:

   retain the current Key and repeat from step 2).

   Otherwise, **change** the operational Key and repeat from step 2).

Copyright © 2000 IEEE. All rights reserved.
Authorized licensed use limited to: N.C. State University Libraries - Acquisitions & Discovery S. Downloaded on November 14,2023 at 14:15:01 UTC from IEEE Xplore. Restrictions apply.
Cisco v. Corrigent - IPR2023-00447
Patent Owner Corrigent Exhibit 2012-0180

This procedure is repeated until no OUT_OF_SYNC links remain, or a limit on the number of steps has been reached.

If the Partner's System ID changes on any link at any time, the Actor's operational Key for that link should revert to the administrative Key value, and the dynamic Key procedure should be rerun. This may involve changing the operational Key values for all the links that were assigned Key values subsequent to the change in Key for the link with the new Partner.

43C.6 Example 1

Two systems, A and B, are connected by four parallel links. Each system can support a maximum of two links in an aggregation. They are connected as shown in Figure 43C–1. System A is the higher priority system.

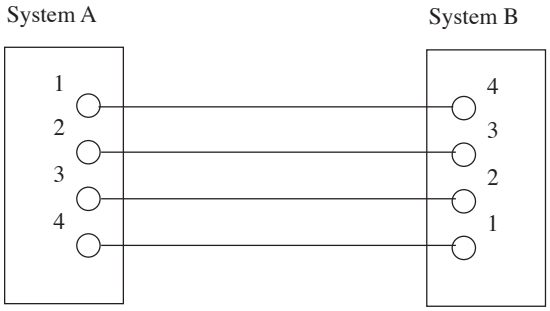

Figure 43C-1—Example 1

The administrative Key for all of System A and System B's ports is 1. Neither system knows before the configuration is chosen that all its ports would attach to links of the same Partner system. Equally, if the links were attached to two different systems, it is not known which pair of links (e.g., 1 and 2, or 1 and 4) would be attached to the same Partner. So choosing the administrative Keys values to be identical for four ports, even though only two could be actively aggregated, is very reasonable.

If there was no rule for selecting standby links, System A and System B might have both selected their own ports 1 and 2 as the active links, and there would be no communication. With the rule, the links A1-B4 and A2-B3 will become active, while A3-B2 and A4-B1 will be standby.

Since System A is the higher-priority system, System B's operational Key values will remain 1 while System A may dynamically change Keys, though it may choose to retain the standby links. Following the Key management algorithm suggested, System A would be able to change the Keys for A3 and A4 in a little over 2 seconds (depending on how fast System B completes the process of attaching its ports to the selected Aggregator) after the connections were first made, and both aggregations could be operating within 5 seconds.

If System A's aggregations were to be constrained to a maximum of three links, rather than two, while System B's are still constrained to two, the suggested algorithm would delay for 4 seconds before changing Keys. Both aggregations could be operating within 7 seconds.

Copyright © 2000 IEEE. All rights reserved.

Authorized licensed use limited to: N.C. State University Libraries - Acquisitions & Discovery S. Downloaded on November 14,2023 at 14:15:01 UTC from IEEE Xplore. Restrictions apply.

Cisco v. Corrigent - IPR2023-00447
Patent Owner Corrigent Exhibit 2012-0181

43C.7 Example 2

A system has the odd design constraint that each of its four ports may be aggregated with one other as follows:

a) Port 1 with port 2, or port 4.
b) Port 2 with port 3, or port 1.
c) Port 3 with port 4, or port 2.
d) Port 4 with port 1, or port 3.

This is equivalent to each port being able to aggregate with either neighbor, understanding the ports to be arranged in a circle.

Two such systems are connected with four parallel links as shown in Figure 43C–2.

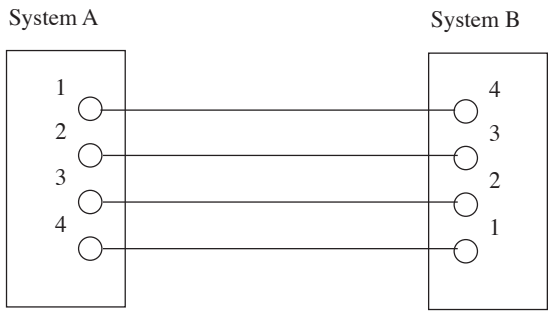

Figure 43C-2—Example 2a

Just as for Example 1, links A1-B4 and A2-B3 become active without changing the operational Key from its original administrative value. The Key for A3 and A4 is changed as soon as they become active, and a few seconds later A3-B2 and A4-B1 become active in a separate aggregation.

If the two systems had been connected as shown in Figure 43C–3:

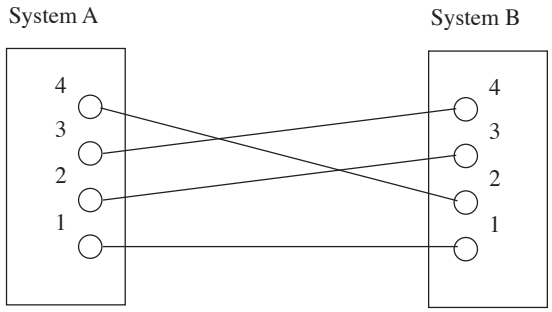

Figure 43C-3—Example 2b

the following would occur, assuming that System A operates the simple algorithm already described.

Copyright © 2000 IEEE. All rights reserved.
Authorized licensed use limited to: N.C. State University Libraries - Acquisitions & Discovery S. Downloaded on November 14,2023 at 14:15:01 UTC from IEEE Xplore. Restrictions apply.
Cisco v. Corrigent - IPR2023-00447
Patent Owner Corrigent Exhibit 2012-0182

Initially System A advertises an operational Key equal to the administrative Key value of 1 on all ports. System B first selects B1 as active; since the link connects to A1 it has the highest priority. The next highest priority link is B3-A2, but System B cannot aggregate B3 with B1, so System B makes this port standby. System B can aggregate B4-A3, so the port is made active. Finally if B4 is aggregated with B1, B2 cannot be aggregated, so B2 is made standby.

System A, observing the resulting synchronization status from System B, assigns a Key value of 2 to ports 2 and 3, retaining the initial Key of 1 for ports 1 and 4. System B will remove B4 from the aggregation with B1, and substitute B2. B3 and B4 will be aggregated. In the final configuration A1-B1 and A4-B2 are aggregated, as are A2-B3 and A3-B4.

Copyright © 2000 IEEE. All rights reserved.

Authorized licensed use limited to: N.C. State University Libraries - Acquisitions & Discovery S. Downloaded on November 14,2023 at 14:15:01 UTC from IEEE Xplore. Restrictions apply.

Cisco v. Corrigent - IPR2023-00447
Patent Owner Corrigent Exhibit 2012-0183