Exhibit 1001

US011083511B2

(12) **United States Patent**
Schifano et al.

(10) **Patent No.: US 11,083,511 B2**
(45) **Date of Patent: Aug. 10, 2021**

(54) **METHOD AND IMPLANT SYSTEM FOR SACROILIAC JOINT FIXATION AND FUSION**

(71) Applicant: **Orthocision Inc.**, Folsom, CA (US)

(72) Inventors: **Troy Schifano**, Morgantown, WV (US); **Steve Anderson**, Folsom, CA (US); **Teck-Mun Soo**, Southfield, MI (US); **Gowriharan Thaiyananthan**, Irvine, CA (US)

(*) Notice: Subject to any disclaimer, the term of this patent is extended or adjusted under 35 U.S.C. 154(b) by 0 days.

(21) Appl. No.: **16/718,189**

(22) Filed: **Dec. 18, 2019**

(65) **Prior Publication Data**

US 2020/0121375 A1 Apr. 23, 2020

Related U.S. Application Data

(63) Continuation of application No. 14/668,976, filed on Mar. 25, 2015, now Pat. No. 10,993,757, which is a
(Continued)

(51) **Int. Cl.**
A61B 17/88 (2006.01)
A61F 2/46 (2006.01)
(Continued)

(52) **U.S. Cl.**
CPC ***A61B 17/8872*** (2013.01); ***A61B 17/1757*** (2013.01); ***A61B 17/7055*** (2013.01);
(Continued)

(58) **Field of Classification Search**
CPC A61F 2002/4627; A61B 17/8872; A61B 17/1757; A61B 17/7055; A61B 17/8605; A61B 17/869; A61B 17/1671
See application file for complete search history.

(56) **References Cited**

U.S. PATENT DOCUMENTS

3,579,830 A 5/1971 Morel
4,481,020 A 11/1984 Lee et al.
(Continued)

FOREIGN PATENT DOCUMENTS

AU 728979 10/1998
AU 756550 5/2002
(Continued)

OTHER PUBLICATIONS

Globus Medical Inc, Descritpion of SI-LOK® Sacroiliac Fixation System, accessed on Mar. 18, 2013 from "https://www.globusmedical.com/mis/240-si-lok".
(Continued)

Primary Examiner — Tessa M Matthews
(74) *Attorney, Agent, or Firm* — Sierra IP Law, PC; William K. Nelson; Mark D. Miller

(57) **ABSTRACT**

An improved method of fusing the sacroiliac joint and tools for accomplishing the same is disclosed. In one embodiment, the present invention is a method that uses an intra-articular joint fusion device for connecting the sacrum and ilium that includes creating a first incision in the patient's skin proximal to the patient's sacroiliac joint, inserting a surgical channel tool into the incision from the patient's posterior, creating a void in the sacroiliac joint, inserting a fusion implant into the void, the fusion implant having at least one fixation element for engagement with bone tissue in the articular surfaces of the sacrum and the ilium, and driving the fusion implant into the void such that the at least one fixation element engages with bone tissue in an articular surface of at least one of the sacrum and ilium, and the fusion implant fixes relative positions of the sacrum and ilium.

23 Claims, 35 Drawing Sheets

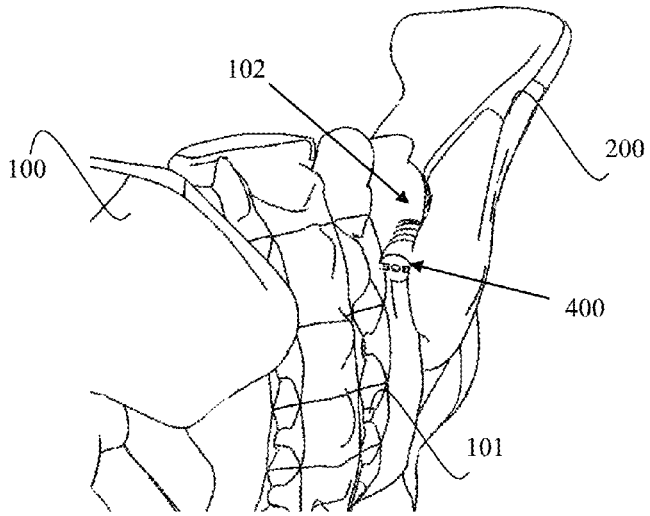

Related U.S. Application Data

continuation-in-part of application No. 13/842,227, filed on Mar. 15, 2013, now Pat. No. 9,119,732.

(51) **Int. Cl.**

A61B 17/17	(2006.01)
A61F 2/44	(2006.01)
A61B 17/86	(2006.01)
A61B 17/70	(2006.01)
A61F 2/30	(2006.01)
A61B 17/16	(2006.01)

(52) **U.S. Cl.**

CPC ***A61B 17/8605*** (2013.01); ***A61B 17/869*** (2013.01); ***A61F 2/447*** (2013.01); ***A61F 2/4455*** (2013.01); ***A61F 2/4611*** (2013.01); *A61B 17/1671* (2013.01); *A61F 2002/30785* (2013.01); *A61F 2002/30828* (2013.01); *A61F 2002/30904* (2013.01); *A61F 2002/30995* (2013.01)

(56) **References Cited**

U.S. PATENT DOCUMENTS

4,569,338 A 2/1986 Edwards
5,334,205 A 8/1994 Cain
D353,456 S 12/1994 Fayngold et al.
5,534,031 A 7/1996 Matsuzaki et al.
5,722,978 A 3/1998 Jenkins
5,728,116 A 3/1998 Rosenman
5,741,261 A 4/1998 Moskovitz et al.
D397,217 S 8/1998 Brookfield
5,792,044 A 8/1998 Foley et al.
5,902,231 A 5/1999 Foley et al.
5,904,696 A 5/1999 Rosenman
5,954,635 A 9/1999 Foley et al.
6,007,487 A 12/1999 Foley et al.
6,053,916 A 4/2000 Moore
6,080,155 A 6/2000 Michelson
6,193,721 B1 2/2001 Michelson
6,206,822 B1 3/2001 Foley et al.
6,371,988 B1 4/2002 Pafford et al.
6,425,859 B1 7/2002 Foley et al.
6,436,098 B1 * 8/2002 Michelson ..... A61B 17/025 606/86 A
6,440,444 B2 8/2002 Boyce et al.
6,468,309 B1 10/2002 Lieberman
6,488,683 B2 12/2002 Lieberman
6,520,907 B1 2/2003 Foley et al.
6,527,774 B2 3/2003 Lieberman
6,544,265 B2 4/2003 Lieberman
6,551,319 B2 4/2003 Lieberman
6,551,320 B2 4/2003 Lieberman
6,551,322 B1 4/2003 Lieberman
6,635,059 B2 10/2003 Randall et al.
6,648,917 B2 11/2003 Gerbec et al.
6,652,533 B2 11/2003 O'Neil
6,679,833 B2 1/2004 Smith et al.
6,689,168 B2 2/2004 Lieberman
6,695,844 B2 2/2004 Bramlet et al.
6,770,074 B2 8/2004 Michelson
6,846,327 B2 1/2005 Khandkar et al.
6,953,462 B2 10/2005 Lieberman
7,018,416 B2 3/2006 Hanson et al.
7,125,425 B2 10/2006 Foley et al.
7,229,477 B2 6/2007 Biscup
7,416,553 B2 8/2008 Patel et al.
7,575,572 B2 * 8/2009 Sweeney A61B 17/864 604/264
7,601,167 B2 10/2009 Lieberman
7,648,509 B2 1/2010 Stark
7,731,981 B2 6/2010 Trieu et al.
7,744,651 B2 6/2010 Trieu et al.
D620,111 S 7/2010 Courtney et al.
D623,750 S 9/2010 Duffield et al.
D625,805 S 10/2010 Hereford
D627,466 S 11/2010 Courtney et al.
D629,104 S 12/2010 Calverley et al.
7,935,123 B2 5/2011 Fanger et al.
7,955,362 B2 6/2011 Erickson et al.
D642,261 S 7/2011 York et al.
7,993,347 B1 8/2011 Michelson
7,993,378 B2 8/2011 Foley et al.
8,021,392 B2 9/2011 Petersen
8,025,684 B2 9/2011 Garcia-Bengochea
D651,309 S 12/2011 Rowe et al.
D653,756 S 2/2012 Courtney et al.
8,109,934 B2 2/2012 Guenther et al.
8,128,700 B2 3/2012 Delurio et al.
8,157,865 B2 4/2012 Hochschuler et al.
8,162,981 B2 4/2012 Vestgaarden
8,197,513 B2 6/2012 Fisher et al.
8,202,305 B2 6/2012 Reiley
8,221,428 B2 7/2012 Trieu
8,221,503 B2 7/2012 Garcia et al.
8,282,642 B2 10/2012 McClintock et al.
8,308,779 B2 11/2012 Reiley
8,328,815 B2 12/2012 Farr et al.
D673,670 S 1/2013 Linnenschmidt
8,343,189 B2 1/2013 Assell et al.
8,348,950 B2 1/2013 Assell et al.
8,388,667 B2 3/2013 Reiley et al.
8,403,991 B2 3/2013 Ullrich et al.
D685,087 S 6/2013 Voic
8,551,171 B2 10/2013 Johnson et al.
8,579,912 B2 11/2013 Isaza et al.
8,585,741 B2 11/2013 Gabelberger et al.
8,623,053 B2 1/2014 Vestgaarden
8,623,091 B2 1/2014 Suedkamp et al.
D704,334 S 5/2014 Walthall
8,740,912 B2 6/2014 Stark
D708,747 S 7/2014 Curran et al.
8,808,305 B2 8/2014 Kleiner
8,808,377 B2 8/2014 Donner
8,852,241 B2 10/2014 Datta
8,882,818 B1 11/2014 Vestgaarden
8,945,224 B2 2/2015 Trieu
8,961,571 B2 2/2015 Lee et al.
8,979,928 B2 3/2015 Donner
9,017,407 B2 4/2015 Donner
9,039,774 B2 5/2015 Chataigner et al.
9,101,371 B2 8/2015 Assell et al.
9,113,972 B2 8/2015 Trudeau
9,119,732 B2 9/2015 Schifano et al.
9,149,286 B1 10/2015 Greenhalgh et al.
9,186,155 B2 11/2015 Katzman et al.
9,241,798 B2 1/2016 Petersen
9,247,943 B1 2/2016 Kleiner
9,375,243 B1 6/2016 Vestgaarden
9,381,045 B2 7/2016 Donner et al.
9,421,109 B2 8/2016 Donner
9,451,986 B2 9/2016 Stoffman et al.
9,492,284 B2 11/2016 Ginn et al.
9,498,349 B2 11/2016 Patterson et al.
9,662,128 B2 5/2017 Reiley
9,668,781 B2 6/2017 Stark
9,700,356 B2 7/2017 Donner et al.
9,757,154 B2 9/2017 Donner et al.
9,808,346 B2 11/2017 Stark
9,895,176 B2 2/2018 Vestgaarden
D827,133 S 8/2018 Großer et al.
D828,551 S 9/2018 Zou et al.
D832,423 S 10/2018 Ishida
D840,030 S 2/2019 Smith et al.
10,219,841 B1 3/2019 Compton et al.
10,219,912 B2 3/2019 Suh et al.
10,245,087 B2 4/2019 Donner et al.
D847,994 S 5/2019 Asfora et al.
10,357,368 B2 7/2019 Aksu
D857,897 S 8/2019 Loftus
D870,263 S 12/2019 Adams et al.
10,492,802 B2 12/2019 Donner et al.
10,555,818 B2 2/2020 McConnell et al.

(56) **References Cited**

U.S. PATENT DOCUMENTS

10,646,258	B2	5/2020	Donner et al.	
10,660,763	B2	5/2020	Wilson et al.	
10,682,150	B2	6/2020	Stark	
D894,381	S	8/2020	Shaw et al.	
10,849,764	B2	12/2020	Moore et al.	
2002/0022764	A1	2/2002	Smith et al.	
2002/0055737	A1*	5/2002	Lieberman	A61F 2/44 606/247
2003/0139648	A1	7/2003	Foley et al.	
2004/0054414	A1	3/2004	Trieu et al.	
2004/0073216	A1	4/2004	Lieberman	
2004/0133279	A1	7/2004	Krueger et al.	
2004/0193174	A1*	9/2004	Bagby	A61F 2/446 606/99
2004/0215203	A1	10/2004	Michelson	
2004/0228901	A1	11/2004	Trieu et al.	
2005/0011975	A1	1/2005	Baltz	
2005/0015092	A1	1/2005	Rathbun et al.	
2005/0080422	A1	4/2005	Otte et al.	
2005/0119754	A1	6/2005	Trieu et al.	
2005/0159756	A1	7/2005	Ray	
2006/0054171	A1	3/2006	Dall	
2006/0089633	A1	4/2006	Bleich et al.	
2006/0089646	A1	4/2006	Bonutti	
2006/0178673	A1	8/2006	Curran	
2006/0189997	A1	8/2006	Guenther et al.	
2006/0287854	A1	12/2006	Smolenski et al.	
2007/0118224	A1	5/2007	Shah et al.	
2007/0134343	A1	6/2007	Trieu et al.	
2007/0156020	A1	7/2007	Foley et al.	
2007/0270879	A1	11/2007	Isaza et al.	
2008/0009861	A1*	1/2008	Stark	A61B 17/68 606/914
2008/0154275	A1	6/2008	Assell et al.	
2008/0177266	A1	7/2008	Metcalf et al.	
2008/0249569	A1	10/2008	Waugh et al.	
2009/0036927	A1	2/2009	Vestgaarden	
2009/0076551	A1	3/2009	Petersen	
2009/0088604	A1	4/2009	Lowry et al.	
2009/0099610	A1	4/2009	Johnson et al.	
2009/0105832	A1	4/2009	Allain et al.	
2009/0216238	A1	8/2009	Stark	
2009/0312763	A1	12/2009	McCormack et al.	
2010/0030065	A1	2/2010	Farr et al.	
2010/0106194	A1	4/2010	Bonutti et al.	
2010/0106200	A1	4/2010	Stark	
2010/0131011	A1	5/2010	Stark	
2010/0268228	A1	10/2010	Petersen	
2010/0268279	A1	10/2010	Gabelberger et al.	
2010/0312279	A1	12/2010	Gephart et al.	
2011/0009869	A1	1/2011	Marino et al.	
2011/0060375	A1	3/2011	Bonutti	
2011/0098817	A1	4/2011	Eckhardt et al.	
2011/0106261	A1	5/2011	Chin et al.	
2011/0166575	A1	7/2011	Assell et al.	
2011/0172494	A1	7/2011	Bass et al.	
2011/0184518	A1	7/2011	Trieu	
2011/0184519	A1	7/2011	Trieu	
2011/0230966	A1	9/2011	Trieu	
2011/0238181	A1	9/2011	Trieu	
2011/0264229	A1	10/2011	Donner	
2012/0022535	A1	1/2012	Mayer et al.	
2012/0071978	A1	3/2012	Suedkamp et al.	
2012/0078371	A1	3/2012	Gamache et al.	
2012/0083883	A1	4/2012	Ginn	
2012/0095560	A1	4/2012	Donner	
2012/0116454	A1	5/2012	Edidin et al.	
2012/0143334	A1	6/2012	Boyce et al.	
2012/0191191	A1	7/2012	Trieu	
2012/0253398	A1	10/2012	Metcalf et al.	
2012/0271351	A1	10/2012	Vestgaarden	
2012/0277801	A1	11/2012	Marik et al.	
2012/0296428	A1	11/2012	Donner	
2013/0006368	A1*	1/2013	Walsh	A61F 2/30756 623/18.11
2013/0018427	A1	1/2013	Pham et al.	
2013/0035723	A1	2/2013	Donner	
2013/0144343	A1	6/2013	Arnett et al.	
2013/0172736	A1*	7/2013	Abdou	A61B 17/70 600/425
2013/0211453	A1	8/2013	Lenke et al.	
2013/0238093	A1	9/2013	Mauldin et al.	
2014/0031935	A1	1/2014	Donner et al.	
2014/0081279	A1	3/2014	Kleiner et al.	
2014/0088707	A1	3/2014	Donner et al.	
2014/0088711	A1	3/2014	Kingsley et al.	
2014/0094918	A1	4/2014	Vishnubholta et al.	
2014/0100662	A1	4/2014	Patterson et al.	
2014/0114423	A1	4/2014	Suedkamp et al.	
2014/0135927	A1*	5/2014	Pavlov	A61F 2/4455 623/17.11
2014/0142700	A1	5/2014	Donner et al.	
2014/0200618	A1	7/2014	Donner et al.	
2014/0257408	A1	9/2014	Trieu et al.	
2014/0277165	A1	9/2014	Katzman et al.	
2014/0277204	A1	9/2014	Sandhu	
2014/0336763	A1	11/2014	Donner et al.	
2015/0012097	A1	1/2015	Ibarra et al.	
2015/0057754	A1	2/2015	Reed et al.	
2015/0073552	A1	3/2015	To et al.	
2015/0088200	A1	3/2015	Lins	
2015/0150683	A1	6/2015	Donner et al.	
2015/0173805	A1	6/2015	Donner et al.	
2015/0209087	A1	7/2015	Donner	
2015/0230937	A1	8/2015	Voellmicke	
2015/0328012	A1	11/2015	Hansell et al.	
2016/0030191	A1	2/2016	McLuen et al.	
2016/0175113	A1	6/2016	Lins	
2016/0310197	A1	10/2016	Black et al.	
2017/0209155	A1	7/2017	Petersen	
2018/0303624	A1	10/2018	Shoshtaev	
2019/0083271	A1	3/2019	Donner et al.	
2019/0209011	A1*	7/2019	Donner	A61B 17/7055
2019/0343640	A1*	11/2019	Donner	A61B 17/1626

FOREIGN PATENT DOCUMENTS

CN	110123436	8/2019
EP	0374088	10/1989
EP	0663184	1/1995
EP	1290985	9/2008
EP	1328216	2/2009
EP	2877128	7/2013
FR	2727004	11/1994
WO	2006074422	7/2006
WO	2011087912	7/2011
WO	2011091349	7/2011
WO	2012174485	12/2012
WO	2013043584	3/2013
WO	2014146018	9/2014
WO	2017066443	4/2017
WO	2018195406	10/2018
WO	2019137626	7/2019

OTHER PUBLICATIONS

Medtronic Inc., Description of Infuse bone Graft/LT-Cage Lumbar Tapered Fusion Device accessed on Mar. 18, 2013 from "www.medtronic.com/for-healthcare-professionals/products-therapies/spinal/bone-graft-options/infuse-bone-graft/index.htm".

Medtronic Sofamor Danek USA, Inc., Brochure for METRx® System Surgical Technique, 2004, available at "www.mtortho.com/public/metrxmicrost.pdf".

Minsurg Corporation, Description of TruFUSE® Procedure, accessed on Mar. 18, 2013 "www.minsurg.com".

Orthopedic Designs North America, Inc., Description of Talon® DistalFix® Femoral Nail System accessed on Mar. 18, 2013 from "www.odi-na.com".

Osteotech,Inc., Description of Xpanse® R Bone Insert, accessed on Mar. 18, 2013 from "www.osteotech.com".

(56) **References Cited**

OTHER PUBLICATIONS

Si-Bone, Inc., Brochure for iFuse Implant System®, accessed on Mar. 18, 2013 from "http://si-bone.com/health_care_professionals/".
Signus Medizintechnik GmbH, Description of the DIANA system, access on Mar. 18, 2013 from "www.si-joint.net".
Medtronic Sofamor Danek, Inc., 510(k) premarket notification of intent to market MSB Sacroiliac Joint Fusion Device and response letter from the Department of Health and Human service, accessed Mar. 18, 2013 from "http://sijpain.com/wp-content/uploads/K110472.pdf".
Tedan Surgical Innovations, Description of Phantom TL Transverse Retractor Frame with locking conical connection,accessed on Mar. 18, 2013 from "www.tedansurgical.com".
VG Innovations, LLC, Descrption of the SiJoin™ sacroiliac implant, accessed on Mar. 18, 2013 from "www.vginnovations.com".
ZYGA Technology, Inc., Description of the Slmmetry® sacroiliac joint fusion system, accessed on Mar. 18, 2013 from "www.zygatech.com".
Donner E.J. Sacroiliac joint fusion system, U.S. Appl. No. 61/335,947, filed Jan. 13, 2010.
LDR Holding Corporation, Description of the cage surgical implants, access on Mar. 27, 2015 from "http://www.ldr.com/products".
Alphatec Spine, Inc., Description of Alphatec Solus® Anterior Lumbar Interbody Fusion, accessed on Mar. 27, 2015 from "http://www.alphatecspine.com/products/thoracolumbar/solus.asp".
Muller et al., Bone screw, English Abstract of European Patent Publication of EP0374088, Jun. 20, 1990, European Patent Organization, accessed from "http://www.epo.org/searching/free/espacenet.html."
Rosenman, D., Spiral surgical tack, English Abstract of European Patent Publication EP0663184, Jul. 19, 1995 European Patent Organization, access from "http://www.epo.org/searching/free/espacenet.html".
LDR Holding Corporation, Description of the ALIF cage surgical impants, available on Mar. 27, 2015 from "http://us.ldr.com/portals/1/PDF/Products/ROI-A/Patientedmedianobliqueiraopf1reva09.pdf".
LDR holding corporation,Description of the Lateral Lumber cage surgical implants, accessed on Mar. 27, 2015 "http://us.ldr.com/portals/1/PDF/Products/AvenueLPatientEducationAVEPF1REVA082012.pdf".
LDR holding corporation,Description of the Cervical Cage surgical implants, accessed on Mar. 27, 2015 from "http://us.ldr.com/portals/1/PDF/Products/ROI-C/IR-CPF2REVA04.2012.pdf".
USPTO Non-patent literature Database Search 1, U.S. Appl. No. 13/842,227, dated Mar. 30, 2015.
USPTO Non-patent literature Database Search 2, U.S. Appl. No. 13/842,227, dated Mar. 30, 2015.
Google machine English translation of CN110123436 accessed on May 17, 2021 from https://patents.google.com/patent/CN110123436A/en?oq=CN110123436.
Google machine English translation of FR2727004 accessed on May 17, 2021 from https://patents.google.com/patent/FR2727004A1/en?oq=FR2727004.

* cited by examiner

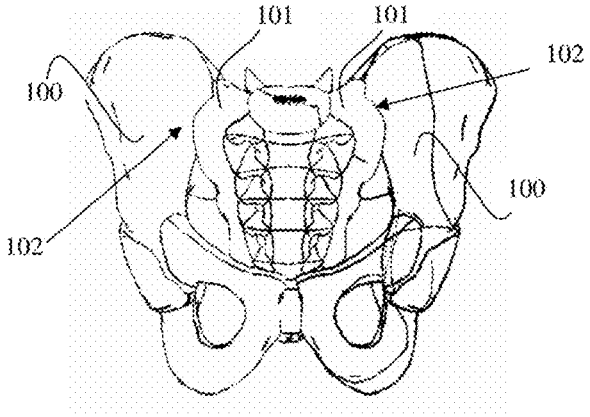

FIG. 1

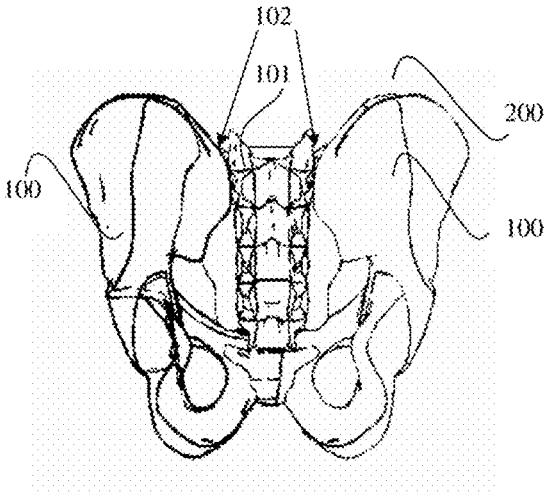

FIG. 2

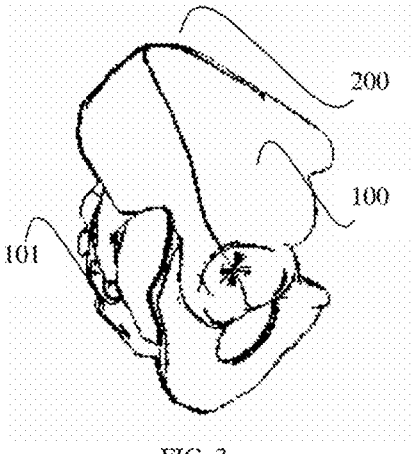

FIG. 3

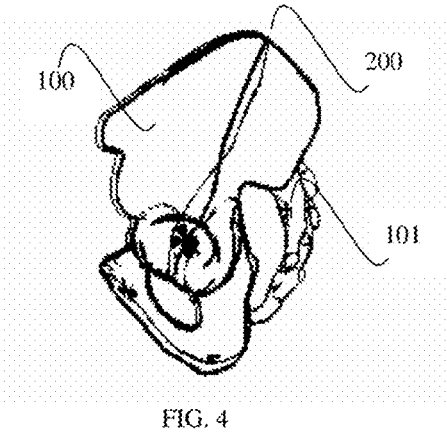

FIG. 4

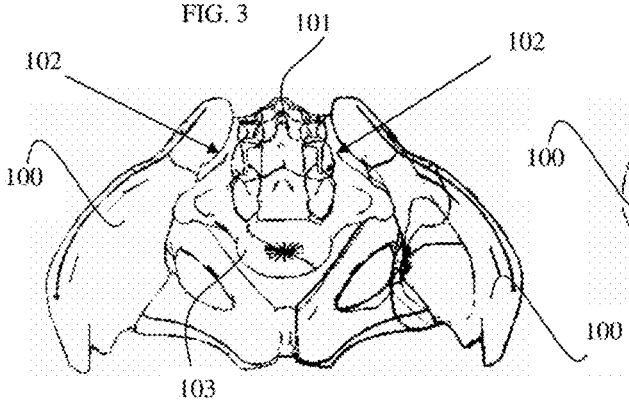

FIG. 5

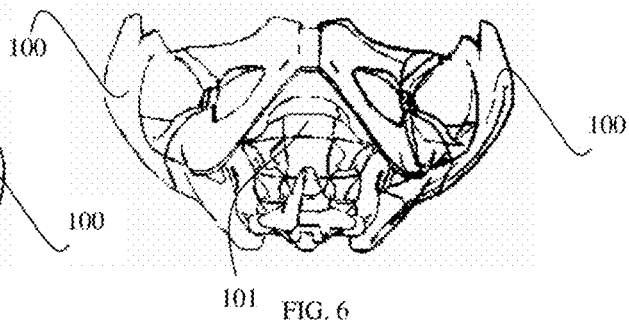

FIG. 6

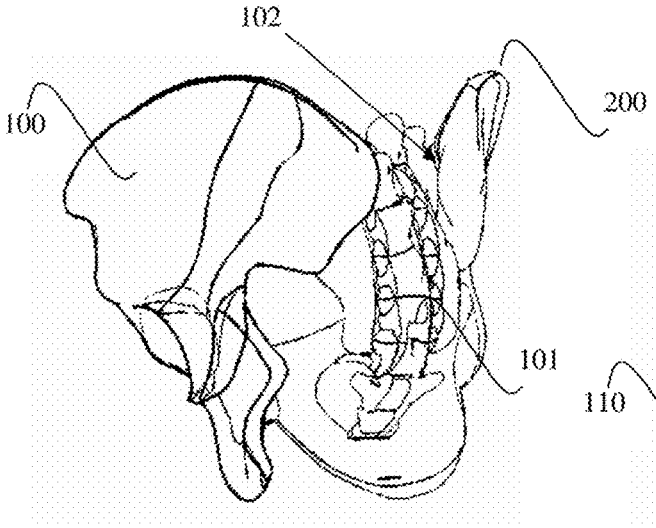

FIG. 7

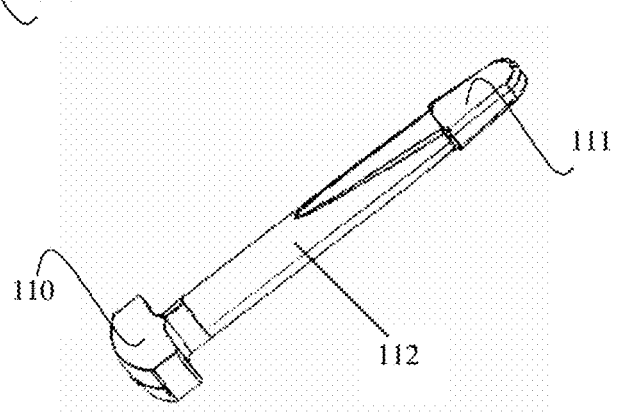

FIG.8

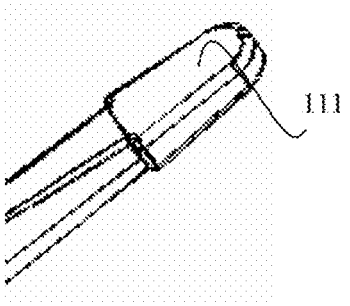

FIG. 9

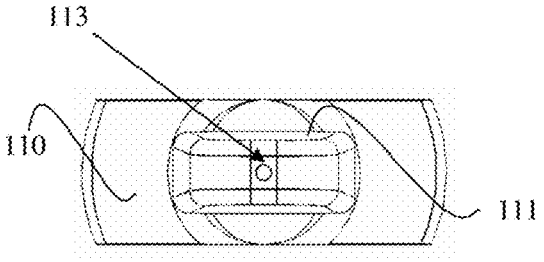

FIG. 10

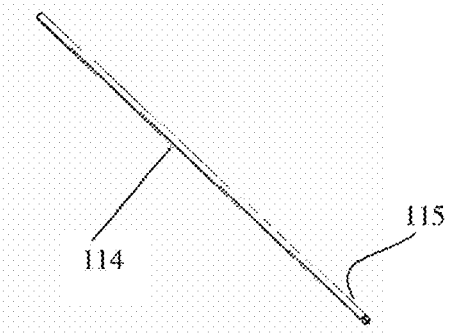

FIG. 11

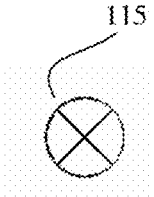

FIG. 12

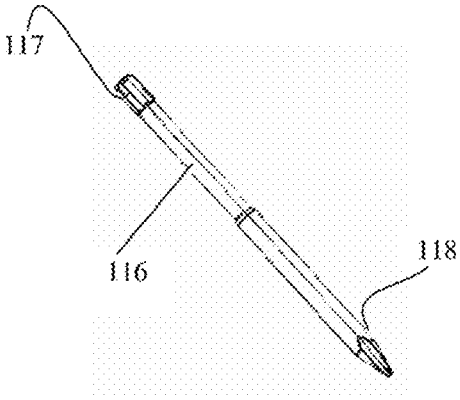

FIG. 13

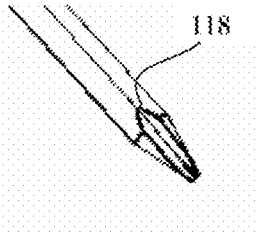

FIG. 14

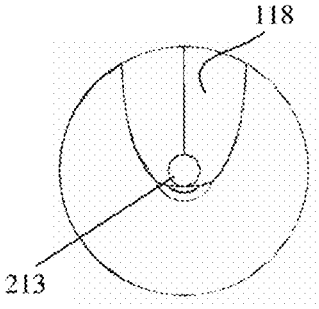

FIG. 15

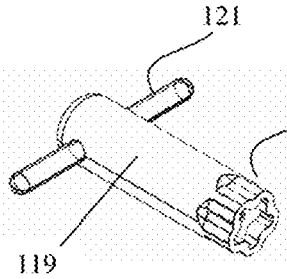

FIG.16

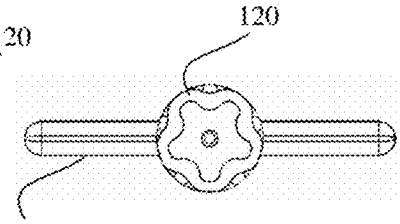

FIG. 17

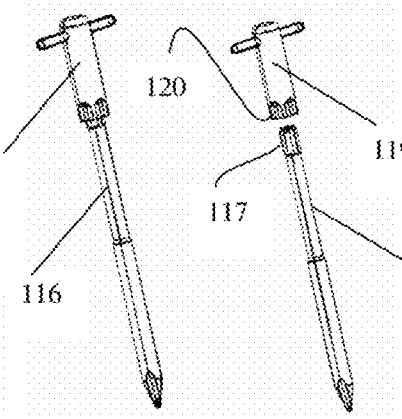

FIG. 18

FIG. 19

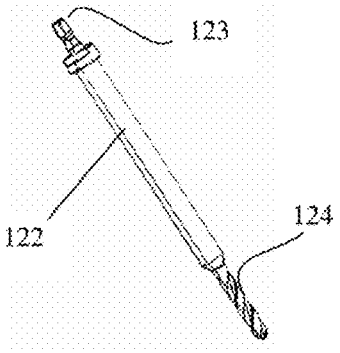

FIG. 20

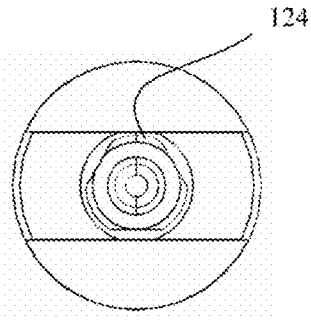

FIG. 21

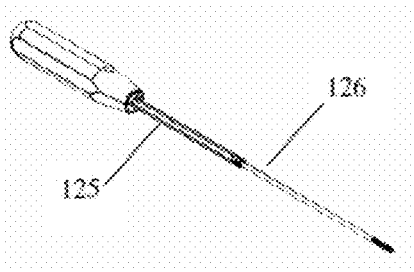

FIG. 22

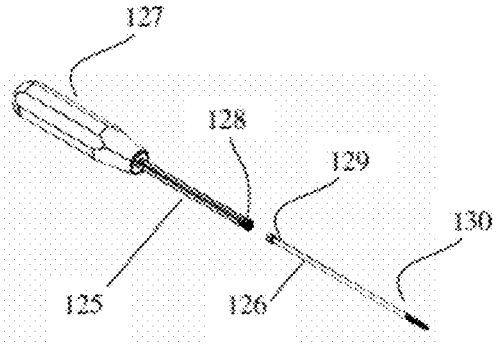

FIG. 23

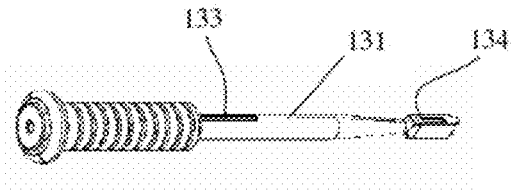

FIG. 24

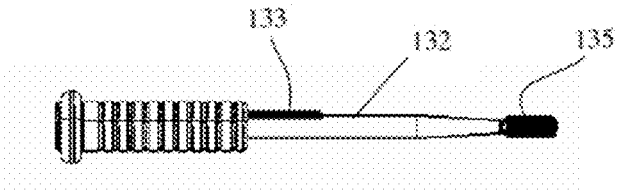

FIG. 25

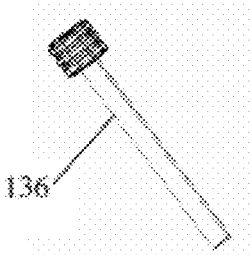

FIG. 26

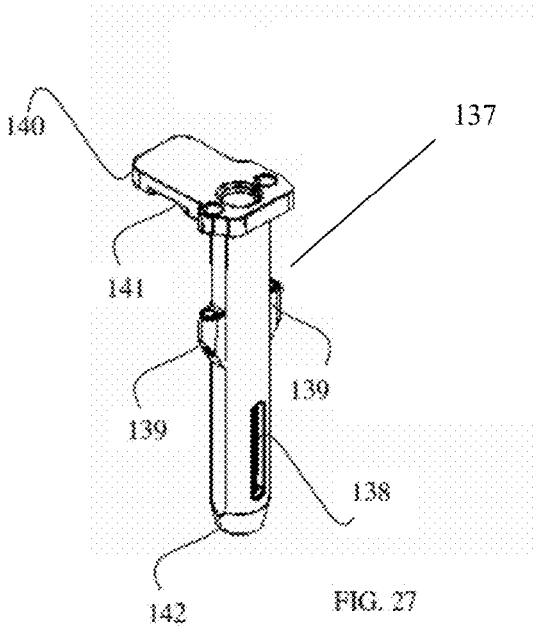

FIG. 27

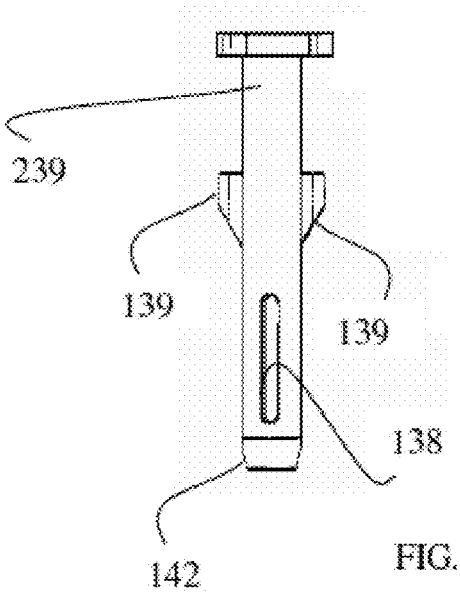

FIG. 28

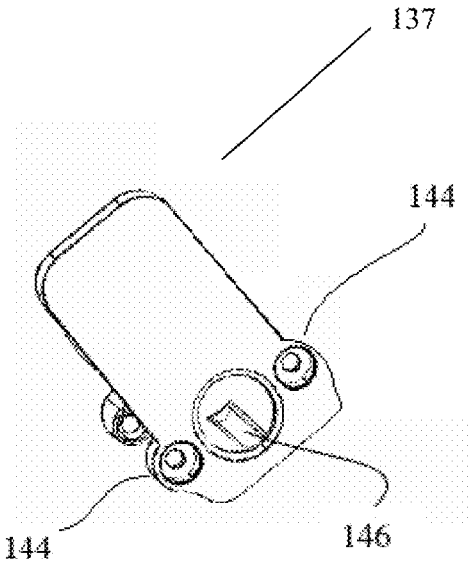

FIG. 29

FIG. 30

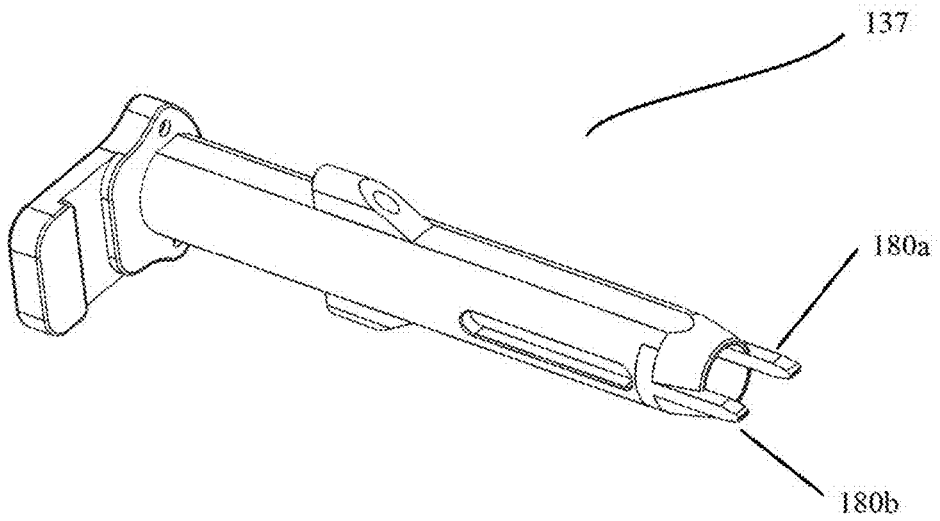

FIG. 31

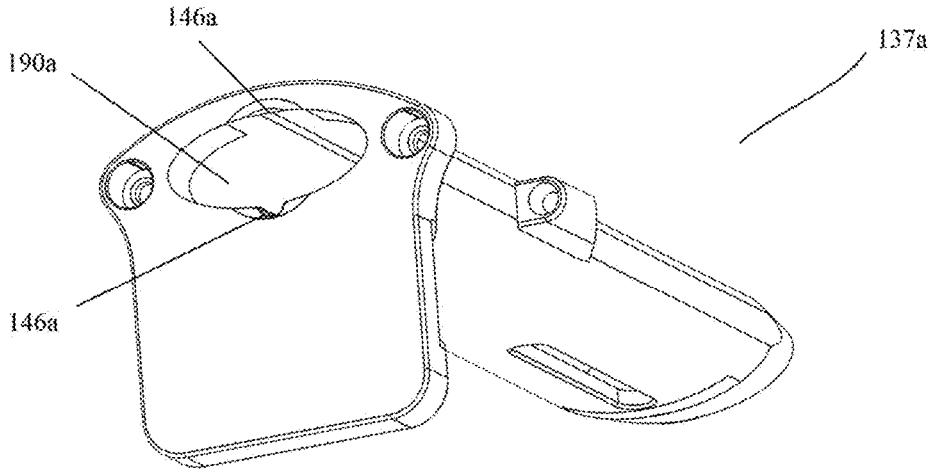

FIG. 32A

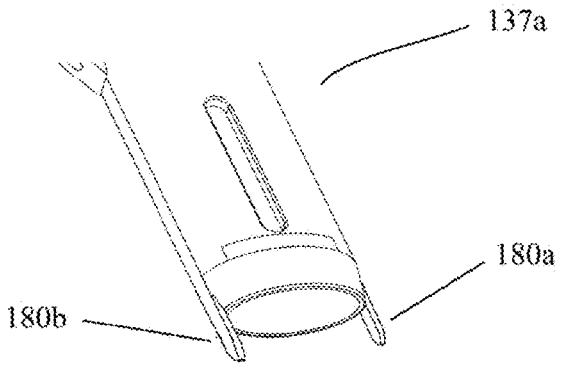

FIG. 32B

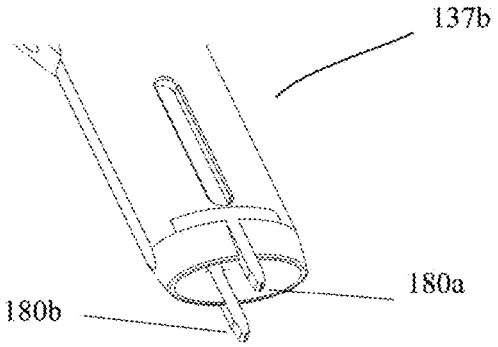

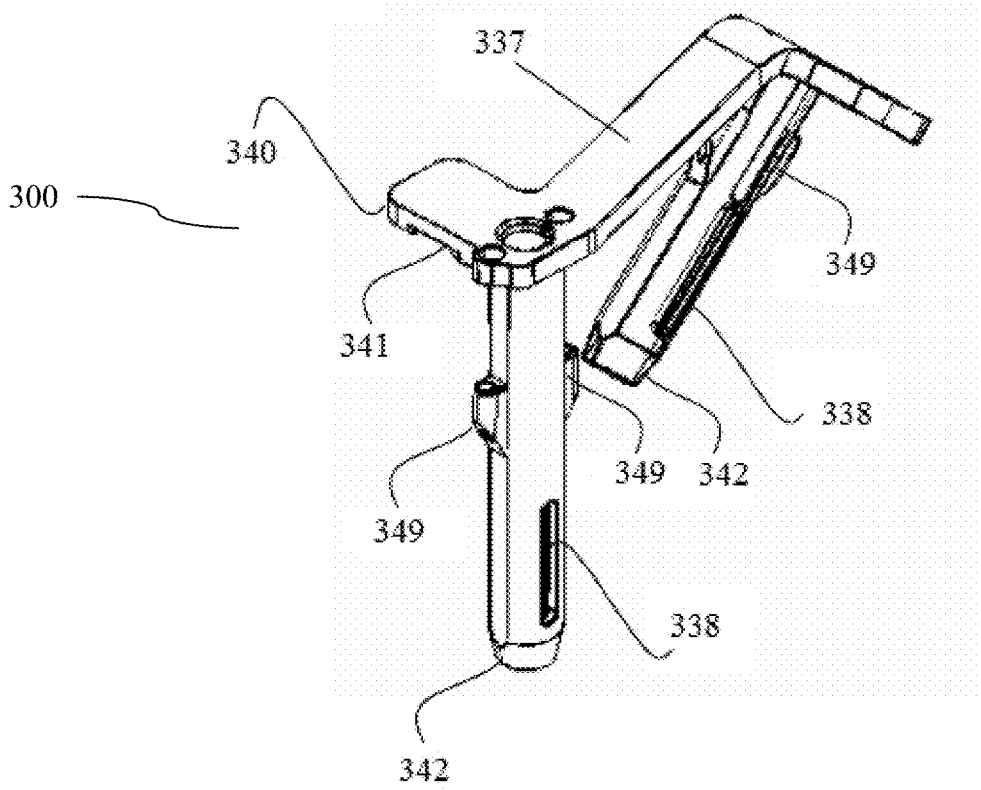
337
340
300
349
341
338
349
342
349
338
342

FIG. 33

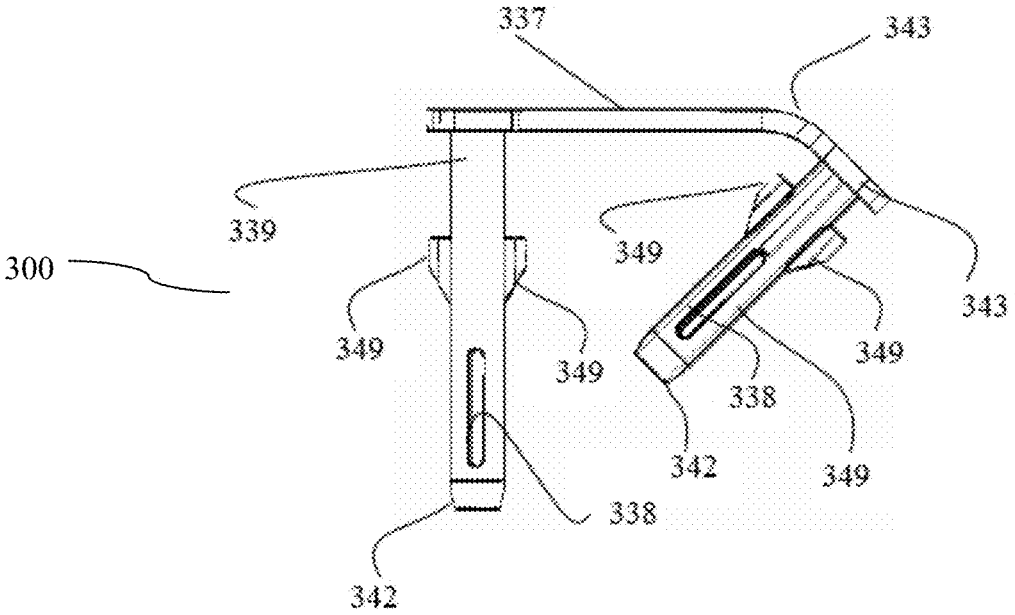
337
343
339
349
300
343
349
349
349
338
342
349
338
342

FIG. 34

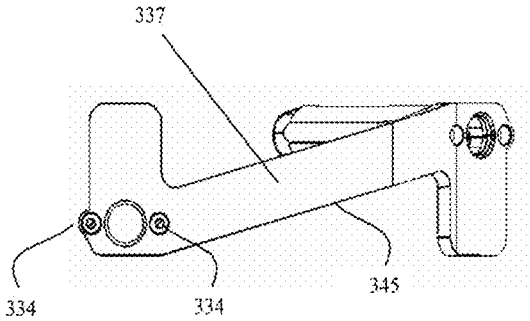

FIG. 35

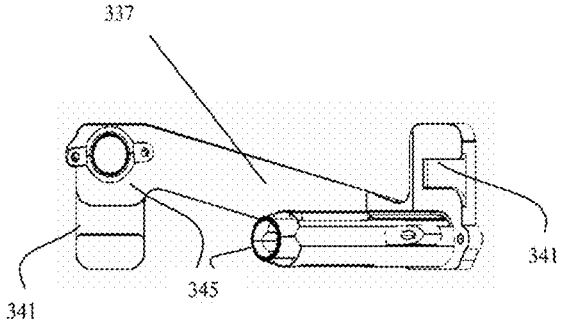

FIG. 36

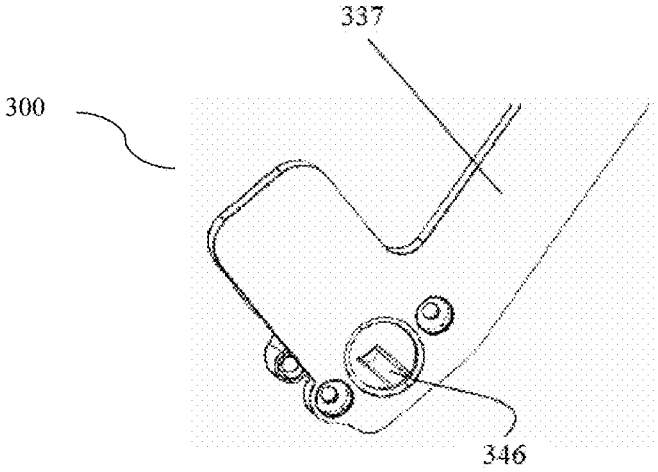

FIG. 37

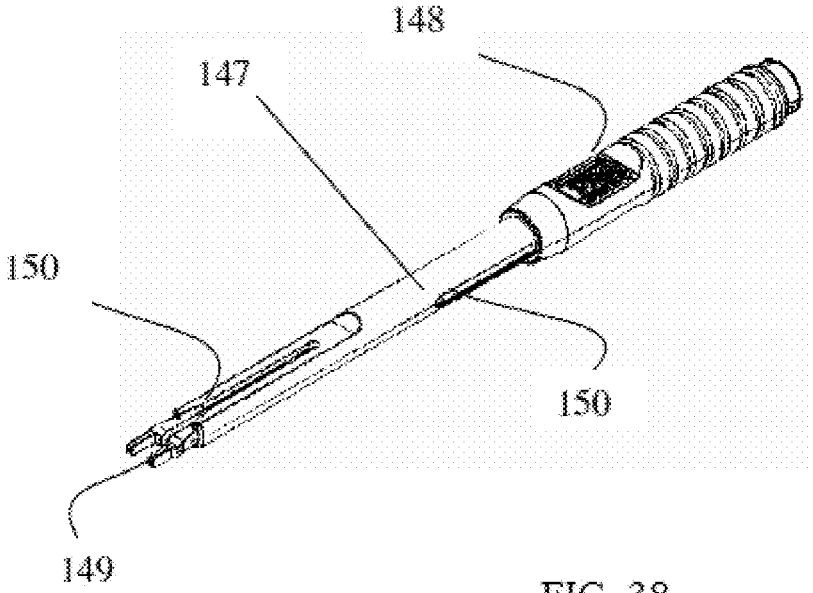

FIG. 38

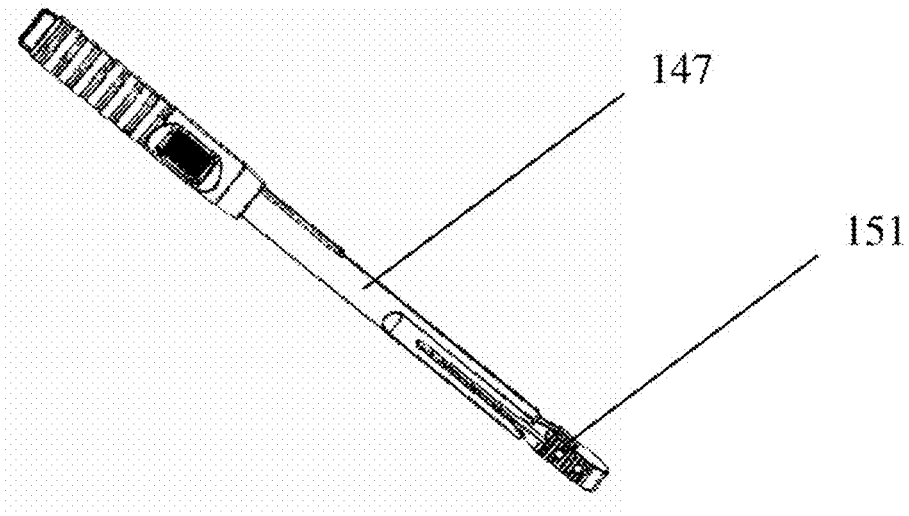

FIG. 39

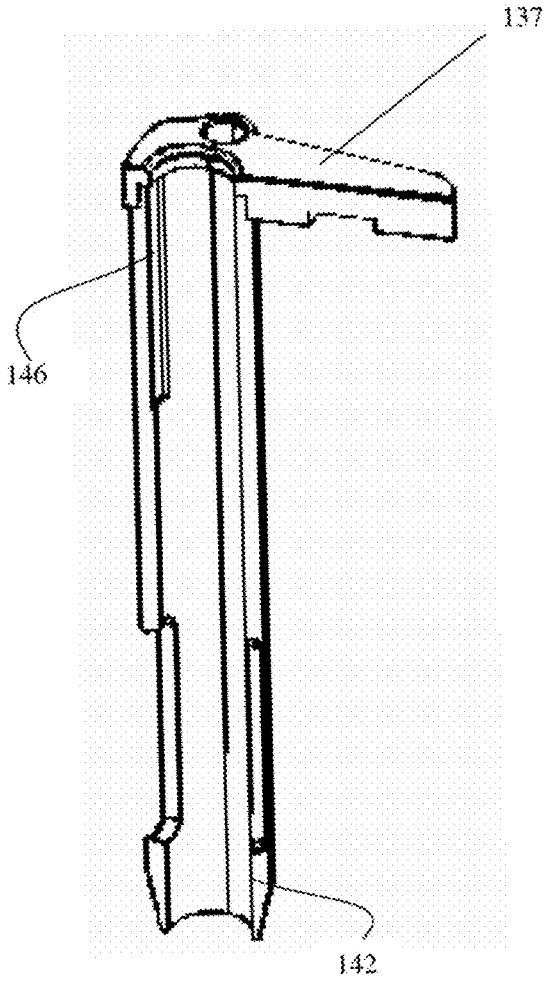

FIG. 40

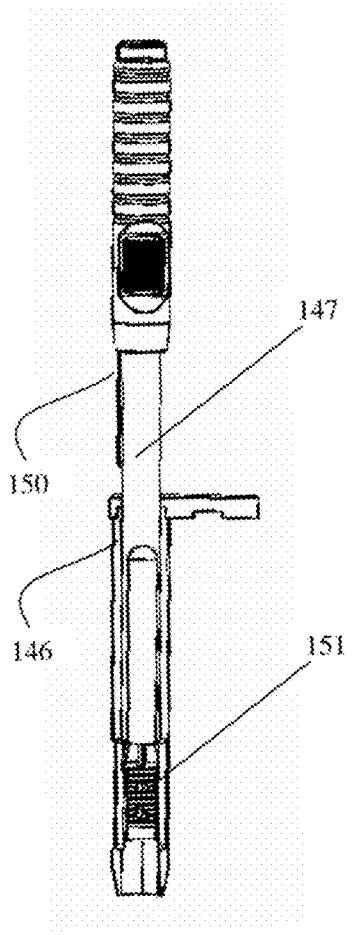

FIG. 41

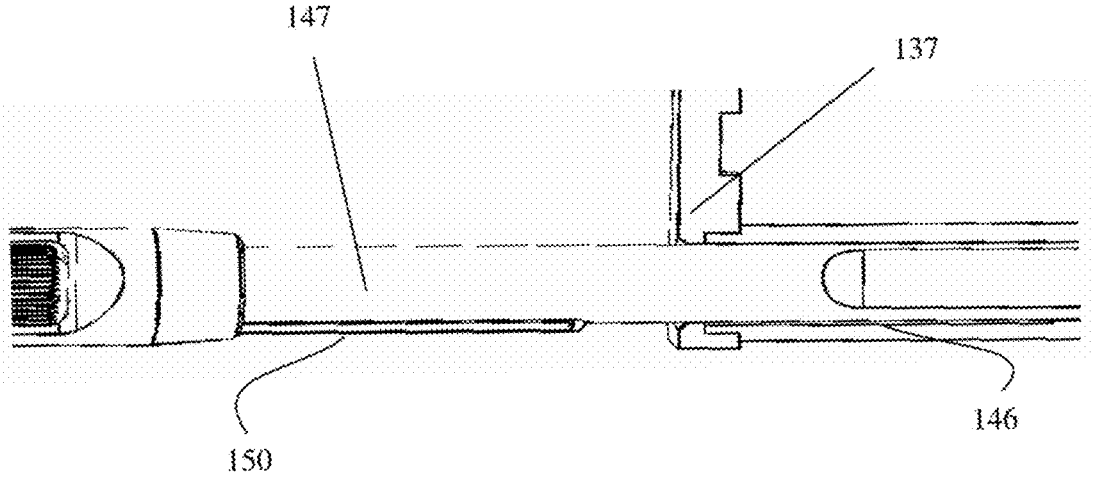

FIG. 42

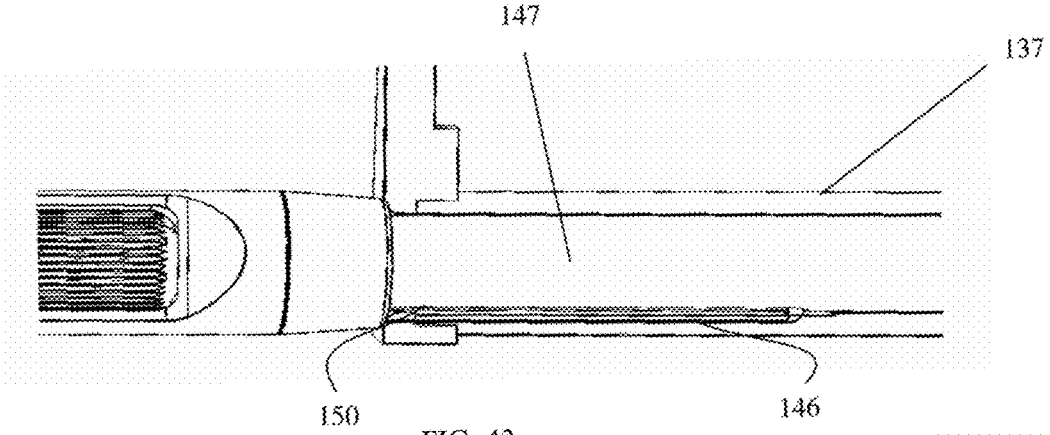

FIG. 43

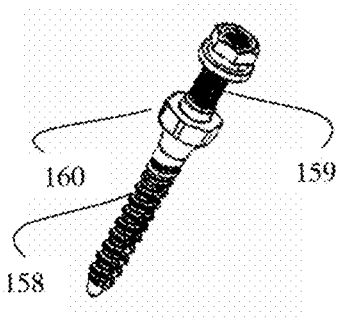

FIG. 44

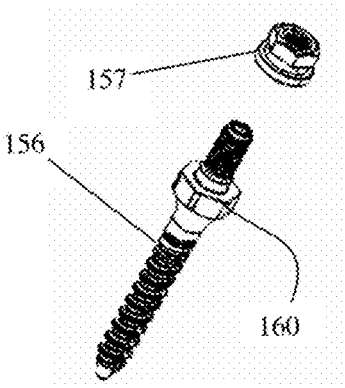

FIG. 45

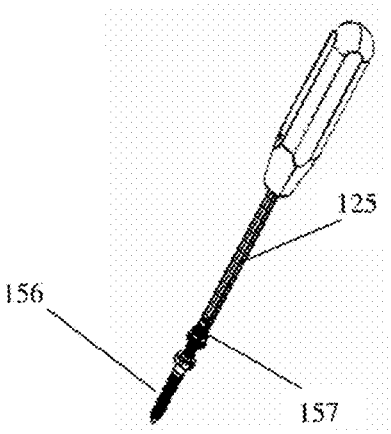

FIG. 46

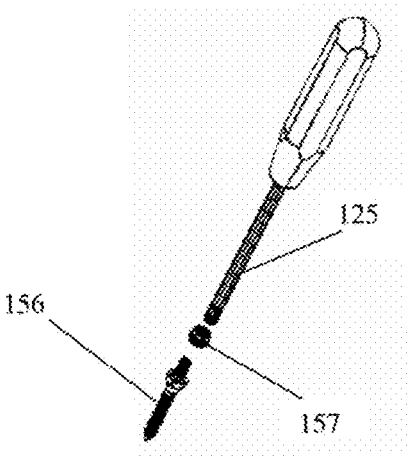

FIG. 47

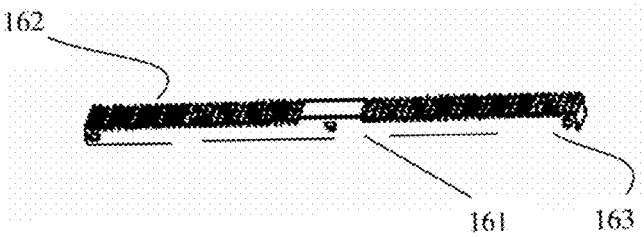

FIG. 48

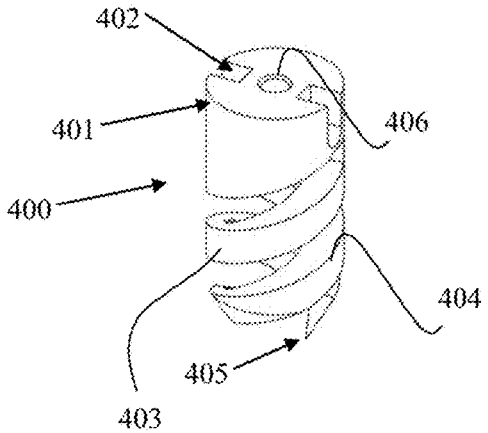

FIG. 49

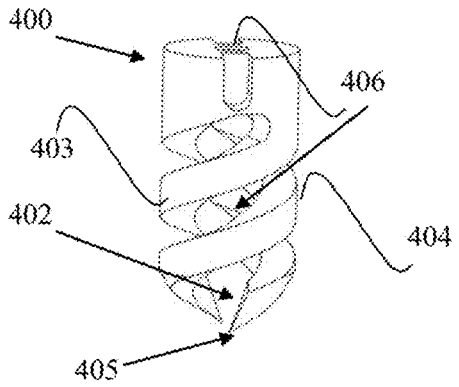

FIG. 50

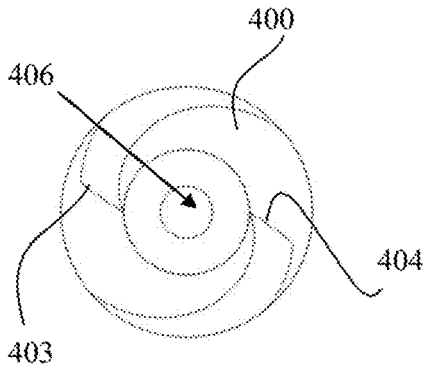

FIG. 51

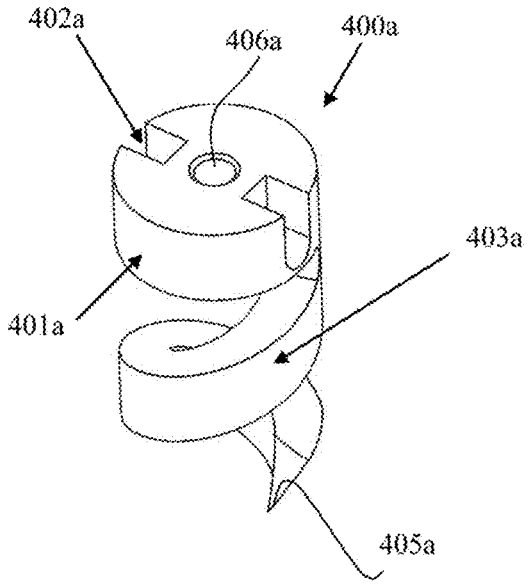

FIG. 52

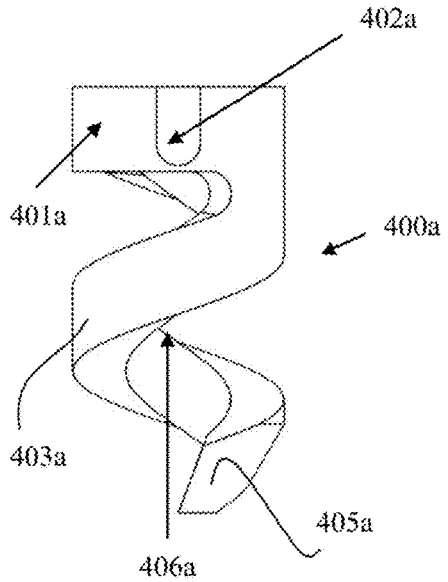

FIG. 53

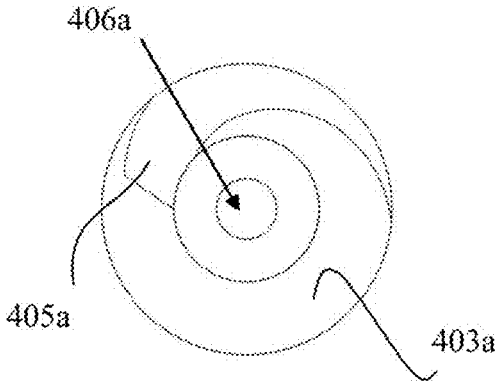

FIG. 54

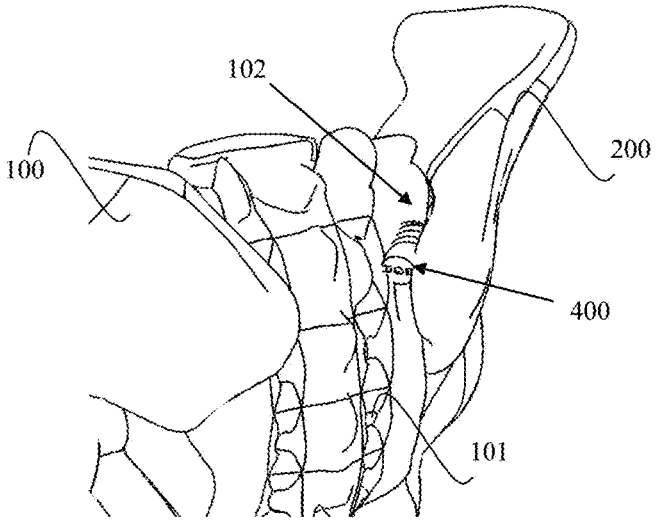

FIG. 55

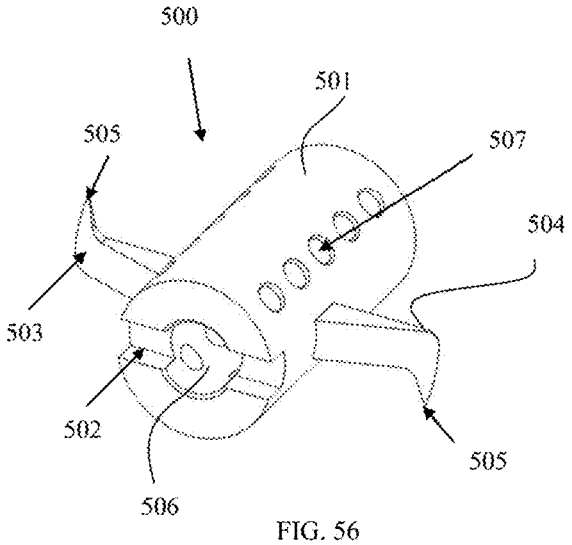

FIG. 56

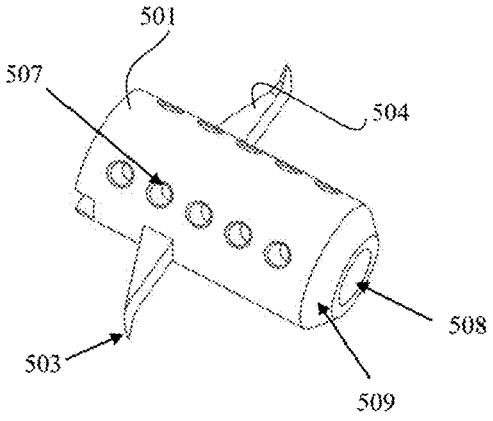

FIG. 57

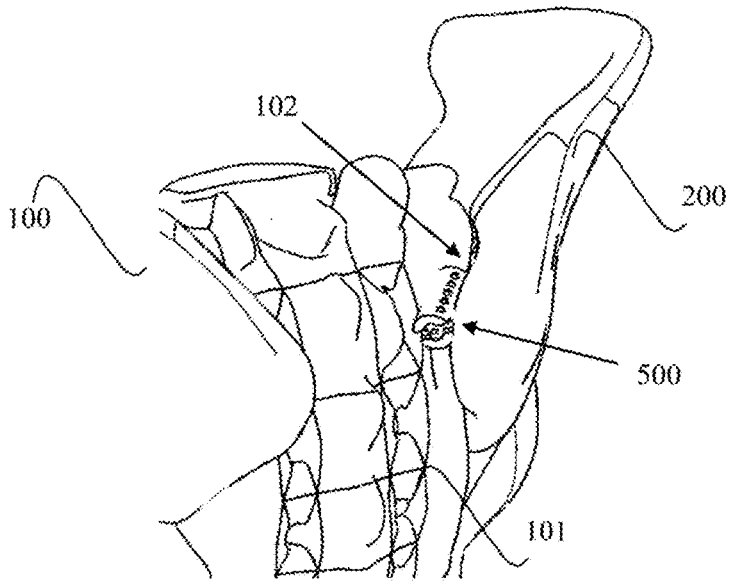

FIG. 58

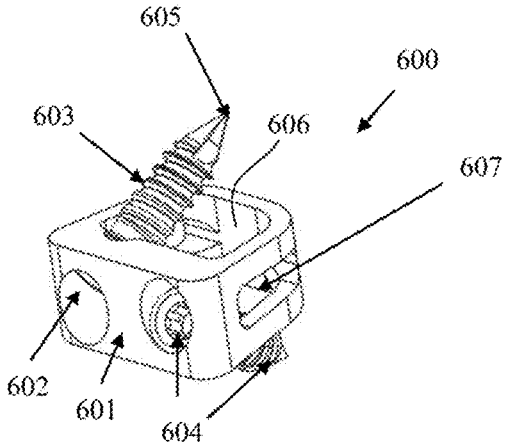

FIG. 59

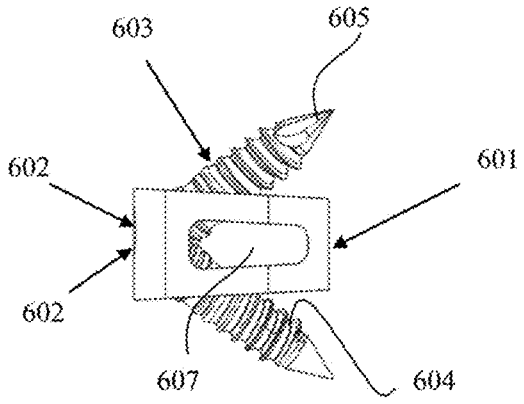

FIG. 60

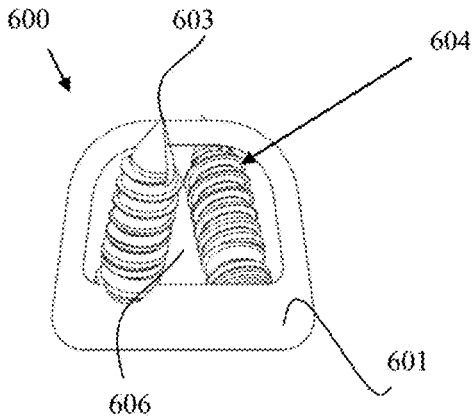

FIG. 61

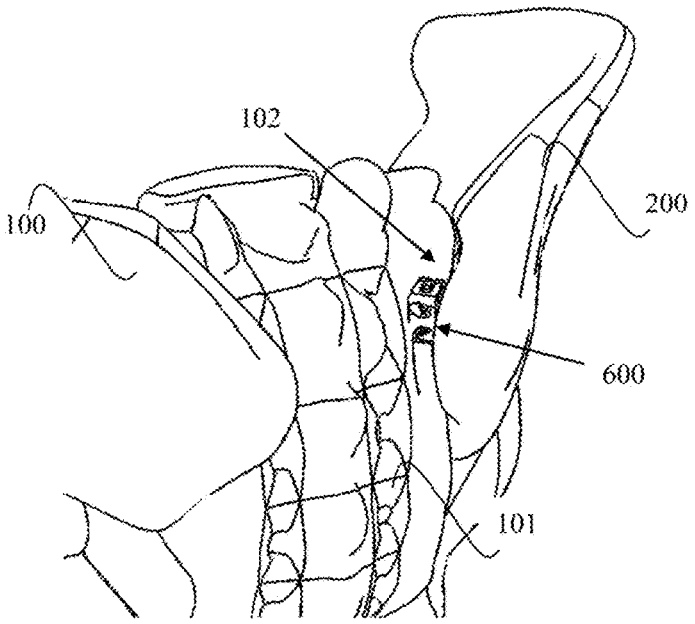

FIG. 62

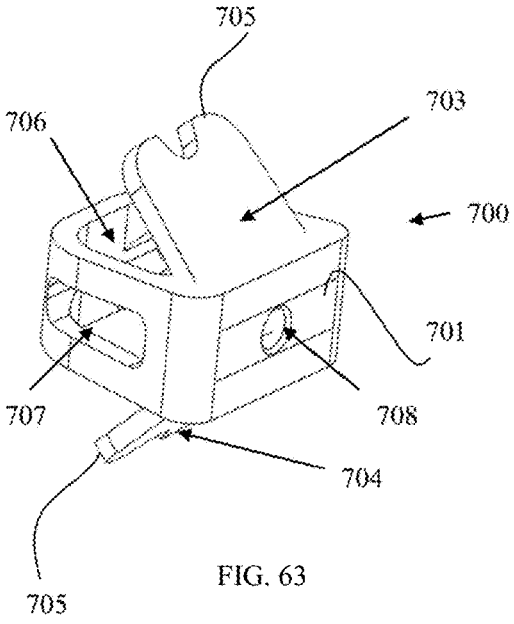

FIG. 63

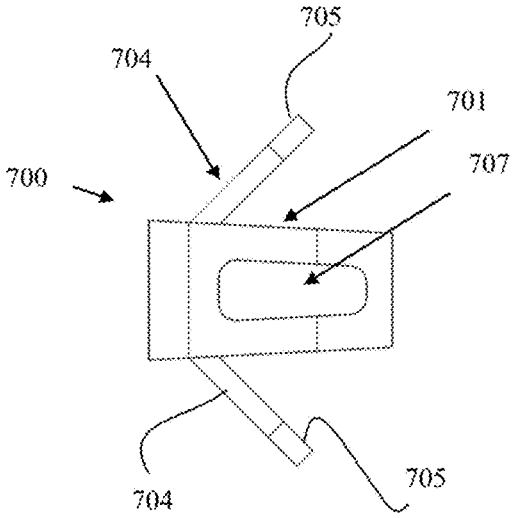

FIG. 64

FIG. 65

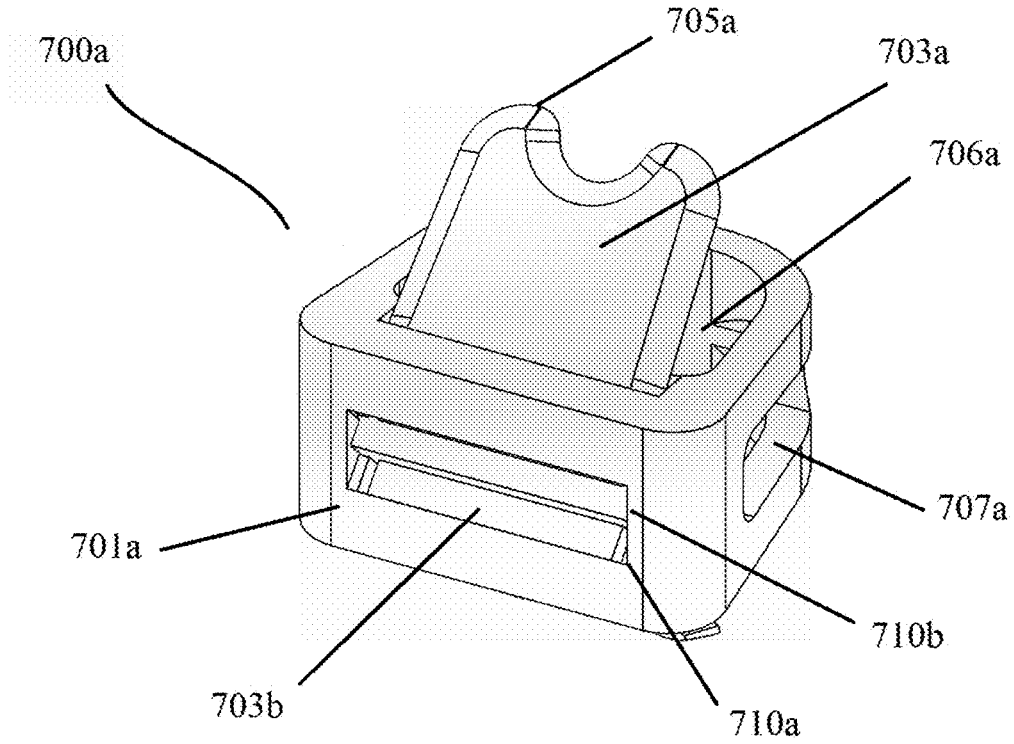

FIG. 66

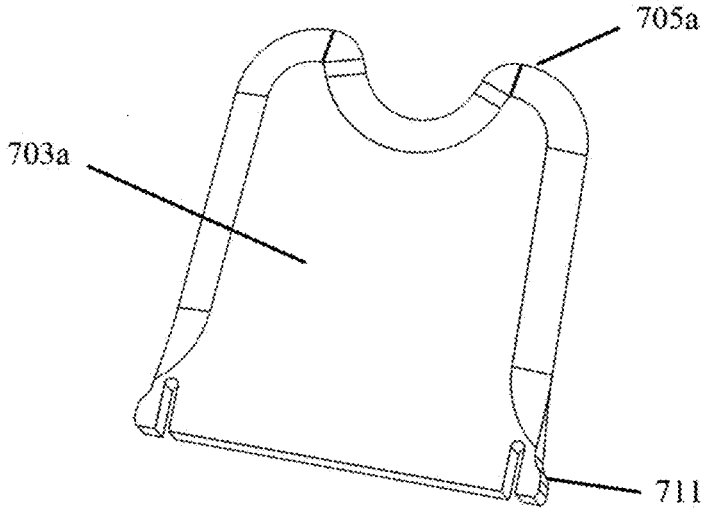

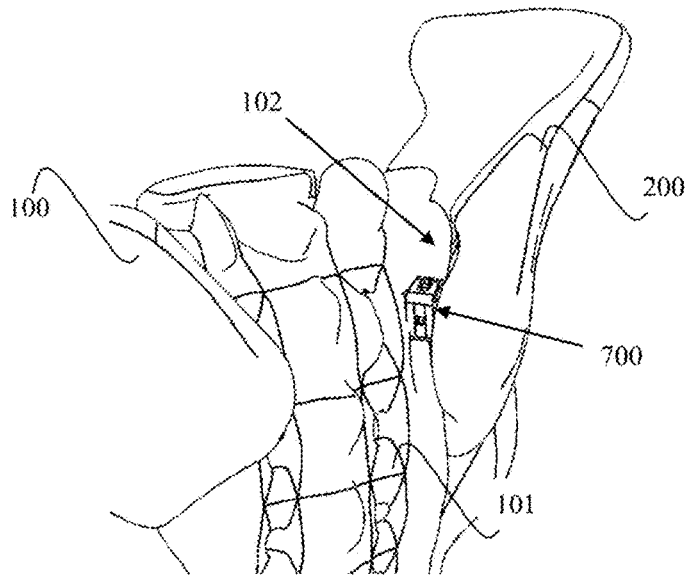

FIG. 67

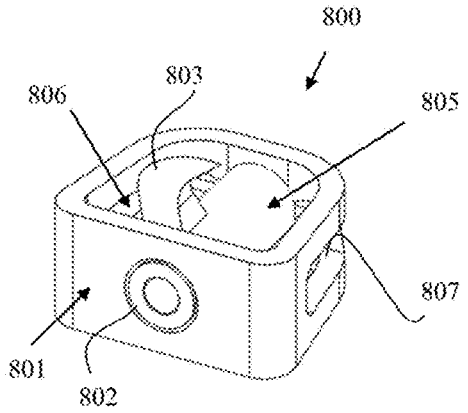

FIG. 68

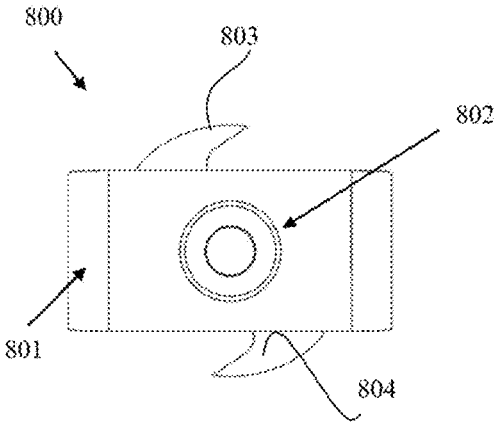

FIG. 69

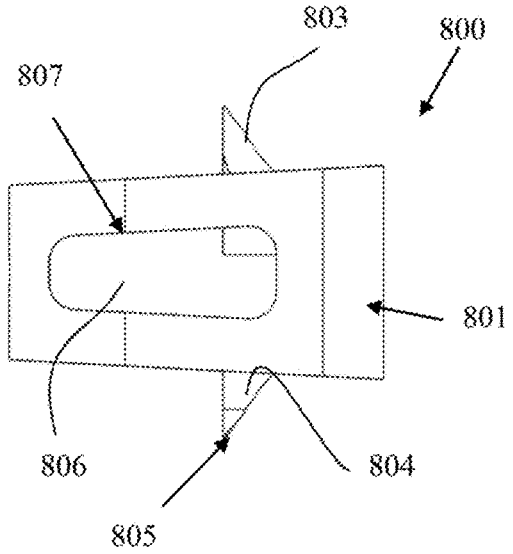

FIG. 70

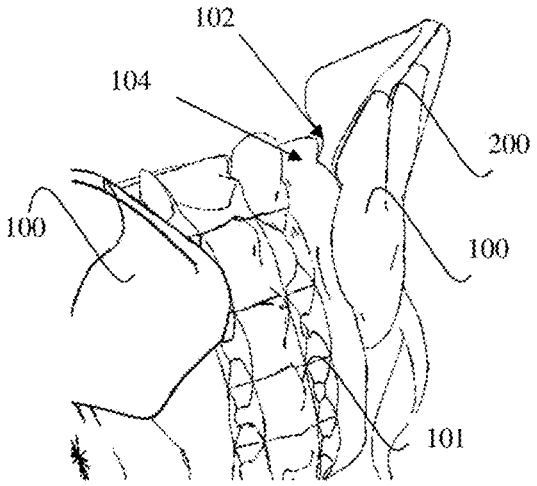

FIG. 71

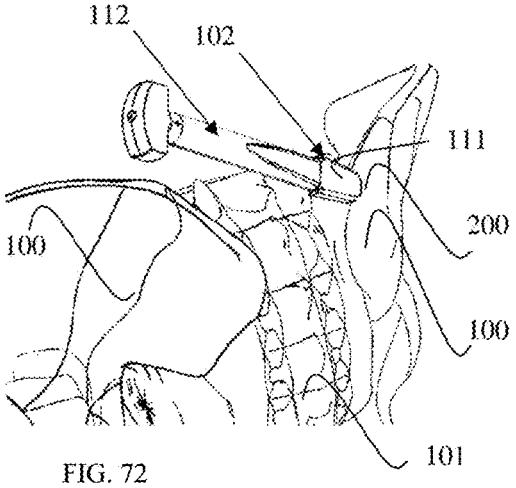

FIG. 72

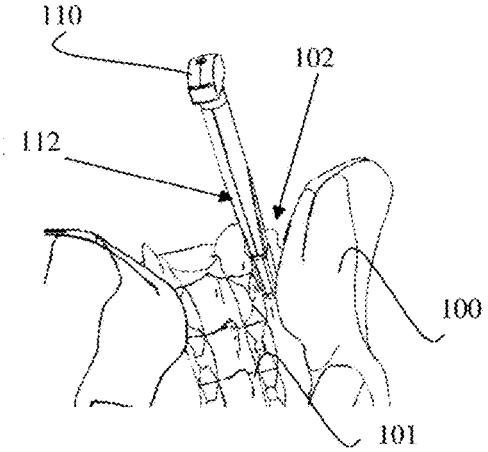

FIG. 73

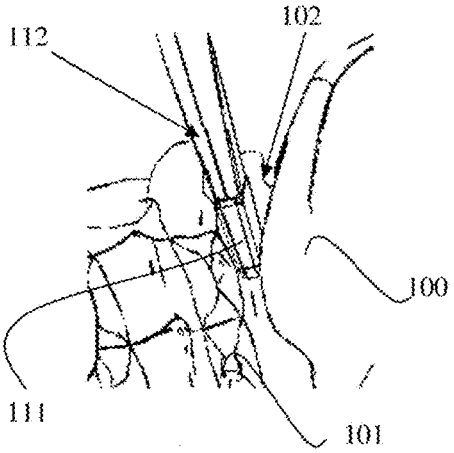

FIG. 74

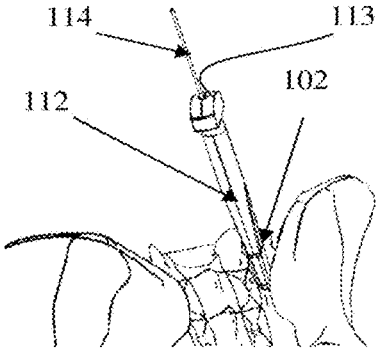

FIG. 75

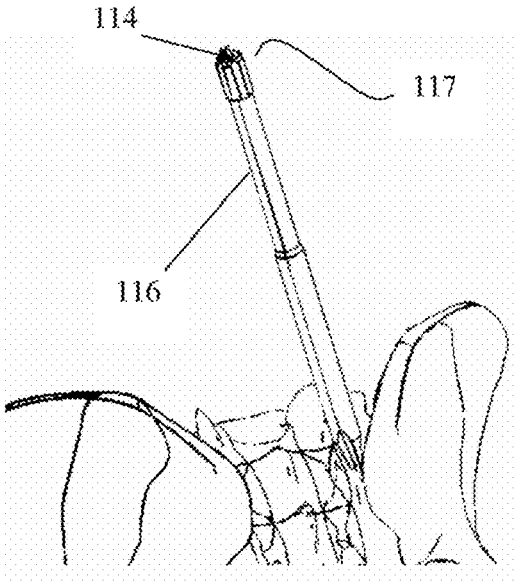

FIG. 76

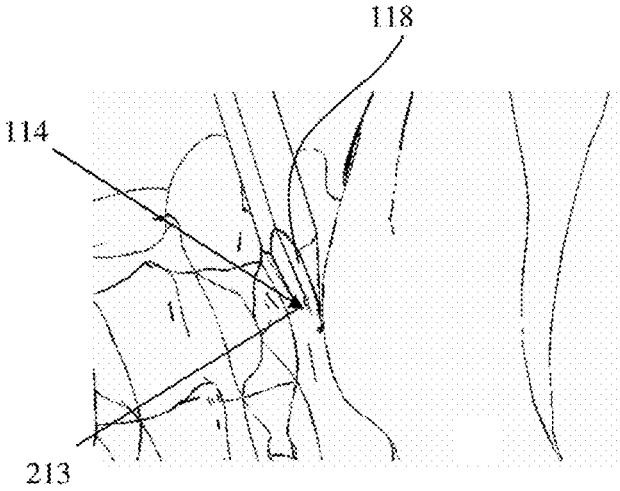

FIG. 77

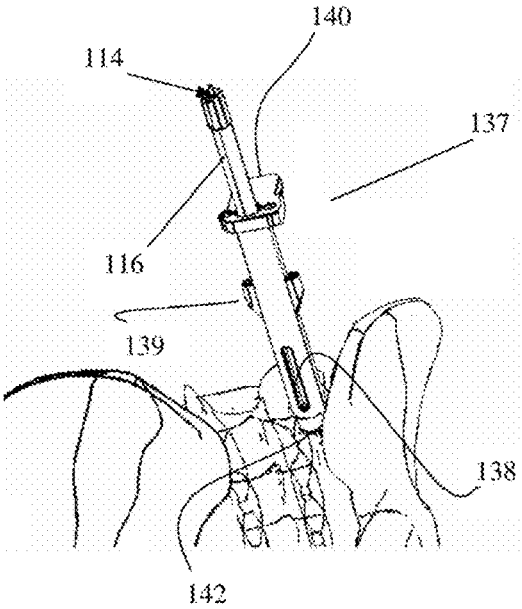

FIG. 78

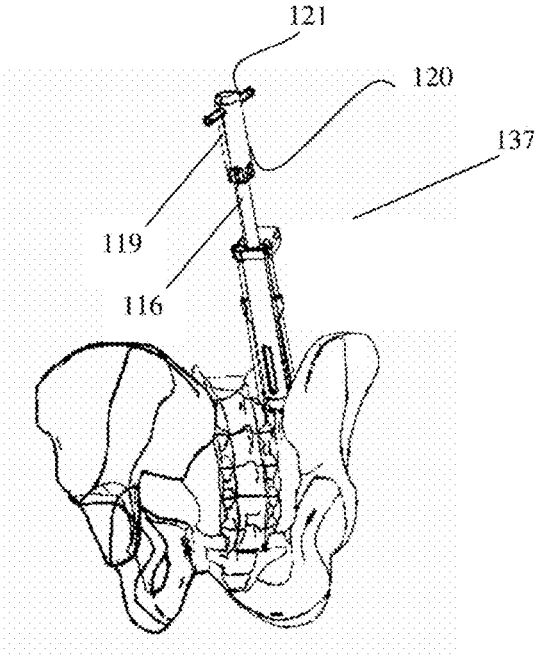

FIG. 79

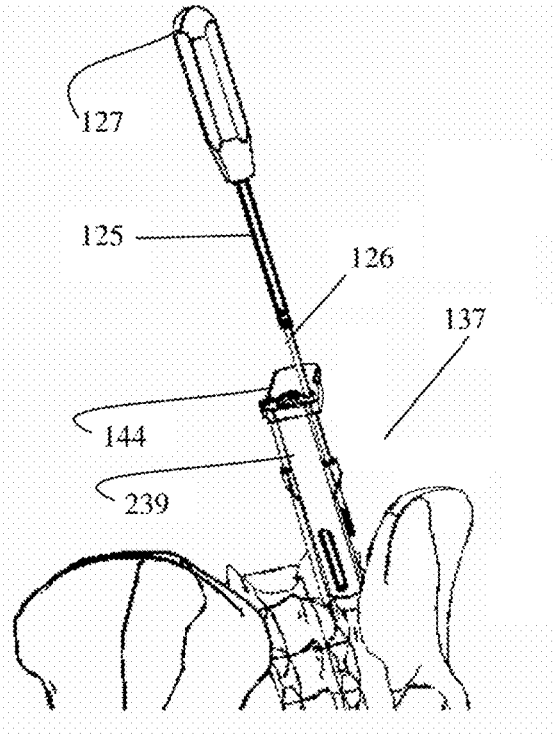

FIG. 80

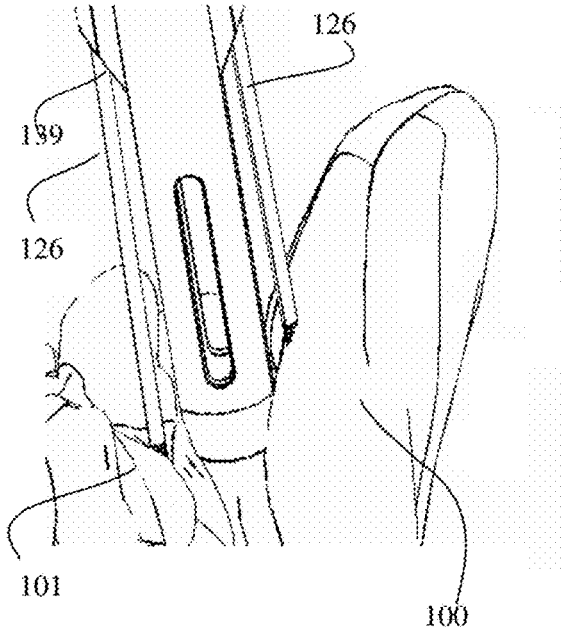

FIG. 81

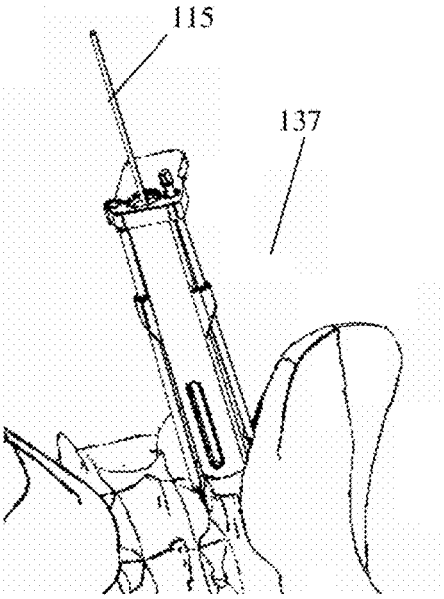

FIG. 82

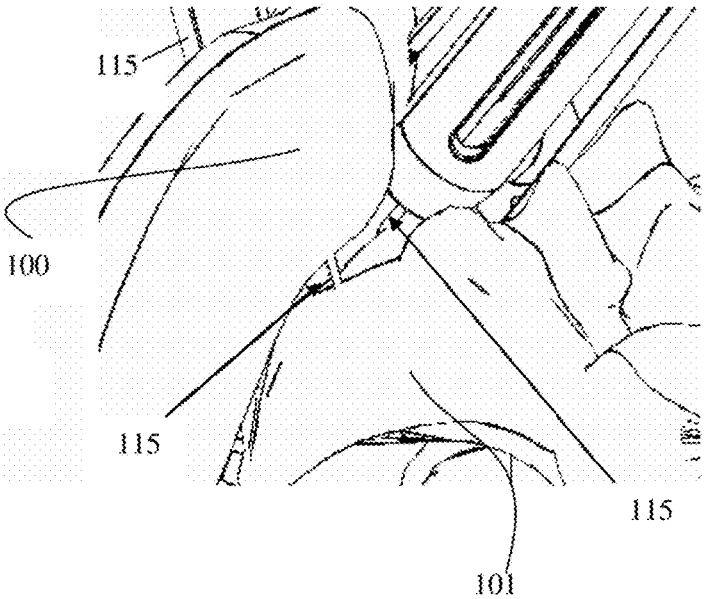

FIG. 83

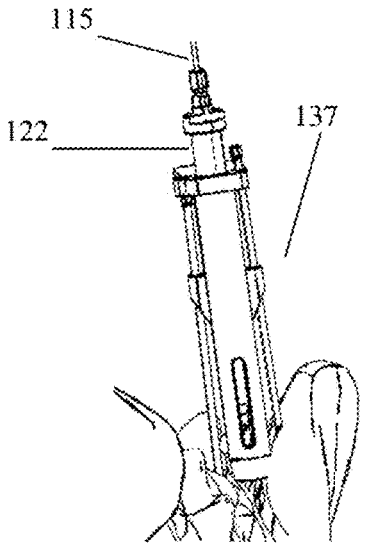

FIG. 84

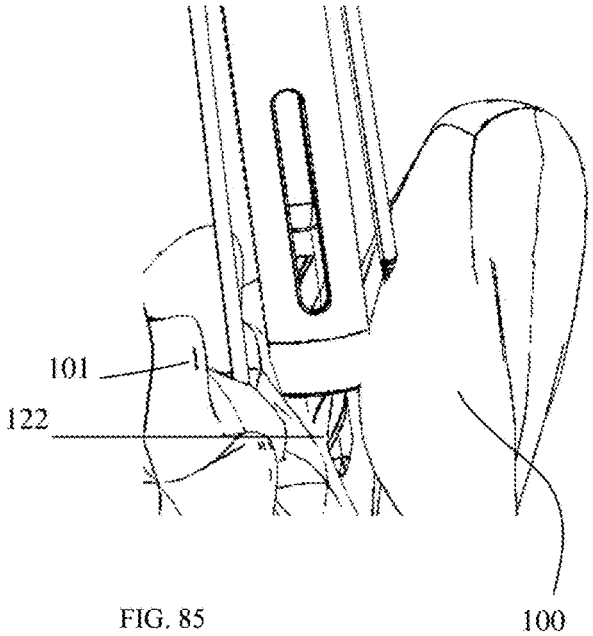

FIG. 85

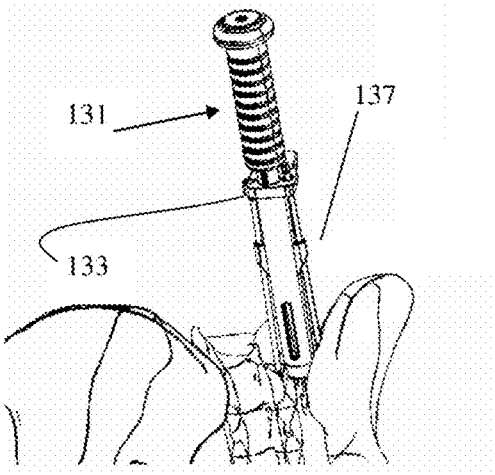

FIG. 86

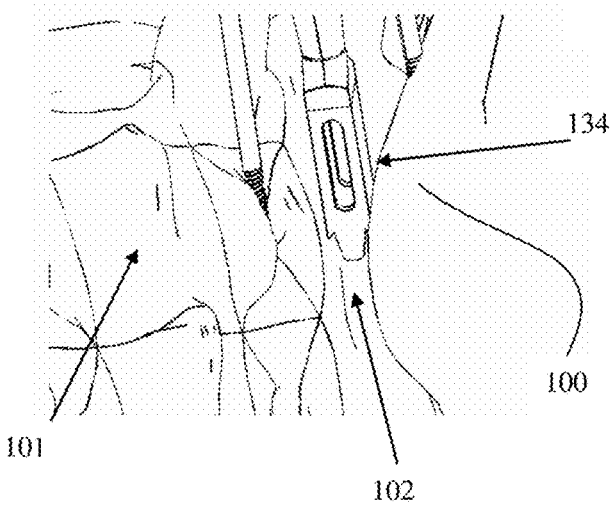

FIG. 87

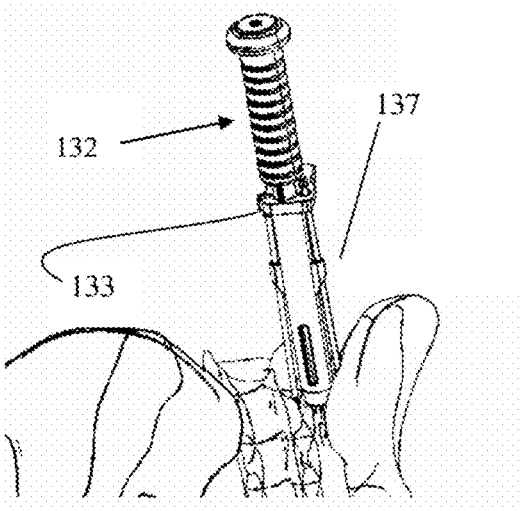

FIG. 88

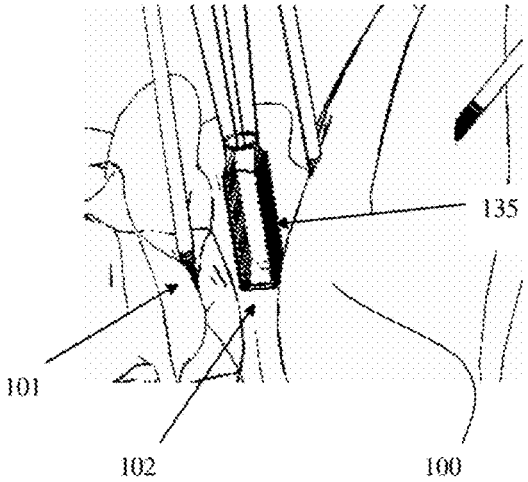

FIG. 89

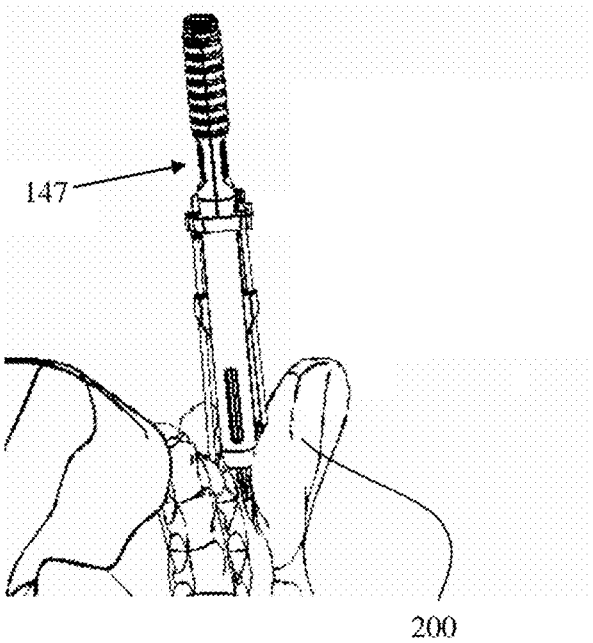

FIG. 90

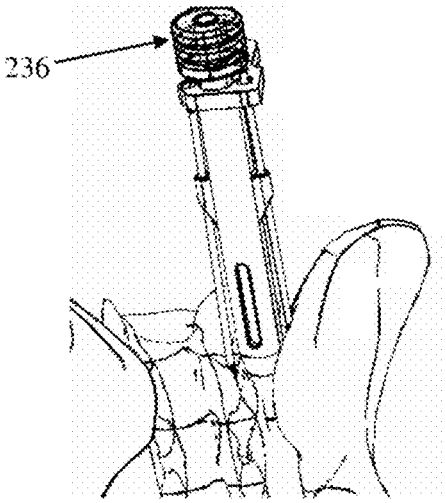

FIG. 91

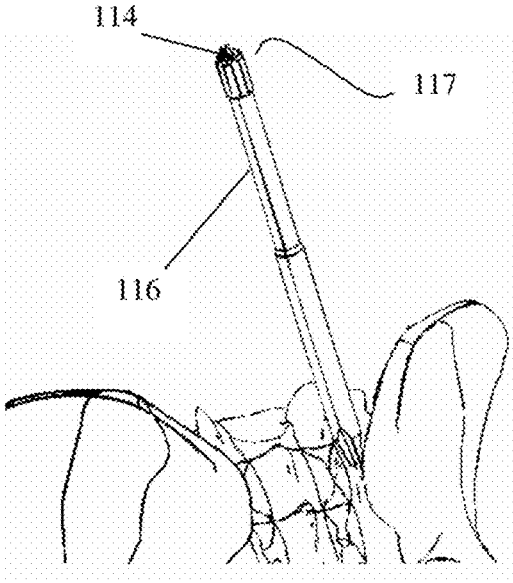

FIG. 92

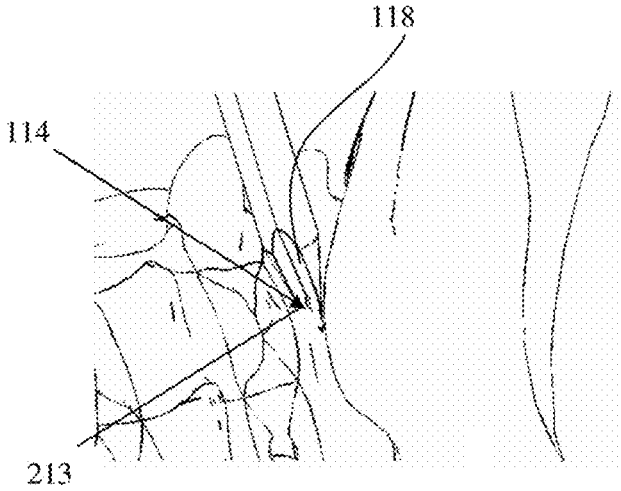

FIG. 93

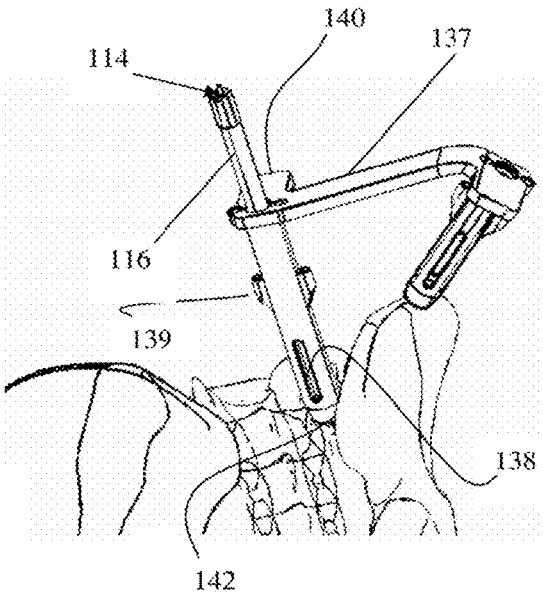

FIG. 94

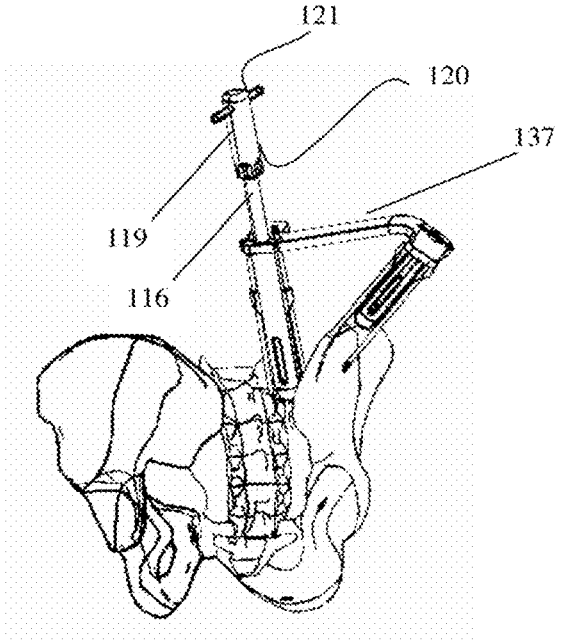

FIG. 95

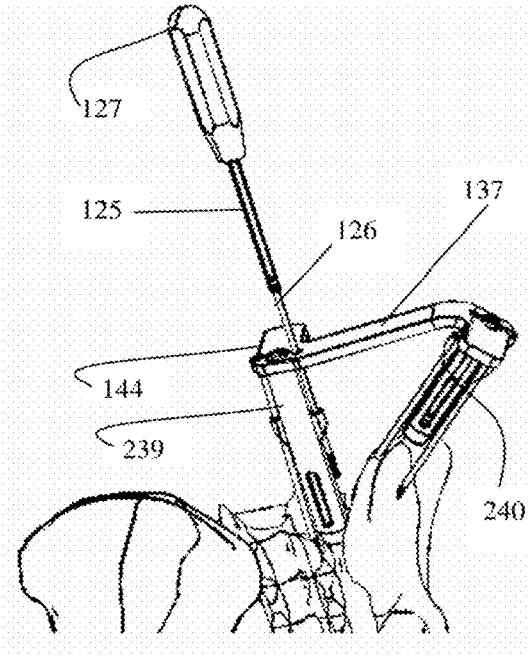

FIG. 96

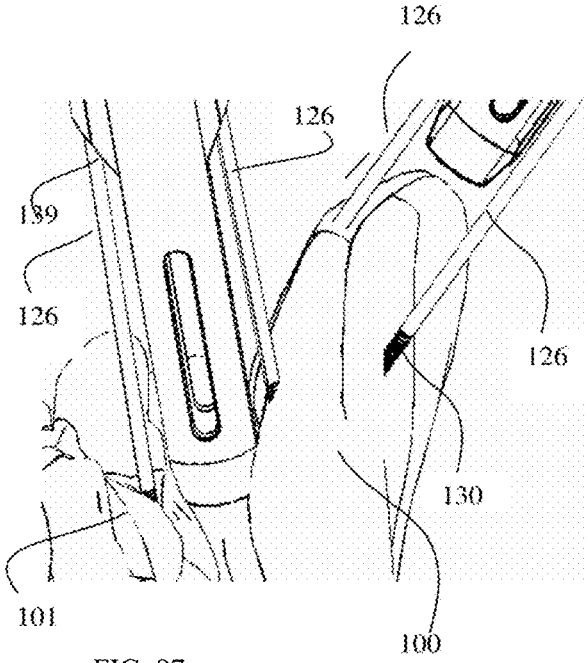

FIG. 97

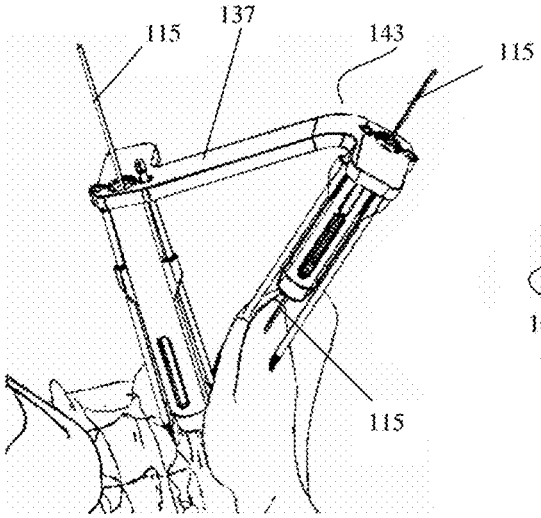

FIG. 98

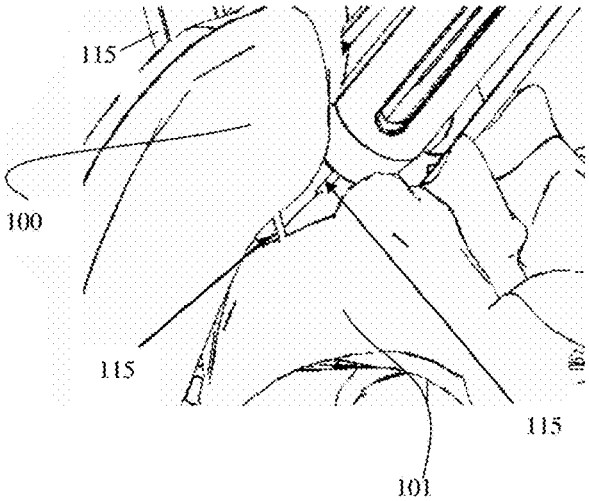

FIG. 99

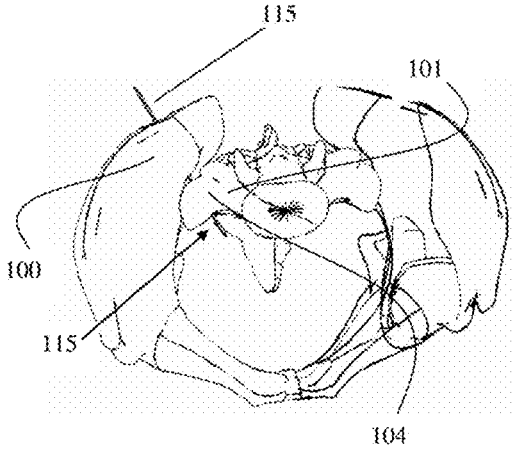

FIG. 100

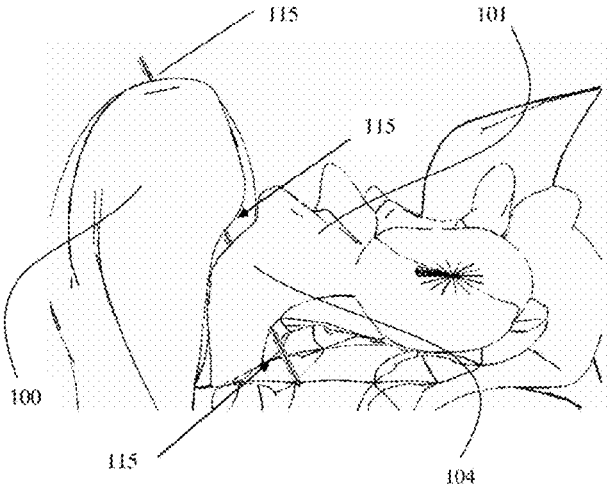

FIG. 101

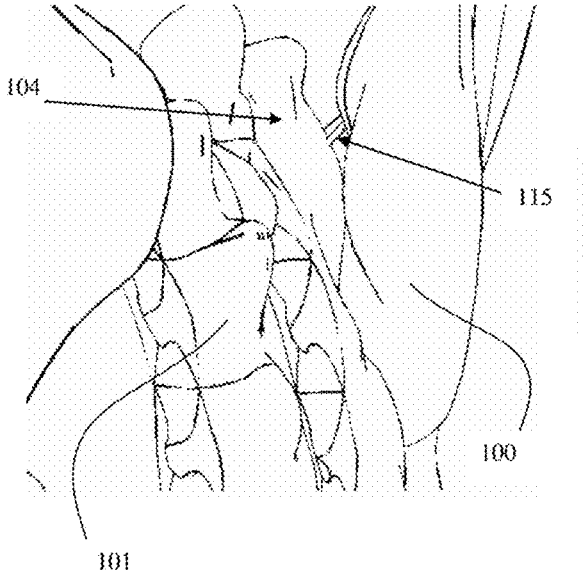

FIG. 102

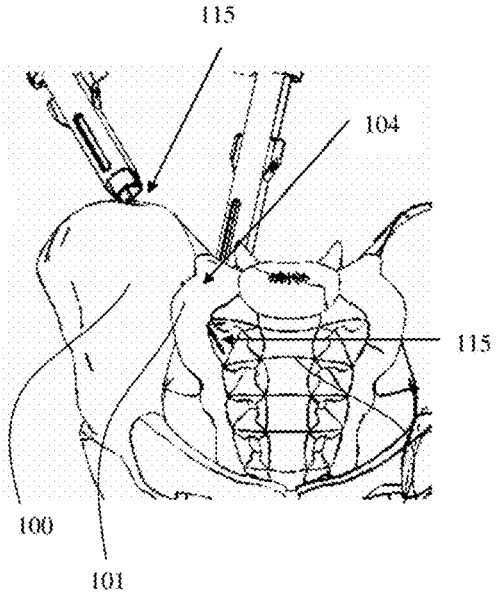

FIG. 103

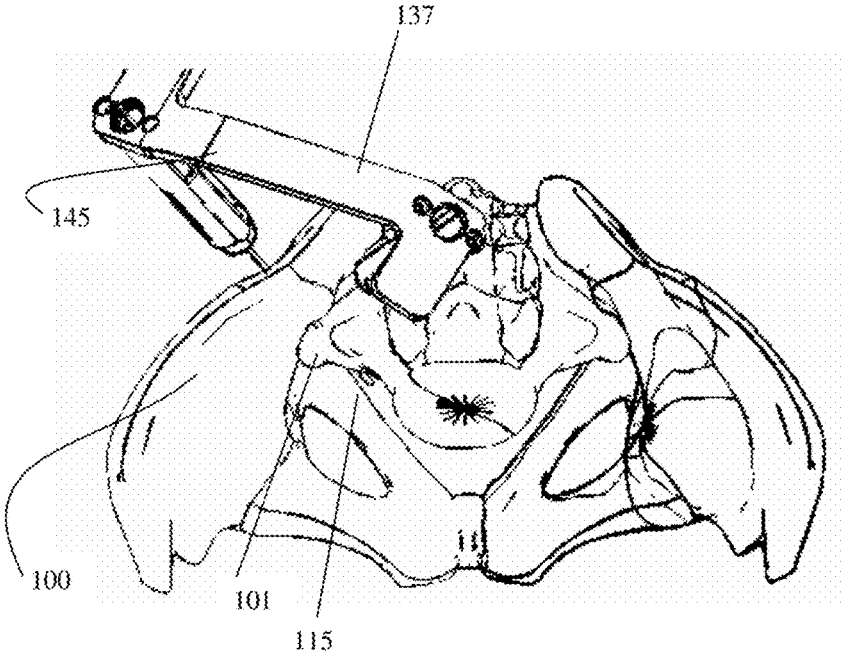

FIG. 104

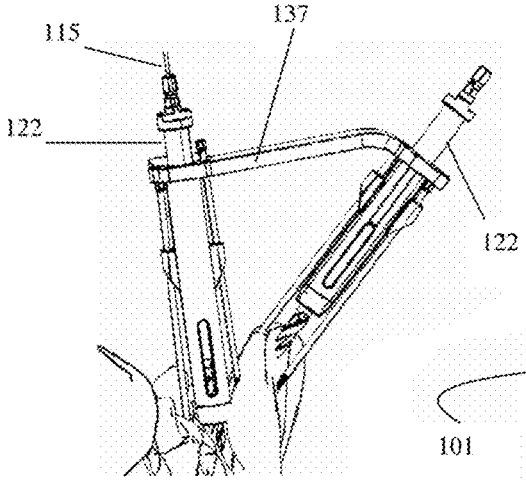

FIG. 105

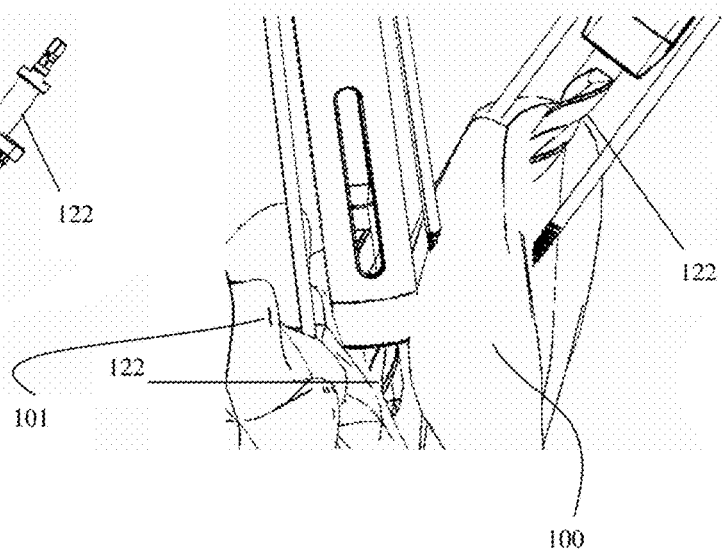

FIG. 106

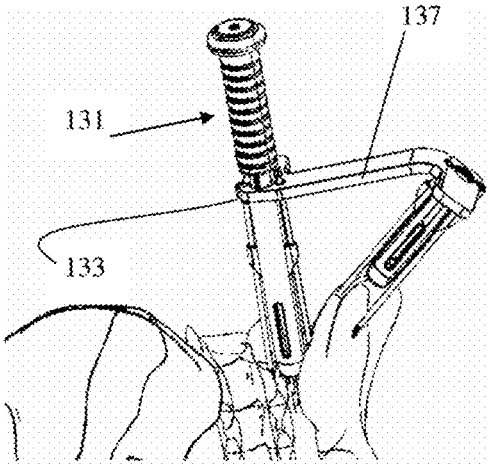

FIG. 107

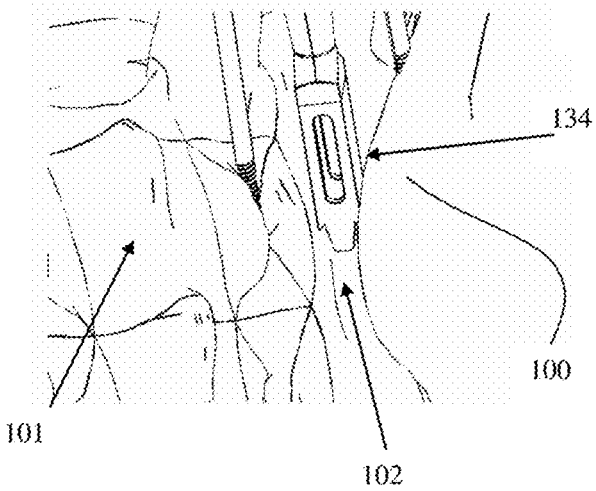

FIG. 108

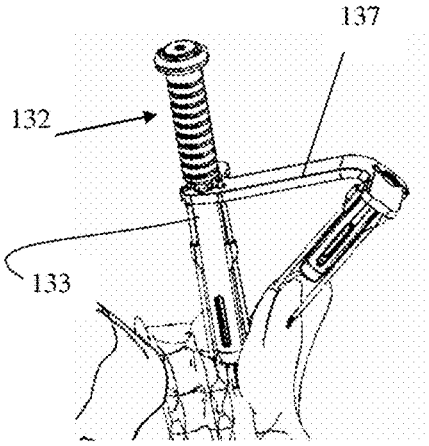

FIG. 109

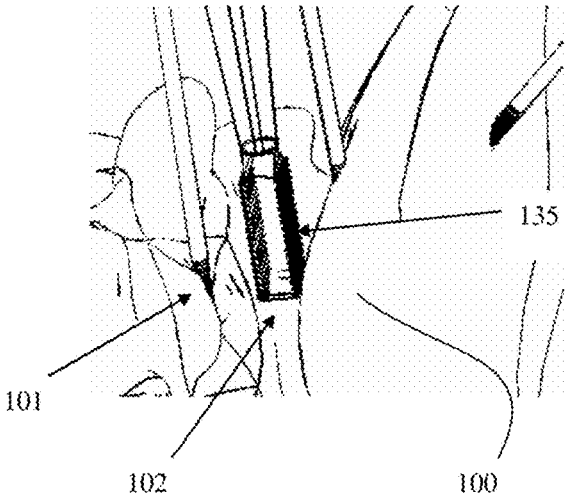

FIG. 110

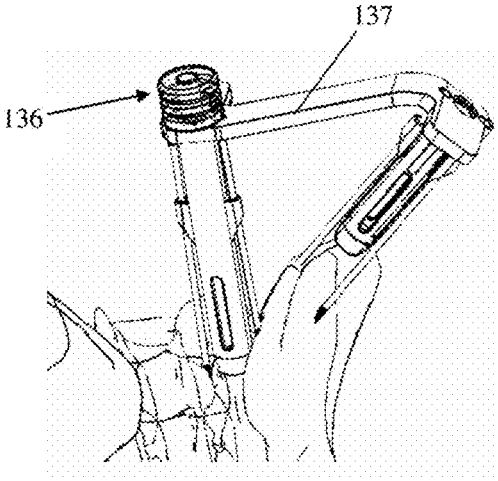

FIG. 111

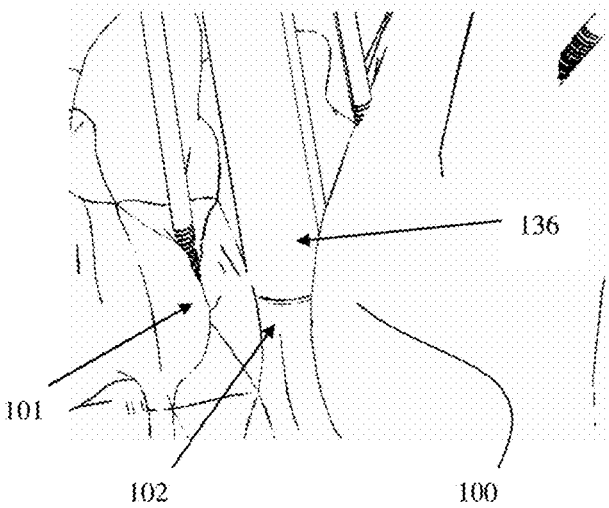

FIG. 112

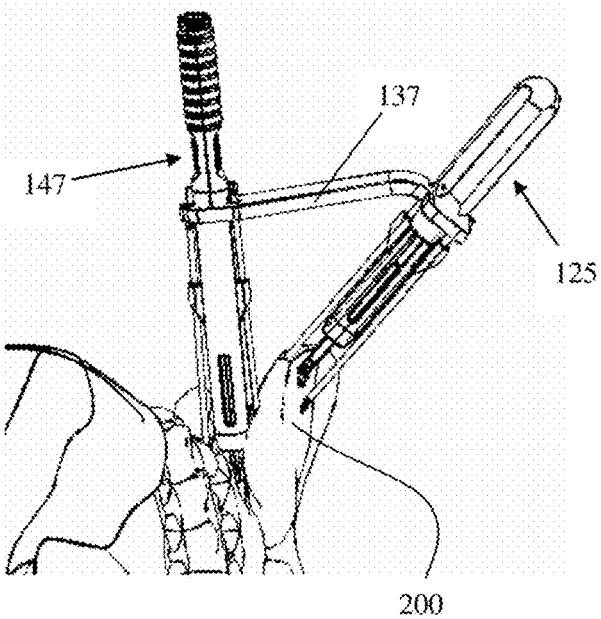

FIG. 113

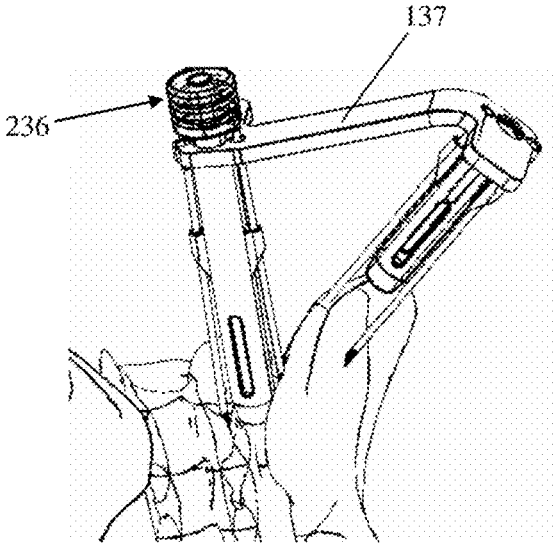

FIG. 114

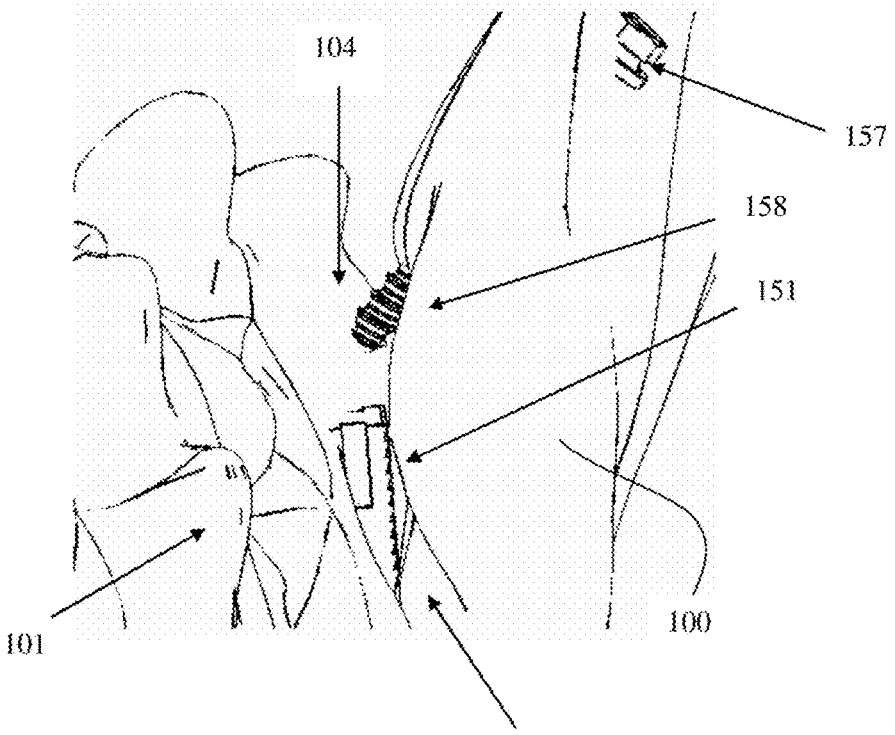

FIG. 115

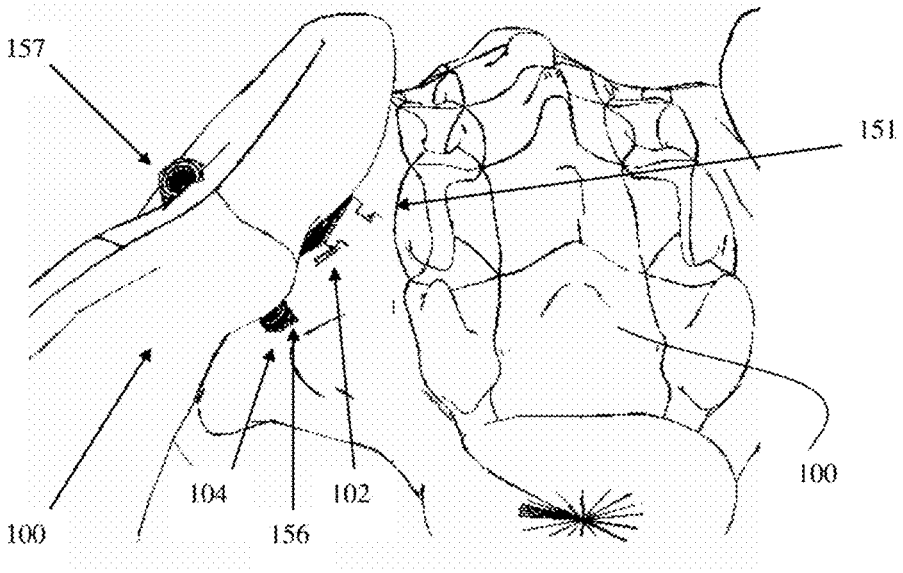

FIG. 116

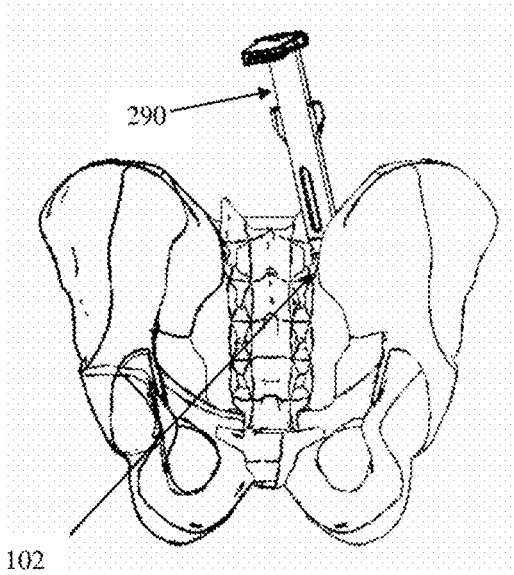

FIG. 117

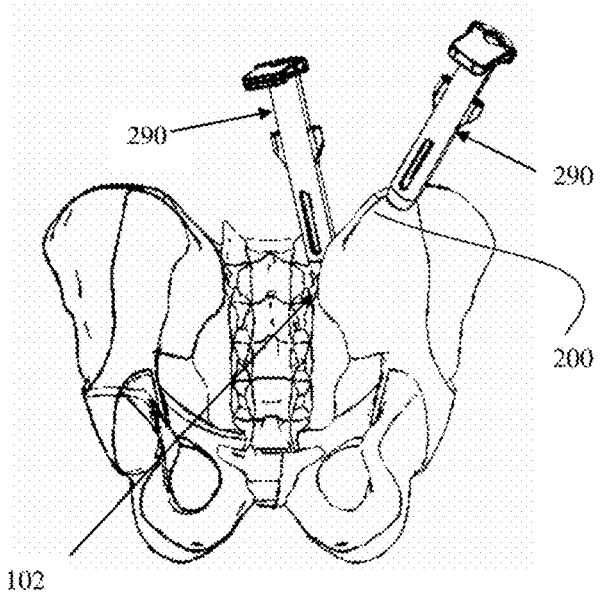

FIG. 118

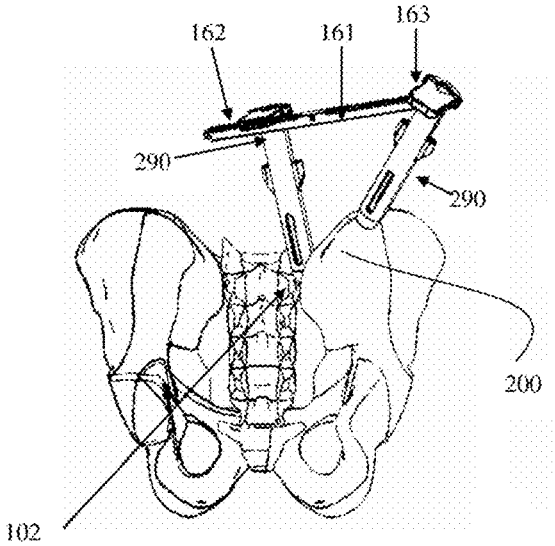

FIG. 119

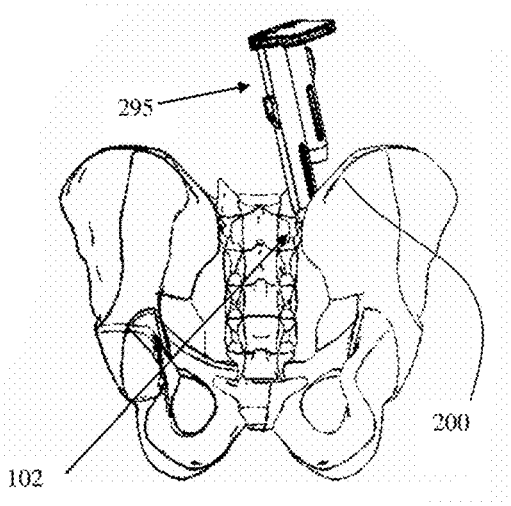

FIG. 120

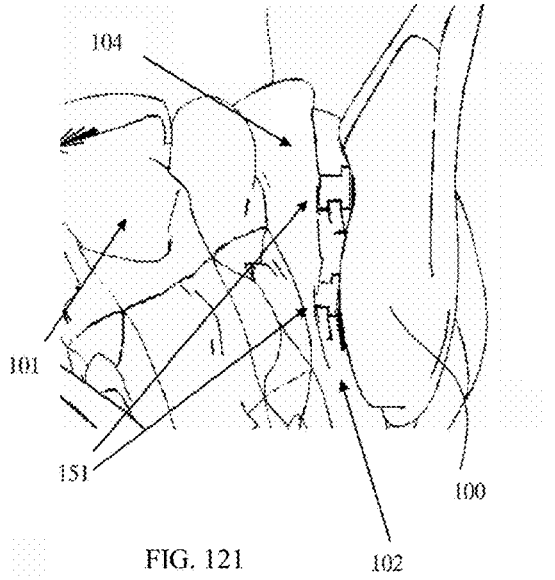

FIG. 121

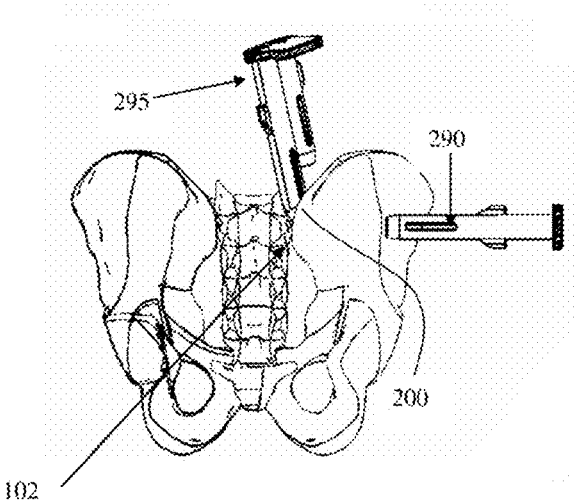

FIG. 122

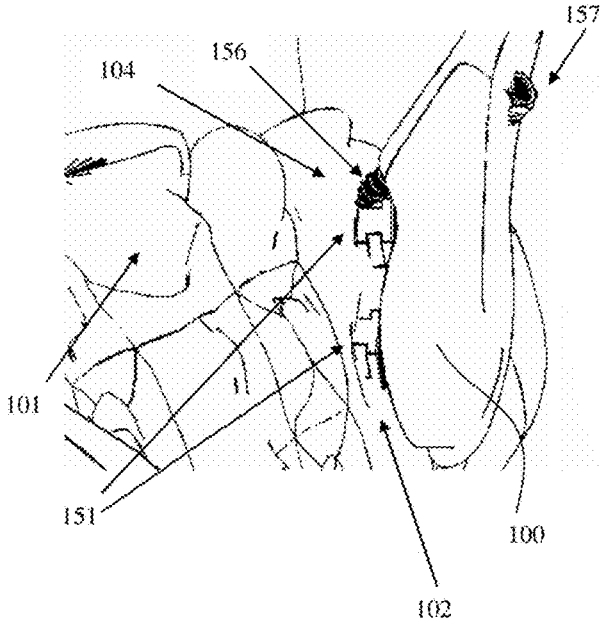

FIG. 123

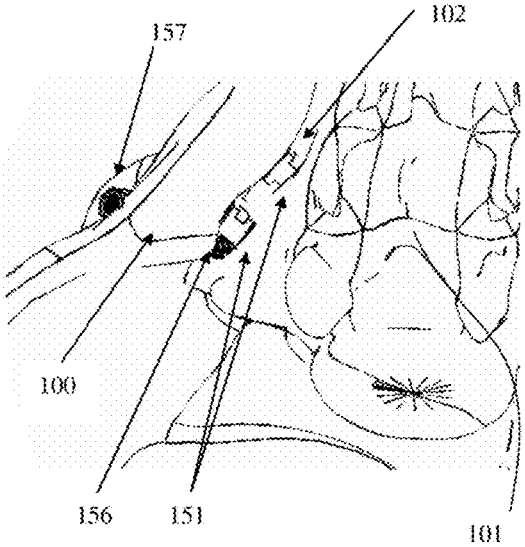

FIG. 124

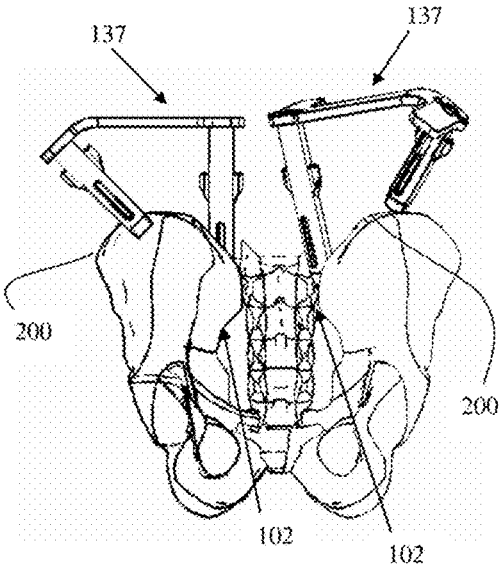

FIG. 125

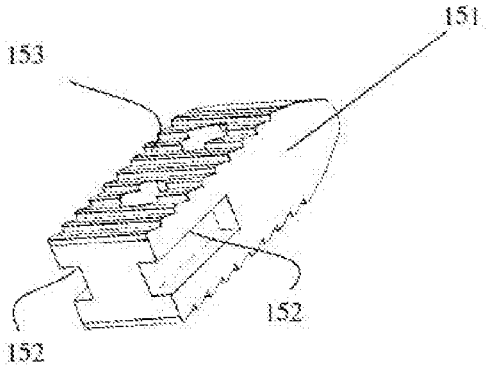

FIG.126

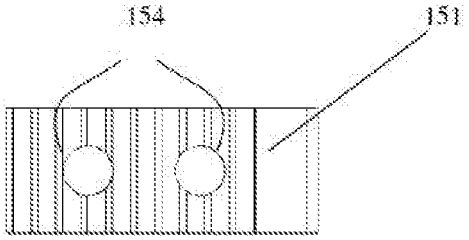

FIG. 127

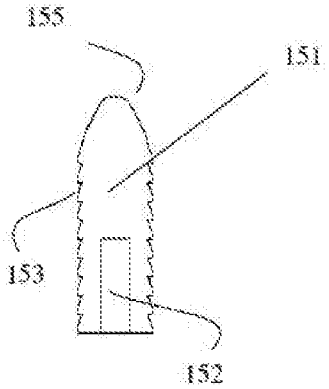

FIG. 128

METHOD AND IMPLANT SYSTEM FOR SACROILIAC JOINT FIXATION AND FUSION

FIELD OF THE INVENTION

The present invention relates generally to medical devices and medical methods. More particularly, the present invention relates to musculoskeletal surgical methods and associated surgical tools for treatment of the sacroiliac joint.

DISCUSSION OF THE BACKGROUND

Lower back pain is a common ailment among the population and results in both pain and suffering as well as loss of work time. Thus, approaches for the treatment of back pain can both relieve suffering as well as reduce employee down time. Thus, effective treatments for lower back pain have both economic benefits as well as the benefit of alleviating considerable suffering.

The sacroiliac joint is located in the lower back at the juncture of the ilium, the upper bone of the pelvis, and the sacrum at the base of the spine. While the sacroiliac joint has a limited range of motion, dysfunction of the joint has been identified. The joint is supported by a range of ligaments including, for example, the sacroiliac ligament at the base of the joint and the anterior sacroiliac ligament at the top of the joint.

The sacroiliac joint (SI joint) is increasingly being diagnosed as a common pain generator. That is, SI joint degenerative disease and instability are being diagnosed and treated more commonly. Sacroiliac pain may be caused by a disruption in the joint itself, a biomechanical problem like a muscle imbalance, trauma, an inflammatory condition like ankylosing spondylitis, or a degenerative problem as seen with post-lumbar fusion adjacent segment disorder. Other contributing factors include post pregnancy pain/instability, longer life span, and/or more active lifestyles. In addition, complex spine surgeries, such as for correction of sagittal plane deformity, often require iliac fixation to maintain correction in patients with a high pelvic incidence or high risk of lumbo-sacral hardware failure.

High energy pelvic ring injuries that involve disruption of the SI joint and/or displaced fractures of the sacrum present unique challenges to the orthopedic traumatologist. Some sacral fractures require solid posterior stabilization, which may be difficult to achieve with typical treatment methods. Furthermore, vertically unstable sacral fractures/SI joint disruptions have a relatively high incidence of neurovascular injury and may require unique stabilization. Typically, a spinal surgeon will be involved to perform lumbo-pelvic stabilization of these injuries to provide vertical stability of the injury. However, there may be significant soft tissue trauma associated with these injuries, making extensive surgical approaches of elevated risk in terms of infection and wound complications.

Immobilization of the SI joint can result in significant relief of lower back pain. Current techniques and instrumentation systems may require extensive surgical exposure and dissection. Moreover, such instrumentation systems are typically designed for other applications, and not to connect and stabilize the lumbar spine and pelvis. As a result, this can make the surgical times longer and more frustrating for surgeons and surgical staff. For example, traditional posterior iliac screws are often prominent because the posterior iliac crest is relatively subcutaneous. Yet, this sometimes

makes hardware painful for the patient and at risk for pressure soreness following surgery.

Furthermore, the current techniques and instruments do not allow for a secure and consistent fusion construct. They may provide one or the other many times, but not both issues. This may lead to further SI joint instability and a failed surgery.

It is therefore desirable to provide new surgical methods and tools for treating damaged sacroiliac joints that securely and consistently fuse the joint.

SUMMARY OF THE INVENTION

The present invention is an improved methods and devices for the immobilization or fusion of the Sacroiliac joint and apparatuses for facilitating the procedure. Immobilization may refer to mechanical holding or surgical fusion.

The present invention provides a system and surgical tools for introducing fusion implants that may perform the functions of mechanical fixation and stability, compression, and bony fusion. The present invention also relates to improved implant devices that may perform the functions of mechanical fixation and stability, compression, and bony fusion. The present invention also relates to methods of introducing fusion implants into a targeted joint through a novel exposure device. Specifically, with respect to some embodiments, an approach is described to address the SI joint through a posterior access approach while delivering fusion device that includes both a cavity or channel for graft or fusion-promoting material and fixation elements which can be in the form of helical anchors, claw or fluke anchors, blades, screws, and/or other fixation elements, which provide for compression across the sacroiliac joint. In some embodiments, a double barreled exposure device may be utilized to address the SI joint through a posterior approach while delivering both a fusion device to the SI joint and a separate fixation device for fixing the sacrum and ilium together, which can be in the form of a screw, or the like.

It is therefore an object of the present invention to provide an improved approach for both mechanical holding and surgical fusion through novel exposure devices described herein. The implants described herein may be introduced through a posterior approach to address the SI joint and the fusion device may perform the functions of fixation, compression, and bony fusion, providing a secure fixation element for mechanical stability and a bony fusion element that allows for fusion between the sacrum and the ilium.

It is also an object of the present invention to provide an improved, combined approach for both mechanical holding and surgical fusion using novel fusion devices that may be introduced through a novel exposure device through a posterior approach, while delivering a separate fixation device which can be in the form of a screw, or the like. Furthermore, the fusion device is delivered to the joint, placed between the sacrum and ilium, while the fixation device is delivered through the iliac wing, closest to the iliac crest, into the sacrum while not entering or going across the SI joint.

It is also an object of the present invention to provide novel fusion implants that are capable of performing perform the functions of fixation, compression, and bony fusion, allowing for stable fusion of the SI joint through a single posterior approach. However, such fusion implants may be used in combination with other devices to mechanically fix and stabilize the joint.

In some embodiments, the present invention relates to a fusion implant, comprising an elongate body adapted for placement in an intra-articular space between articular surfaces of a joint in general longitudinal alignment with a plane between the articular surfaces of the joint; at least one fixation element for engagement with bone tissue in at least one of the articular surfaces of the joint; and a cavity in the implant for holding a fusion-promoting material.

In some embodiments, the present invention relates to a medical instrument kit, including a joint fusion implant having a central body and at least one lateral fixation element for engagement with bone tissue in articular surfaces of a joint, and a surgical tool having a working channel for insertion into an incision (e.g., over a sacroiliac joint) in a human or animal, the working channel having a hollow barrel having a shape for receiving the joint fusion implant including the at least one lateral fixation element. The surgical tool may include at least one tang at the distal end thereof for insertion in a joint exposed by the incision, where the tang is operable to secure maintain a position of the working channel in the joint. In some implementations, and without limitation, the hollow barrel may have an oblong cross-sectional shape for accommodating the joint fusion implant and allowing the at least one fixation element to pass through the hollow barrel without obstruction, where the hollow barrel has a substantially uniform transverse cross section having a substantially elliptical shape and the elongate portions of the elliptical cross-section function as channels for receiving the at least one lateral fixation element. In some implementations, and without limitation, the hollow barrel may have at least one lateral slot running longitudinally along the hollow barrel to allow the at least one fixation element to pass through the interior passage without obstruction. In some embodiments, and without limitation, the surgical tool may further include a second working channel that is inserted into a second incision over an iliac wing of the human patient adjacent to the sacroiliac joint when the working channel is inserted into the sacroiliac joint. In some implementations, and without limitation, the working channel and the second working channel are connected by a connecting bar having a bend therein, and are connected at an acute angle that allows the working channel to be engaged with a posterior side of the sacroiliac joint and the second working channel to be engaged with a posterior portion of the iliac wing simultaneously. The kit may further include additional instruments to establish the working channels in the first and second incisions, and for introducing the fusion implant into the SI joint and a joint fixation device (e.g., a surgical screw) into the ilium and sacrum without traversing the SI joint, including a drill operable to be passed through the working channel into the incision and drilling a void through the connective tissues in the SI joint, as well as drill bits; an inserter having a proximal end configured to attach to the fusion implant, the inserter being operable to pass the fusion implant through the hollow barrel and into the joint; an impactor for driving the fusion implant into the joint, wherein driving the fusion implant engages the at least one fixation element with articular surfaces in the joint; joint cutting instruments; dilators; guide wires; guide pins; guide pin assemblies; a rasp; a box chisel; a driver for inserting surgical screws (e.g., a flex-shaft driver); adjustable arms for stabilizing the working channels; and other tools that may be utilized in establishing incisions and access to a joint or bone tissue.

In some embodiments, the present invention relates to a method including creating an incision proximal to the patient's SI joint, dilating the incision, engaging an exposure device with the incision, creating a void in the SI joint, and inserting and securing a joint fusing device in the void between the ilium and sacrum.

In some embodiments, the present invention relates to a method including creating an incision proximal to the patient's SI joint, creating an incision over iliac wing, dilating the incisions, engaging the exposure device with both incisions, creating a void in the SI joint, inserting a graft into the void, drilling a hole through the ilium and the S1 vertebra of the sacrum, and inserting a joint fusing device in the ilium and sacrum.

In some embodiments, the present invention relates to a method for repairing a sacroiliac joint of a patient that includes creating a first incision in the patient's skin proximal to the patient's sacroiliac joint; inserting a first working channel into the first incision and spreading the sacroiliac joint with an inserted end of the first working channel; creating a void in the sacroiliac joint; inserting a fusion implant into the void, the fusion implant having at least one fixation element for engagement with bone tissue in the articular surfaces of the sacrum and the ilium in the sacroiliac joint; creating a second incision in the patient's skin over an iliac wing of the patient adjacent to the sacroiliac joint; inserting a second working channel into the second incision wherein a longitudinal axis of the second working channel does not intersect the sacroiliac joint; and inserting a joint fixation device into the ilium and the sacrum through the second working channel, wherein the joint fixation device does not traverse the sacroiliac joint.

In some embodiments, the present invention relates to a method including preparing the patient for surgery (e.g., positioning the patient in a prone position to provide the surgeon access to the SI joint, general or local anesthesia, and the like), locating the SI joint and an incision point for access to the SI joint (e.g., by blunt finger palpation), insertion of a pin or wire to create an incision, insertion of a dilator over the pin and impacting the dilator to dilate the incision to a width through which instruments may be passed, inserting a working channel of an exposure device over the dilator, securing the working channel in position with fixing pins, removing the dilator, inserting a drill bit apparatus through the work channel, using the drill bit apparatus in the working channel to displace bone in the SI joint thereby creating a void, removing the drill bit apparatus, loading a joint fusion device into the first working channel until the joint fusion device is positioned proximal to the void in the patient's SI joint, inserting an impactor into the working channel and applying force to displace the graft into the void in the patient's SI joint, inserting a driver into the working channel, engaging the joint fusion device with the driver, and rotating the driver to rotate the joint fusion device such that anchoring devices on said joint fusion device engage with bone tissue of at least one of the sacrum and the ilium, removing all instruments, and closing the incision.

In some embodiments, the present invention relates to a joint fixation method including preparing the patient for surgery (e.g., positioning the patient in a prone position to provide the surgeon access to the SI joint, general or local anesthesia, and the like), locating the SI joint and an incision point for access to the SI joint (e.g., by blunt finger palpation), insertion of a pin or wire to create an incision, insertion of a dilator over the pin and impacting the dilator to dilate the incision to a width through which instruments may be passed, inserting a working channel of an exposure device over the dilator, securing the working channel in position with fixing pins, removing the dilator, inserting a

drill bit apparatus through the work channel, using the drill bit apparatus in the working channel to displace bone in the SI joint thereby creating a void, removing the drill bit apparatus, excavating cortical bone tissue from articular surfaces within the joint, loading a joint fusion device into the first working channel until the joint fusion device is positioned proximal to the void in the patient's SI joint, inserting an impactor into the working channel and applying force to displace the joint fusion device into the void in the patient's SI joint, removing all instruments, and closing the incision.

In some embodiments, the present invention relates to a method of implanting a fusion device into a sacroiliac joint of a patient, including creating an incision in the patient's skin proximal to the patient's sacroiliac joint; using a joint probe to identify the sacroiliac joint; inserting a guide wire through a canal in the joint probe and into the sacroiliac joint; slotting a surgical channel device over the guide wire, the surgical channel device having a working channel; creating a void in the sacroiliac joint, wherein creating the void comprises displacing a portion of the patient's ilium and a portion of the patient's sacrum with an inserted end of the working channel, inserting a drill bit into the working channel, and drilling the void into the sacroiliac joint; inserting a fusion implant into the void, wherein the fusion implant includes a plurality of fixation elements and is configured to substantially compress, fix, and fuse the patient's ilium to the patient's sacrum; and engaging the fixation elements of the fusion implant with bone tissue in the articular surfaces of the patient's ilium and sacrum.

In some embodiments, the present invention relates to a method including preparing the patient for surgery (e.g., positioning the patient in a prone position to provide the surgeon access to the SI joint, general or local anesthesia, and the like), making a small incision over the top of the iliac wing from a posterior approach, locating the SI joint and an incision point for access to the SI joint (e.g., by blunt finger palpation), insertion of a pin or wire to create an incision, insertion of a dilator over the pin and impacting the dilator to dilate the incision to a width through which instruments may be passed, inserting a first working channel of a double-barreled, double-angled exposure device over the dilator and inserting a second working channel of said exposure device in the incision over the iliac wing, securing the first and second working channels in position with fixing pins, removing the dilator, inserting a drill bit apparatus through each of the first and second work channels, using the drill bit apparatus in the first working channel to displace bone in the SI joint thereby creating a void, using the drill bit apparatus (or a second drill bit apparatus) in the second working channel to drill a hole in the iliac crest and the S1 vertebra of the sacrum, removing the drill bit apparatus, loading a graft onto an inserter and inserting the graft and inserter into the first working channel until the graft is positioned proximal to the void in the patient's SI joint, inserting an impactor into the first working channel and applying force to displace the graft into the void in the patient's SI joint, inserting a joint fusion device coupled to a fusion device inserter into the second working channel and implanting said joint fusion device in the hole in the iliac crest and the sacrum, removing all instruments, and closing the incisions.

Additional objects of the invention will be apparent from the detailed descriptions and the claims herein.

BRIEF DESCRIPTION OF THE DRAWINGS

FIG. **1** is an anterior view of the bony anatomy of the pelvis and sacrum.

FIG. **2** is a posterior view of the bony anatomy of the pelvis and sacrum.

FIG. **3** is a right lateral view of the bony anatomy of the pelvis and sacrum.

FIG. **4** is a left lateral view of the bony anatomy of the pelvis and sacrum.

FIG. **5** is a superior view of the bony anatomy of the pelvis and sacrum.

FIG. **6** is an inferior view of the bony anatomy of the pelvis and sacrum.

FIG. **7** is an oblique view of the right sacroiliac joint.

FIG. **8** is a perspective view of a joint probe.

FIG. **9** is an enlarged view of the joint probe in FIG. **8**.

FIG. **10** is an end view of the joint probe in FIG. **8**.

FIG. **11** is a perspective view of a guide pin.

FIG. **12** is an end view of the guide pin in FIG. **11**.

FIG. **13** is a perspective view of a joint cutting instrument.

FIG. **14** is an enlarged view of the joint cutting instrument in FIG. **13**.

FIG. **15** is an end view of the joint cutting instrument in FIG. **13**.

FIG. **16** is a perspective view of a t-handle addition for a joint cutting instrument.

FIG. **17** is an end view of the t-handle addition in FIG. **16**.

FIG. **18** is a perspective view of a joint cutting assembly.

FIG. **19** is an exploded, perspective view of the joint cutting assembly in FIG. **18**.

FIG. **20** is a perspective view of a drill bit.

FIG. **21** is an end view of the drill bit in FIG. **20**.

FIG. **22** is a perspective view of a fixation pin insertion assembly.

FIG. **23** is an exploded, perspective view of the fixation pin insertion assembly in FIG. **22**.

FIG. **24** is a side view of a box chisel.

FIG. **25** is a side view of a rasp.

FIG. **26** is a perspective view of a bone graft impactor.

FIG. **27** is a perspective view of a surgical tool according to an embodiment of the present invention.

FIG. **28** is a side view of a surgical tool according to an embodiment of the present invention.

FIG. **29** is a top view of a surgical tool according to an embodiment of the present invention.

FIG. **30** is a perspective view of a surgical tool according to an embodiment of the present invention.

FIG. **31** is a perspective view of a surgical tool according to an embodiment of the present invention.

FIG. **32**A is a close-up perspective view of the distal end of a surgical tool according to an embodiment of the present invention, where the surgical includes tangs at a distal end thereof.

FIG. **32**B is a close-up perspective view of the distal end of a surgical tool according to an embodiment of the present invention, where the surgical includes tangs at a distal end thereof.

FIG. **33** is a perspective view of a surgical tool according to an embodiment of the present invention.

FIG. **34** is a side view of a surgical tool according to an embodiment of the present invention.

FIG. **35** is a top view of a surgical tool according to an embodiment of the present invention.

FIG. **36** is a bottom view of a surgical tool according to an embodiment of the present invention.

FIG. **37** is an isolated, top view of a surgical tool according to an embodiment of the present invention.

FIG. **38** is a perspective view of a fusion implant inserter for use with a surgical tool according to an embodiment of the present invention.

FIG. **39** is a perspective view of a fusion implant inserter engaged with a fusion implant for use with a surgical tool according to an embodiment of the present invention

FIG. **40** is a cross sectional view of one barrel of a surgical tool according to an embodiment of the present invention.

FIG. **41** is a cross sectional, side view of one barrel a surgical tool according to an embodiment of the present invention engaged with a fusion implant inserter.

FIG. **42** is a cross sectional, side view of one barrel a surgical tool according to an embodiment of the present invention engaged with a fusion implant inserter.

FIG. **43** is a cross sectional, side view of one barrel a surgical tool according to an embodiment of the present invention fully engaged with a fusion implant inserter.

FIG. **44** is a perspective view of a fixation implant assembly.

FIG. **45** is an exploded, perspective view of a fixation implant assembly.

FIG. **46** is a perspective view of a fixation implant insertion assembly.

FIG. **47** is an exploded, perspective view of a fixation implant insertion assembly.

FIG. **48** is a perspective view of an adjustable rack for attaching working channels according to an embodiment of the present invention.

FIG. **49** is a perspective view of a fusion implant having helical fixation elements according to an embodiment of the present invention.

FIG. **50** is a side perspective view of a fusion implant having helical fixation elements according to an embodiment of the present invention.

FIG. **51** is a distal view of a fusion implant having helical fixation elements according to an embodiment of the present invention.

FIG. **52** is a perspective view of a fusion implant having a helical fixation element according to an embodiment of the present invention.

FIG. **53** is a side view of a fusion implant having a helical fixation element according to an embodiment of the present invention.

FIG. **54** is a distal view of a fusion implant having a helical fixation element according to an embodiment of the present invention.

FIG. **55** is an oblique, posterior view of the sacroiliac joint with a fusion implant having helical fixation elements placed in the sacroiliac joint through a posterior approach according to an embodiment of the present invention.

FIG. **56** is a perspective view of a fenestrated sacroiliac fusion implant having lateral flukes according to an embodiment of the present invention.

FIG. **57** is a side perspective view of a fenestrated sacroiliac fusion implant having lateral flukes according to an embodiment of the present invention.

FIG. **58** is an oblique, posterior view of the sacroiliac joint with a fenestrated fusion implant having lateral flukes placed in the sacroiliac joint through a posterior approach according to an embodiment of the present invention.

FIG. **59** is a perspective view of an open-body, compression screw sacroiliac fusion implant according to an embodiment of the present invention.

FIG. **60** is a superior view of an open-body, compression screw sacroiliac fusion implant according to an embodiment of the present invention.

FIG. **61** is a side view of an open-body, compression screw sacroiliac fusion implant according to an embodiment of the present invention.

FIG. **62** is an oblique, posterior view of the sacroiliac joint with an open-body, compression screw sacroiliac fusion implant placed in the sacroiliac joint through a posterior approach according to an embodiment of the present invention.

FIG. **63** is a perspective view of an open-body sacroiliac fusion implant having lateral blades according to an embodiment of the present invention.

FIG. **64** is a superior view of an open-body sacroiliac fusion implant having lateral blades according to an embodiment of the present invention.

FIG. **65** is a perspective view of an open-body sacroiliac fusion implant having detachable lateral blades according to an embodiment of the present invention.

FIG. **66** is a perspective view of a detached lateral blade for an open-body sacroiliac fusion implant according to an embodiment of the present invention.

FIG. **67** is an oblique, posterior view of the sacroiliac joint with an open-body sacroiliac fusion implant having lateral blades placed in the sacroiliac joint through a posterior approach according to an embodiment of the present invention.

FIG. **68** is a perspective view of an open-body sacroiliac fusion implant having a rotatable member with lateral flukes according to an embodiment of the present invention.

FIG. **69** is a proximal view of an open-body sacroiliac fusion implant having a rotatable member with lateral flukes according to an embodiment of the present invention.

FIG. **70** is a side view of an open-body sacroiliac fusion implant having a rotatable member with lateral flukes according to an embodiment of the present invention.

FIG. **71** is an oblique posterior view of the sacroiliac joint.

FIG. **72** is an oblique posterior view of the sacroiliac joint and a joint probe.

FIG. **73** is an oblique posterior view of the sacroiliac joint and a joint probe with the joint probe identifying the SI joint.

FIG. **74** is an enlarged oblique posterior view of the sacroiliac joint and a joint probe with the joint probe identifying the SI joint.

FIG. **75** is an oblique posterior view of the SI joint and a joint probe with a guide pin marking the SI joint.

FIG. **76** is an oblique posterior view of an SI joint with a joint cutting instrument entering the joint.

FIG. **77** is an enlarged oblique posterior view of an SI joint with a joint cutting instrument entering the joint.

FIG. **78** is an oblique posterior view of a surgical tool according to an embodiment of the present invention inserted into an SI joint.

FIG. **79** is an oblique posterior view of a joint cutting assembly and a surgical tool according to an embodiment of the present invention inserted into an SI joint.

FIG. **80** is an oblique posterior view of an SI joint with a surgical tool according to an embodiment of the present invention and a fixation pin assembly.

FIG. **81** is an enlarged oblique posterior view displaying a fixation pin assembly and a surgical tool according to an embodiment of the present invention.

FIG. **82** is an oblique posterior view of a surgical tool according to an embodiment of the present invention inserted into an SI joint with the guide pins marking implant placements.

FIG. **83** is an enlarged, superior view of a surgical tool according to an embodiment of the present invention inserted into an SI joint with the guide pins marking implant placements.

FIG. **84** is an oblique posterior view of a surgical tool according to an embodiment of the present invention inserted into an SI joint with drill bits present in working channel of the surgical tool.

FIG. **85** is an enlarged oblique posterior view of a surgical tool according to an embodiment of the present invention inserted into an SI joint with drill bits present in working channel of the surgical tool.

FIG. **86** is an oblique posterior view of a surgical tool according to an embodiment of the present invention inserted into an SI joint with a box chisel inserted into a working channel of the surgical tool.

FIG. **87** is an enlarged oblique posterior view of a box chisel inserted into an SI joint, with a working channel removed from view for clarity.

FIG. **88** is an oblique posterior view of a surgical tool according to an embodiment of the present invention inserted into an SI joint with a rasp inserted into a working channel of the surgical tool.

FIG. **89** is an enlarged oblique posterior view of a rasp inserted into an SI joint, with a working channel removed from view for clarity.

FIG. **90** is an oblique posterior view of a surgical tool according to an embodiment of the present invention inserted into an SI joint with a fusion implant inserter inserted into a working channel of the surgical tool.

FIG. **91** is an oblique posterior view of a surgical tool according to an embodiment of the present invention inserted into an SI joint with an impactor inserted into a working channel of the surgical tool.

FIG. **92** is an oblique posterior view of an SI joint with a joint cutting instrument entering the joint.

FIG. **93** is an enlarged oblique posterior view of an SI joint with a joint cutting instrument entering the joint.

FIG. **94** is an oblique posterior view of a surgical tool engaged with the sacroiliac joint and the iliac wing according to an embodiment of the present invention inserted into an SI joint.

FIG. **95** is an oblique posterior view of a joint cutting assembly and a surgical tool engaged with the sacroiliac joint and the iliac wing according to an embodiment of the present invention inserted into an SI joint.

FIG. **96** is an oblique posterior view of an SI joint with a surgical tool and a fixation pin assembly engaged with the sacroiliac joint and the iliac wing according to an embodiment of the present invention.

FIG. **97** is an enlarged oblique posterior view displaying a fixation pin assembly and a surgical tool engaged with the sacroiliac joint and the iliac wing according to an embodiment of the present invention.

FIG. **98** is an oblique posterior view of a surgical tool with the guide pins engaged with the sacroiliac joint and the iliac wing according to an embodiment of the present invention inserted into an SI joint.

FIG. **99** is an enlarged, superior view of a surgical tool with the guide pins engaged with the sacroiliac joint and the iliac wing according to an embodiment of the present invention.

FIG. **100** is a superior view of guide pin placements according to an embodiment of the present invention.

FIG. **101** is an enlarged superior view of guide pin placements according to an embodiment of the present invention.

FIG. **102** is an enlarged, posterior view of guide pin placements according to an embodiment of the present invention.

FIG. **103** is an anterior view of a surgical tool according to an embodiment of the present invention inserted into an SI joint with guide pins for guiding fusion implant placement.

FIG. **104** is a superior view of a surgical tool according to an embodiment of the present invention engaged into an SI joint with guide pins for guiding fusion implant placement.

FIG. **105** is an oblique posterior view of a surgical tool according to an embodiment of the present invention engaged with an SI joint and the iliac wing with drill bits present in working channels of the surgical tool.

FIG. **106** is an enlarged oblique posterior view of a surgical tool according to an embodiment of the present invention engaged with an SI joint and the iliac wing with drill bits present in working channels of the surgical tool.

FIG. **107** is an oblique posterior view of a surgical tool according to an embodiment of the present invention engaged with an SI joint and the iliac wing with a box chisel inserted into a working channel of the surgical tool.

FIG. **108** is an enlarged oblique posterior view of a box chisel inserted into an SI joint, with a working channel removed from view for clarity.

FIG. **109** is an oblique posterior view of a surgical tool according to an embodiment of the present invention engaged with an SI joint and the iliac wing with a rasp inserted into a working channel of the surgical tool.

FIG. **110** is an enlarged oblique posterior view of a rasp inserted into an SI joint, with a working channel removed from view for clarity.

FIG. **111** is an oblique posterior view of a surgical tool according to an embodiment of the present invention engaged with an SI joint and the iliac wing with an impactor inserted into a working channel of the surgical tool.

FIG. **112** is an enlarged oblique posterior view of an impactor inserted into an SI joint, with a working channel removed from view for clarity.

FIG. **113** is an oblique posterior view of a surgical tool according to an embodiment of the present invention inserted into an SI joint with a fusion implant inserter placed in a working channel of the surgical tool.

FIG. **114** is an oblique posterior view of a surgical tool according to an embodiment of the present invention inserted into an SI joint with an impactor inserted into a working channel of the surgical tool.

FIG. **115** is an enlarged, oblique view of a fusion implant and a fixation implant in place in the sacroiliac joint and the iliac wing and sacrum, respectively, where the fixation implant does not pass through the sacroiliac joint.

FIG. **116** is an enlarged, superior view of a fusion implant and a fixation implant in place in the sacroiliac joint and the iliac wing and sacrum, respectively.

FIG. **117** is a posterior view of a pelvis with a surgical tool according to an embodiment of the present invention inserted into an SI joint.

FIG. **118** is a posterior view of a pelvis with a surgical tool according to an embodiment of the present invention with two independent working channels, one inserted into an SI joint and one positioned over an iliac crest.

FIG. **119** is a posterior view of a pelvis with a surgical tool according to an embodiment of the present invention with two independent working channels attached by an adjustable rack.

FIG. **120** is a posterior view of a pelvis with a surgical tool according to an embodiment of the present invention with two parallel barrels.

FIG. **121** is an enlarged posterior view showing two fusion implants inserted in an SI joint.

FIG. **122** is a posterior view of a pelvis with a surgical tool according to an embodiment of the present invention with two independent working channels, one inserted into an SI joint and one inserted over an iliac crest. The working channel inserted into the SI joint may have two barrels for the placement of two fusion devices in the SI joint.

FIG. **123** is an enlarged posterior view showing two fusion devices inserted in an SI joint and one fixation device in the ilium.

FIG. **124** is a superior view showing two fusion devices inserted in an SI joint and one fixation device in the ilium.

FIG. **125** is a posterior view of a pelvis with two surgical tools according to an embodiment of the present invention with a bilateral placement of the two surgical tools for the placement of bilateral implants.

FIG. **126** shows a perspective view of a fusion implant, according to an embodiment of the present invention.

FIG. **127** shows a side view of a fusion implant, according to an embodiment of the present invention.

FIG. **128** shows a cross-sectional view of a fusion implant, according to an embodiment of the present invention.

DETAILED DESCRIPTION

Reference will now be made in detail to certain embodiments of the invention, examples of which are illustrated in the accompanying drawings. While the invention will be described in reference to these figures and certain implementations and examples of the embodiments, it will be understood that such implementations and examples are not intended to limit the invention. To the contrary, the invention is intended to cover alternatives, modifications, and equivalents that are included within the spirit and scope of the invention as defined by the claims. In the following disclosure, specific details are given to provide a thorough understanding of the invention. References to various features of the "present invention" throughout this document do not mean that all claimed embodiments or methods must include the referenced features. It will be apparent to one skilled in the art that the present invention may be practiced without these specific details or features.

Reference will be made to the exemplary illustrations in the accompanying drawings, and like reference characters may be used to designate like or corresponding parts throughout the several views of the drawings.

The present invention relates to novel fusion implants and surgical tools designed for repairing a damaged or injured sacroiliac joint in a human patient, and methods for using such fusion implants and tools in procedures for repairing the damaged or injured sacroiliac joint. More specifically, the present invention pertains to a method for compressing, fixing, and fusing a damaged sacroiliac joint using a fusion implant having fixation element(s) (e.g., integrally formed fixation elements) and a channel or cavity for holding bone growth-promoting materials that provides for mechanical stability and promotes the formation of a contiguous piece of bone from the sacrum to the ilium. The fusion implants may be applied to the SI joint through a novel surgical tool (e.g., an exposure device) without the need for additional patient positioning or secondary surgery.

With respect to some embodiments, an approach is described to address the SI joint through a posterior approach while delivering a fusion implant device that may both compress and fix the SI joint and deliver bone growth-promoting material (e.g., autologous bone, allograft, BMP, etc.). The fusion implant may be delivered to the joint, placed between the sacrum and ilium, and one or more fixation elements (e.g., integral fixation elements) of the fusion implant may be engaged with bone tissue in the articular surfaces of the sacrum and ilium of the patient to thereby compress and fix the SI joint. In some embodiments, an additional fixation device may be delivered through the iliac wing and into the sacrum to assist in mechanically fixing the ilium and sacrum together, without the fixation device entering or traversing the SI joint.

An exemplary exposure device may include a working channel for guiding various surgical tools during a minimally invasive SI joint repair procedure. The surgical tool may allow the insertion of a fusion implant into the SI joint through the working channel in the surgical tool and guide the placement of the fusion implant into the SI joint. The tool enables a minimally invasive surgical method for repairing an SI joint that results in a secure, consistent, and reliable fusion of the SI joint. The surgical tool enables the insertion of the fusion implant into the SI joint while avoiding damage to the soft and connective tissues in and around the SI joint by closely controlling the placement of the fusion implant. The surgical tool may have a barrel or cannula through which the fusion implant is passed into the SI joint that has an interior perimeter shape that is complementary to and/or accommodative of the perimeter shape of the fusion implant. For example, and without limitation, the fusion implant may have lateral fixation elements (e.g., flukes or blades) for engaging with bone tissue in the articular surfaces of the sacrum and/or ilium within the sacroiliac joint, and the interior of the cannula or barrel may have an oblong or elliptical cross-sectional shape or lateral slots such that the lateral fixation elements of the fusion implant can be passed through the barrel or cannula without obstruction. The matching of the perimeter shapes of the interior of the barrel and the fusion implant may also allow the fusion implant to be properly oriented for placement in the SI joint. In some examples, and without limitation, the interior of the barrel may also include longitudinal notches that may be engaged with tabs or protrusions on the fusion implant in order to maintain proper orientation of the fusion implant within the barrel.

In some embodiments, the exposure device may include an additional working channel that is placed laterally to the SI working channel and over the iliac wing. The additional working channel may allow for the insertion of a fixation device (e.g., surgical screw) into the ilium and sacrum to aid in mechanically securing the SI joint. The additional channel may enable the insertion of a joint fixation device (e.g., a screw or other stabilizing device) into the ilium and sacrum such that the additional joint fixation device does not enter or traverse (pass through) the SI joint, thereby further avoiding damage to connective tissue of the SI joint.

Relevant Anatomy Description

Referring to the drawings, FIG. **1** displays the bony anatomy of the sacrum and pelvis in a frontal, or anterior, view. The SI joint **102** is located between the ilium, or iliac wing, **100** and the sacrum **101** at the base of the pelvis **201**. Additionally, the ridgeline of the articular process, the lateral ala **203** and the pedicle **104** of vertebrae S1 can be observed in this view. In FIG. **2**, it can be seen that the SI joint **102** is not fully exposed for direct visualization from a rear, or posterior, viewpoint due to the angled and raised iliac crest **200** of the iliac wing **100**. This angle provides a landmark for the entry point of the exposure device of the present invention at the posterior iliac crest. In FIG. **3** and FIG. **4**, the prominence of the iliac crest **200** is displayed, along with the large surface area of the iliac wing **100**, while the SI joint is

fully enclosed between the iliac wing **100** and the sacrum **101** and occluded for direct visualization by the iliac wing **100**. Again, the landmark of the posterior iliac crest can be seen. From a top down view, or superior view, the sacroiliac joint **102** can be fully observed between the iliac wing **100** and the sacrum **101**, as shown in FIG. **5**. Also shown in FIG. **5**, the full sacrum **101** and specifically the vertebral body **103** of S1. The posterior superior iliac crest and the entry point of the S1 pedicle **104** can be observed in a direct line from one another (see also FIGS. **110-111**).

In FIG. **6**, it can be again observed that the SI joint is occluded from direct visualization due to the anatomy of the sacrum **101**, the ilium **100** and the pelvis **201**. Therefore, the only direct visualization of the SI joint can be achieved through an anterior, superior or posterior-oblique view of the sacrum and pelvis. Due to major organs being present in the pelvic-sacral cavity (colon, rectum, bladder, etc.), an anterior or superior approach to the bony anatomy and, specifically the SI joint, presents an unreasonable risk. Lateral approaches can be performed as described in Published U.S. Pat. No. 5,334,205 to Cain, entitled "Sacroiliac Joint Fixation Guide," incorporated herein by reference and Published U.S. Pat. No. 8,221,428 to Trieu, entitled "Sacro-iliac joint implant system, method and instrument," incorporated herein by reference. However, these techniques rely on non-direct confirmation methods such as navigation and fluoroscopy to determine accurate landmark and sacroiliac joint locations.

The present invention provides for novel surgical techniques and novel fusion implant and instrument designs which allow for a direct visualization of the SI joint by utilizing a posterior-oblique access method to the anatomy as displayed in the oblique view of FIG. **7**. In this drawing, the SI joint **102** can be clearly viewed between the right ilium **100** and sacrum **101**. A corresponding joint may be exposed through the same approach on the left hand side. Additionally, the anatomical landmark of the right posterior iliac crest and the corresponding access to the S1 pedicle **104** can be seen through this approach.

Instruments

The present invention utilizes a novel exposure device and a surgical tool kit that may be used in a novel surgical method to introduce and secure a fusion implant in a patient's SI joint. The present invention also relates to novel fusion implants that may be implanted into the SI joint, for example, by the novel surgical tools and methods of the present invention. Exemplary tools are described herein.

The novel exposure device may be a surgical guiding tool having a working channel therein for guiding other surgical tools for use in repairing an SI joint.

FIGS. **27-32**B, show exemplary exposure devices **137** and **137***a* for accessing a sacroiliac joint is shown, having a working channel **239** that may be engaged with a posterior side of the sacroiliac joint. The working channels of the exposure devices may have a hollow barrel therein for passing various surgical tools that may have a shape corresponding to (complementary to) the hollow barrel. The working channel may provide a guide for inserting the various surgical tools into the SI joint, allowing precise surgical incisions, insertions of the fusion implant, etc. The barrel of the working channel may have an interior perimeter shape that is complementary to and/or accommodative of the perimeter shape of a fusion implant may be passed into the SI joint. The matching of the perimeter shapes of the interior of the barrel and the fusion implant may allow the fusion implant to be properly oriented for placement in the SI joint. For example, and without limitation, the exemplary exposure device **137** has a barrel having a substantially circular interior cross-section that may accommodate fusion implants that have circular cross-section (e.g., a helical implant) or a cross-section having a greatest diameter that is less than the diameter of the interior cross-section of the barrel.

In a further example, and without limitation, the barrel exposure device **137***a* may have an oblong or elliptical interior cross-section **190***a*, where the elongated portions of the barrel (e.g., the portions of the interior cross-section of the barrel that near the end of the major axis of the elliptical shape) act as channels through which lateral extensions of a fusion implant (e.g., a fusion implant having flukes or blades) may pass without obstruction. The interior of the barrel may have other shapes as well. For example, and without limitation, the interior perimeter of the barrel may have two lateral slots spaced at about 180° from one another in order to accommodate two lateral flukes, hooks, or blades extending from a body of an SI fusion implant. The working channel **239** may also have one or more pin guide slots **139** on one or more sides thereof for insertion of fixing pins to immobilize the exposure device **137** or **137***a* when it is engaged with the SI joint. In other implementations, and without limitation, a stabilizing arm (e.g., a retractor arm—not shown) may be engaged with a handle **140** and/or slot **141** in the handle in order hold the exposure device in a static and stable position.

The working channel **239** may have one or more windows **138** in the sides of the hollow barrel allowing the progress of a tool inserted therein to be observed through the one or more windows. For example, a surgical implement (e.g., a dilator) inserted into the hollow barrel of working channel **239** may have notches and/or unit markings on a side thereof that are visible through the one or more windows **138**, allowing the progress and depth of the surgical implement to be precisely known. The windows **138** may also allow access to the surgical implements inserted into the working channel. If a surgical implement becomes difficult to remove during a surgical procedure due to the presence of fluid in the hollow barrel of the working channel (e.g., creating suction), appropriate tools can be used to access the surgical instrument through the window(s) **138** to aid in the removal of the surgical implement.

Referring to FIG. **29**, the hollow barrel of the working channel **239** may have a slot **146** (e.g., a timing feature) that arrests the progress of a surgical implement inserted into the hollow barrel of the channel. The slot **146** prevents the surgical implement from advance too far into the SI joint or the ilium and sacrum, thereby preventing damage to the tissue of the patient. The surgical implements used in connection with the exposure device **137** may have a protrusion that is complementary to the slot **146**, such that the slot is effective in controlling a depth to which the surgical implement can be inserted. The slot **146** also may ensure that such surgical implements having a complementary protrusion are and remain properly oriented in the hollow barrel of the working channel, with no axial movement, during the surgical procedure.

The hollow barrel of the working channel may also have guiding slots therein for properly aligning instruments (e.g., a fusion implant inserter, an impactor, etc.) and/or fusion implants for passage through the hollow barrel. The guiding slots may engage notches or protrusions on the instruments or implants such that the notches or protrusions slide along the guiding slots as the instrument or fusion implant is advanced through the hollow barrel. For example, and without limitation, guiding slots **146***a* are shown in the

hollow barrel of exposure device **137***a* in FIG. **31**. The guiding slots **146***a* are located at 180° relative to one another in the hollow barrel, but the invention is not limited to such an arrangement. Various implementations of the exposure device of the present invention may have one or more guiding slots (e.g., 1, 2, 3, etc.) and they may be arranged in various spatial arrangements within the hollow barrel.

The insertable end **142** of the working channel **239** may have a rounded circular or oblong geometry that prevents or reduces damage to the soft and connective tissues in and around the posterior side of the SI joint. Guide channels having other shapes (e.g., rectangular or square) may damage soft tissues around the SI joint when the guide channel is inserted therein. The round geometry of the insertable end **142** favorably reduces or prevents such damage. The round or circular insertable end **142** may also have a tapered or rounded profile, which may further aid in reducing or preventing damage to the soft and connective tissues around the SI joint. It is to be appreciated that the present invention is not limited to working channels having round, circular, or rounded ends. The working channels may have other perimeter shapes circular, oval, triangular, polygonal (pentagonal, hexagonal, etc.), Reuleaux shapes, and other applicable shapes.

The insertable end of the working channel may also include one or more prongs or tangs that extend beyond the end of the hollow barrel. The one or more prongs or tangs may allow the working channel to be more easily centered in the SI joint (e.g., with the tangs aligned along the plane between the articular surfaces of the SI joint), and may also serve to help stabilize the position of the working channel in the SI joint. For example, and without limitation, FIGS. **30**, **32**A, and **32**B show embodiments of an exposure device that includes tangs **180***a* and **180***b* extending from the distal, insertable end of exposure devices **137***b* and **137***b*. The tangs **180***a* and **180***b* are positioned 180° relative to one another on the end of the hollow barrel, but the invention is not limited to such an arrangement. In some embodiments (e.g., an embodiment exemplified by **137***b* shown in FIG. **32**A), and without limitation, the tangs **180***a* and **180***b* may be included at the ends of the major axis of the oblong (e.g., elliptical) end of the working channel, which may be used with an implant having lateral fixation elements such as flukes that may be rotated into the bone tissue after being placed in the SI joint. In other embodiments (e.g., an embodiment exemplified by **137***c* shown in FIG. **32**B), and without limitation, the tangs **180***a* and **180***b* may be included at the ends of the minor axis of the oblong (e.g., elliptical) end of the working channel, which may be used with an implant having lateral fixation elements such as lateral plates that may be inserted direct into the bone tissue of the SI joint.

The working channel may have other additional features such as handles **140** and slots **141** therein (e.g., for inserting handle extensions, etc.), as well. Additionally, the handle **140** may also be attachable to a stabilizing structure (e.g., a table or surgical arm, retractor/stabilizing arms, etc.) to prevent movement of the exposure device or surgical implements engaged therewith during surgical procedure. It is to be appreciated that the above description of the exposure tool does not limit the present invention, and other features are contemplated in and within the scope of the present invention.

In some embodiments the invention may comprise a double-barreled working channel having side by side (e.g., parallel) hollow barrels, each able to receive and guide surgical implements. The two barrels may have a same or different length. In reference to FIG. **120**, a double-barreled working channel **295** may have first and second parallel barrels. Working channel **295** may allow multiple fusion implants to be inserted into an SI joint. In such embodiments, the additional working channel of the double-barreled working channel may have similar features as described above with respect to the working channel **239**.

In some embodiments of the present invention, and without limitation, the exposure device may be a surgical guiding tool having two working channels therein for guiding other surgical tools for use in repairing an SI joint. The two working channels may be attached to one another by a connecting member, such as a bar or a rack. The bar may have a bend or angle therein that positions the two working channels at an angle (with respect to their longitudinal axes) relative to one another in a range of 0° to 180°. In some embodiments, the angle between the two working channels may be acute (e.g., about 30° to about 50°, or any angle in that range, such as about 45°). The angled positions of the two working channels allows one working channel to be positioned over the SI joint and the second working channel to be positioned over the ilium (e.g., the iliac wing) simultaneously and snugly, enabling the insertion of one more joint fusion implants into the SI joint and a joint fixation device (e.g., a bone screw) into the ilium and sacrum in a single procedure with a simple tool, without the need to reposition the surgical tool to insert either the joint fusion implants or the fixation device. In further embodiments, the relative angle of orientation of the two working channels may be a right angle or may be obtuse, depending on the desired insertion point on the ilium. If a different entry point for a joint fusion device is desired, the relative orientation angle of the two working channels may be in a range of about 45° to about 180° (e.g., about 90° to about 180°, about 45° to about 135°, about 90° to about 120°, or any value or range of values therein). For example, if the desired entry point on the ilium is more lateral or anterior, the angle of orientation between the two working channels may be 90° or greater.

Referring to FIGS. **33**-**37**, a dual working channel exposure device **300** is shown having a connecting bar **337** connecting a first working channel **339** and a second working channel **350**. The connecting bar **337** may have a bend or angle **343** between the first and second working channels **339** and **350**. In some implementations, and without limiting the invention, the bend **343** may have an obtuse angle in a range of about 110° to about 160° (e.g., about 135° or any value therein). In some implementations, and without limiting the invention, the bend **343** may result in the first and second working channels being positioned at an acute angle relative to one another that may be complementary to the obtuse angle of the bend **343**. In alternative implementations, and without limitation, the connecting bar may have a lockable joint therein between the first and second working channels **339** and **350** that may be adjusted to have an angle in a of about 90° to about 180° (e.g., about 135° or any value therein). The angle of the connecting bar **343** is configured to accommodate the contour of the pelvis between the ilium and the SI joint such that the first working channel **339** can be engaged with a posterior side of the sacroiliac joint and the second working channel **350** can be engaged with a posterior portion of the ilium simultaneously.

The connecting bar **337** may also have a second angle therein, as shown in the top perspective of FIG. **35** and the bottom perspective of FIG. **36**. The first and second working channels **339** and **350** may be position at an angle between about 5° and about 40° (e.g., about 15°, or any angle therein). To further illustrate, the bar **343** may be angled

such that the longitudinal axes of the first and second working channels **339** and **350** may run along different, but parallel planes. Thus, the working channels **339** and **350** are positioned at an acute angle relative to one another from a side perspective (e.g., FIG. **34**), and on parallel planes relative to each other from top or bottom perspective (e.g., FIGS. **35** and **36**). The additional angle in the connecting bar **343** may aid in positioning the second working channel **350** on the ilium when the first working channel is engaged with the SI joint, such that the second working channel **350** is positioned over the iliac wing, close to the iliac crest. The position and angle of the second working channel **350** may allow the insertion of a bone fusion device (e.g., a bone screw) through the ilium and the sacrum (e.g., the S1 vertebrae) through the hollow barrel of the second working channel **350**, such that the bone fusion device does not traverse the SI joint (e.g., it is inserted anteriorly to the SI joint).

Each working channel may have a hollow barrel therein for passing various surgical tools that have a shape corresponding to (e.g., complementary to) the hollow barrel. The working channels provide a guide for inserting the various surgical tools into the SI joint and the ilium, allowing precise surgical incisions, insertions of fusion implants, bone-growth promoting material, etc. The working channel position over the SI joint may have a hollow barrel having an oblong or elliptical internal cross-section or other shape for accommodating fusion implants having one or more lateral fixation elements, as discussed above. Each of the first and second working channels **339** and **350** may have one or more pin guide slots **349** on a side thereof for insertion of fixing pins to immobilize the exposure device **300** when it is engaged with the SI joint and the ilium. The first and second working channels may also each have one or more windows **338** in sides of the hollow barrels allowing the progress of a tool inserted therein to be observed through the one or more windows, and allow access to instruments in the working channels through the windows, similarly to window **138** described above.

Referring to FIG. **37**, the hollow barrels of the first and second working channels **339** and **350** may have a slot **346** (e.g., a timing feature) that arrests the progress of a surgical implement inserted into the hollow barrel of the channel. The slot **346** may prevent the surgical implement from advance too far into the SI joint or the ilium and sacrum and may ensure that surgical tools passed through the hollow barrels remain properly oriented, with no axial movement, thereby preventing damage to the tissue of the patient. The surgical implements used in connection with the dual working channel surgical tool may have a protrusion that is complementary to the slot **346**, such that the slot is effective in controlling a depth to which the surgical implement can be inserted.

The insertable end **342** of the first working channel **339** may have a round or circular geometry that prevents or reduces damage to the soft and connective tissues in and around the posterior side of the SI joint. The round or circular insertable end **342** may also have a tapered or rounded profile, which may aid in reducing or preventing damage to the soft and connective tissues around the SI joint. The second working channel **350** may also have circular and/or rounded or tapered insertable end **342**, as well. It is to be appreciated that the present invention is not limited to working channels having round, circular, oblong or otherwise rounded ends. The insertable end of the working channel **339** may also include one or more prongs or tangs that extend beyond the end of the hollow barrel, as discussed above. The one or more prongs or tangs may allow the working channel to be more easily centered in the SI joint (e.g., with the tangs aligned along the plane between the articular surfaces of the SI joint), and may also serve to help stabilize the position of the working channel in the SI joint.

The first and second working channels may have other additional features such as handles **340** and slots **341** therein (e.g., for inserting handle extensions), as well. It is to be appreciated that the above description of the surgical tool does not limit the present invention, and other features are contemplated in the present invention.

In some embodiments the invention may comprise one or more separate working channels that may be used in a similar manner to the dual working channel exposure device. In reference to FIG. **119**, the invention may include first and second working channels **290**, which can be individually positioned, for example, with one inserted into the posterior of the SI joint, and another positioned over the iliac wing. In such embodiments, the individual working channels may have the same features described above with respect to the dual working channel exposure devices described herein, except for the connecting bar **343** and the features particular thereto.

In some embodiments, the invention may include a kit or set of surgical implements and one or more joint fusion implants and joint fixation devices (e.g., surgical screws) that are associated with one or more of the exposure devices described above. Various tools may be included in such a set, including a joint cutting instrument (e.g., dilator), guide pins, guide pin assemblies, a drill, drill bits, a rasp, a box chisel, an inserter, and an impactor. Each of such tools may correspond to the exposure devices described herein. For example, the joint cutting instrument, the drill bits, the rasp, the box chisel, the inserter, and the impactor each may have a shape that is complementary to a hollow barrel of the exposure device, allowing each instrument to be inserted into the hollow barrel flush and in the proper orientation, without room to deviate from the path of the barrel. Thus, the working channel of the exposure device may act as precise guides for the surgical implements described above.

These surgical implements may be made of any suitable material, including medical grade plastics, metals, or alloys. In some embodiments, and without limitation, the tools are single use, in other embodiments the tools may be reused (and autoclaved, cleaned or otherwise suitably disinfected for further use). The tools may have various configurations, including those that differ from those depicted and specifically described herein.

The implements may include a joint probe capable of being used to locate an insertion point in an SI joint for a fusion implant. The joint probe may have a hollow channel therethrough for inserting a guide wire into the SI joint once the joint probe is properly positioned in the insertion point. Referring to FIGS. **8-11**, the joint probe may have a rounded tip **111** for locating the insertion point, a shaft **112**, and a handle **110**. A hollow channel **113** run through the length of the joint probe to allow a guide wire to be inserted therethrough and into the SI joint.

The set of tools may also include guide pins for securing the exposure device to the SI joint and the ilium. Referring to FIGS. **11-12**, the guide pin **115** may have shaft that corresponds to the central channel of the joint probe and may be inserted into the SI joint through the dilator, to guide tools and implements subsequently positioned in said SI joint.

The set of surgical implements may include a dilator, which may be any device or structure capable of dilating an

incision made in a human or other animal. FIGS. **13-19** illustrate an example of a dilator system that may be included in the present invention. Dilator **116** may be made of any suitable material and may have any suitable dimensions and configuration. In the depicted example, dilator **116** has a distal end **117**, a proximal end **118**, and a shaft therebetween. Proximal end **118** may have any configuration suitable to dilate an opening or incision, for example an incision made by a pin or wire in the patient's flesh and dilate that incision to increase its size. The proximal end **118** may be tapered, coming to a point at its end. The distal end **117** may be faceted, allowing it to be engaged with a grooved end **120** of a T-handle **119**. A dilator assembly, an example of which is shown in FIGS. **18** and **19**, allows the dilator to be spun or otherwise manipulated to adjust the size of an incision. The dilator **116** (and the t-handle **119**) may have a central channel **213** running down its length that may allow a guide wire or pin to be inserted therethrough into the incision.

Fixing pins **126** and a fixing pin handle **125**, as shown in FIGS. **22-23**, may be included in the set of tools that correspond to the pin guide slots **139** on sides of the working channels of the exposure devices. The guide pins may also have a sharp and/or threaded end **115** for piercing bone and other tissues. The fixing pins may correspond to the pin guide holes on sides of the working channels (e.g., pin holes **139**, and **349**) of the exposure devices described above. The fixing pins can be used to secure the working channels in a desired position over the SI joint or the ilium.

A drill **122**, as shown in FIGS. **20-21**, may be included in the set to allow for bone preparation for fusion implant insertion. The drill may have a thread portion **124** with numerous designs in order to provide a hole with the desired female thread cut in the desired anatomy. The drill may also be designed to be attached to power instruments, a hand drill or a handle. Without limiting the invention, FIG. **20** an exemplary drill having a Jacob's chuck connection **123** so that it may be attached to a powered drill for quick preparation. Additionally, the drill may have a central channel **124** running down its length that may allow a guide wire or pin **114** to be inserted there through into the incision as seen in FIG. **21**.

A chisel **131**, as shown in FIG. **24**, may be included in the set to provide an opening in the bone with desired dimensions on its distal tip **134** to better facilitate entry for the fusion implant. The distal tip **134** may have a tapered nose in order to self-distract its way in between the sacrum and ilium. The distal tip **134** may also have cutting edges to dig into the bone and remove it from the surgical site. The chisel may be used to penetrate the cortical tissue of the sacrum and ilium to allow anchoring portions of the joint fusion implants of the present invention to penetrate the bone tissue and thereby anchor the fusion implant in the joint. The distal tip **134** may also have a containment device for removal of surgical site bone and windows may exist in the containment device to collect bone debris and remove the bone debris after removal from surgical site. The distal tip **134** may be undersized to a fusion implant to be inserted in order to ensure full bony contact on all sides of the fusion site. The chisel may have an outer diameter, as seen in FIG. **24**, that matches the inner diameter of a working channel (e.g., working channels **239**, **339**, and **350**) to keep the chisel directed in an axial plane for desired implant preparation. The chisel may have a timing feature **133** that mates with a female timing feature (e.g., timing feature **146** or **346**) on the inside of a working channel to keep the chisel from plunging too far into the surgical site and to further keep the chisel in the proper orientation for desired implant site preparation.

Additionally, a rasp **132**, as shown in FIG. **25**, may be included in the set to provide an opening in the bone with desired dimensions on its distal tip **135** to better prepare the bone for a fusion site for the fusion implant. The distal tip **135** may have a tapered nose in order to self-distract its way in between the sacrum and ilium. The distal tip **135** may have aggressive teeth which can scrape the bone to help prepare the bone surface for receiving anchoring portions of joint fusion implants of the present invention. The rasp may have an outer diameter as seen in FIG. **25**, that matches the inner diameter of a working channel (e.g., working channels **239**, **339**, and **350**) to keep the rasp directed in an axial plane for desired implant preparation. The rasp may have a timing feature **133** that mates with a female timing feature (e.g., timing feature **146** or **346**) on the inside of a working channel to keep the instrument from traveling too far into the surgical site and to further keep the instrument in the proper orientation for desired implant site preparation.

One or more impactors, such as impactor **136** shown in FIG. **26**, may be included in the surgical implements, as well. The impactor may have a cylindrical proximal end, like a hammer. The impactor may be included in the set to facilitate secondary impaction and movement of a fusion implant and, optionally, to advance bone-fusion promoting materials in the SI joint in front of and/or behind the implant to better prepare the surgical site and to promote fusion of the SI joint. The impactor may have an outer diameter, as seen in FIG. **26**, that matches the inner diameter of a working channel (e.g., working channels **239**, **339**, and **350**) to keep the instrument directed in an axial plane for desired surgical site preparation.

Inserters for fusion devices may be included in the set to facilitate delivery of implants or grafts into the sacroiliac joint and into the ilium and sacrum. Without limiting the invention, FIG. **38** shows an exemplary fusion inserter **147** can be used to deliver a fusion implant of desired materials such as PEEK, metal or biologic material into the surgical site. As seen in FIG. **38**, the inserter may have a thumbwheel **148** that is attached to a spring element **150**. When thumbwheel **148** is tightened, spring element **150** may be tightened down onto an fusion implant to keep the implant from disengaging from the inserter during implantation. Fork arms **149** may enter recesses on a proximal end of the fusion implant to keep the implant from losing its desired orientation during insertion. Upon desired placement of the fusion implant, thumbwheel **148** may be loosened and the spring element **150** detaches from the implant, leaving the implant in the desired position. Without limiting the invention, FIG. **39** shows an inserter **147** engaged with an exemplary fusion implant **151**. In this example, and without limitation, the implant **151** has notices on the lateral sides thereof that may be engaged by the fork arms of inserter **147**.

The inserter **147** may have an outer diameter as seen in FIG. **38**, that matches the inner diameter of a working channel (e.g., working channels **239**, **339**, and **350**) to keep the inserter directed in an axial plane for desired implant preparation. The inserter may have a timing feature **150** that mates with a female timing feature (e.g., timing feature **146** or **346**) on the inside of a working channel (e.g., working channels **239**, **339**, and **350**) to keep the instrument from traveling too far into the surgical site and to further keep the instrument in the proper orientation for desired implant site preparation.

Instrument kit of the present invention may additionally include a driver (e.g., a manual or electrically powered

driver, etc.) for inserting joint fixation devices, such as surgical screws, into bone tissue in the articular surfaces of the SI joint and/or into the bone tissue of the ilium and sacrum without the fusion device traversing the SI joint. For example, a bone screw **158** (e.g., a compression screw) may passed through a working channel positioned over an iliac wing and driven through the ilium and sacrum with fixation device driver **125**. In other examples, surgical screws **603** and **604** shown in FIGS. **59-61** may be inserted through a working channel over the SI joint and passed into fusion implant **600** at an oblique angle by a special driver having a universal joint or a flexshaft (not shown) that is operable drive the screws into the articular surfaces of the sacrum and ilium at oblique angles in order to secure the fusion implant **600** in the SI joint.

The surgical kits of the present invention may also include one or more of the joint fusion implants disclosed herein, and a particular kit may include an exposure device having an internal cross-section that corresponds to a shape of the one or more joint fusion implants that are included in the kit. The surgical kits may also include one or more joint fixation devices (e.g., surgical screws) for fixing the ilium and sacrum together.

It is to be appreciated that additional surgical tools or implements may be used with the present working channels, and that the invention is not limited to use of the implements described in this section.

Fusion Implants

The present invention also relates to fusion implants that include fixation element(s) that mechanically secure and compress the SI joint, and deliver bone-growth promoting material into the SI joint to facilitate the formation of a contiguous piece of bone from the sacrum to the ilium. The fusion implants of the present invention may be applied to the sacroiliac joint through the novel exposure devices described herein. The novel posterior exposure devices and the combined fixation and stability, compression, and fusion functionalities of the fusion implants of the present invention may allow for posterior approach that may eliminate the need for patient repositioning or further incisions, resulting in less surgery time, less morbidity, and improved recovery time for the patient. Thus, the surgical methods and fusion implants of the present invention allow for a minimally invasive methodology.

To create fixation, stability, and compression from a posterior implant in the sacroiliac joint, the fusion implants of the present invention draw together, connect, and hold the articular surfaces of both the sacrum and ilium together, while stimulating a fusion of the articular surfaces. The joint fusion device may create stress and pressure on the bone tissue by mechanically drawing the bones together, and may thereby utilize bone remodeling (e.g., as according to Wolff's Law) to promote stable and robust bone fusion in the targeted joint. The various embodiments of the fusion implants of the present invention all contain mechanisms that connect both the sacrum and the ilium independently, while using a body thereof to bridge across the two bones for a fusion site. Each of the various embodiments of the fusion implant may include a channel or cavity that may be used to hold bone-growth stimulating materials in the form of autologous bone, allograft, BMP, etc.

In some embodiments of the fusion implant, and without limitation, the fusion implant may have one or more helical anchors for insertion into bone tissue. In such embodiments, the fusion implant may also include a channel or cavity for holding bone growth-enhancing material for promoting fusion of adjacent bones held together by the fusion implant. For example, and without limitation, a fusion implant may include a single helix or multiple helices (e.g., **2** or **3** helices) that may be concentric and/or interwoven. In some embodiments, and without limitation, the helical path of the helical fixation anchors may have a uniform diameter from their proximal end to the distal end thereof. However, in other embodiments, and without limitation, the helical path of the helical fixation anchors may taper outward or inward from the proximal end to the distal end of the helical path to create a conical shape to the helical path.

Without limiting the invention, FIGS. **49-51** show an exemplary fusion implant **400** having two helical anchors. The implant **400** has a body **401** attached to two helical anchors **403** and **404**, which may be concentric and interwoven. Each of the helical anchors **403** and **404** may have a distal cutting edge **405** that may be operable to penetrate bone tissue in joint targeted for fusion. The distal cutting edges of each of the helical anchors **403** and **404** may be on opposite sides of the fusion implant **400** such that as the implant is advanced into the SI joint, the helical anchor **403** engages the ilium and helical anchor **404** engages the sacrum. The body **401** of the fusion implant **400** may have notches or slots **402** in a perimeter thereof that may be engaged by a fusion implant inserter or driver as described herein (e.g., by fork arms **149**). The implant **400** may have a outer diameter in a range of about 8 mm to about 20 mm (e.g., about 12 mm to about 18 mm, or any other value or range of values therein). The implant may be paired with a exposure device having a hollow barrel with an internal cross-section that corresponds to the diameter and cross-sectional shape of the implant.

In other embodiments, and without limitation, the fusion implant may have a single helix attached to the body of the fusion implant. For example, and without limitation, FIGS. **52-54** illustrate an exemplary fusion implant **400***a* that may include a single helical anchor **403***a*. The fusion implant **400***a* has a body **401***a* attached to the helical anchor **403***a*, which may have a distal cutting edge **405***a* that may be operable to penetrate bone tissue in joint targeted for fusion. After being inserted into the SI joint the body **401***a* may be rotated in a range of about 180° to about 360° (e.g. about 270°, or any value or range of values therein) such that helical anchor **403***a* may engage the articular surfaces of both the ilium and the sacrum so that the fusion implant can compress the bones together and stabilize the SI joint. The body **401***a* of the fusion implant **400***a* may have notches or slots **402***a* in a perimeter thereof that may be engaged by a fusion implant inserter or driver as described herein (e.g., by fork arms **149**).

The process of inserting and advancing the fusion implant **400** (or **400***a*, or other related embodiments) may be performed by one or more tools that engage the notches or slots **402** (or **402***a*). An inserter (e.g., inserter **147**) may be used to initially place the fusion implant **400** (or **400***a*, or other related embodiment) in a desired position between the sacrum and ilium, and the inserter may be subsequently rotated to engage the helical anchors with the bone tissue of the articular surfaces of the sacrum and ilium. For example, and without limitation, a driving tool may be attached to the inserter to aid in rotating the inserter. As the fusion implant is rotated, the sacrum and ilium bones may be pulled towards each other and the sacroiliac joint may be compressed and stabilized. Cutting edges **405** may be pierce the bone tissue (e.g., cortical and/or cancellous/spongy bone tissue) of the sacrum and ilium. As shown in FIGS. **49-50**, but without limitation, the cutting edges **405** of the helical anchors **403** and **404** are aligned with the notches **402** for

receiving the inserter tool. This alignment may be included in order to position the cutting edges in a precise position within the joint. For example, the alignment allows the surgeon to control insertion of the cutting edges such that the cutting edge of one of the helical anchors is positioned at the targeted articular surface of the sacrum and the cutting edge of the other helical anchor is positioned at the targeted articular surface of the ilium. In such implementations, the position of the cutting edges can be controlled by the aligning the inserter with the plane of the joint (the plane between the articular surfaces), and thereby placing the cutting edges in close proximity to the targeted articular surfaces such that they engage and penetrate the articular surfaces immediately upon rotation of the inserter. Other embodiments of the fusion implant (e.g., those having a single helical anchor, or flukes, claws, etc.) may also be inserted such that the portion of the fusion implant for engaged with the bone tissue is positioned adjacent to the targeted articular surface when inserted into the joint and prior to rotation of the implant.

In some implementations, and without limitation, surgical tools (e.g., a drill, chisel, rasp, etc.) may be used to remove cortical tissue from the targeted articular surfaces of the sacrum and ilium to prepare ("prep") the articular surfaces for engagement with the fusion implant before the fusion implant is inserted into the joint, allowing the helical anchors of the fusion implant to more easily pierce the bone tissue of the sacrum and ilium. In such implementations, and without limitation, the fusion implant may be inserted into the joint such that the cutting edges of the fusion implant may be aligned with and adjacent to the prepped articular surfaces.

In some implementations, and without limitation, the fusion implant may include a cannulated channel or cavity that allows for the addition of bone growth-stimulating materials into the targeted joint. For example, and without limitation, the fusion implant **400** (or **400***a*, or other related embodiment) may include a cannulated channel (e.g., **406**) running from a central hole in the proximal end of body (e.g., **401**) through the one or more helical anchors (e.g., **403** and **404**) to the distal end(s) of the one or more helical anchors (e.g., **403** and **404**). The cannulated channel may be packed with bone growth-stimulating materials (e.g., autologous bone, allograft, BMP, etc.) to stimulate bone growth across the fusion implant and the joint that may lead to fusion of the sacrum and ilium. Without limiting the invention, the bone growth-stimulating materials may be inserted into the channel through a proximal hole in the body after the fusion implant is set into desired operative position. In other implementations, the bone growth-stimulating materials may be present in the channel prior to insertion of the fusion implant into the SI joint.

As an example, and without limitation, FIG. **50** provides a side view of the fusion implant **400** in which the length of the cannulated channel **406** can be seen running from the proximal hole in the body **401** to the distal ends of the helical anchors **403** and **404**. FIG. **51** provides a bottom view of the implant **400** and shows the complete cannulated channel **406** and the concentric and interwoven pattern of the helical anchors **403** and **404**. However, it should be understood that the present invention is not limited to the particular arrangement of the exemplary helical anchors **403** and **404** in FIGS. **49-51**. For example, and without limitation, FIG. **53** provides a side view of fusion implant **400***a* in which the length of cannulated channel **406***a* can be seen running from a proximal hole in the body **401** to the distal end of the helical anchor **403***a*. FIG. **54** provides a bottom view of fusion implant **400***a* showing the complete cannulated channel **406***a*.

FIG. **55** displays the fusion implant **400** in its desired operative position in the sacroiliac joint **102**, where helical anchors **403** is engaged with the ilium **200** and anchor **404** is engaged with the sacrum **101**. The implant may create stability and fixation across the joint, compression in the joint, and bone growth-promoting material can be added to the cannulated channel **406** to aid in fusion of the sacrum and ilium at the site of the fusion implant. It is to be understood that other related embodiments (e.g., fusion implant **400***a*) may be placed in the joint in the same manner. It is also to be understood that multiple fusion implants may be placed into the sacroiliac joint from the posterior approach. For example, and without limitation, the double-barreled exposure device **295** shown in FIGS. **118-119**, which has two side by side (e.g., parallel) working channels may be used to introduce two fusion implants into the SI joint.

In other embodiments of the fusion implant, and without limitation, the fusion implant may have a central body with flukes, claws, hooks, or other bone engaging structures attached thereto. Additionally, the central body may have a channel or cavity in which bone growth-enhancing materials may be included. Without limiting the invention, FIGS. **56-57** show an exemplary embodiment of a fusion implant **500** having lateral flukes **503** and **504** for engaging with the targeted articular surfaces of the SI joint. Each of the lateral flukes **503** and **504** may have a distal hooking ends **505** that may be operable to penetrate bone tissue in joint targeted for fusion. The distal cutting edges of each of the lateral flukes **503** and **504** may be on opposite sides of the fusion implant **500** such that as the fusion implant is advanced into the SI joint, the lateral fluke **503** engages the ilium and lateral fluke **504** engages the sacrum. The proximal end of the body **501** of the fusion implant **500** may have notches or slots **502** in a perimeter thereof that may be engaged by a fusion implant inserter or driver as described herein (e.g., by fork arms **149**). The notches or slots **502** may allow the inserter to turn the fusion implant **500** (e.g., in a clockwise direction) to allow for the lateral flukes **503** and **504** to pull the sacrum and ilium towards each other, creating compression. The implant **500** may have a minimum (smallest) outer diameter in a range of about 8 mm to about 20 mm (e.g., about 12 mm to about 18 mm, or any other value or range of values therein), and a maximum (largest) outer diameter in a range of about of about 12 mm to about 40 mm (e.g., about 15 mm to about 30 mm, or any other value or range of values therein). The implant may be paired with an exposure device having a hollow barrel with an internal cross-section that corresponds to the outer diameters and cross-sectional shape of the implant.

The fusion implant **500** may include a cannulated channel or cavity **506** that allows for the addition of bone growth-stimulating materials into the targeted joint. For example, and without limitation, the fusion implant **500** includes cannulated channel **506** running from a central hole in the proximal end of body **501** a distal hole **508** in the body **501**. The cannulated channel **506** may be packed with bone growth-stimulating materials (e.g., autologous bone, allograft, BMP, etc.) to stimulate bone growth across the fusion implant and the joint that may lead to fusion of the sacrum and ilium. The body **501** may have a number of fenestrations **507** therein to allow for lateral bone growth through the implant, which may result in a stable fusion site between the sacrum and ilium. Without limiting the inven-

tion, the bone growth-stimulating materials may be inserted into the channel **506** through the proximal hole in the body **501** after the fusion implant **500** is set into desired operative position. In other implementations, the bone growth-stimulating materials may be present in the channel **506** prior to insertion of the fusion implant **500** into the SI joint.

The process of inserting and advancing the fusion implant **500** may be performed by one or more tools that engage the notches or slots **502**. An inserter (e.g., inserter **147**) may be used to initially place the fusion implant **500** in a desired position between the sacrum and ilium. Without limiting the invention, FIG. **54** shows the fusion implant **500** having a self-distracting bullet nose **509**. The bullet nose may have a round geometry and/or a tapered rounded profile that is operable to distract the SI joint with minimal damage to soft and connective tissue in and around the posterior side of the SI joint. The bullet nose **509** may facilitate entry into the sacroiliac joint prior to the lateral flukes **503** and **504** being rotated into place in the sacrum and ilium. The sloped bullet nose **509** and the inserter may be subsequently rotated to engage the lateral flukes **503** and **504** with the bone tissue of the articular surfaces of the sacrum and ilium. As the fusion implant **500** is rotated, the sacrum and ilium bones may be pulled towards each other and the sacroiliac joint may be compressed and stabilized. Hooking ends **505** may pierce the bone tissue (e.g., cortical and/or cancellous/spongy bone tissue) of the sacrum and ilium. As shown in FIGS. **56-57**, but without limitation, the lateral flukes **503** and **504** may be aligned with the notches **502** for receiving the inserter tool. This alignment may be included in order to position the cutting edges in a precise position within the joint (e.g., with the lateral flukes aligned with the plane of the joint between the articular surfaces such that the hooking ends are positioned at the targeted articular surfaces).

As discussed above, and without limiting the invention, the working channel through which the implant is passed into the SI joint may have an oblong cross-sectional shape or slots running along its length for accommodating the lateral flukes of the implant. For example, and without limitation, the channel may have a hollow barrel with slots may be separated by about 180° along the length of the working channel and may have a shape that can accommodate the shape of the lateral flukes (e.g., a generally rectangular shape that is sufficiently large to accommodate the shape of the lateral flukes).

FIG. **58** displays the implant **500** in a desired operative position in the sacroiliac joint **102**, where lateral fluke **503** is engaged with the ilium **200** and lateral fluke **504** is engaged with the sacrum **101**. The implant may create stability and fixation across the joint, compression in the joint, and bone growth-promoting material can be added to the cannulated channel **506** to aid in fusion of the sacrum and ilium at the site of the fusion implant.

In other embodiments of the fusion implant, and without limitation, the fusion implant may have a box-like open body having holes therein for receiving one or more surgical screws for attaching the fusion implant to the sacrum and/or ilium. Without limiting the invention, FIGS. **59-61** show an exemplary embodiment of a fusion implant **600** having a box-like body **601** having holes **602***a* and **602***b* in a proximal end thereof for receiving surgical screws **603** and **604** for engaging with the targeted articular surfaces of the SI joint and holding the fusion implant **600** in place within the SI joint. The body **601** may be designed such that a central plane of the body **601** bisecting the proximal end of the body **601** and bisecting screw holes **602***a* and **602***b* may be roughly aligned with the plane of the SI joint between the articular surfaces when the fusion implant is inserted into the SI joint. The box-like geometry of the fusion implant **600** may resist torsional stress applied by movement of the SI joint. The implant **600** may have a minimum (smallest) outer diameter in a range of about 8 mm to about 20 mm (e.g., about 12 mm to about 18 mm, or any other value or range of values therein), and a maximum (largest) outer diameter in a range of about of about 12 mm to about 40 mm (e.g., about 15 mm to about 30 mm, or any other value or range of values therein). The implant may be paired with an exposure device having a hollow barrel with an internal cross-section that corresponds to the outer diameters and cross-sectional shape of the implant.

The screw holes **602***a* and **602***b* may be angled obliquely with respect to the central plane of the body **601**. For example, and without limitation, hole **602***a* may run obliquely toward a first lateral side of the central plane, and hole **602***b* may run obliquely toward a second (and opposite) lateral side of the central plane. This arrangement allows the surgical screw **603** inserted through screw hole **602***a* to engage one of the bones in the SI joint (e.g., the sacrum) and the surgical screw **604** inserted through screw hole **602***b* to engage with the other bone in the SI joint (e.g., the ilium).

Without limiting the invention, the surgical screws **603** and **604** may be self-drilling screws that can penetrate the bone tissue (e.g., cortical and/or cancellous/spongy bone tissue) of the articular surface. The articular surfaces of the sacrum and/or the ilium may be prepared for the insertion of the surgical screws by removing cortical tissue at the insertion point for the screws or pre-drilling holes for the screws; in such embodiments, self-drilling screws may or may not be utilized. In some implementations, the surgical screws may be doubled threaded screws that create compression of the joints, which may draw the sacrum and ilium together as they are advanced into the bone tissue. The screws may be driven into the bone tissue of the ilium and sacrum by a driving device passed through the working channel positioned over the SI joint, where the driving device has a universal joint or flex shaft (not shown) that allows it to drive the screws into the ilium and sacrum at oblique angles.

The open body **601** of the implant **600** may have a cavity in which bone growth-enhancing materials may be included. The fusion implant **600** may have an open design, where there are no sidewalls closing off the cavity **606** to the articular surfaces of the sacrum and ilium so that bone growth stimulating material that may be placed within the cavity **606** may be in contact with the articular surfaces of the sacrum and ilium within the joint to allow fusion growth across the SI joint. FIG. **61** shows a side view of the fusion implant **600**, in which it can be seen that the fusion implant **600** may have a cavity **606** that is completely open on the lateral sides with no sidewalls to obstruct contact between bone growth-stimulating materials in the cavity **606** and the articular surfaces of the sacrum and ilium. As shown in FIG. **60**, the fusion implant **600** may further include openings **607** along the outer wall of the fusion implant to allow further access to the bone growth-stimulating material in the cavity **606**.

The process of inserting and advancing the fusion implant **600** may be performed by one or more tools that advance the implant through a working channel, as described herein. An inserter (e.g., inserter **147**) may be used to initially place the fusion implant in a desired position between the sacrum and ilium. In some embodiments, and without limitation, the fusion implant may include slots or notches on the proximal end thereof (not shown), which the inserter can engage. In other embodiments, and without limitation, the inserter may

engage the lateral edges of the proximal end of the fusion implant. Once the fusion implant **600** is placed in the targeted position in the SI joint, the surgical screws **603** and **604** may be advanced through screw holes **602***a* and **602***b*, respectively. As the surgical screws **603** and **604** are advanced into the bone tissue of the sacrum and ilium, the sacrum and ilium bones may be pulled towards each other and the sacroiliac joint may be compressed and stabilized. The surgical screws **603** and **604** may pierce the bone tissue (e.g., cortical and/or cancellous/spongy bone tissue) of the sacrum and ilium.

As discussed above, and without limiting the invention, the working channel through which the implant is passed into the SI joint may have an oblong cross-sectional shape or slots running along its length for accommodating the width of the fusion implant **600**. For example, and without limitation, the working channel may have a hollow barrel having slots may be separated by about 180° along the length of the working channel and may have a shape that may accommodate the shape of the body of the fusion implant.

FIG. **62** displays the implant **600** in a desired operative position in the sacroiliac joint **102**, where surgical screw **603** may be engaged with the ilium **200** and surgical screw **604** may be engaged with the sacrum **101**. The implant may create stability and fixation across the joint, compression in the joint, and bone growth-promoting material can be added to the cavity **606** to aid in fusion of the sacrum and ilium at the site of the fusion implant.

In other embodiments of the fusion implant, and without limitation, the fusion implant may have a box-like central body having laterally extending blades for engaging the sacrum and/or ilium. Without limiting the invention, FIGS. **63-64** show an exemplary embodiments of a fusion implant **700** having a box-like body **701** having laterally extending blades **703** and **704** for engaging with the targeted articular surfaces of the SI joint and holding the fusion implant **700** in place within the SI joint. The body **701** may be designed such that a central plane of the body **701** bisecting the proximal end of the body **701** may be roughly parallel or aligned with the plane of the SI joint between the articular surfaces when the fusion implant **700** is inserted into the SI joint. The box-like geometry of the fusion implant **700** may resist torsional stress applied by movement of the SI joint. The implant **700** may have a minimum (smallest) outer diameter in a range of about 8 mm to about 20 mm (e.g., about 12 mm to about 18 mm, or any other value or range of values therein), and a maximum (largest) outer diameter in a range of about of about 12 mm to about 40 mm (e.g., about 15 mm to about 30 mm, or any other value or range of values therein). The implant may be paired with an exposure device having a hollow barrel with an internal cross-section that corresponds to the outer diameters and cross-sectional shape of the implant.

The lateral blades **703** and **704** may be angled obliquely with respect to the central plane of the body **701**. For example, and without limitation, blade **703** may run obliquely toward a first lateral side of the central plane, and blade **704** may run obliquely toward a second (and opposite) lateral side of the central plane. This arrangement allows the blade **703** to engage one of the bones in the SI joint (e.g., the sacrum) and the blade **704** to engage with the other bone in the SI joint (e.g., the ilium). The lateral blades may be separately formed or integral to the fusion implant **700**. The lateral blades may have an outer edge **705** for engagement with the bone tissue of the sacrum or ilium. The outer edge may have varying geometry to facilitate entry into and compression of the sacrum and ilium. In some implementations, and without limitation, the outer edges of the lateral blades may have a sharp cutting edge which can penetrate the bone tissue. In some implementations, and without limitation, the outer edges may be serrated (e.g., with one or more kinds of teeth, such as triangular teeth, hook teeth, crown teeth, etc.). The outer edge may facilitate penetration of the lateral blades into the bone tissue (e.g., cortical and/or cancellous/spongy bone tissue) of the articular surfaces of the ilium and sacrum when the fusion implant is advanced into the SI joint. In some implementations, and without limitation, the articular surfaces of the sacrum and/or the ilium may be prepared for the insertion of the lateral blades by removing cortical tissue at the insertion point.

The body **701** of the implant **700** may have a cavity **706** in which bone growth-enhancing materials may be included. The fusion implant **700** may have an open design, where there are no sidewalls closing off the cavity **706** to the articular surfaces of the sacrum and ilium so that bone growth stimulating material that may be placed within the cavity **706** may be in contact with the articular surfaces of the sacrum and ilium within the joint to allow fusion growth across the SI joint. As shown in FIG. **64**, the fusion implant **700** may further include openings **707** along the outer wall of the fusion implant to allow further access to the bone growth-stimulating material in the cavity **706**. The fusion implant **700** may include a central hole **708** in the proximal end of the body **701**. The central hole **708** may allow for access into the cavity **706**, allowing the bone growth-stimulating materials to be inserted into the cavity **706** either before or after the fusion implant **700** is set into desired operative position in the SI joint. In some implementations, the bone growth-stimulating materials may be present in the cavity **706** prior to insertion of the fusion implant **700** into the SI joint. The design of fusion implant **700** (and other related embodiments) allows for bone graft to be placed pre-operatively as the cavity **706** is not obscured by the lateral blades (bone anchoring mechanism).

The process of inserting and advancing the fusion implant **700** may be performed by one or more tools that advance the implant through a working channel, as described herein. An inserter (e.g., inserter **147**) may be used to initially place the fusion implant in a desired position between the sacrum and ilium. In some embodiments, and without limitation, the fusion implant may include slots or notches on the proximal end thereof (not shown), which the inserter can engage. In other embodiments, and without limitation, the inserter may engage the lateral edges of the proximal end of the fusion implant. The fusion implant **700** may be drive into place in the targeted position in the SI joint by the inserter. As the fusion implant **700** is advanced into the SI joint, the lateral blades **703** and **704** are driven into and penetrate the bone tissue of the sacrum and ilium, and the blades **703** and **704** may act to draw in the sacrum and ilium bones and the sacroiliac joint may be compressed and stabilized. The lateral blades **703** and **704** may pierce the bone tissue (e.g., cortical and/or cancellous/spongy bone tissue) of the sacrum and ilium as the fusion implant is driven into the SI joint. In other implementations, and without limitation, the inserter may be used to place the fusion implant **700** at the SI joint, and subsequently an impactor or other driving tool may be used to drive the fusion implant **700** into the bone tissue and into position in the SI joint.

As discussed above, and without limiting the invention, the working channel through which the implant is passed into the SI joint may have a hollow barrel having an oblong interior cross-sectional shape or slots running along its

length for accommodating the width of the fusion implant **700** and the lateral blades **703** and **704**. For example, and without limitation, a first set of slots may be separated by about 180° along the length of the working channel and may have a shape that is complementary to or large enough accommodate the shape of the fusion implant, and a second set of slots may be separated by about 180° along the length of the working channel and may have a shape may accommodate the shape of the lateral blades.

FIGS. **65-66** show a fusion implant **700***a* that is similar to implant **700** in shape, size, and function, but the blades **703***a* and **703***b* of implant **700***a* are detachable from the implant. As shown in FIG. **65**, the lateral blades **703***a* and **703***b* are inserted into slots **710***a* and **710***b* in the distal portion of the body **701***a*, respectively. This fusion implant embodiment allows for the body **701***a* to be inserted into the SI joint prior to the insertion of the blades **703***a* and **703***b* into the body **701***a*. This may allow the implant **700***a* to be inserted into the SI joint and the blades to be subsequently inserted into the slots **710***a* and **710***b* and engaged with the bone tissue of the ilium and sacrum without the need for a specially shaped (e.g., oblong or slotted) working channel. The blades **703***a* and **703***b* may be passed through the working channel and into slots **710***a* and **710***b* after the body **701***a* has been positioned in the SI joint. An inserter and/or impactor or other tools may be used to insert the blades **703***a* and **703***b* into the slots **710***a* and **710***b* and into the bone tissue of the ilium and sacrum.

As shown in FIG. **66**, the blades of implant **700***a* may include pressure clips **711** that engage with slots **710***a* and **710***b* when the blades are inserted into the slots. The pressure clips may lock the blades into the slots to help stabilize the fusion implant.

FIG. **67** displays the implant **700** (or implant **700***a*) in a desired operative position in the sacroiliac joint **102**, where lateral blade **703** is engaged with the ilium **200** and lateral blade **704** is engaged with the sacrum **101**. The implant may create stability and fixation across the joint, compression in the joint, and bone growth-promoting material can be added to the cavity **706** to aid in fusion of the sacrum and ilium at the site of the fusion implant.

In other embodiments of the fusion implant, and without limitation, the fusion implant may have a box-like central body having a rotatable central axle with lateral flukes thereon for engaging the sacrum and/or ilium as the central axle is rotated. Without limiting the invention, FIGS. **68-69** show an exemplary embodiment of a fusion implant **800** having a box-like open body **801** having a central axel **805** to which two flukes **803** and **804** are attached for engaging with the targeted articular surfaces of the SI joint and holding the fusion implant **800** in place within the SI joint. The flukes **803** and **804** may engage with the articular surfaces of the sacrum and ilium, respectively, when the central axis is rotated. The body **801** may be designed such that a central plane of the body **801** bisecting the proximal end of the body **801** may be roughly parallel to or aligned with the plane of the SI joint between the articular surfaces when the fusion implant **800** is inserted into the SI joint. The box-like geometry of the fusion implant **800** may resist torsional stress applied by movement of the SI joint. The implant **800** may have a minimum (smallest) outer diameter in a range of about 8 mm to about 20 mm (e.g., about 12 mm to about 18 mm, or any other value or range of values therein), and a maximum (largest) outer diameter in a range of about of about 12 mm to about 40 mm (e.g., about 15 mm to about 30 mm, or any other value or range of values therein). The implant may be paired with an exposure device having a hollow barrel with an internal cross-section that corresponds to the outer diameters and cross-sectional shape of the implant.

Without limiting the invention, the flukes **803** and **804** may extend out laterally from central rotating axis **805** at about 180° from each other. This arrangement allows the fluke **803** to engage one of the bones in the SI joint (e.g., the sacrum) and the fluke **804** to engage with the other bone in the SI joint (e.g., the ilium) as the central axle **805** is rotated. In other implementations, and without limitation, the flukes may have other relative positions on the central axle. In still other implementations, and without limitation, the fusion implant may have more than two flukes attached to the central axis that may be arranged in various positions on the central rotating axle. Without limiting the invention, the curvature of all of the flukes extending from the central axle may be oriented in either a clockwise or counterclockwise fashion when viewing the fusion implant from the proximal end of the body (e.g., like the perspective of FIG. **69**). The consistent orientation of all of the flukes allows all of the hooks to engage (hook into) the tissue in the SI joint as the central axle is rotated. In other implementations, and without limitation, one or more of the flukes on the central axle may be obliquely oriented, which may provide additional bite and purchase into the bone tissue. The hooking edge of the hooks may have varying geometry to facilitate entry into and compression of the sacrum and ilium. In some implementations, and without limitation, the hooking edges of the flukes may have a sharp cutting edge which can penetrate the bone tissue. In some implementations, and without limitation, the hooking edges may be serrated (e.g., with one or more kinds of teeth, such as triangular teeth, hook teeth, crown teeth, etc.). The hooking edges may facilitate penetration of the flukes into the bone tissue (e.g., cortical and/or cancellous/spongy bone tissue) of the articular surfaces of the ilium and sacrum when the central axle is rotated. In some implementations, and without limitation, the articular surfaces of the sacrum and/or the ilium may be prepared for the insertion of the surgical screws by removing cortical tissue at the insertion point.

The body **801** of the implant **800** may have a cavity **806** through which the central axle **805** passes. The central axle may rotatably attach to both the proximal and distal ends of the body **801**, such that the central axle **805** may be rotated once the fusion implant is inserted into the SI joint. The central axle **805** may be rotatable in either the clockwise and/or the counterclockwise direction (e.g., from the perspective of FIG. **69**). In some implementations, and without limitation, the central axle **805** may be rotatable in only one direction, that being the direction that allows the hooks to bite into the bone tissue in the SI joint. The one-directional implementation may prevent the hooks from rotating and slipping out of the bone tissue, once they have been rotated and inserted into the bone tissue in the SI joint.

The cavity **806** may have an open design into which bone growth-enhancing materials may be inserted. The body **801** may have no sidewalls closing off the cavity **806** to the articular surfaces of the sacrum and ilium so that bone growth stimulating material that may be placed within the cavity **806** may be in contact with the articular surfaces of the sacrum and ilium within the joint to allow fusion growth across the SI joint. As shown in FIG. **68**, the fusion implant **800** may further include openings **807** along the outer wall of the fusion implant **800** to allow further access to the bone growth-stimulating material in the cavity **806**.

The process of inserting and advancing the fusion implant **800** may be performed by one or more tools that advance the

implant through a working channel, as described herein. An inserter (e.g., inserter **147**) may be used to initially place the fusion implant in a desired position between the sacrum and ilium. In some embodiments, and without limitation, the fusion implant may include slots or notches on the proximal end thereof (not shown), which the inserter can engage. In other embodiments, and without limitation, the inserter may engage the lateral edges of the proximal end of the fusion implant. Subsequently, a driving tool may be engaged with a central hole **802** in the proximal end of the body **801**, which may be "keyed" with teeth or other structures that can be engaged by the driving tool. The driving tool may be operable to rotate the central axle **805** once it is engaged with the central hole **802**, thereby driving the flukes **803** and **804** into the bone tissue in the articular surfaces of the sacrum and ilium.

In some embodiments, and without limitation, the inserter may have a head that has a complementary shape to the central hole **802**, allowing the inserter to engage the with the central hole **802** prior to insertion. The ring structure around the central hole **802** may be connected with or integral to the central axle **805**, allowing central axle to be rotated by the inserter. For example, and without limitation, the inserter can be used to insert the fusion implant into the SI joint, and then the head of the inserter may be rotated in order to rotate the central axle of the fusion implant, thereby engaging the hooks with the bone tissue in the articular surfaces of the sacrum and ilium.

As discussed above, and without limiting the invention, the working channel through which the implant is passed into the SI joint may have a hollow barrel having an oblong internal cross-section or slots running along its length for accommodating the width of the fusion implant **800** and the lateral flukes **803** and **804**.

The central hole **802** may also allow for access into the cavity **806**, such that bone growth-stimulating materials may be inserted into the cavity **806** after the fusion implant **800** is set into desired operative position in the SI joint. In some implementations, and without limitation, the bone growth-stimulating materials may be present in the cavity **806** prior to insertion of the fusion implant **800** into the SI joint. The design of fusion implant **800** (and other related embodiments) allows for bone graft to be placed pre-operatively as the cavity **806** is not obscured by the central axle and hooks (bone anchoring mechanism).

In some embodiments, and without limitation, the fusion implant may have a shape and features like the implant **151** shown in FIGS. **39** and **126-129**. As an example, and without limiting the invention, the implant may be a bone graft as shown in FIGS. **126-129**. The implant **151** may be substantially rectangular, having ribbing **153** on opposing sides to create a surface for catching or gripping with the SI joint when it is inserted. The implant **151** may also have a tapered proximal end to be inserted into the SI joint to act as a wedge, facilitating insertion. The implant **151** may also have slots **152** for receiving forceps of an inserter, and transverse holes to allow bone tissue to grow through the implant and incorporate the implant into the native bone tissue, thereby fusing the SI joint.

FIGS. **71-91** displays the implant in a desired operative position in the sacroiliac joint **102**, where the implant is engaged with the ilium **200** and the sacrum **101**. The implant may create stability and fixation across the joint, compression in the joint, and bone growth-promoting material can be added to the cavity **806** to aid in fusion of the sacrum and ilium at the site of the fusion implant.

Surgical Methods

In some embodiments, the methods of the present invention substantially fuse the SI joint, such that movement in the joint is minimized or substantially eliminated, thereby diminishing or substantially eliminating the patient's pain and discomfort. More specifically, an improved, combined approach for both mechanical holding and surgical fusion through a novel exposure device is described herein. Specifically, with respect to some embodiments, an approach is described to address the SI joint through a posterior approach. In some embodiments, and without limitation, the surgical fusion of the sacrum and an ilium may be accomplished with a posteriorly inserted fusion implant device alone. In other embodiments, and without limitation, surgical fusion may be accomplished with the delivery of both (1) a fusion implant device into the SI joint, and (2) a separate fixation device which can be in the form of a screw, or the like. The fusion may be delivered to the SI joint, placed between the sacrum and ilium, while the fixation device may be delivered through the iliac wing, near the iliac crest, into the sacrum while not entering or passing through the SI joint.

In some embodiments, and without limitation, the method may involve the posterior insertion of a fusion implant, including the steps of creating an incision proximal to the patient's SI joint, dilating the incision, engaging a novel exposure device as described herein with the incision, creating a void in the SI joint, and inserting the fusion implant into the void such that it engages with the articular surfaces of the sacrum and ilium.

Some embodiments, without limitation, include some or all of the following steps, preparing the patient for surgery (e.g., positioning the patient in a prone position to provide the surgeon access to the SI joint, general or local anesthesia, and the like), locating the SI joint and an incision point for access to the SI joint (e.g., by blunt finger palpation), insertion of a pin or wire to create an incision, insertion of a dilator over the pin and impacting the dilator to dilate the incision to a width through which instruments may be passed, inserting a working channel of a novel exposure device over the dilator, securing the working channel in position with fixing pins, removing the dilator, inserting a drill bit apparatus through the working channel, using the drill bit apparatus in the working channel to displace bone in the SI joint thereby creating a void, removing the drill bit apparatus, loading a fusion implant onto an inserter and inserting the fusion implant and inserter into the working channel until the implant is positioned proximal to the void in the patient's SI joint, inserting an impactor into the first working channel and applying force to displace the implant into the void in the patient's SI joint, removing all instruments, and closing the incision.

In some embodiments, and without limitation, the method may involve the posterior insertion a fusion implant and the insertion a separate fixation device through the ilium and sacrum, including the steps of creating an incision proximal to the patient's SI joint, creating an incision over iliac wing, dilating the incisions, engaging a novel exposure device as described herein with both incisions, creating a void in the SI joint, inserting a fusion implant into the void, drilling a hole through the ilium and the S1 vertebra of the sacrum, and inserting a joint fusing device in the ilium and sacrum. The fixation device may be inserted through the iliac wing, near the iliac crest, into the sacrum while not entering or passing through the SI joint.

Other embodiments, without limitation, include some or all of the following steps, preparing the patient for surgery (e.g., positioning the patient in a prone position to provide

the surgeon access to the SI joint, general or local anesthesia, and the like), making a small incision over the top of the iliac wing from a posterior approach, locating the SI joint and an incision point for access to the SI joint (e.g., by blunt finger palpation), insertion of a pin or wire to create an incision, insertion of a dilator over the pin and impacting the dilator to dilate the incision to a width through which instruments may be passed, inserting a first working channel of a double-barreled, double-angled exposure device over the dilator and inserting a second working channel of said exposure device in the incision over the iliac wing, securing the first and second working channels in position with fixing pins, removing the dilator, inserting a drill bit apparatus through each of the first and second work channels, using the drill bit apparatus in the first working channel to displace bone in the SI joint thereby creating a void, using the drill bit apparatus (or a second drill bit apparatus) in the second working channel to drill a hole in the iliac crest and the S1 vertebra of the sacrum, removing the drill bit apparatus, loading an implant (e.g., a graft) onto an inserter and inserting the implant and inserter into the first working channel until the implant is positioned proximal to the void in the patient's SI joint, inserting an impactor into the first working channel and applying force to displace the implant into the void in the patient's SI joint, inserting a joint fusion device coupled to a fusion device inserter into the second working channel and implanting said joint fusion device in the hole in the iliac crest and the sacrum, removing all instruments, and closing the incisions.

Some embodiments include the use of embodiments of the tools or tool sets of the present invention, as described above. Other embodiments of the methods of the present invention are performed without using the tools of the present invention. The methods of the present invention may be performed in addition to or in conjunction with one or more of the known methods. Embodiments of the methods of the present invention (and tools of the present invention) are now further described with reference to the Figures. Although the methods are described with respect to the use of certain tools, other tools with different structures may be used and still be within the scope of the present invention.

FIGS. **72-99** illustrate a surgical procedure for fusing an SI joint with both a fusion implant inserted in the SI joint and a joint fixation device (e.g., a bone screw). The procedure includes positioning a patient in the prone position and administering either a local or general anesthetic. Blunt finger palpation may be used to locate the patient's iliac wing and the SI joint. As shown in FIG. **72**, the SI joint **102** is located between the iliac wing **100** and the sacrum **101** at the base of the pelvis. The SI joint is fully enclosed between the iliac wing **100** and the sacrum **101** and occluded for direct visualization by the iliac wing **100**. Additionally, the iliac crest **200**, the posterior iliac spines, and the pedicle **104** of vertebrae S1 can be observed in this view. The iliac crest **200** may provide a posterior landmark for the entry point of the exposure device of the present invention at the posterior iliac crest, and can be palpated to find the general location of the SI joint. Alternatively, suitable locations for an incision may be determined by imaging methods (e.g., x-ray), or any other suitable method.

As illustrated in FIG. **73-74**, and without limitation, a joint probe **112** may be used to identify the insertion area on the posterior side of the SI joint. The area of the SI joint may be probed until the rounded geometry of the joint probe **112** finds or drops into the proper position in the SI joint, where an incision may be properly made. Subsequently, a guide pin **114** may be inserted through a central channel in the joint probe **112** and into the patient to create an incision in the SI joint, as illustrated in FIG. **70**. Alternatively, the incision may be made by any suitable method, including scalpel or other cutting or dissection tool. The incision may be made proximal to the patient's SI joint, allowing the joint to be accessed by the exposure device. The guide pin **114** may be advanced until its proximal end is in contact with the SI joint or at least partially within SI joint.

As illustrated in FIGS. **76-79**, and without limitation, a dilator may be used to dilate the incision. As an example, dilator **116** may be slotted over guide pin **114** through a central channel running the length of the dilator **116**. The proximal end of the dilator **116** may be slotted over the guide pin **114**, and dilator **116** may then be advanced to or near the SI joint through the incision. As dilator **116** enters the incision, the tapered end **118** pushes the patient's flesh and tissue aside, thereby dilating incision to accommodate an exposure device as described herein. A joint cutting assembly that includes the dilator **116** and a T-handle **120** engaged with a distal end of the dilator **116** may be used to further drive the dilator **116** into the incision to a desired depth to sufficiently expose the SI joint. Alternatively, an impactor (not shown) may be used to further drive the dilator **116** into the incision to a desired depth.

FIG. **76** illustrates the placement of the exposure device **137** over the dilator **116**. The exposure device **137** is advanced over dilator **116** and into incision. Dilator **116** enters the hollow barrel of exposure tool at the distal end of the working channel **239**. The working channel **239** of the exposure tool has distal end **142** that may have a round geometry and/or a tapered rounded profile that is operable to distract the SI joint with minimal damage to soft and connective tissue in and around the posterior side of the SI joint. The working channel may include tangs extending from distal end **142** for engaging the SI joint between the sacrum and ilium. The tangs may align between the articular surfaces and help to position and stabilize the working channel. It is to be appreciated that the working channel may have other perimeter shapes such as oval, to accommodate the shape of some fusion implants. It should be understood that the working channel may have other shapes as well (e.g., triangular, polygonal [pentagonal, hexagonal, etc.], Reuleaux shapes, and other applicable shapes). The exposure device may also further dilate incision. The exposure device is advanced toward SI joint through incision until proximal end **142** is in contact with the SI joint or proximal to the SI joint and in contact with the sacrum and/or ilium. In such embodiments, dilator **116** functions to guide the proximal end **142** to the patient's SI joint.

FIGS. **78-81** illustrate a process of stabilizing the exposure device **137** within incision. As depicted, the exposure device is stabilized using fixing pins **126**, slotted through fixing pin holes or slots **139** on sides of the working channel **239**. Fixing pins **126** may have any suitable structure that permits them to stabilize the exposure device **137**. In some embodiments, and without limitation, stabilizing pins **126** can penetrate the skin and/or flesh and tissue of a human. It is to be appreciated that any suitable method of stabilizing exposure device may be used. Dilator **116** and guide pin **115** may be removed from the working channel either before or after the fixing pins **126** are inserted. In other embodiments, and without limitation, the exposure device may be stabilized by attachment to a surgical or stabilizing arm to hold the exposure device in a static and stable position.

A guide pin **115** may be inserted into the incision through the working channel **239**, either through the dilator before it

is removed, or through a guide sleeve that may be used to insert the guide pin **115** and then may be removed from the working channel **239**.

FIGS. **82-83** illustrate insertion of drill bit apparatus **122** into the incisions through the working channel **239** of the exposure device **137**. The drill bit may be connected to a power drill configured for medical procedures. The drill bit apparatus **122** may have cylindrical outer walls that allow the drill bit apparatus to freely spin with the hollow barrel of the working channel **239**. The cylindrical outer wall may comprise a low-friction material that facilitates smooth spinning of the drill within the hollow barrel of the working channel. The proximal end of the drill bit apparatus **122** may be inserted into the working channel **239** and may be advanced to a predetermined point. In some examples, and without limitation, the proximal end of drill bit apparatus **122** does not extend past the proximal end of the working channel **239** when fully inserted. Preferably, drill bit apparatus **122** may be configured such that it will interact with the working channel **239** only in an orientation that ensures proper positioning of drill bit apparatus **122** relative to the SI joint. For example, and without limitation, the drill bit apparatus may fit snugly into the hollow barrel to avoid any axial deviations, but may still be able to spin freely and at a rapid rotational speed without causing excessive friction or causing significant extraneous or unwanted motion. In other embodiments, and without limitation, the drill bit may have an outer stationary housing that is complementary to and fits snugly within the hollow barrel of the working channel, and the rotating portion of the bit may be within the outer stationary housing and can be rotated while the stationary outer housing is statically engaged with the hollow barrel of the working channel.

In some implementations, and without limitation, the drill bit in the drill bit apparatus **122** may be advanced into the working channel **239** toward SI joint to a predetermined depth. This may be accomplished by an arrestor system in the drill that only allows a particular depth of insertion or by any other suitable method. The drill bit in the working channel **239** may be positioned such that when activated it will create a void in the patient's SI joint by displacing portions of sacrum and ilium. In such examples, the drill bit may be configured such that it will contact the patient's SI joint at a desired portion of the joint and, once activated, will create a void of a desired depth. The void may be configured to receive a fusion implant as described herein or other joint repairing appliance or bone graft for fusing the SI joint. Other joint repairing appliances or apparatus may include a polyether ether ketone (PEEK) implant, a titanium implant, etc. As an example and without limiting the invention, the implant may be a fusion implant like one of those shown in FIGS. **49-70**.

As shown in FIGS. **84-93**, several implements may be inserted through the working channel **239** into the void in the SI joint to prepare the void for receiving a fusion implant. For instance, a box chisel **131** and/or a rasp **132** may be inserted into the void through the working channel **239** to expand and clear tissue from the void to facilitate a clean and efficient insertion of the fusion implant into the void (see, e.g., FIGS. **84-86**). As shown in FIGS. **88-89**, an impactor **136** may also be used to deepen or spread the void.

FIGS. **39** and **90** illustrate the use of a fusion implant inserter **147** to insert a fusion implant into the void in the SI joint. The inserter **147** may be inserted into the working channel **239** of the exposure device **137** once a void has been formed in the SI joint. For example, and without limitation, prior to insertion, the fusion implant is grasped by forceps of the inserter **147**, which may engage with grooves along sides of the fusion implant. In other examples, and without limitation, the inserter may have a head that is threaded, keyed, or otherwise structured such that it is complementary to a hole in the proximal end of the fusion implant (e.g., the proximal hole in fusion implant **700** or **800**). Once engaged with the fusion implant, the inserter **147** may be inserted into the working channel and may be advanced until it meets resistance at the void. The inserter **147** may be operable to then release the fusion implant, leaving it in the void. In some examples, the inserter **147** may have a mechanism for grasping and releasing the fusion implant (e.g., arms **149** may be operable to clamp and release the fusion implant), providing an efficient means of depositing the fusion implant in the void.

In some implementations, and without limitation, the fusion implant may require that one or more elements thereof be rotated in order for the fusion implant to engage with the bone tissue in the SI joint (e.g., fusion implants **400**,**400***a*, **500**, **800**, and other related embodiments). In some implementations, and without limitation, the inserter may have arms thereon for engaging slots or notches in the proximal end of the fusion implant and may be capable of rotating the fusion implant (e.g., fusion implants **400**, **400***a*, **500**, and related embodiments) once it is placed in the SI joint. In such implementations, the inserter may have distal rotatable member that is capable of rotating independently of shaft and handle of the inserter, allowing the surgeon to use the inserter to place the fusion implant into the void in the proper orientation without unwanted rotation and then deliberately rotate the fusion implant and engage it with the articular surfaces. In other implementations, and without limitation, the inserter may include a distal head that may be operable to engage a hole in the proximal surface of the fusion implant, which may be threaded or machined (e.g., to have gear teeth, notches, angular sides [e.g., a square shape, etc.] or other features) in a manner to allow an interlocking fit with the distal head of the inserter. In such implementations, the distal head may be operable to rotate the fusion implant once it is placed in the void in the SI joint. In other implementations, and without limitation, a tool separate from the inserter may be used to rotate the fusion implant once it is in place within the SI joint. For example, and without limitation, a driver having a distal head operable to engage the fusion implant may be passed through the working channel and engage with the fusion implant, and subsequently rotate the fusion implant.

An impactor **236** may be used to exert force on the fusion implant as it is in the void, in order to drive the fusion implant securely into the void, as shown in FIG. **91**. The impactor may be utilized to drive the fusion implant into the bone tissue of the articular surfaces of the SI joint, particularly in implementations that utilize a fusion implant having lateral blades (e.g., fusion implant **700** and related embodiments). The fusion implant may thereby be properly inserted into the void. Though, the impactor may be used in other implementations as well, for example, to drive the fusion implant deeper into the void prior to rotating the fusion implant (e.g., fusion implants **400**, **400***a*, **500**, and related embodiments), or prior to driving screws of the fusion implant into the articular surfaces of the SI joint (e.g., fusion implant **600** and related embodiments). Additionally, the impactor **236** may be used to add additional therapeutic materials, such as bone morphogenetic proteins (BMP), demineralized bone matrix (DBM), stem cells, and other materials, to the void to improve recovery and growth of the bone in the SI joint.

Subsequently, the exposure device may be removed from the patient. Also, the fixing pins **126** may be removed from both incisions. The tissues in the incisions may then be sutured, to facilitate healing.

In some embodiments of the present invention, and without limitation, surgical fusion may be accomplished with the delivery of both (1) a fusion implant device into the SI joint, and (2) a separate fixation device which can be in the form of a screw, or the like. The fusion may be delivered to the SI joint, placed between the sacrum and ilium, while the fixation device may be delivered through the iliac wing, near the iliac crest, into the sacrum while not entering or passing through the SI joint. In such embodiments, the steps of locating the SI joint and making an incision over the SI joint may be the same or similar to the steps described above and as shown in FIGS. **71-77**.

FIGS. **92-114** illustrate additional steps of a surgical procedure for fusing an SI joint with both a fusion implant inserted in the SI joint and a joint fixation device (e.g., a bone screw) fixing the ilium and sacrum together. The procedure may include making an incision over the iliac wing near the iliac crest for the insertion of a second working channel of a double-barreled, double-angled exposure device. A dilator may be used to dilate an incision formed over the SI joint, as previously described. As an example, and without limitation, FIGS. **92-93** show dilator **116** may be slotted over a guide pin **114** through a central channel running the length of the dilator **116**. The proximal end of the dilator **116** may be slotted over the guide pin **114**, and dilator **116** may then be advanced to or near the SI joint through incision. As dilator **116** enters the incision, the tapered end **118** pushes the patient's flesh and tissue aside, thereby dilating incision to accommodate exposure device. A joint cutting assembly that includes the dilator **116** and a T-handle **120** engaged with a distal end of the dilator **116** may be used to further drive the dilator **116** into the incision to a desired depth to sufficiently expose the SI joint. Alternatively, an impactor (not shown) may be used to further drive the dilator **116** into the incision to a desired depth.

FIGS. **94-95** illustrate the placement of the double-barreled, double-angled exposure device over the dilator **116**. The exposure device is advanced over dilator **116** and into incision. Dilator **116** enters the hollow barrel of exposure tool at the distal end of the first working channel **239**. Without limiting the invention, the first working channel **239** of the exposure tool has proximal end **142** that may have a round geometry and/or a tapered rounded profile that is operable to distract the SI joint with minimal damage to soft and connective tissue in and around the posterior side of the SI joint. It is to be appreciated that the working channel may have other perimeter shapes circular, oval, triangular, polygonal (pentagonal, hexagonal, etc.), Reuleaux shapes, and other applicable shapes. The exposure device may also further dilate incision. The exposure device is advanced toward SI joint through incision until proximal end **142** is in contact with the SI joint or proximal to the SI joint and in contact with the sacrum and/or ilium. In such embodiments, dilator **116** functions to guide the proximal end **142** to the patient's SI joint.

The exposure device may be configured such that when the first working channel **239** of the exposure device is established in position in or near the SI joint the second working channel **240** is oriented over the iliac wing near the iliac crest (the location of the incision) and in an orientation that will allow the second working channel to guide a drill bit through the ilium and sacrum (e.g., the S1 vertebra) without traversing the SI joint (i.e., without causing damage to the SI joint). The relative position of the first and second working channels of the double-barreled, double-angled exposure device accommodates the contour of the pelvis between the ilium and the SI joint such that said first working channel can be engaged with a posterior side of the SI joint and said second working channel can be engaged with a posterior portion of the iliac wing at an angle that is aligns a longitudinal axis of the second working channel anterior to the SI joint.

FIGS. **96-99** illustrate a process of stabilizing the exposure device within incision. As depicted, the exposure device is stabilized using fixing pins **126**, slotted through fixing pin holes or slots **139** on sides of the first and second working channels **239** and **240**. Fixing pins **126** may have any suitable structure that permits them to stabilize the exposure device. In some embodiments, stabilizing pins **126** can penetrate the skin and/or flesh and tissue of a human. It is to be appreciated that any suitable method of stabilizing exposure device may be used. Dilator **116** and guide pin **115** may be removed from the first working channel either before or after the fixing pins **126** are inserted.

Guide pins **115** may be inserted into the incision through the first and second working channels **239** and **240**, either through the dilator before it is removed, or through guide sleeves that may be used to insert the guide pins **115** and that may then be removed from the first and second working channels **239** and **240**. FIGS. **100-102** provide views of exemplary guide pin placement for the double-barreled exposure device from multiple perspectives. FIGS. **103-104** provide views of exemplary placement of the double-barreled exposure device from multiple perspectives.

FIGS. **105-106** illustrate insertion of drill bit apparatus **122** into the incisions through the first and second working channels **239** and **240** of the exposure device. The drill bit may be connected to a power drill configured for medical procedures. The drill bit apparatus **122** may have cylindrical outer walls that allow the drill bit apparatus to freely spin with the hollow barrel of the first and second working channels **239** and **240**. The cylindrical outer wall may comprise a low-friction material that facilitates smooth spinning of the drill within the hollow barrels of the first and second working channels. The proximal ends of the drill bit apparatus **122** may be inserted into the first and second working channels **239** and **240** and may be advanced to a predetermined point. In some examples, the proximal ends of drill bit apparatus **122** do not extend past the proximal end of the first and second working channels **239** and **240** when fully inserted. Preferably, drill bit apparatus **122** are configured such that it will interact with the first and second working channels **239** and **240** only in an orientation that ensures proper positioning of drill bit apparatus **122** relative to the SI joint and the ilium. For example, the drill bit apparatus may fit snugly into the hollow barrel to avoid any axial deviations, but may still be able to spin freely and at a rapid rotational speed without causing excessive friction or causing significant extraneous or unwanted motion. In other embodiments, and without limitation, the drill bit may have an outer stationary housing that is complementary to and fits snugly within the hollow barrel of the working channel, and the rotating portion of the bit may be within the outer stationary housing and can be rotated while the stationary outer housing is statically engaged with the hollow barrel of the working channel.

The drill bits in the drill bit apparatus **122** may be advanced into channel the first and second working channels **239** and **240**. With regard to the drill in the first working channel **239**, the drill bit is advanced toward SI joint to a

predetermined depth. This may be accomplished by an arrestor system in the drill that only allows a particular depth of insertion or by any other suitable method. The drill bit in the first working channels **239** may be positioned such that when activated it may create a void in the patient's SI joint by displacing portions of sacrum and ilium. In such examples, the drill bit may be configured such that it will contact the patient's SI joint at a desired portion of the joint and, once activated, will create a void of a desired depth.

The void may be configured to receive a fusion implant as described herein or other joint repairing appliance or apparatus for fusing the SI joint. Other joint repairing appliances apparatus may include a polyether ether ketone (PEEK) implant, a titanium implant, etc. As an example and without limiting the invention, the implant may be a fusion implant like one of those shown in FIGS. **49-70**. The fusion implant may also have slots for receiving forceps of an inserter tool or a hole or recess in a proximal end of the fusion implant for receiving an inserter tool, and transverse holes to allow bone tissue to grow through the implant, and incorporate the implant into the native bone tissue, thereby fusing the SI joint.

The drill bit in the second working channels **239** may be positioned such that when activated it will drill a hole through the iliac wing of the patient near the iliac crest and through the sacrum (e.g., the S1 vertebra). The drill bit may have sufficient length to reach the S1 vertebra from the iliac wing position of the second working channel. The relative angled position of the first and second working channels **239** and **240** of the exposure device positions the second working channel such that the drill bit can be advanced through to the S1 vertebra without traversing (passing through) the SI joint, thereby avoiding any damage to the SI joint tissues (e.g., the ligaments).

As shown in FIGS. **107-112**, several implements may be inserted through the first working channel **239** into the void in the SI joint to prepare the void for receiving a fusion implant. For instance, and without limitation, a box chisel **131** and or a rasp **132** may be inserted into the void through the first working channel **239** to expand and clear tissue from the void to facilitate a clean and efficient insertion of the fusion implant into the void. An impactor **136** may also be used to deepen or spread the void.

FIGS. **39** and **113** illustrate the use of a fusion implant inserter **147** to insert a fusion implant (e.g., as described above and shown in FIGS. **49-70**) into the void in the SI joint. The inserter **147** may be inserted into the first working channel **239** of the exposure device. Prior to insertion, the fusion implant may be grasped by the forceps of the inserter **147**, which may engage with grooves or recesses on the fusion implant. In other implementations, and without limitation, the fusion implant may have a hole or recess in a proximal end of the fusion implant for receiving an inserter tool, and the inserter tool may have a head or extension that fits within the hole or recess. The inserter **147** and the fusion implant may be inserted together into the first working channel and may be advanced until it meets resistance at the void. The inserter **147** may then release the fusion implant, leaving it in the void. In some examples, the inserter **147** may have a mechanism for grasping and releasing the fusion implant, providing an efficient means of depositing the fusion implant in the void.

Subsequently, an impactor **236** may be used to exert force on the fusion implant in the void, in order to drive fusion implant securely into the void, as shown in FIG. **114**. The fusion implant may thereby be properly inserted into the void. Additionally, the impactor **236** may be used to add therapeutic materials, such as bone morphogenetic proteins (BMP), demineralized bone matrix (DBM), stem cells, and other materials, to the void to improve recovery and growth of the bone in the SI joint.

A joint fixation device (e.g., a compression screw) may be inserted into the iliac wing and the sacrum (the S1 vertebra) through the second working channel as the double-barreled exposure device is secured to the SI joint and the ilium. A fixation device **158** may be inserted at angle into the ilium and the sacrum that compresses the SI joint, thereby compressing the fusion implant within the SI joint. However, in other embodiments, the angle of the hole drilled in the ilium and sacrum in an orientation that distracts the SI joint, providing room in the SI joint for bone tissue grow around the fusion implant. In further embodiments, the structure of the joint fixation device **158** may be configured to create distraction in the SI joint.

The joint fixation device **158** may be inserted into the second working channel along with a fixation implant driver **125** engaged therewith. In the case of a screw, the screw **158** may be advanced into the hole drilled through the ilium and the sacrum manually with a specialized driver **125**. Alternatively, the screw or other fusion device can be installed by an automated process. Without limiting the invention, FIGS. **115-116** show an exemplary fixation device **158** and an exemplary fusion implant **151** positioned in the pelvis from posterior and superior views, respectively. The fusion implant **151** sits in the SI joint **102** between the articular surfaces of the sacrum **101** and the iliac wing **100**. The fixation device **158** passes through the iliac wing **100** and into the body of S1 of the sacrum **101** without traversing (passing through) the SI joint **102**.

Once the fusion implant **151** and the fixation device **158** are implanted in their proper positions, the fixation implant insertion implant device **125** and the double-barreled exposure device may be removed from the patient. Also, the fixing pins **126** may be removed and the exposure device may be removed from both incisions. The tissues in the incisions may then be sutured, to facilitate healing.

In some embodiments, and without limitation, the working channels may have different structures and orientations. Without limiting the invention, FIGS. **117-120** illustrate further embodiments of the invention. In FIG. **117**, a single working channel **290** is shown engaged with the SI joint. In this example, the single working channel **290** can be individually orientated and engaged with the SI joint, and separately as second working channel **290** may be engaged with the preferred insertion point on the ilium, as shown in FIG. **118**. This embodiment provides the flexibility of individually orienting the two working channels. Subsequently, an adjustable rack **161** may be engaged with both the of the individual working channels **290** as shown in FIG. **119**, thereby stabilizing the two working channels and maintaining their orientation relative to one another. It is to be appreciated that the two working channels in this example may be stabilized by other or additional methods.

In some embodiments, the working channel may have two barrel or more barrels (e.g., 3, 4, or more barrels, in various orientations—parallel, skewed, etc.), each capable of receiving surgical implements and being used to introduce implants or other devices or materials into the SI joint. For instance, the two or more barrels may include two parallel barrels, two skewed barrels, three parallel barrels in a single plane, three parallel barrels in a triangular arrangement, etc. As an example, and without limiting the invention, FIG. **120** shows an individual working channel **295** engaged with the SI joint having two parallel barrels. The additional barrel

may facilitate the formation of a second void and the insertion of a second fusion implant or some other fusion device or bone graft material in the second void. As an example, and without limitation, FIG. **121** shows a posterior view of the SI joint having two fusion implants **151** inserted therein. An exposure device having two parallel barrels such as working channel **295** may be used to insert two fusion implants into the SI joint, as shown in FIG. **121**.

The working channel **295** may be used individually in a SI joint fusion procedure, or in combination with another working channel. For example, and without limiting the invention, FIG. **122** shows an exemplary working channel **290** that may be used in conjunction with the working channel **295**, allowing for insertion of a joint fixation device in the ilium and sacrum. The working channels **290** and **295** may also be connected to one another by an adjustable rack, as described above, thereby stabilizing the two working channels and maintaining their orientation relative to one another. It is to be appreciated that working channels having two or more barrels may fixedly attached to a second working channel at an angle by a connecting member, as described in the examples above. As an example, and without limitation, FIGS. **123-124** show posterior and superior views of an SI joint having two fusion implants **151** inserted therein, and a fixation device **157** implanted in the iliac wing **100** and the body of S1 of the sacrum **101**. The fusion implants **151** sit in the SI joint **102** between the articular surfaces of the sacrum **101** and the iliac wing **100**. The fixation device **157** passes through the iliac wing **100** and into the body of S1 of the sacrum **101** without traversing (passing through) the SI joint **102**. An exposure device having two parallel barrels such as working channel **295** may be used to insert two fusion implants into the SI joint, and a second working channel may be used to insert the joint fixation device in the iliac wing and the sacrum, as shown in FIGS. **123-124**.

It is also to be appreciated that the individual working channel having two or more barrels are not limited to SI joint fusion procedures, and may have other beneficial applications. Furthermore, the other working channel apparatuses may be useful in other procedures as well. For instance, the working channels of the present invention may be associated with various racks (e.g., having varying lengths and means of attachment) that facilitate procedures where two difficult surgical sites are needed.

It is to be further appreciated that the working channel apparatuses (exposure devices) described herein can be utilized in SI joint fusion procedures on both SI joints of a patient simultaneously. As shown in FIG. **125**, the presently described exposure devices can be utilized in a bilateral SI joint procedure.

The methods described herein may be used to treat both of the patient's SI joints either at the same or approximately the same time (e.g., during the same procedure) or in sequence.

It is to be understood that variations and modifications of the present invention may be made without departing from the scope thereof. It is also to be understood that the present invention is not to be limited by the specific embodiments disclosed herein, but only in accordance with the appended claims when read in light of the foregoing specification.

What is claimed:

1. A method for repairing a sacroiliac joint of a patient, comprising:

a. creating a first incision proximal to the patient's sacroiliac joint;

b. inserting a working channel into said first incision, said working channel having a hollow barrel with an interior guidance slot in an interior diameter of the hollow barrel that does not traverse an outer diameter of said hollow barrel for controlling the advancement of surgical tools passed through said working channel, and having at least one tang on a distal end thereof;

c. creating a void in said sacroiliac joint; and

d. inserting a fusion implant into said void, wherein said fusion implant includes at least one protrusion that engages with bone tissue in an articular surface of at least one of the sacrum and the ilium of said sacroiliac joint thereby preventing pullout of the fusion implant.

2. The method of claim **1**, wherein said fusion implant has a central body and said at least one protrusion that extends from said central body and fixes relative positions of said ilium and sacrum with engagement of said at least one protrusion with said ilium and sacrum.

3. The method of claim **2**, wherein said at least one protrusion includes an anchor that penetrates at least one of the patient's ilium and the patient's sacrum and thereby fixes relative positions of said ilium and sacrum.

4. The method of claim **3**, wherein said anchor is a helical anchor operable to substantially fix the patient's ilium to the patient's sacrum, thereby substantially immobilizing the patient's sacroiliac joint.

5. The method of claim **2**, wherein said fusion implant comprises a cavity for holding a fusion-promoting material and having at least one hole therein for allowing the growth of bone tissue into said cavity.

6. The method of claim **1**, wherein the inserting said fusion implant comprises:

a. attaching said fusion implant to an inserter having a plurality of implant engagement arms at a distal end of said inserter by engaging said implant engagement arms with slots on a proximal end of said fusion implant, said inserter further having a slot-engagement protrusion for engaging with said interior guidance slot; and

b. inserting said inserter into the hollow barrel of said working channel with said slot-engagement protrusion aligned with said interior guidance slot within the interior diameter of said hollow barrel and advancing said inserter until said interior guidance slot arrests the penetration of said inserter and said fusion implant into said sacroiliac joint at a pre-determined depth.

7. The method of claim **1**, wherein the step of creating the void in said sacroiliac joint comprises inserting a rasp having a slot-engagement protrusion into the hollow barrel of said working channel with said slot-engagement protrusion nested in the interior guidance slot in the interior diameter of said hollow barrel, wherein engagement of said slot-engagement protrusion with said interior guidance slot controls the depth of advancement of said rasp through said hollow barrel and maintains said rasp in proper orientation for insertion in the void.

8. The method of claim **1**, wherein said interior guidance slot is operable to engage and align a slot-engagement protrusion of one or more surgical tools to be inserted into said hollow barrel, wherein engagement of said slot-engagement protrusion with said guidance slot controls the depth of advancement of surgical tools through said hollow barrel and maintains said one or more surgical tools in proper orientation for insertion into said incision.

9. The method of claim **1**, wherein the at least one tang comprises a plurality of blunt tangs on the distal end thereof that are inserted between the articular surfaces of an ilium

and a sacrum of said sacroiliac joint to stabilize the surgical channel tool as surgical instruments are passed through the working channel into the sacroiliac joint.

10. A method for repairing a sacroiliac joint of a patient, comprising:

a. creating a first incision proximal to the patient's sacroiliac joint;

b. inserting a surgical channel tool into said first incision from the posterior of the patient, said surgical channel tool having two bilateral blunt tangs on a distal end thereof that are inserted between the articular surfaces of an ilium and a sacrum of said sacroiliac joint to stabilize the surgical channel tool as surgical instruments are passed through a surgical channel of said surgical channel tool and into the sacroiliac joint, said surgical channel including a hollow barrel having an interior guidance slot in an interior diameter of said hollow barrel for controlling the depth of advancement of surgical tools into said surgical channel and maintaining said surgical tools in proper orientation for insertion into said incision, wherein said interior guidance slot does not traverse an outer diameter of said hollow barrel;

c. creating a void in said sacroiliac joint;

d. inserting a fusion implant into said void through said hollow barrel of said surgical channel tool using an inserter having a plurality of implant engagement arms at its distal end engaged with slots on a proximal end of said fusion implant, said fusion implant having at least one protrusion for engagement with bone tissue in an articular surface of at least one of the sacrum and the ilium of said sacroiliac joint; and

e. driving said fusion implant into said void such that said at least one protrusion engages with said bone tissue preventing pullout of the fusion implant, and said fusion implant fixes relative positions of said sacrum and said ilium.

11. The method of claim **10**, wherein said at least one protrusion comprises a helical anchor having a sharp end for piercing said bone tissue in an articular surface of at least one of said sacrum and said ilium.

12. The method of claim **10**, wherein said fusion implant comprises a body having a cavity therein and perforations on an exterior thereof that expose said cavity to an exterior of said body, and a hole in a proximal end of said body for accessing an interior of said cavity.

13. The method of claim **10**, wherein said fusion implant is operable to connect said sacrum to said ilium in fixed relative positions in the sacroiliac joint.

14. The method of claim **10**, wherein the inserting the fusion implant comprises:

a. inserting the inserter into said hollow barrel of said surgical channel tool, wherein said inserter has an insertion control protrusion;

b. engaging said insertion control protrusion with the interior guidance slot in the interior diameter of the hollow barrel for controlling the advancement of said inserter into said surgical channel tool and preventing rotation of said inserter; and

c. advancing the inserter until said insertion control protrusion is arrested by the interior guidance slot at a pre-determined point in the hollow barrel, and said inserter is prevented from moving the fusion implant further into said sacroiliac joint.

15. The method of claim **10**, wherein driving said fusion implant into said void comprises pushing said fusion implant into said void such that the at least one protrusion contacts said bone tissue.

16. The method of claim **10**, wherein the step of creating the void in said sacroiliac joint comprises inserting a rasp having a slot-engagement protrusion into said hollow barrel of said surgical channel tool with said slot-engagement protrusion aligned with said interior guidance slot in the interior diameter of said hollow barrel, wherein engagement of said slot-engagement protrusion with said interior guidance slot controls the depth of advancement of said rasp through said hollow barrel and maintains said rasp in proper orientation for insertion into said void.

17. The method of claim **1**, wherein said interior guidance slot in the interior diameter of said working channel is for alignment and engagement with a slot-engagement protrusion of one or more surgical tools to be inserted into said hollow barrel, wherein engagement of said slot-engagement protrusion with said interior guidance slot controls the advancement of surgical tools through said hollow barrel and maintains said one or more surgical tools in proper orientation for insertion into said incision.

18. A method for repairing a sacroiliac joint of a patient, comprising:

a. creating an incision proximal to the patient's sacroiliac joint to allow access to the posterior portion of the sacroiliac joint;

b. inserting a working channel of a surgical channel tool into said incision from the posterior of the patient, said working channel having a plurality of blunt tangs on a distal end thereof that are inserted between articular surfaces of an ilium and a sacrum of said sacroiliac joint to stabilize the surgical channel tool as surgical instruments are passed through the working channel into the sacroiliac joint, said working channel including a hollow barrel having an interior guidance slot in an interior diameter of said hollow barrel for controlling a depth of advancement of surgical tools into said working channel and maintaining said surgical tools in proper orientation for insertion into said incision, wherein said interior guidance slot does not traverse an outer diameter of said hollow barrel;

c. inserting a fusion implant having a plurality of bone-engagement protrusions through said hollow barrel into said sacroiliac joint using an inserter having a plurality of implant engagement arms at its distal end engaged with slots on a proximal end of said fusion implant, wherein said fusion implant is inserted on a path that is substantially parallel to articular surfaces of the sacroiliac joint, said inserter having an insertion control protrusion for engagement with said interior guidance slot;

d. advancing the inserter until said insertion control protrusion is arrested by said interior guidance slot in the hollow barrel and placing said fusion implant into said sacroiliac joint, wherein said inserter is prevented from moving the fusion implant beyond a pre-determined point in said sacroiliac joint; and

e. driving said fusion implant into said sacroiliac joint such that said plurality of bone-engagement protrusions engage with said articular surfaces of said ilium and said sacrum thereby preventing pullout of the fusion implant from said sacroiliac joint.

19. The method of claim **18**, wherein said engagement of said fusion implant with said bone tissue fixes the relative position of said sacrum and the ilium of said sacroiliac joint.

20. The method of claim **18**, wherein said plurality of bone-engagement protrusions comprise a helical anchor having a sharp end for piercing said bone tissue, and said helical anchor first penetrates said articular surface of said at least one of said sacrum and said ilium.

21. The method of claim **18**, wherein no further fusion implants are introduced into said sacroiliac joint and said fusion implant is sufficient to fuse the sacroiliac joint.

22. The method of claim **18**, further comprising creating a void in the sacroiliac joint having a complementary shape to said fusion implant, wherein said fusion implant is inserted into said void.

23. The method of claim **18**, wherein engagement of said insertion control protrusion with said interior guidance slot maintains said inserter tool and said fusion implant in proper orientation for insertion of the fusion implant into said sacroiliac joint.

* * * * *