UNITED STATES DISTRICT COURT
DISTRICT OF DELAWARE

Metrom Rail, LLC Plaintiff, v. Siemens Mobility, Inc., Thales Transport & Security, Inc., Humatics Corp., and Piper Networks, Inc., Defendants.	No. 22-49-RGA **DEMAND FOR JURY TRIAL**

FIRST AMENDED COMPLAINT

Metrom Rail, LLC ("Metrom") alleges the following:

SUBJECT MATTER JURISDICTION

1. This action arises, in part, under the patent laws of the United States, Title 35 of the United States Code. This court has subject matter jurisdiction under 28 U.S.C. §§ 1331, 1332, 1338, and 1367.

PERSONAL JURISDICTION

2. Defendants Siemens Mobility, Inc. ("Siemens"), Thales Transport & Security, Inc., also d/b/a Thales Transport or Thales GTS (collectively, "Thales"), Humatics Corp. ("Humatics"), and Piper Networks, Inc. ("Piper") are all domestic Delaware corporations subject to general personal jurisdiction in Delaware.

Siemens Exhibit 1016
Siemens et al. v. Metrom Rail

VENUE

3. Venue is proper under 28 U.S.C. Sections 1391(b)-(d) and 1400(b).

4. Joinder of the Defendants in this action is proper under 35 U.S.C. § 299 because the claims herein arise from a common nucleus of operative facts related to the same transaction or series of transactions, and joinder is not based soley on allegations that all defendants infringe the same patent.

BACKGROUND

5. Metrom Rail, LLC ("Metrom") is a pioneer in the area of decentralized train control with Ultra Wide Band ("UWB") technology. Founded in 2010, Metrom is an Illinois Corporation with a headquarters in Lakemoor, Illinois.

6. Railroad equipment is heavy and can travel at speeds over 80 miles per hour while pulling railcars filled with people. While generally very safe, accidents do happen. And, because of the sheer size and speed that trains can travel, the results of an accident can be devastating.

7. Metrom has developed the innovative "AURA" system and other worker and railway equipment protection products using UWB for new and existing rail systems. Metrom's products are designed, built, and tested in Illinois.

8. Historically, railroads have implemented complex and expensive systems to avoid accidents. Despite these systems, accidents still occur, and the traditional suppliers of signal systems have not fielded low cost, reliable train control systems for precisely locating and controlling commuter trains in high traffic, urban rail environments.

9. In 2012, Metrom introduced its first AURA brand product and the first commercially successful application of UWB in the railroad environment, a collision avoidance system for railroad maintenance of way ("MOW") vehicles.

10. Railroad MOW equipment is especially subject to collisions because the equipment tends to operate in groups of small but independently powered and operated vehicles in "work trains" with close spacing. For example, a series of machines for performing different kinds of maintenance on the rail bed, cross ties, and rails. Collisions are surprisingly frequent, since workers are focused on their maintenance work, sightlines on the equipment are poor or obstructed, and the equipment is operated in close proximity with frequent starts and stops.

11. Metrom's collision avoidance technology solved the problem of MOW collisions by equipping each unit with UWB radios that accurately determine the range to the MOW vehicle ahead and automatically warns the operator or brakes the MOW equipment if the operator does not act within a margin of safety. Metrom filed

for and obtained patents on this system, including U.S. Patent Nos. 8,812,227 and 9,043,131.

12. Since its introduction, Metrom's AURA system has been installed on over 3,000 railroad maintenance vehicles in the U.S. and Canada with overall reductions in incidents of 90% or greater and no collisions between equipped vehicles when the system was properly installed, maintained, and used, avoiding countless injuries and saving millions of dollars in equipment damage.

13. Metrom also pioneered and demonstrated worker safety systems that allow real time alerts to the operators of equipment and MOW workers on the tracks regarding the presence of approaching trains. Metrom has been awarded a series of patents for those innovations including U.S. Patent Nos. 10,179,595 and 10,737,709.

14. In 2013, Metrom began exploring ways to expand its successful collision avoidance system to the mass transit context. Urban mass transit is an environment with some characteristics similar to the MOW environment, with close headways and high numbers of trains. At peak periods, it is desirable for transit agencies to allow trains to run as close together as possible.

15. Traditional signal control for mass transit rail divided train lines into a series of fixed track segments ("blocks"), with complex, cumbersome equipment designed to prevent two trains from entering the same fixed section of track at the

same time. Smaller blocks allow for higher volume but each block adds additional signals, controls, and points of failure for maintenance.

16. In the 1980s, systems that allowed for "moving" blocks that allowed a moving buffer region before and after a train were developed. Defendants Siemens and Thales are two of a handful of companies in the world that offer these systems for transit agencies. Their offering in the U.S. is known as "Communications Based Train Control" or CBTC. In order to meet safety requirements, legacy CBTC systems employed complex networks of track side equipment that communicated train status to a central control point, which communicates authority to operate to each train. The technology is subject to large positional errors, is prone to failure, and while it is an improvement on fixed block systems, is very costly for even small improvements in performance.

17. The problems were especially acute for the New York MTA ("MTA"), which by 2017 attributed 30% of its major incidents to signal issues. At that time, more than 40% of the signaling equipment in the MTA was also more than 50 years old.

18. The MTA and its sub-units, including New York City Transit, are organized as New York public benefit corporations that are not immune from suit under the U.S. Constitution, Amendment XI.

19. An illustration of CBTC complexity and cost is MTA's "Flushing" line. The MTA budget for converting Flushing to CBTC was $588 million, and the project took 9 years to complete 10.5 miles of track from June of 2010 to March of 2019. The project is at least 5 years late and $157 million over budget.

20. Responding to increasingly severe quality of service issues, in 2017 the MTA solicited "genius" applications from the public for solutions to its ageing, outmoded, and inefficient centralized CBTC system and even older "fixed block" signaling infrastructure. Metrom responded to that invitation with Metrom's design for a system using UWB technology that accurately and continuously resolved train position at the vehicle level and supplied that positioning information in vehicle for immediate application to train control, greatly reducing position errors and communication delay and allowing for higher frequency and more reliable train operation at a lower cost. Metrom referred to its solution as "Positive Train Control System based on Ultra-Wideband for Communications and Location" or PTCS-2, since Metrom's solution provided the high level of automated control and safety in preventing unsafe train operation with decentralized command authority based on the train. Metrom's proposal was selected by the MTA as a "Genius" challenge finalist in December of 2017 and a Genius challenge winner in March of 2018. http://www.mta.info/press-release/mta-headquarters/mta-announces-8-winners-mta-genius-transit-challenge.

21. The success of Metrom's technology with the MTA was a threat to Defendants Siemens and Thales existing business with the MTA. At that time, Siemens and Thales were promoting a multi-billion dollar retrofit of the NYCT system using their existing CBTC technology, which was developed in the 1980s and was effectively unchanged since that time. Metrom's solution obsoleted billions of dollars of legacy trackside and in-cab equipment that supports CBTC resulting in no justification for the MTA to purchase that equipment if Metrom's solution was fully implemented. Metrom's PTCS-2 system cost half as much with higher reliability and superior operational performance.

22. Siemens began a campaign to interfere with the technically superior Metrom offering by filing a patent application dated August 8, 2017 claiming a collision avoidance solution using UWB, international application number WO 2019/030018 ("WO '018"), that appears to be an attempt to file on the same collision avoidance technology that Metrom had already patented. Siemens' application has not been allowed in any jurisdiction, and the primary references cited against allowance of that application are Metrom's patents.

23. The WO '018 application is not the only patent application filed by Siemens attempting to claim inventorship for inventions developed and patented by Metrom and disclosed to Siemens by Metrom. Siemens has also filed, naming as

inventors two of Siemens' employees who had been working with Metrom, at least three other patent applications that claim inventions previously disclosed to Siemens by Metrom or already disclosed by Metrom's patents and pending applications. Those cases are United States application number 16/516,456 ("Train Control System and Train Control Method Including Virtual Train Stop"); 16/778,529 ("Ultra-Wideband Work Train Protection"); and 16/778,595 ("Ultra-Wideband Based Vital Train Tracking").

24. After the original Complaint was filed, Siemens allowed the 16/516,456 application to issue as a granted U.S. patent.

25. Other Defendants have filed later in time applications attempting to claim Metrom's inventions as well. Piper filed application number 17/014,974, "Enhanced Transit Location Systems And Methods", on September 8, 2020, claiming priority to a provisional filed on September 9, 2019, and published on March 11, 2021 as US Publication No. 2021/0070332. That application includes descriptive text referencing the MTA. A reasonable opportunity for discovery is likely to show other examples as well.

26. Defendants' declarations and course of prosecution in its previously filed cases, filed with knowledge of Metrom's patent position, are admissions by their agents that Metrom's earlier patents directed to the same inventions are not

obvious or anticipated in view of art that Defendants were aware of when the later applications were filed.

27. Metrom's initial "Proof of Concept" demonstrations of Metrom's technology to the MTA in 2017 and 2018 were compelling. Metrom's solutions were awarded "Genius" prizes by the MTA, and were so compelling that Metrom's technology and architecture was the basis for the MTA's first large scale pilot demonstration RFP in 2019 for upgrading the decaying MTA signal infrastructure.

28. Metrom's general equipment arrangement is shown below, including power, operator interface, dual redundant controllers, vehicle host interface, vehicle interface, and UWB radio modules:

29. Metrom's advanced train control solutions are the subject of a number of Metrom patent applications, including the application issued as U.S. Patent No. 10,778,363 on September 15, 2020.

30. Thales, historically the second source for MTA train control equipment, engaged with Metrom on a proof of concept demonstration using UWB in 2018 after Metrom was selected as a "Genius" winner by the MTA.

31. Siemens did not do a Proof of Concept demonstration using UWB, but did convince Metrom to join with Siemens in an unsolicited joint proposal to the MTA for a train control system for the MTA "Lexington" line, using Metrom's technology.

32. Late in 2018, the MTA asked Metrom to submit its own proposal based on Metrom's Proof of Concept demonstrations, for the next "pilot demonstration phase."

33. The MTA's pilot demonstration RFP then issued with a series of amendments between January 15 and February 7, 2019, also referred to herein as the "Pilot RFP" or "NYCT RFP." The RFP, No. W-81199, was based on Metrom's pioneering system design.

34. Because the MTA requested a bid from Metrom as the prime contractor, Metrom responded to the RFP with Hitachi as a subcontractor. Siemens and Thales submitted as prime contractors but lacked any significant experience with UWB signaling as contemplated by Metrom's winning architecture and partnered with UWB radio suppliers as subcontractors. Siemens partnered with Defendant

Humatics, and Thales partnered with Defendant Piper to submit bids. Siemens/Humatics, Thales/Piper, and Metrom were the only three bidders for the Pilot RFP. Of the three bidders, Siemens had done no proof of concept demonstrations using UWB, only Metrom had actually demonstrated the solution called for by the RFP, and Thales had previously done a proof of concept with Metrom.

35. In February of 2018, Defendant Humatics acquired a company known as "5D", which had in turn acquired a company known as "Time Domain". Time Domain was a long-time manufacturer of UWB radios, was Metrom's supplier for UWB radios for at least the prior five years, and was accordingly familiar with Metrom's unique requirements and specifications for the railroad environment.

36. Despite Metrom's pioneering patent position and first mover technical leadership, however, the MTA awarded the Pilot RFP to its entrenched incumbent signal equipment suppliers, Defendants Siemens and Thales. While the final award removed some aspects of Metrom's Proof of Concept system to make it easier for Siemens and Thales to comply with the bid requirements, the MTA retained features developed, proven, demonstrated, and patented by Metrom.

37. Siemens has a history of using improper means to secure business. In 2008, Siemens was fined $800,000,000 by the SEC for violations of US law in

connection with the payment of bribes to foreign officials, and ultimately eight Siemens executives and agents were charged with violations of the FCPA. https://www.justice.gov/opa/pr/eight-former-senior-executives-and-agents-siemens-charged-alleged-100-million-foreign-bribe.

38. A reasonable opportunity for discovery is likely to show that Siemens evades MTA rules on lobbying and doing business with the MTA by former employees, by having former MTA or Siemens employees establish themselves as consultants, funding their businesses with agreements with Siemens, and then using them to lobby the MTA on issues of interest to Siemens.

39. Siemens is motivated to maintain the status quo and exclude a disruptive supplier. Siemens or its affiliates have 2,500 employees in New York, with a large number of them dedicated to supporting an enormous installed base of unreliable, obsolete, and expensive legacy signal equipment for the MTA.

40. A reasonable opportunity for discovery is likely to show that one or more Defendants conspired with the RFP authors to alter the RFP and issue an RFP "addendum" favorable to Siemens, which was intentionally withheld from Metrom so that Metrom had no opportunity to timely amend Metrom's proposal.

41. A reasonable opportunity for discovery is likely to show that Siemens has acquired dominance in the market for signaling equipment for the MTA; and its

practices in writing equipment specifications and RFPs for the MTA, contracting with former employees of the MTA, and appropriating the technology of disruptive competitors has stifled competition in that market.

42. Siemens and Thales have worked together in the past to supply compatible and inter-operable equipment to the MTA for train control.

43. Siemens and Thales conspired with their partners Humatics and Piper to mimic Metrom's technology and take the MTA UWB signaling business.

44. Metrom promptly protested the award of the Pilot Project on various grounds, including the facts that Metrom had an exclusive IP position in the system that the RFP requested bids for, Defendants had no demonstrated history or experience in fielding UWB based controls for a rail system, and Defendant Siemens had not participated in any UWB proof of concept system for the MTA or any other customer at any time. Metrom's protest was not successful.

45. A reasonable opportunity for discovery is likely to show that Metrom was not the high bidder, and also that during the bidding process, Siemens obtained information at least about Metrom's bid amount.

46. A reasonable opportunity for discovery is likely to show that as Defendants gained experience with UWB implementation, the Defendants have

offered more features covered by Metrom's patents, and that as the MTA builds out its new signaling infrastructure, Defendants will supply or intend to supply those features, or are promising to supply them in order to keep the entirety of the MTA signal business for themselves. Unless enjoined, the total value of those contracts over time is expected to reach over seven billion dollars.

47. A reasonable opportunity for discovery is likely to show that Defendants are preparing to bid on the first complete signal replacement of one or more of New York's 15 subway lines, at an estimated cost on the order of $200-400 million per line.

48. Future complete signal replacement RFPs will be a continuation of the Pilot Project, with the winning bidder required to implement Metrom's proprietary, patented technology, as demonstrated by the Pilot Project, to deliver all of the features sought by the MTA as the MTA eventually replaces all of the signaling on all of its New York City Transit lines with systems covered by Metrom's patent claims.

49. A reasonable opportunity for discovery is likely to show that the systems Defendants are offering will be capable of implementing additional features covered by Metrom's patents, and that the future capability to implement those

features are offered for sale by Defendants and are a material aspect of Defendants' bids and the MTA's selection.

50. The MTA accounts for 60% of the dollars spent on transit infrastructure in the United States each year and has plans to spend over 7 billion dollars in the next few years on new signaling and train control systems. Without an injunction against the Defendants, Defendants will have permanently displaced Metrom and all other competitors from the single largest market for Metrom's technology, depriving Metrom of not just the initial sales of signal equipment but ongoing maintenance and support, as well as a reference installation that is an invaluable sales tool for convincing other transit agencies to adopt Metrom's technology.

51. Because the New York MTA alone comprises more than half the market in the U.S. for signaling equipment for dedicated rail transit systems, MTA suppliers acquire an immediate advantage over competitors in scale and first mover advantage, since other metro rail systems look to the MTA for reference designs.

52. Defendant Siemens is already a dominant participant for signal equipment for the MTA, with Thales consistently taking a minority share to satisfy "dual source" requirements. A reasonable opportunity for discovery is likely to show that Siemens has consistently taken 60-70% of the MTA's train control business annually, with Thales accounting for the balance, and as a practical matter because

Siemens and Thales control the specifications for train control opportunities, it is very difficult for a small innovator to bid on subsequent follow-on orders for those systems.

53. Nationally, Siemens is by far the largest market participant for signaling equipment sold to transit agencies for heavy rail. Siemens' patent infringement has allowed Siemens to maintain its duopoly for MTA signal equipment, and raises a dangerous probability that Siemens will obtain a monopoly position in the balance of the U.S. transit agency heavy rail market for advanced signaling systems. Defendants' actions have suppressed the technical pioneer for UWB train control from the U.S. railway mass transit market, raised prices for advanced signaling systems, and slowed the adoption of a disruptive technology.

54. The Pilot and the MTA's future signal replacement program based on the Pilot are exemplary of Defendants infringement but not exclusive. The Defendants are offering the accused systems, or equivalent systems, to other municipal agencies and operators.

55. The monetary and business damage to Metrom, absent an injunction, is enormous, potentially threatening Metrom's survival as a company and is irreparable if allowed to continue. A preliminary injunction is necessary to preserve the status

quo and allow Metrom to compete for the delivery of the very systems that Metrom pioneered.

56. Defendants, and their customer the MTA, have actual notice of Metrom's patent rights, including at least by correspondence from Metrom dated June 24, 2019. That letter explicitly identified the '227, '131, and '595 patents, and the applications that led to the '363 and '709 patents. A reasonable opportunity for discovery is likely to show that Defendants have monitored Metrom's patent activity, submitted art anonymously in pending patent applications, and agreed to indemnification agreements specifically concerning Metrom's patent rights. A reasonable opportunity for discovery is also likely to show that Metrom's patents have been cited against Siemens' attempts to apply for "me to" patents based on Metrom's demonstrations to the MTA of novel control solutions, and that one or more Defendants has monitored Plaintiff's website that lists Metrom's patents at https://metrom-rail.com/patents. A reasonable opportunity for discovery is likely to show that Defendants were aware of Metrom's bid protest and Metrom's position with the MTA that compliance with the MTA's RFP would require infringing Metrom's IP rights. Defendants have attempted to conceal their infringement by frustrating Metrom's FOIL requests for their responses to the Pilot RFP, and continuing to refuse to provide those responses after the Metrom brought this action.

57. Despite their knowledge of Metrom's patent rights, Defendants did, and a reasonable opportunity for discovery is likely to show will, continue with the acts complained of, knowing and with the intent to have the MTA purchase systems that infringe or would be used by the MTA to infringe Metrom's patent rights.

58. Exhibit F is a true and correct copy of a Piper press release taken from Piper's web site.

59. Exhibit G is a true and correct copy of a Humatics brochure taken from Humatic's website.

60. Exhibit H is a true and correct copy of a Humatics sales sheet taken from Humatic's website.

61. Exhibit I is a true and correct copy of a Piper sales sheet taken from Piper's website.

62. Exhibit J is a true and correct copy of another Piper sales sheet taken from Piper's web site describing Piper's "ELTS" as Piper's contribution to the Pilot Project.

63. Exhibit K is a true and correct copy of another Piper sales sheet taken from Piper's web site describing Piper's "Helix" collision avoidance and worker protection offering.

64. Exhibit L is a Piper web page recovered from an Internet archive.

NATURE OF THE DEFENDANTS INFRINGEMENT

65. Defendants Siemens and Thales are direct infringers under 35 U.S.C. § 271(a) by offering for sale, and then selling, the Pilot project systems to the MTA. Siemens and Thales each obtained contracts for Pilot demonstration projects in response to a single RFP by the MTA that set out the requirements for a system. (MTA contract number W-81199-1 and -2). Because both Siemens and Thales had to comply with a common set of requirements set out in RFP No. W-81199, they effectively are offering and selling the same system to the MTA and are both working to satisfy the needs of their common customer, and to the extent that the two original Pilot demonstration systems are not identical, the differences are not material for purposes of infringing the asserted patents.

66. Siemens and Thales cooperation on the Pilot project, and on the future signal replacement projects that will follow, is ongoing. In July of 2021, the MTA awarded contracts to Siemens/Humatics and Thales/Piper to further integrate their respective offerings and ensure the interoperability, if not the outright exchangeability, of the components of their supply. The MTA and Defendants combine Defendants' systems to operate an MTA system including the systems of all Defendants ("MTA System").

67. Defendants Humatics and Piper are direct infringers under 35 U.S.C. § 271(a) by offering for sale and selling the Pilot project systems to the MTA in conjunction with their partners, Siemens and Thales, respectively, with the completed sale being by Siemens and Thales with Humatics and Piper as subcontractors.

68. All defendants are contributory infringers under 35 U.S.C. §271(c). Humatics and Piper both at least provide onboard and wayside UWB radios and on vehicle controllers especially adapted to infringe, as described further herein. Siemens and Thales in turn, integrate that equipment for the MTA, as well as supply additional equipment that is customized for the MTA in order to infringe. For example, Siemens and Thales have been awarded contracts totalling over 22 million dollars for Humatics to redesign its UWB radios to use Piper's "Qorvo" chip set and for Humatics and Piper to provide common interfaces to ensure the interoperability of Thales/Piper equipped trains with Siemens/Humatics wayside equipment and vice versa. The UWB radio and command interfaces will be interchangeable between Siemens/Humatics and Thales/Piper, and are not staple articles or commodities with a substantial noninfringing use.

69. All defendants are direct infringers under 35 U.S.C. § 271(a) by offering for sale the "Pilot" system or the "Pilot" system with additional features for future large scale, line signalling replacements for the MTA.

70. A reasonable opportunity for discovery is likely to show that all Defendants are direct infringers under 35 U.S.C. § 271(a) by offering for sale systems claimed by the patents in Counts I-V to other transit agencies or rail operators in the United States.

71. All Defendants are inducers under 35 U.S.C. §271(b) because the MTA's use of the Pilot systems is known to be infringing both by virtue of the original complaint and for all the reasons that Defendants' infringement is also willful. To the extent that any limitation from the asserted claims is not supplied by a single Defendant, the Defendants act in concert to induce the MTA to use the infringing combination, knowing that the MTA's use infringes Metrom's patents.

72. In the claim charts that follow, Metrom identifies a response in the Defendants' systems for each limitation of each identified claim, and each row is an allegation under Fed. R. Civ. P. 8(b)(1)(B) that must be admitted or denied.

COUNT I – PATENT INFRINGEMENT, U.S. PATENT NO. 10,778,363, 35 U.S.C. § 281 – ALL DEFENDANTS

73. The allegations in the preceding paragraphs are incorporated herein.

74. This claim is brought under 35 U.S.C. § 281 and the court has original and exclusive jurisdiction under 35 U.S.C. § 1338.

75. Metrom is the owner of duly issued U.S. Patent No. 10,778,363 ("'363 patent") (Exhibit A) titled "Methods And Systems For Decentralized Rail Signaling And Positive Train Control" and has been the owner at all times material to this claim.

76. Defendants Siemens and Thales are coordinating the installation and maintenance of a rail signaling system using UWB to enable positive train control and other features for the MTA, with their UWB partners Defendants Humatics and Piper, respectively. The ongoing offer and sale of that system includes the "Pilot" project described by the NYCT RFP, ongoing collaboration between the defendants to coordinate their offerings with each other and the MTA's requirements, and a planned series of contracts for full scale implementation scheduled to be awarded from 2022 forward are referred to herein as "Defendants' system" or "MTA UWB System".

77. The technical details of the Defendants' current supply for the MTA Pilot are not publicly available, other than the initial bid solicitation from the MTA. Metrom requested details of Siemens and Thales bid responses on Pilot project under New York's Freedom of Information Law (FOIL), but both companies objected to

those requests. Both companies also declined to provide their bid responses after Metrom requested them prior to filing the First Amended Complaint. However, both Siemens-Humatics and Thales-Piper supplied systems for the Pilot that met the common specification provided by the MTA, and the MTA has a requirement that the solutions provided by Siemens-Humatics and Thales-Piper be interoperable, so that trains equipped by Siemens-Humatics can run on tracks equipped by Thales-Piper and vice-versa.

78. A minimum requirement of the MTA Pilot and subsequent projects is to provide a UWB based train control system, which offers Automatic Train Operation (ATO) and Automatic Train Protection (ATP) while utilizing UWB as the primary source for speed and position determination.

79. Siemens and Thales, as the system integrators and lead contractors on the Pilot and on any subsequent signal replacement projects, are the seller of the Pilot system, and are offering to sell the follow on line replacements for the MTA. Humatics and Piper are offering to sell infringing systems to the MTA in partnership with Siemens and Thales, and to agencies and operators other than the MTA, and a reasonable opportunity for discovery is likely to show that Siemens and Thales are as well.

80. Where implemented on the MTA, the system will infringe at least one claim of the ’363 patent, either literally or by equivalence, either alone or as installed in the MTA System. The following table[1] recites each limitation of at least one claim and the corresponding response in the Defendants’ system:

Claims 1-8, 10, 12-14 of the ’363 patent	**Defendants’ System**
1. A system for providing decentralized control operations in a railway network, the system comprises:	The MTA UWB system is designed to operate so that the local vehicle controller can pre-empt operation of the train without receiving train command and control information from a centralized system, and the functionality is implemented at the vehicle level. Both Siemens (with Humatics) and Thales (with Piper) have installed pilot demonstration systems on the MTA, and a reasonable opportunity for discovery is likely to show that the Thales-Piper combination is equivalent to the Siemens-Humatics installation. Piper press release, January 29, 2020 (Exhibit F).
a. a plurality of wayside units, each configured for placement on or near tracks in the railway network; and	The MTA UWB system includes a plurality of wayside units, called “beacons” or “anchors.”

[1] The documents from which the figures and quotes are taken are attached as Exhibits G-L.

Claims 1-8, 10, 12-14 of the ’363 patent	Defendants’ System
	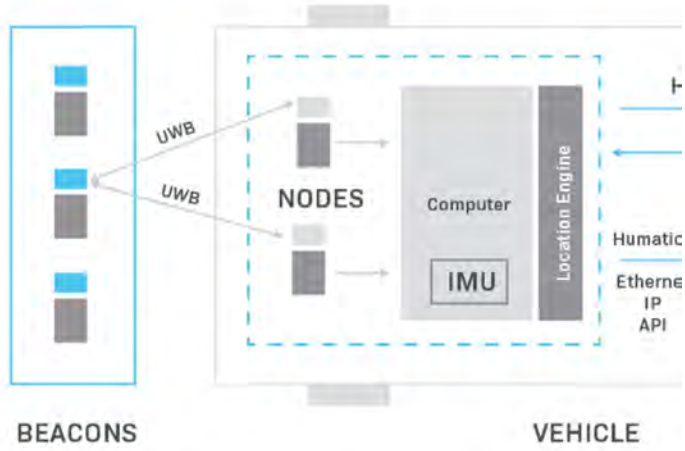
b. one or more train-mounted units, each configured for deployment on a train operating in the railway network;	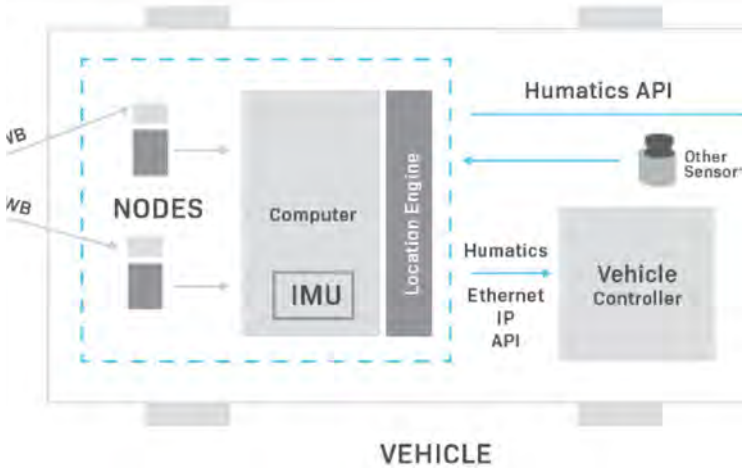
c. wherein each train-mounted unit is configured to: communicate with any wayside unit or other train-mounted unit that comes within communication	Humatics' Rail Navigation System operates similarly to satellite positioning serving as "terrestrial satellites" and works by continually ranging from carborne beacons to a constellation of UWB beacons. Given this architecture, UWB ranging is especially well-suited to augment GNSS positioning on sections of track with poor or no signal reception such as urban canyons and tunnels. AUTOMATIC TRAIN OPERATION (ATO) Train-to-train UWB ranging provides the ultra-precise high-frequency relative positioning information necessary for vehicle platooning. In addition, train-to-train UWB communication enables the synchronization of braking and traction between trainsets.

Claims 1-8, 10, 12-14 of the ’363 patent	Defendants’ System
range of the train-mounted unit,	
d. wherein the communicating comprises use of ultra-wideband (UWB) based signals; and	Through its high-availability and ultra-precise UWB localization network, Humatics enables safety-critical train positioning in all conditions, unlocking a variety of applications including automatic train operations, platooning, advanced driver assistance, platform door control, roadway worker safety, and emergency location services.
e. generate based on the communication, control information configured for use in controlling one or more functions of the train in conjunction with operation in the railway network,	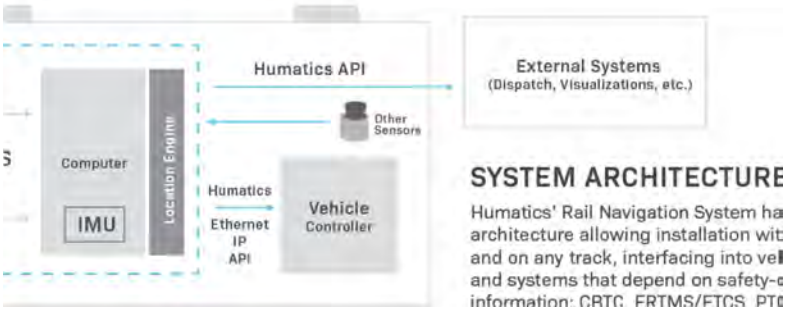 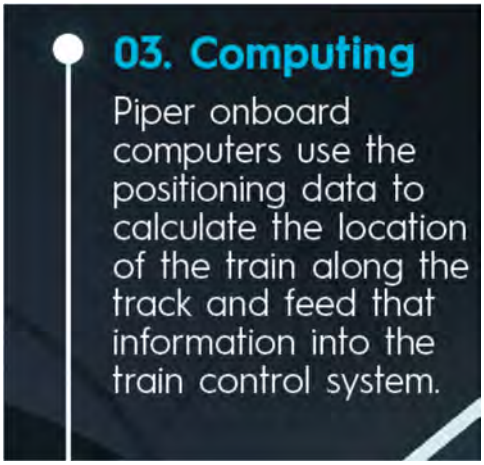
f. wherein generating the control information comprises or is based on	2. Precise sub-10cm safety-critical positioning at high speed in all weather conditions

Claims 1-8, 10, 12-14 of the '363 patent	Defendants' System
obtaining ranging measurements, and	**Results** Piper successfully demonstrated a system which utilized UWB and enabled the greater CBTC system to provide Automatic Train Protection (ATP) and Automatic Train Operation (ATO) functions as defined in the Technical Specification. The system demonstrated no interruptions to the certified interfaces with the ATS and SSI subsystem. While the technical specification called for a system which provided positional accuracy of 6-inches (15.24 cm) while stationary and 12-inches while in motion (30.48cm), Piper was able to far exceed this requirement by demonstrating a system which reliably and continuously provided a positional accuracy between 2 to 4-inches. Piper also substantially exceeded the requirement
g. wherein obtaining the ranging measurements comprises: broadcasting ultra-wideband (UWB) based signals within a wireless range of the train-mounted unit,	**How It Works** To provide precise speed and position, the Humatics Rail Navigation System UWB beacons installed along the wayside of the track continuously range to the Humatics UWB beacons on the train. Humatics combines these UWB ranges with Inertial Measurement Unit (IMU) data to create robust real-time location, position, and speed data which seamlessly integrates with a train control system. • **Piper UWB Anchors** are installed wayside on tunnel walls or on survey markers of elevated tracks. These anchors detect the tags in the trains using UWB radio signals. Each anchor detects multiple tags simultaneously and uses a Time-of-Flight algorithm to calculate the changing distance between the anchor and the tags in real-time.
h. the UWB based signals comprising information identifying the train-mounted unit;	The UWB based signals include information that identifies the train-mounted unit.

Claims 1-8, 10, 12-14 of the ’363 patent	Defendants’ System
i. selecting based on received responses to the broadcast UWB based signals, one or more of the plurality of wayside units; and	The car borne units select from the responses received, one or more of the plurality of wayside units, each of which has a known location in the system. Humatics “success story” MTA video at 1:14 to 1:30, taken from the web at https://www.humatics.com/products/humatics-rail-navigation-system Piper “Vital UWB Train Positioning” video at 1:45 to 3:00, taken from the web at https://www.pipernetworks.com/asset-tracking-rtls-solutions/#uwb
j. determining ranging information corresponding to each of the one or more wayside units, based on ultra-wideband (UWB) based signals communicated respectively with each of the one or more of the plurality of wayside units.	The car borne system determines a range to each of the wayside units detected. Humatics “success story” MTA video. Piper “Vital UWB Train Positioning” video.

Claims 1-8, 10, 12-14 of the ’363 patent	Defendants’ System
2. The system of claim 1, wherein the train-mounted unit is configured to generate at least part of the control information based on sources other than processing of the ultra-wideband (UWB) based signals.	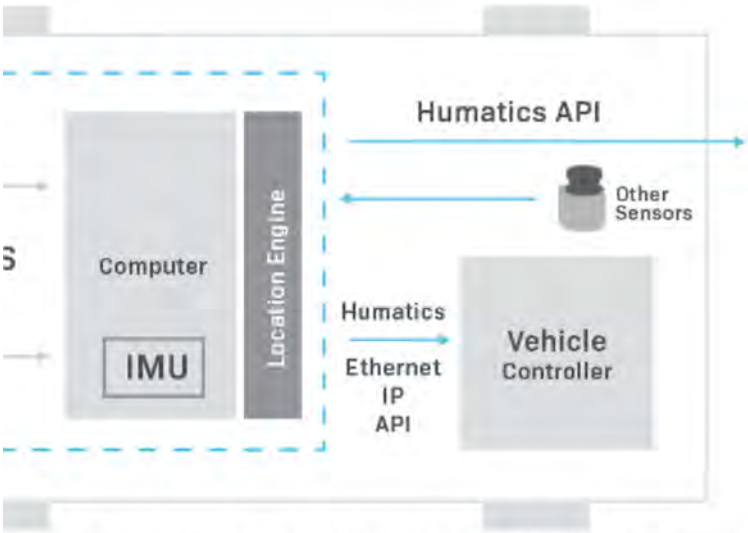 Flexible sensor fusion with GNSS, Lidar, Eurobalise, and other commonly used odometry technologies The Piper system adds Lidar or GPS information to the UWB ranging information.
3. The system of claim 2, wherein the train-mounted unit is configured to: assess based on the processing of the ultra-wideband (UWB) based signals, one or more conditions relating to operation of the train within the railway network; when at least one condition meets one or more particular criteria,	The train mounted unit determines the location of the train based on the UWB signals, and when the location is such that a safety envelope for braking is violated, responds by automatically braking the train. b. UWB-based Train Control System is defined as a Train Control System which offers some form of ATO and ATP while utilizing UWB as the primary source for Speed and Position determination, at a minimum. NYCT RFP p.22.

Claims 1-8, 10, 12-14 of the ’363 patent	Defendants’ System
determine one or more responsive actions; and perform or cause performing each of the one or more responsive actions.	
4. The system of claim 3, wherein, when the one or more responsive actions comprise providing indication or feedback, relating to the at least one condition, to a train operator, the train-mounted unit is configured to: monitor actions of the train operator; assess based on the monitoring, the train operator's compliance with at least one expected subsequent responsive action; and when the train operator fails to do so, directly perform the at least one expected	See dependent claim 3; the train mounted unit provides feedback to the train operator indicating that braking should commence, and instituting braking if the operator does not institute braking. The Defendants also at least offer for sale the user interface to allow communication with and input from the train operator. **DRIVER ASSISTANCE SYSTEMS** Integrate with the onboard Train Control & Management System (TCMS) and Driver Machine Interface (DMI) to provide situational awareness and enable precision stops at platforms. Provide zero-speed signal and train type information to SIL-4 door controllers. **Results** Piper successfully demonstrated a system which utilized UWB and enabled the greater CBTC system to provide Automatic Train Protection (ATP) and Automatic Train Operation (ATO) functions as defined in the Technical Specification. The system demonstrated no interruptions to the certified interfaces with the ATS and SSI subsystem. While the technical specification

Claims 1-8, 10, 12-14 of the ’363 patent	Defendants’ System
subsequent responsive action or perform an alternative action.	
5. The system of claim 1, wherein the train-mounted unit is configured for utilizing non-UWB based signals for communicating at least some data with the wayside unit and/or another train-mounted unit.	The Defendants’ system also communicates with legacy “zone controllers” that pass information to a central control point and to other trains.
6. The system of claim 1, wherein the train-mounted unit is configured for handling radio-frequency identification (RFID) based signals with RFID devices used within the railway network.	The Defendants’ system receives input from RFID tags embedded in the MTA System at predetermined locations in the rail network.
7. The system of claim 1, wherein the train-mounted unit is configured for handling satellite based signals.	The Defendants’ system includes GPS/GNSS receivers on the trains.

Claims 1-8, 10, 12-14 of the ’363 patent	Defendants’ System
8. The system of claim 7, wherein the train-mounted unit is configured for obtaining from received satellite based signals information, and generating or adjusting the control information based on the obtained information.	The Defendants’ system incorporates GPS/GNSS information into the “location engine.” 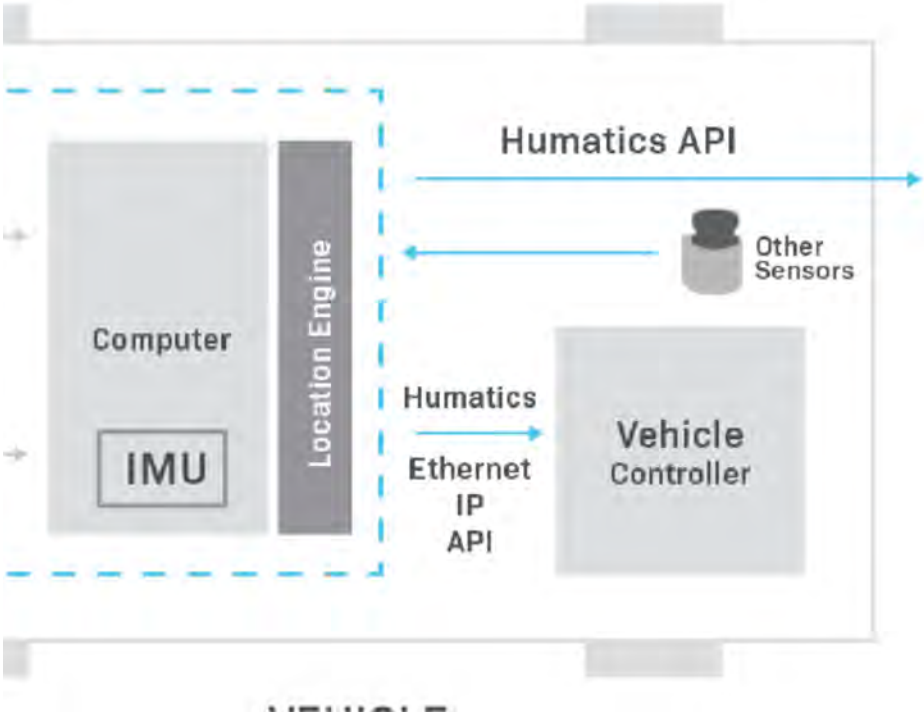 a constellation of UWB beacons. Given this architecture, UWB ranging is especially well-suited to augment GNSS positioning on sections of track with poor or no signal reception such as urban canyons and tunnels.
10. The system of claim 1, comprising one or more input/output (I/O) components, for receiving input from an operator of the train and/or for providing	The Defendants’ system provides for input/output to the train operator.

Claims 1-8, 10, 12-14 of the ’363 patent	Defendants’ System
output to the operator of the train.	
12. The system of claim 1, wherein the train-mounted unit is configured for communicating, directly or via at least one of the wayside unit and another train-mounted unit, with one or more other components or devices in the railway network, the one or more other components or devices in the railway network not being part of decentralized train control system.	The Defendants’ system includes an interface to the MTA’s centralized train control system.
13. The system of claim 1, wherein the train-mounted unit is configured to substantially continually determine absolute position of the train, based on the ranging information	The Defendants’ system determines position substantially continuously using UWB ranging information, down to as little as 10cm or less. 2. Precise sub-10cm safety-critical positioning at high speed in all weather conditions

Claims 1-8, 10, 12-14 of the ’363 patent	Defendants’ System
obtained from ranging with wayside units.	
14. The system of claim 13, wherein the train-mounted unit is configured to determine the absolute position of the train based on the ranging information and positioning information obtained without ranging to wayside units.	The Defendants’ system also incorporates information from other sensors, such as RFID tags, GNSS (GPS), LIDAR, and odometry, which are fed into the train mounted “location engine.”

81. Defendants directly infringe the claims by offering and selling their UWB systems and related components to the MTA, and indirectly infringe by aiding and abetting the MTA in the operation of those systems and aiding and abetting the MTA in the operation of the MTA System.

82. A reasonable opportunity for discovery is likely to show that Defendants are offering their infringing system for sale to other transit agencies and using the Pilot project installations as a reference.

83. Defendants are also contributory infringers, because the components sold by Defendants for installation in the MTA System are customized for the MTA's unique requirements and have no substantial non-infringing use.

84. Metrom is entitled to damages adequate to compensate Metrom for Defendants' infringement, as provided by 35 U.S.C. § 284 and in no event less than a reasonable royalty.

COUNT II – PATENT INFRINGEMENT, U.S. PATENT NO. 8,812,227, 35 U.S.C. § 281 – ALL DEFENDANTS

85. The allegations in the preceding paragraphs are incorporated herein.

86. This claim is brought under 35 U.S.C. § 281 and the court has original and exclusive jurisdiction under 35 U.S.C. § 1338.

87. Metrom is the owner of duly issued U.S. Patent No.8,812,227 ('227 patent) (Exhibit B) titled "Collision Avoidance System for Rail Line Vehicles" and has been the owner at all times material to this claim.

88. Defendants are including in their offers and solicitations to the MTA and others, collision avoidance features that will warn and prevent train operators from colliding with other trains, using UWB technology pioneered by Metrom, with a significantly higher degree of precision than was possible with prior systems.

89. Collision avoidance is of great interest to the MTA, and a reasonable opportunity for discovery is likely to show that the future availability of this feature with no or minimal hardware changes to the Defendants' installed systems is a factor in awarding contracts to the Defendants.

90. Metrom's '227 patent covers the collision avoidance features that Defendants have offered for sale, will sell, and operate in a UWB system for the MTA, as shown in the following table, either literally or by equivalence, either alone or as installed in the MTA System:

Claims 1-2, 7-10, 12-13, 17-18, 21-27 of the '227 Patent	**Defendants' System**
1. A collision avoidance system comprising:	The MTA UWB system is a collision avoidance system. Both Siemens (with Humatics) and Thales (with Piper) have installed pilot demonstration systems on the MTA, and a reasonable opportunity for discovery is likely to show that the Thales-Piper combination is equivalent to the Siemens-Humatics installation. Piper press release, January 29, 2020 (Exhibit F).

Claims 1-2, 7-10, 12-13, 17-18, 21-27 of the '227 Patent	Defendants' System
a. one or more vehicle mounted modules, each vehicle mounted module mountable on a rail vehicle, each vehicle mounted module comprising:	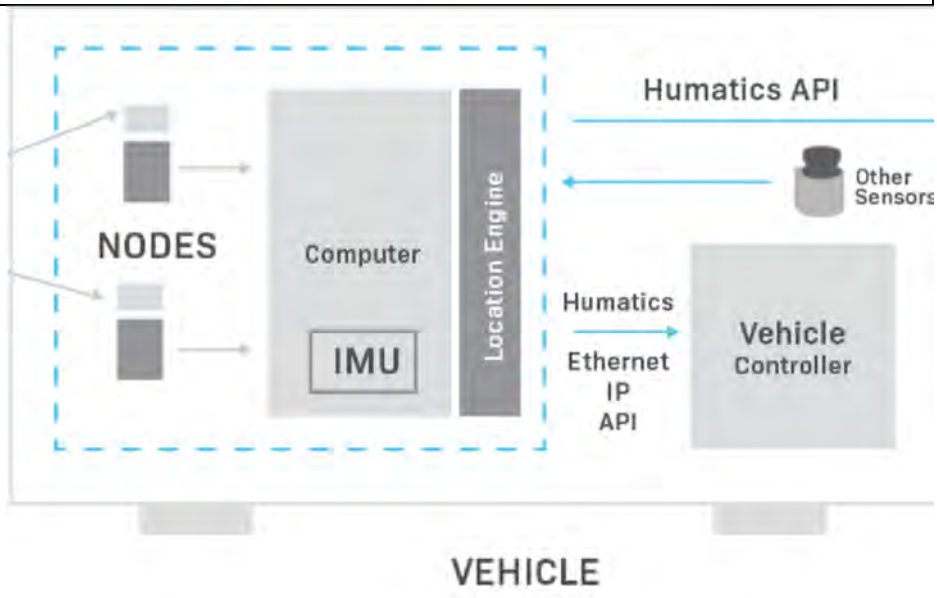
b. a transponder sensor module operable to send and receive data wirelessly, the transponder module comprising a first ultra wideband unit and a first antenna;	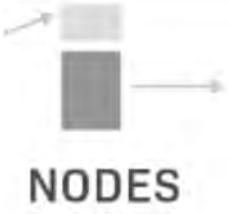

Claims 1-2, 7-10, 12-13, 17-18, 21-27 of the '227 Patent	Defendants' System
c. a control electronics module comprising a processor in communica-tion with at least the transponder sensor module unit; and	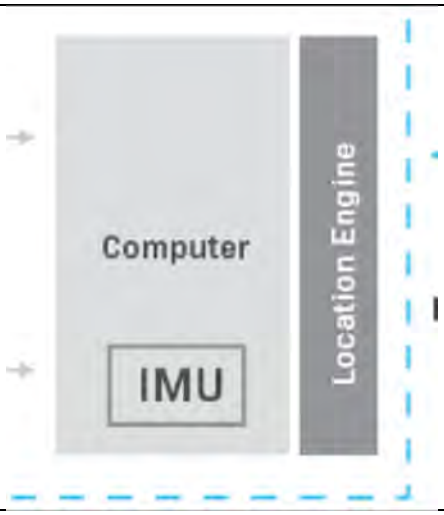
d. a user interface module including a user interface, the user interface being operable to provide rail vehicle information to a vehicle operator and to receive input from the vehicle operator; and	The Defendants' system includes a user interface module mounted on the vehicle, that provides information to an operator and can also receive control information from the operator. 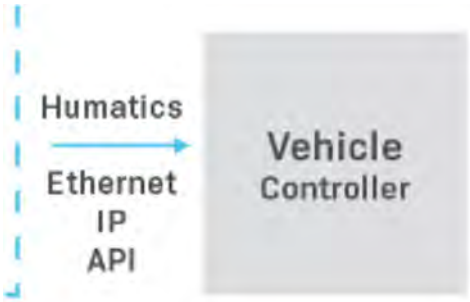 DRIVER ASSISTANCE SYSTEMS Integrate with the onboard Train Control & Management System (TCMS) and Driver Machine Interface (DMI) to provide situational awareness and enable precision stops at platforms. Provide zero-speed signal and train type information to SIL-4 door controllers.
e. wherein each vehicle mounted module is operable to	The vehicle mounted modules will communicate with and range to any other vehicle mounted module that is within range.

Claims 1-2, 7-10, 12-13, 17-18, 21-27 of the ’227 Patent	Defendants’ System
communicate with at least one other vehicle mounted module mounted on at least one other rail vehicle, and	
f. wherein each vehicle mounted module is operable to apply a time of flight technique to determine a separation distance between the rail vehicles.	Defendants’ system determines this distance, based on a time of flight technique between UWB radios.
2. The collision avoidance system of claim 1, further comprising a central tracking unit in communication with the first vehicle mounted module and the second vehicle mounted module,	The Defendants’ system also tracks train location centrally, using an external communications system.

Claims 1-2, 7-10, 12-13, 17-18, 21-27 of the ’227 Patent	Defendants’ System
wherein the central tracking unit is operable to track the location of at least the first vehicle mounted module and the second vehicle mounted module.	
7. The collision avoidance system of claim 1, wherein the first vehicle mounted module further comprises a global positioning system unit, the global positioning system unit operable to receive information from one or more satellites to determine an absolute position of the rail vehicle, wherein the global positioning system unit is in communication with the control electronics module.	The Defendants’ system includes an “other sensor” that is a GNSS/GPS position input. a constellation of UWB beacons. Given this architecture, UWB ranging is especially well-suited to augment GNSS positioning on sections of track with poor or no signal reception such as urban canyons and tunnels.

Claims 1-2, 7-10, 12-13, 17-18, 21-27 of the ’227 Patent	Defendants’ System
8. The collision avoidance system of claim 7, wherein the first vehicle mounted module receives information generated by the global positioning system unit and the first ultra wideband unit to determine whether one or more vehicle separation criteria are violated, and generates a warning signal when one or more vehicle separation criteria are violated.	The Defendants’ system includes an “other sensor” that is a GNSS/GPS position input. a constellation of UWB beacons. Given this architecture, UWB ranging is especially well-suited to augment GNSS positioning on sections of track with poor or no signal reception such as urban canyons and tunnels. The Defendants’ system will use GNSS data to supplement position information to avoid a collision.
9. The collision avoidance system of claim 1, wherein the first vehicle mounted module is operable to execute a progressive warning signal if one or more vehicle separation	A reasonable opportunity for discovery is likely to show that the in vehicle operator warnings are progressive.

Claims 1-2, 7-10, 12-13, 17-18, 21-27 of the '227 Patent	Defendants' System
criteria are violated, and	
a. wherein the progressive warning signal increases in at least one of signal rate, signal frequency, signal prominence, signal volume, or signal severity as the violation of the vehicle separation criteria approaches or extends beyond a vehicle separation threshold.	A reasonable opportunity for discovery is likely to show that the progressive warning is based on one of these properties (rate, frequency, volume, severity) as separation approaches or exceeds a threshold.
10. The collision avoidance system of claim 9, wherein the first vehicle mounted module executes an adaptive threshold feature that modifies one or more vehicle	A reasonable opportunity for discovery is likely to show that the threshold is adaptive, based at least in part on the speed of the vehicles.

Claims 1-2, 7-10, 12-13, 17-18, 21-27 of the ’227 Patent	Defendants’ System
separation thresholds based on the speed of the first rail vehicle and the speed of the second rail vehicle.	
12. The collision avoidance system of claim 1, further comprising an inertial measurement unit in communication with at least the control electronics module, the inertial measurement unit being operable to detect changes in the speed of the first rail vehicle.	The Defendants’ system includes an inertial measurement unit (IMU).
13. The collision avoidance system of claim 12, wherein the inertial measurement unit comprises at least one of an accelerometer or a gyroscope.	A reasonable opportunity for discovery is likely to show that the IMU includes at least an accelerometer.

Claims 1-2, 7-10, 12-13, 17-18, 21-27 of the '227 Patent	Defendants' System
17. A rail vehicle module mountable on a rail vehicle, the module comprising:	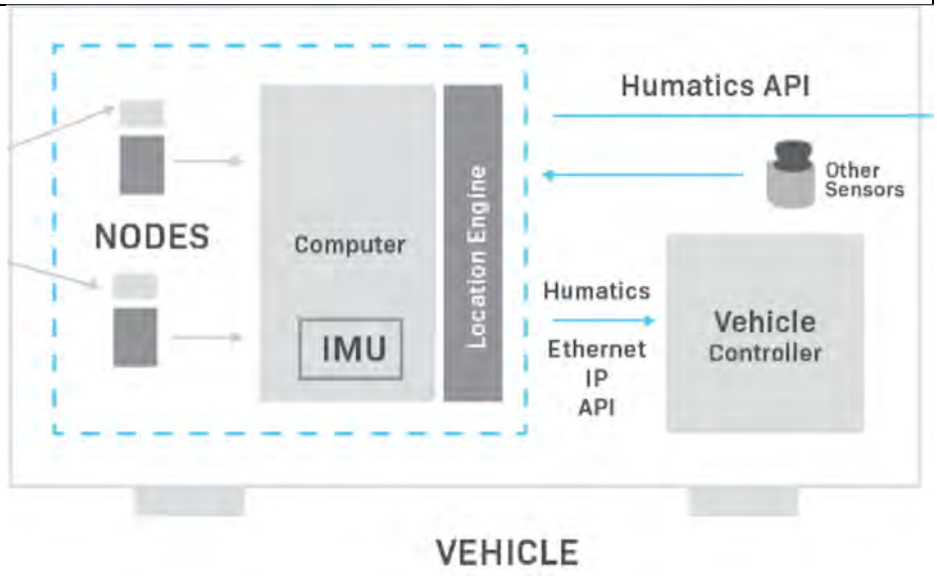
a. a transponder sensor module comprising:	The "nodes' are the transponder sensor module.
b. a radio communication unit operable to employ time of flight techniques to detect a distance between the rail vehicle and at least one other vehicle;	The nodes include an UWB, time of flight radio that detects distance to any neighboring nodes, including nodes on vehicles.
c. a wireless communications antenna operable to send and	The module includes a radio for communicating with a central system, including an over the air antenna.

Claims 1-2, 7-10, 12-13, 17-18, 21-27 of the '227 Patent	Defendants' System
receive data over the air; and	
d. a global positioning system unit operable to receive information from one or more satellites to determine an absolute position of the rail vehicle;	The Defendants' system includes an "other sensor" that is a GNSS/GPS position input. a constellation of UWB beacons. Given this architecture, UWB ranging is especially well-suited to augment GNSS positioning on sections of track with poor or no signal reception such as urban canyons and tunnels. The Defendants' system will use GNSS data to supplement position information to avoid a collision.
e. a control electronics module comprising a processor in communicatio n with at least the first transponder sensor module; and	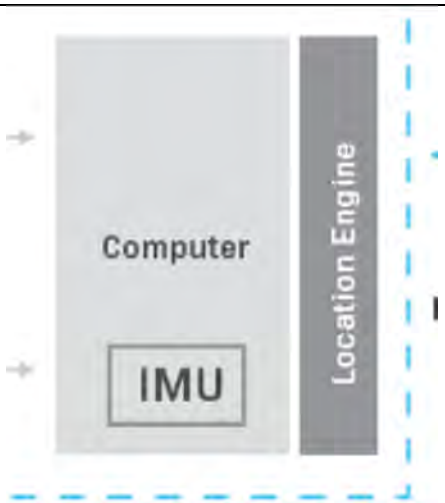
f. a user interface module including a user interface operable to provide rail vehicle information to	The Defendants' system includes a user interface module mounted on the vehicle, that provides information to an operator and can also receive control information from the operator.

Claims 1-2, 7-10, 12-13, 17-18, 21-27 of the ’227 Patent	Defendants’ System
a vehicle operator and to receive input from the vehicle operator; wherein the rail vehicle module communicates with at least one other module mounted on at least one other vehicle to detect a separation distance between the rail vehicle and the at least one other vehicle.	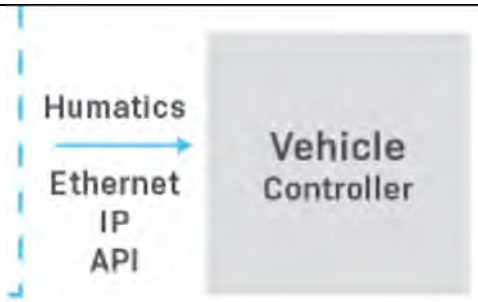 DRIVER ASSISTANCE SYSTEMS Integrate with the onboard Train Control & Management System (TCMS) and Driver Machine Interface (DMI) to provide situational awareness and enable precision stops at platforms. Provide zero-speed signal and train type information to SIL-4 door controllers.
18. The rail vehicle module of claim 17, wherein the radio communication unit comprises an ultra wideband unit configured to send and receive ultra wideband signals.	The “Nodes” are UWB units.

Claims 1-2, 7-10, 12-13, 17-18, 21-27 of the ’227 Patent	Defendants’ System
21. The rail vehicle module of claim 17, wherein the rail vehicle module is operable to utilize information generated by the radio communication unit and the global positioning system unit to determine whether one or more vehicle separation criteria are violated, and generate a progressive warning signal if one or more vehicle separation criteria are violated, wherein the progressive warning signal increases in at least one of signal rate, signal frequency, signal prominence, signal volume, or signal severity as the violation of	A reasonable opportunity for discovery is likely to show that the in vehicle warnings are progressive relative to a separation threshold.

Claims 1-2, 7-10, 12-13, 17-18, 21-27 of the ’227 Patent	Defendants’ System
the vehicle separation criteria approaches or extends beyond a vehicle separation threshold.	
22. The rail vehicle module of claim 17, further comprising a central tracking unit component, wherein the central tracking unit component is in communication with a central tracking unit component mounted on the at least one other vehicle.	The Defendants’ system also tracks train location centrally, using an external communications system.
23. The collision avoidance system of claim 16, further comprising an inertial measurement unit in communication with at least the control electronics module, the inertial measurement unit	The Defendants’ system includes an inertial measurement unit (IMU). The IMU includes an accelerometer, which detects changes in speed.

Claims 1-2, 7-10, 12-13, 17-18, 21-27 of the '227 Patent	Defendants' System
being operable to detect changes in the speed of the first rail vehicle.	
24. A collision avoidance system comprising	The MTA UWB system is a collision avoidance system. Both Siemens (with Humatics) and Thales (with Piper) have installed pilot demonstration systems on the MTA, and a reasonable opportunity for discovery is likely to show that the Thales-Piper combination is equivalent to the Siemens-Humatics installation. Piper press release, January 29, 2020 (Exhibit F).
a. one or more vehicle mounted modules, each vehicle mounted module mountable on a rail vehicle, each vehicle mounted module comprising:	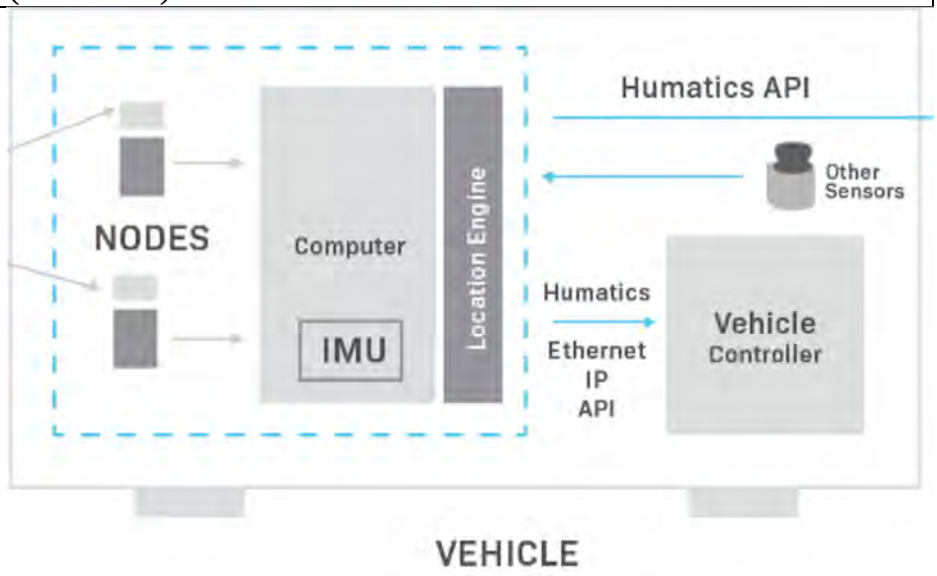
b. a transponder sensor module comprising:	The "Nodes" include a transponder sensor module.
c. a radio communication unit operable to employ time of flight techniques to detect a	Each node includes an UWB time of flight radio that measures distance to other UWB radios, including nodes mounted on other vehicles.

Claims 1-2, 7-10, 12-13, 17-18, 21-27 of the ’227 Patent	Defendants’ System
distance between rail vehicles; and	
d. a global positioning system unit operable to receive information from one or more satellites to determine an absolute position of the rail line vehicle;	The Defendants’ system includes a GNSS receiver. a constellation of UWB beacons. Given this architecture, UWB ranging is especially well-suited to augment GNSS positioning on sections of track with poor or no signal reception such as urban canyons and tunnels. The Defendants’ system will use GNSS data to supplement position information to avoid a collision.
e. a control electronics module comprising a processor, the control electronics module being in communicatio n with at least the transponder sensor module; and	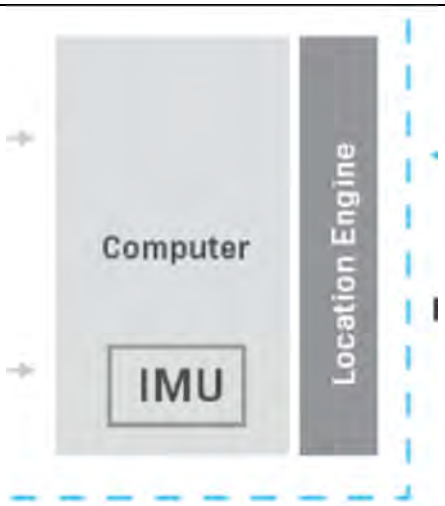
f. a user interface operable to provide rail vehicle	The Defendants’ system includes a user interface module mounted on the vehicle, that provides information to an operator and can also receive control information from the operator.

Claims 1-2, 7-10, 12-13, 17-18, 21-27 of the '227 Patent	Defendants' System
information to a vehicle operator and to receive input from the vehicle operator;	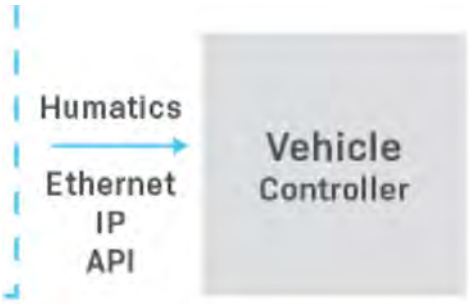 **DRIVER ASSISTANCE SYSTEMS** Integrate with the onboard Train Control & Management System (TCMS) and Driver Machine Interface (DMI) to provide situational awareness and enable precision stops at platforms. Provide zero-speed signal and train type information to SIL-4 door controllers.
g. wherein each of the two or more rail vehicle modules communicate to determine a separation distance between each rail vehicle, and wherein each rail vehicle module is operable to use information provided by the radio communicatio n unit and the	The Defendants' system combines data from neighboring nodes, including nodes on other vehicles, with GNSS data to determine separation and generate a warning if separation criteria are exceeded.

Claims 1-2, 7-10, 12-13, 17-18, 21-27 of the '227 Patent	Defendants' System
global positioning system unit to determine whether one or more vehicle separation criteria are violated, and to generate a warning signal if one or more vehicle separation criteria are violated.	
25. The collision avoidance system of claim 24, wherein each radio communication unit comprises an ultra wideband unit.	The Nodes include UWB radios.
26. The collision avoidance system of claim 24, wherein the progressive warning signal increases in at least one of signal rate, signal frequency, signal	A reasonable opportunity for discovery is likely to show that the user warnings are progressive.

Claims 1-2, 7-10, 12-13, 17-18, 21-27 of the '227 Patent	Defendants' System
prominence, signal volume, or signal severity as the violation of the vehicle separation criteria approaches or extends beyond a vehicle separation threshold.	
27. The collision avoidance system of claim 24, further comprising a central tracking unit in communication with each rail vehicle module, the central tracking unit operable to track the location of each rail vehicle module.	The Defendants' system includes a central tracking unit, that monitors the location of multiple vehicles equipped with vehicle modules. 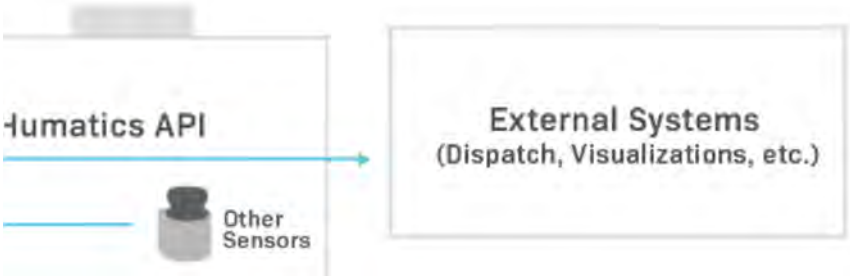

91. Defendants directly infringe the claims by offering and selling their UWB systems and related components to the MTA, and indirectly infringe by aiding and abetting the MTA in the operation of those systems and by aiding and abetting the MTA in the operation of the MTA System.

92. A reasonable opportunity for discovery is likely to show that Defendants are offering their infringing system for sale to other transit agencies and using the Pilot project installations as a reference.

93. Defendants are also contributory infringers, because the components sold by Defendants for installation in the MTA System are customized for the MTA's unique requirements and have no substantial non-infringing use.

94. Metrom is entitled to damages adequate to compensate Metrom for Defendants' infringement, as provided by 35 U.S.C. § 284 and in no event less than a reasonable royalty.

COUNT III – PATENT INFRINGEMENT, U.S. PATENT NO. 9,043,131, 35 U.S.C. § 281 – ALL DEENDANTS

95. The allegations in the preceding paragraphs are incorporated herein.

96. This claim is brought under 35 U.S.C. § 281 and the court has original and exclusive jurisdiction under 35 U.S.C. § 1338.

97. Metrom is the owner of duly issued U.S. Patent No. 9,043,131 ("'131 patent") (Exhibit C) titled "Collision Avoidance System for Rail Line Vehicles" and has been the owner at all times material to this claim.

98. Defendants are including, in their offers and solicitations to the MTA and others, collision avoidance features that will warn and prevent train operators from colliding with other trains, using UWB technology pioneered by Metrom, with a significantly higher degree of precision than was possible with prior systems.

99. Collision avoidance is of great interest to the MTA, and a reasonable opportunity for discovery is likely to show that the future availability of this feature with no or minimal hardware changes to the Defendants' installed systems is a factor in awarding contracts to the Defendants.

100. Metrom's '131 patent covers the collision avoidance features that Defendants have offered to sell, and will sell and operate, in a UWB system for the MTA, as shown in the following table, either literally or by equivalence, either alone or as installed in the MTA System:

Claims 1-2, 7-10, 12-14, 17, and 19 of the '131 patent	**Defendants' System**
1. A collision avoidance system comprising:	The MTA UWB system is a collision avoidance system. Both Siemens (with Humatics) and Thales (with Piper) have installed pilot demonstration systems on the MTA, and a reasonable opportunity for discovery is likely to show that the Thales-Piper combination is equivalent to the Siemens-Humatics installation. Piper press release, January 29, 2020 (Exhibit F).

Claims 1-2, 7-10, 12-14, 17, and 19 of the '131 patent	Defendants' System
a. a first vehicle mounted module mounted on a first rail vehicle, the first vehicle mounted module comprising:	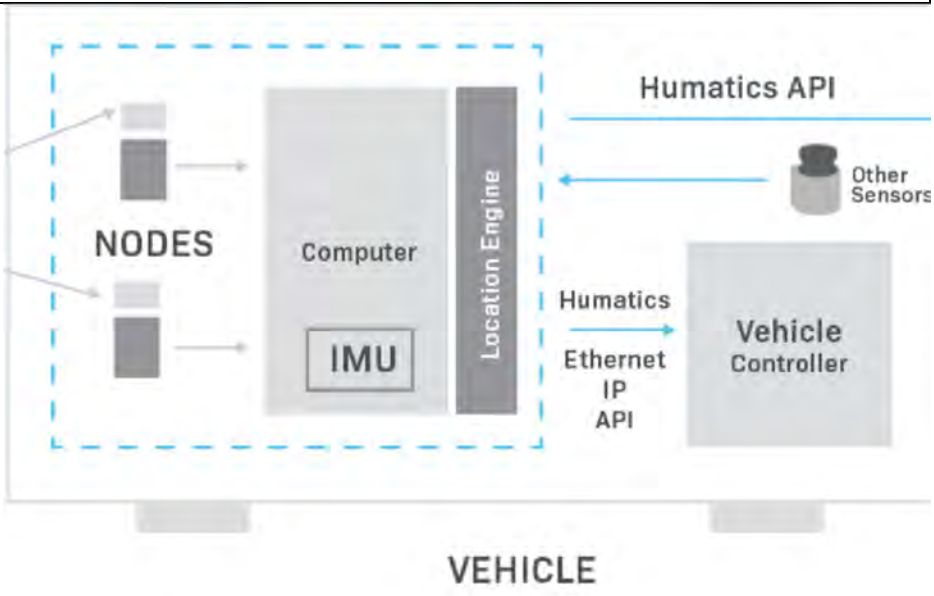
b. a first transponder sensor module operable to send and receive data wirelessly, the first transponder sensor module comprising a first radio communica-tion unit and a first antenna;	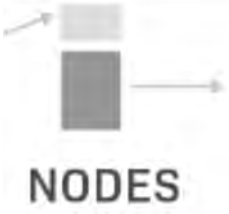

Claims 1-2, 7-10, 12-14, 17, and 19 of the '131 patent	Defendants' System
c. a first control electronics module comprising a first processor in communication with at least the first transponder sensor module; and	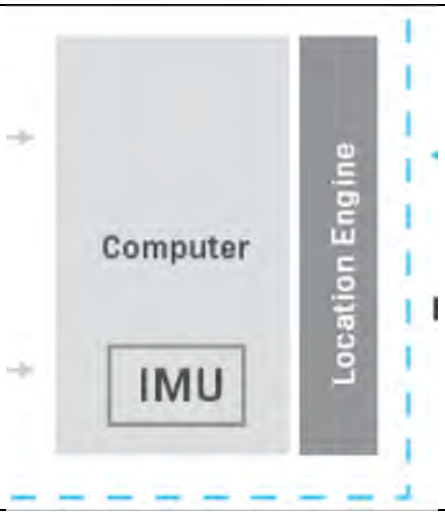
d. a first user interface module including a first user interface, the first user interface operable to provide rail vehicle information to a vehicle operator and to receive input from the vehicle operator;	The Defendants' system includes a vehicle mounted user interface module that provides information to an operator and can also receive control information from the operator. 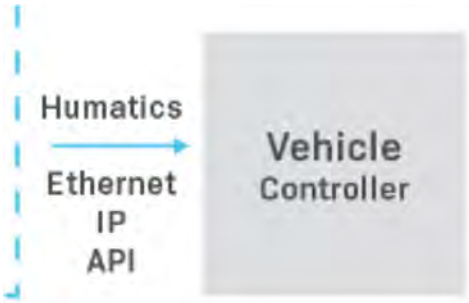 DRIVER ASSISTANCE SYSTEMS Integrate with the onboard Train Control & Management System (TCMS) and Driver Machine Interface (DMI) to provide situational awareness and enable precision stops at platforms. Provide zero-speed signal and train type information to SIL-4 door controllers.
e. a second vehicle mounted module mounted on a	The Defendants' are providing multiple vehicle modules for use on multiple vehicles in the MTA System.

Claims 1-2, 7-10, 12-14, 17, and 19 of the ’131 patent	Defendants’ System
second rail vehicle, the second vehicle mounted module comprising:	
f. a second transponder sensor module operable to send and receive data wirelessly, the second transponder sensor module comprising a second radio communicatio n unit and a second antenna;	
h. a second control electronics module comprising a second processor in communica-tion with at least the second transponder	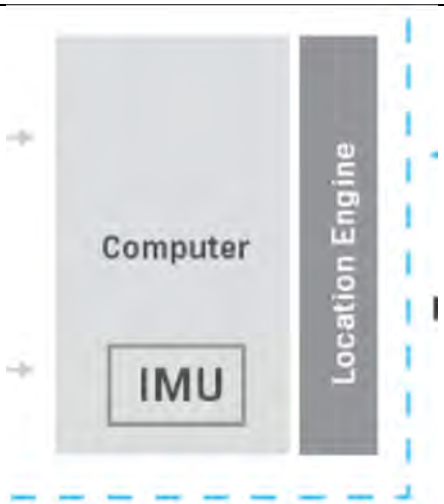

Claims 1-2, 7-10, 12-14, 17, and 19 of the ’131 patent	Defendants’ System
sensor module; and	
g. a second user interface module including a second user interface, the second user interface operable to provide rail vehicle information to the vehicle operator and to receive input from the vehicle operator;	The Defendants’ system includes a vehicle mounted user interface module that provides information to an operator and can also receive control information from the operator. 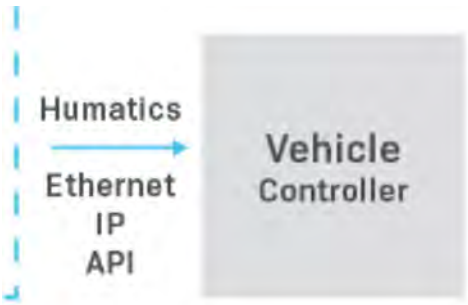 **DRIVER ASSISTANCE SYSTEMS** Integrate with the onboard Train Control & Management System (TCMS) and Driver Machine Interface (DMI) to provide situational awareness and enable precision stops at platforms. Provide zero-speed signal and train type information to SIL-4 door controllers.
h. wherein: the first vehicle mounted module is operable to communicate with the second vehicle mounted module mounted on the second rail vehicle; and	A reasonable opportunity for discovery will show that the accused system was at least offered for sale with this feature, if the feature has not already be enabled. **AUTOMATIC TRAIN OPERATION (ATO)** Train-to-train UWB ranging provides the ultra-precise high-frequency relative positioning information necessary for vehicle platooning. In addition, train-to-train UWB communication enables the synchronization of braking and traction between trainsets.
i. the first vehicle	The UWB radios range using a time of flight technique.

Claims 1-2, 7-10, 12-14, 17, and 19 of the ’131 patent	Defendants’ System
mounted module and the second vehicle mounted module are operable to apply a time of flight technique to determine a separation distance between the first rail vehicle and the second rail vehicle.	
2. The collision avoidance system of claim 1, further comprising: a central tracking unit in communication with the first vehicle mounted module and the second vehicle mounted module, wherein the central tracking unit is operable to track a location of the first vehicle	The Defendants’ system also tracks train location centrally, using an external communications system. 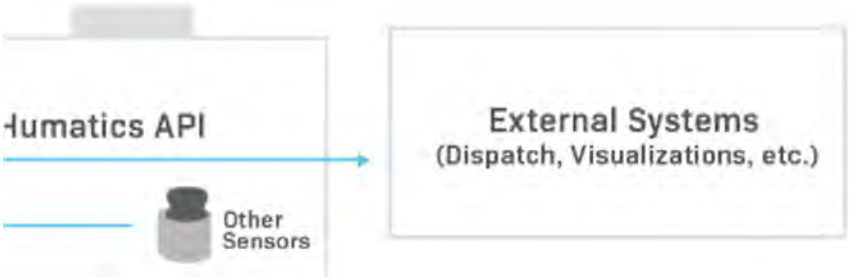

Claims 1-2, 7-10, 12-14, 17, and 19 of the ’131 patent	Defendants’ System
mounted module and a location of the second vehicle mounted module.	
7. The collision avoidance system of claim 1, wherein: the first vehicle mounted module further comprises a first global positioning system unit, the global positioning system unit operable to receive information from one or more satellites to determine an absolute position of the first rail vehicle; and the first global positioning system unit is in communication with the first control electronics module.	The vehicle mounted modules include GNSS/GPS positioning. a constellation of UWB beacons. Given this architecture, UWB ranging is especially well-suited to augment GNSS positioning on sections of track with poor or no signal reception such as urban canyons and tunnels.
8. The collision avoidance system of claim 7, wherein: the first	The Defendants’ location engine combines GPS (“Other Sensors”) and UWB positioning information to generate warning signals.

Claims 1-2, 7-10, 12-14, 17, and 19 of the '131 patent	Defendants' System
vehicle mounted module receives information generated by the first global positioning system unit and the first radio communication unit to determine whether one or more vehicle separation criteria are violated; and the first vehicle mounted module generates a warning signal when one or more vehicle separation criteria are violated.	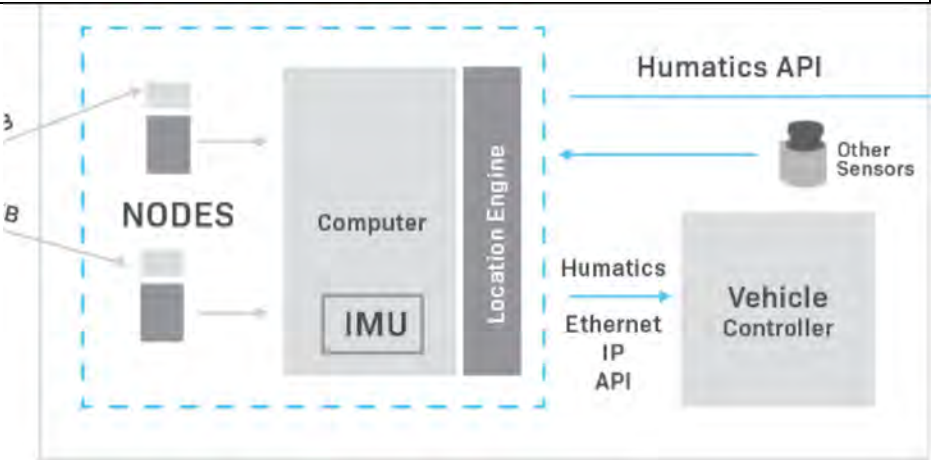
9. The collision avoidance system of claim 1, wherein: the first vehicle mounted module is adapted to execute a progressive warning signal if one or more vehicle separation criteria are violated; and the	A reasonable opportunity for discovery is likely to show that the in cab collision warnings are progressive.

Claims 1-2, 7-10, 12-14, 17, and 19 of the ’131 patent	Defendants’ System
progressive warning signal increases in at least one of signal rate, signal frequency, single prominence, signal volume, or signal severity as the violation of the vehicle separation criteria approaches or extends beyond a vehicle separation threshold.	
10. The collision avoidance system of claim 1, wherein the first vehicle mounted module executes an adaptive threshold feature that modifies one or more vehicle separation thresholds based on a speed of the first rail vehicle and a speed of the second rail vehicle.	A reasonable opportunity for discovery is likely to show that the warning threshold is adapted based on the rate of change of the distance (speed) between the vehicles.
12. The collision avoidance system	The Defendants’ system includes an inertial measurement unit (IMU).

Claims 1-2, 7-10, 12-14, 17, and 19 of the ’131 patent	Defendants’ System
of claim 1, further comprising: a first inertial measurement unit in communication with at least the first control electronics module, the first inertial measurement unit being operable to detect changes in a speed of the first rail vehicle.	
13. The collision avoidance system of claim 12, wherein the first inertial measurement unit comprises at least one of an accelerometer or a gyroscope.	A reasonable opportunity for discovery is likely to show that the IMU includes either an accelerometer, gyroscope, or equivalent motion sensor.
14. The collision avoidance system of claim 1, wherein the first radio communication unit is operable to transmit and receive signals with varying	A reasonable opportunity for discovery is likely to show that the Defendants are implementing the accused system with a Qorvo chip set that includes the ability to vary the center frequency of the UWB signal.

Claims 1-2, 7-10, 12-14, 17, and 19 of the '131 patent	Defendants' System
center frequencies.	
17. A rail vehicle module mountable on a first rail vehicle, the module comprising:	The Defendants' system includes modules mounted on a first rail vehicle.
a. a transponder sensor module comprising:	The Defendants' system includes a transponder sensor module that comprises the following components:
b. a radio communica-tion unit operable to employ time of flight techniques to detect a separation distance between the first rail vehicle and a second vehicle;	The radio communication unit utilizes a time of flight technique for distance measurement that detects a separation distance between the first and second rail vehicles.
c. a first wireless communicatio ns antenna operable to send and receive data representing the separation	The UWB node includes an antenna that sends and receives data used to determine the time of flight.

Claims 1-2, 7-10, 12-14, 17, and 19 of the ’131 patent	Defendants’ System
distance over the air;	
d. a global positioning system unit operable to receive information from one or more satellites to determine an absolute position of the first rail vehicle;	The Defendants’ system includes an “other sensor” that is a GNSS/GPS position input. a constellation of UWB beacons. Given this architecture, UWB ranging is especially well-suited to augment GNSS positioning on sections of track with poor or no signal reception such as urban canyons and tunnels.
e. a control electronics module comprising a processor in communicatio n with the transponder sensor module; and	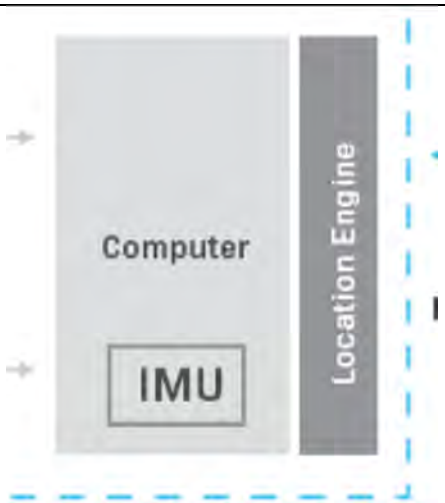
f. a user interface module including a user interface operable to provide rail vehicle information to	The Defendants’ system includes a user interface for communicating with the driver and control the train. DRIVER ASSISTANCE SYSTEMS Integrate with the onboard Train Control & Management System (TCMS) and Driver Machine Interface (DMI) to provide situational awareness and enable precision stops at platforms. Provide zero-speed signal and train type information to SIL-4 door controllers.

Claims 1-2, 7-10, 12-14, 17, and 19 of the '131 patent	Defendants' System
a vehicle operator and to receive input from the vehicle operator,	
g. wherein the rail vehicle module communicates with a second rail vehicle module mountable on the second vehicle to detect a separation distance between the first rail vehicle and the second vehicle.	Defendants' system is at least capable of this limitation, it is an element of the NYCT RFP, and the Defendants' offer it for sale: **AUTOMATIC TRAIN OPERATION (ATO)** Train-to-train UWB ranging provides the ultra-precise high-frequency relative positioning information necessary for vehicle platooning. In addition, train-to-train UWB communication enables the synchronization of braking and traction between trainsets.
19. The rail vehicle module mountable on a first rail vehicle of claim 17, wherein:	
a. the rail vehicle module is operable to utilize information	The Defendants' module determines whether at least one minimum distance criteria has been violated.

Claims 1-2, 7-10, 12-14, 17, and 19 of the '131 patent	Defendants' System
generated by the radio communications unit and the global positioning system unit to determine whether one or more vehicle separation criteria are violated, and	
b. the rail vehicle module is further operable to generate a progressive warning signal if one or more vehicle separation criteria are violated; and	A reasonable opportunity for discovery is likely to show that the module generates a progressive warning.
c. the progressive warning signal increases in at least one of signal rate, signal frequency, signal prominence, signal volume,	A reasonable opportunity for discovery is likely to show that the progressive warning includes at least one of rate, frequency, prominence, volume, or severity as the criteria is approached or exceeded.

Claims 1-2, 7-10, 12-14, 17, and 19 of the '131 patent	Defendants' System
or signal severity as the violation of the vehicle separation criteria approaches or extends beyond a vehicle separation threshold.	

101. Defendants directly infringe the claims by offering and selling their UWB systems and related components to the MTA, and indirectly infringe by aiding and abetting the MTA in the operation of those systems and by aiding and abetting the MTA in the operation of the MTA System.

102. A reasonable opportunity for discovery is likely to show that Defendants are offering their infringing system for sale to other transit agencies and using the Pilot project installations as a reference.

103. Defendants are also contributory infringers, because the components sold by Defendants for installation in the MTA System are customized for the MTA's unique requirements and have no substantial non-infringing use.

104. Metrom is entitled to damages adequate to compensate Metrom for Defendants' infringement, as provided by 35 U.S.C. § 284 and in no event less than a reasonable royalty.

COUNT IV – PATENT INFRINGEMENT, U.S. PATENT NO. 10,737,709, 35 U.S.C. § 281 – ALL DEFENDANTS

105. The allegations in the preceding paragraphs are incorporated herein.

106. This claim is brought under 35 U.S.C. § 281 and the court has original and exclusive jurisdiction under 35 U.S.C. § 1338.

107. Metrom is the owner of duly issued U.S. Patent No. 10,737,709 ("'709 patent") (Exhibit D) titled "Worker Protection System" and has been the owner at all times material to this claim.

108. Piper and Humatics are including, in their offers and solicitations to the MTA and others, with or without Siemens and Thales, worker protection features using UWB technology pioneered by Metrom.

109. Worker protection is of great interest to the MTA, and a reasonable opportunity for discovery is likely to show that the availability or future availability of this feature with no or minimal hardware changes to the Defendants' installed systems is a factor in awarding contracts to the Defendants.

110. Metrom's '709 patent covers worker protection using UWB that defendants have offered to sell, and will sell and operate in a UWB system for the MTA, as shown in the following table, either literally or by equivalence, either alone or as installed in the MTA System:

Claims 1, 3-4, 7, 12-16, 20 of the '709 patent	**Defendants' System**
1. A system for worker protection, the system comprises:	**HI-RAIL VEHICLES AND ROADWAY WORKER PROTECTION** UWB provides the ranging and communication infrastructure for roadway worker protection systems. The positioning precision allows for making the safety-critical distinction between workers and vehicles on and off the tracks.
a. a train-mounted unit for use on a train, wherein the train-mounted unit comprises:	Defendants are offering a train-mounted unit. 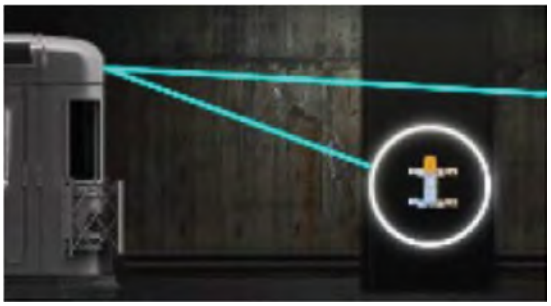 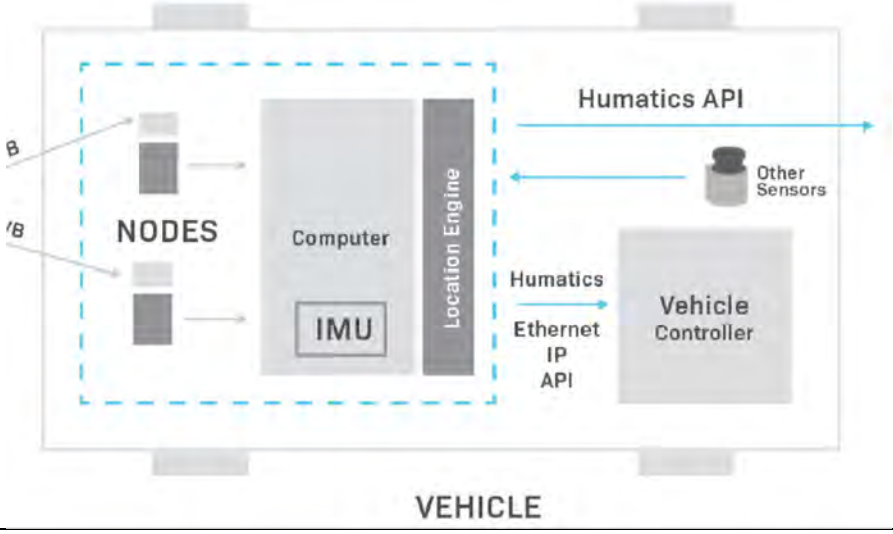

Claims 1, 3-4, 7, 12-16, 20 of the ’709 patent	Defendants’ System
b. a communication component, comprising one or more antennas, configured to transmit and/or receive wireless signals, wherein the signals comprise ultra-wideband (UWB) signals; and	The train mounted unit has UWB “nodes” mounted on the train.
c. one or more circuits configured to process signals and data, and perform one or more applications or functions relating to operations of the train-mounted unit; and	Defendants equipment includes vehicle mounted hardware including a location engine and vehicle controller. 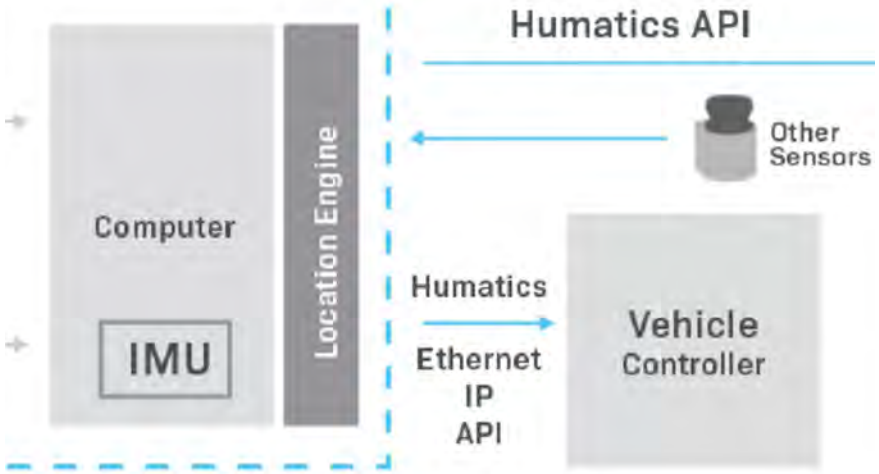
d. wherein the train-mounted unit is	The train mounted unit uses the UWB signals to communicate with UWB beacons on the wayside that are

Claims 1, 3-4, 7, 12-16, 20 of the ’709 patent	Defendants’ System
configured to operate cooperatively with one or more wayside units, configured for placement on or near a track traversed by the train, to provide alerts to one or more workers operating on or near the track, based on communicatio n of the UWB signals with at least one of the one or more wayside units.	associated with workers. The workers are alerted by the wayside units to the presence of an approaching train.
3. The system of claim 1, wherein the train-mounted unit is configured to generate data relating to alerts and/or to other	The Defendants’ system generates alerts based on the location of reported worker-related beacons relative to the position of the train.

Claims 1, 3-4, 7, 12-16, 20 of the ’709 patent	Defendants’ System
devices or objects in a path of the train, based on the communication of the UWB signals with at least one of the one or more wayside units.	
4. The system of claim 1, wherein the train-mounted unit is configured to generate feedback information for outputting to an operator of the train, based on the communication of the UWB signals with at least one of the one or more wayside units.	The Defendants’ system generates alerts for the train operator based on the location of reported worker-related beacons relative to the position of the train.
7. The system of claim 1, wherein the train-mounted unit comprises one or more input/output (I/O) components, for receiving input from an operator of the train and/or for providing	The Defendants’ system includes a user interface for the train operator. **DRIVER ASSISTANCE SYSTEMS** Integrate with the onboard Train Control & Management System (TCMS) and Driver Machine Interface (DMI) to provide situational awareness and enable precision stops at platforms. Provide zero-speed signal and train type information to SIL-4 door controllers.

Claims 1, 3-4, 7, 12-16, 20 of the ’709 patent	Defendants’ System
output to the operator of the train.	
12. A system for worker protection, the system comprises:	**HI-RAIL VEHICLES AND ROADWAY WORKER PROTECTION** UWB provides the ranging and communication infrastructure for roadway worker protection systems. The positioning precision allows for making the safety-critical distinction between workers and vehicles on and off the tracks.
a. one or more wayside units configured for placement on or near a track; wherein each wayside unit comprises:	
b. a communication component, comprising one or more antennas, configured to transmit and/or receive wireless signals,	Each wayside beacon has a UWB radio with an antenna.

Claims 1, 3-4, 7, 12-16, 20 of the ’709 patent	Defendants’ System
wherein the signals comprise ultra-wideband (UWB) signals; and	
c. one or more circuits configured to process signals and data, and perform one or more applications or functions relating to operations of the wayside detection unit; and	The wayside radios are controlled by a processor that controls operation of the radio.
d. wherein the one or more wayside units are configured to operate cooperatively with any train-mounted unit deployed on a train traversing the track, to provide alerts to one or more workers operating on	

Claims 1, 3-4, 7, 12-16, 20 of the ’709 patent	Defendants’ System
or near the track, based on communicatio n of the UWB signals between at least one of the one or more wayside units and the train-mounted unit.	
13. The system of claim 12, wherein each wayside unit comprises a power supply for powering components of the wayside unit.	Each wayside unit has a power source.
14. The system of claim 12, wherein each wayside unit comprises a housing for enclosing components of the wayside unit.	The wayside units have a housing, whether mounted on a worker or near the worksite:

Claims 1, 3-4, 7, 12-16, 20 of the ’709 patent	Defendants’ System
15. The system of claim 12, wherein each wayside unit comprises a support structure for holding and supporting the wayside unit when placed on or near the track.	The wayside units have a support structure.
16. The system of claim 12, wherein at least one wayside unit is configured to broadcast alert related signals, relating to the train when approaching the wayside unit.	A reasonable opportunity for discovery is likely to show that at least some of the wayside units in Defendants’ system broadcasts an alert when a train is approaching the unit.

Claims 1, 3-4, 7, 12-16, 20 of the ’709 patent	Defendants’ System
	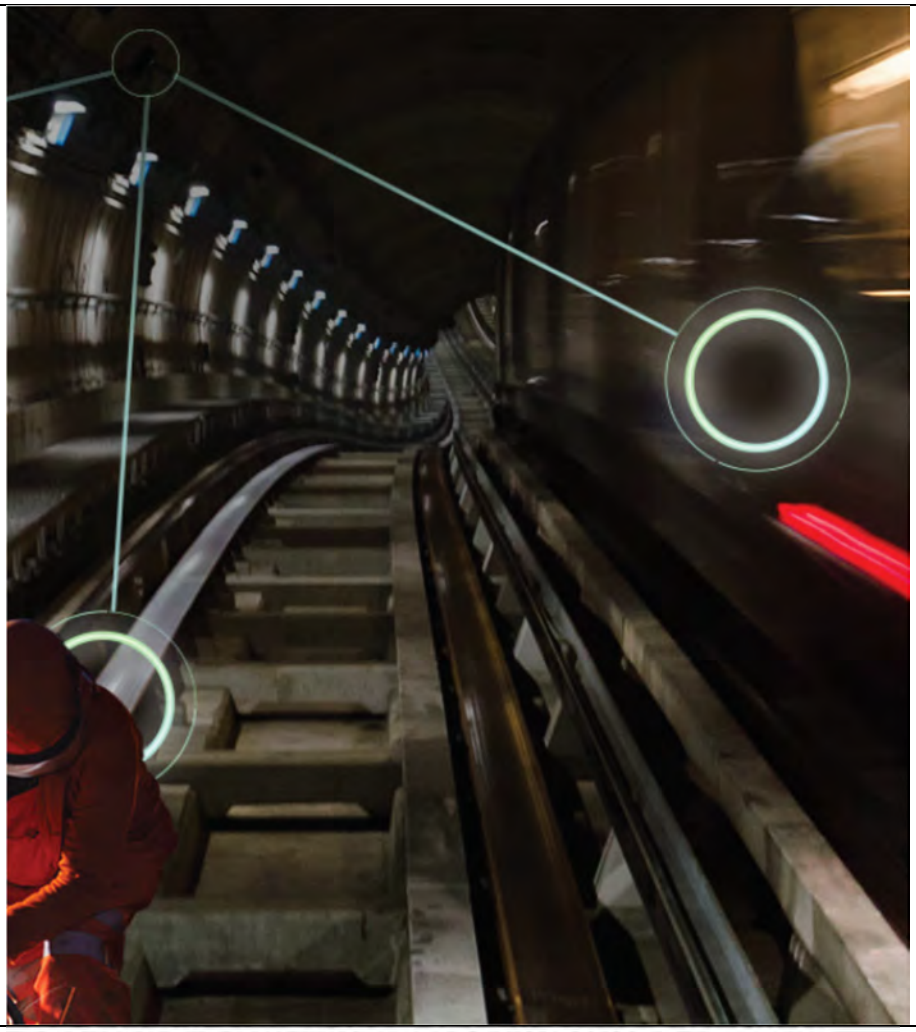
20. A system for protecting workers near railroad tracks, comprising:	**HI-RAIL VEHICLES AND ROADWAY WORKER PROTECTION** UWB provides the ranging and communication infrastructure for roadway worker protection systems. The positioning precision allows for making the safety-critical distinction between workers and vehicles on and off the tracks.
a. one or more UWB radios at pre-determined locations along the railroad tracks;	Radios are mounted at multiple locations along the tracks.

Claims 1, 3-4, 7, 12-16, 20 of the ’709 patent	Defendants’ System
b. one or more worker UWB radios associated with one or more workers on or near the railroad tracks;	
c. a vehicle UWB radio associated with a vehicle on the railroad track;	The Defendants’ system includes UWB radios in the trains:

Claims 1, 3-4, 7, 12-16, 20 of the ’709 patent	Defendants’ System
	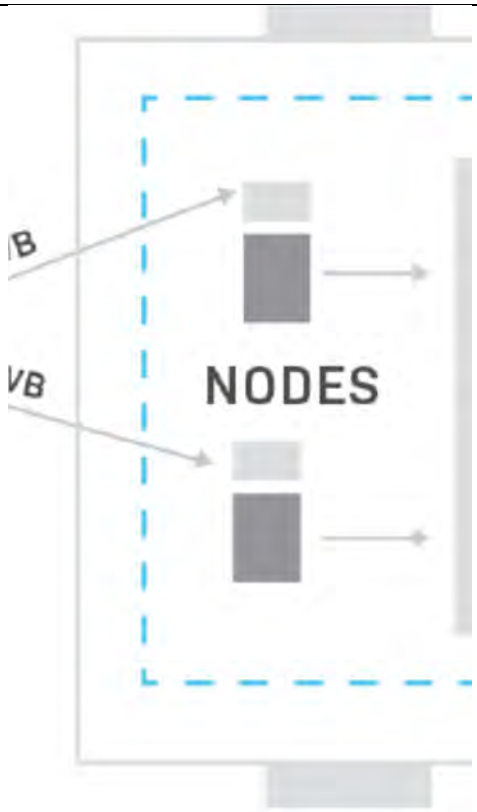
d. wherein: the vehicle UWB radio is in communication with a processor, wherein:	The vehicle radio is in communication with a processor. 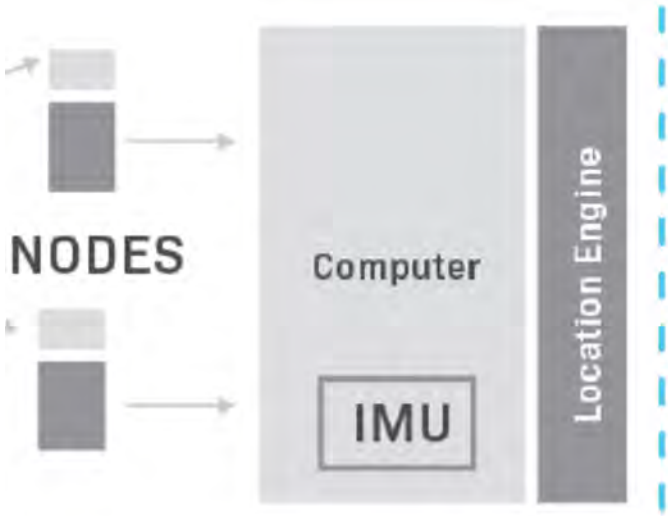

Claims 1, 3-4, 7, 12-16, 20 of the ’709 patent	Defendants’ System
e. the processor determines a position of the vehicle based on time of flight measurements obtained based on communication between the vehicle UWB radio and at least one of the one or more UWB radios that are located at pre-determined locations;	The processor includes a location engine for determining position, based at least in part on the time of flight ranging to wayside UWB beacons. 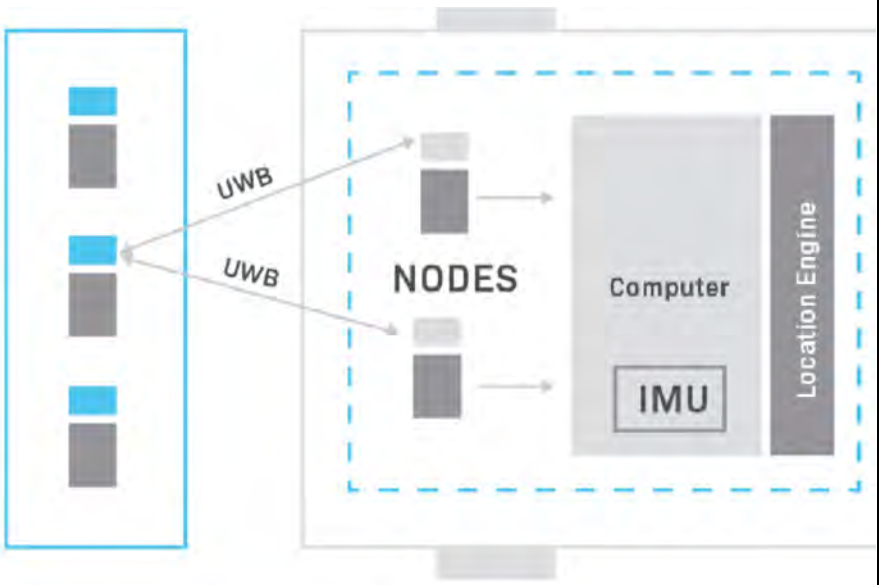
f. the processor determines a location in which the one or more workers are working based on time of flight information obtained based on communication with at least one of the one or more	A reasonable opportunity for discovery is likely to show that the processor determines worker location based on information received from the wayside beacon that includes UWB ranging information from one or more worker UWB radios.

Claims 1, 3-4, 7, 12-16, 20 of the ’709 patent	Defendants’ System
worker UWB radios; and	
g. the processor generates an alert to an operator of the vehicle based on the determined location of the one or more workers; and	A reasonable opportunity for discovery is likely to show that the user interface will generate alerts to the operator based on the determined location of workers.
h. at least one worker UWB radio communicates time of flight information between the at least one worker UWB radio and the vehicle UWB radio to a processor in communication with the at least one worker UWB radio, wherein the processor generates alerts to a worker associated with the at	A reasonable opportunity for discovery is likely to show that the alert generated by the worker UWB radio includes an alert based on one of the listed criteria.

Claims 1, 3-4, 7, 12-16, 20 of the ’709 patent	Defendants’ System
least one worker UWB radio based on one or more of: a determined distance to the vehicle UWB radio, an estimated time of closest approach of the vehicle UWB radio to a location of the at least one worker UWB radio, and an approach speed of the vehicle UWB radio.	

111. Defendants directly infringe the claims by offering and selling their UWB systems and related components to the MTA, and indirectly infringe by aiding and abetting the MTA in the operation of those systems and by aiding and abetting the MTA in the operation of the MTA System.

112. A reasonable opportunity for discovery is likely to show that Defendants are offering their infringing system for sale to other transit agencies and using the Pilot project installations as a reference.

113. Defendants are also contributory infringers, because the components sold by Defendants for installation in the MTA System are customized for the MTA's unique requirements and have no substantial non-infringing use.

114. Metrom is entitled to damages adequate to compensate Metrom for Defendants' infringement, as provided by 35 U.S.C. § 284 and in no event less than a reasonable royalty.

COUNT V – PATENT INFRINGEMENT, U.S. PATENT NO. 10,179,595, 35 U.S.C. § 281 – ALL DEFENDANTS

115. The allegations in the preceding paragraphs are incorporated herein.

116. This claim is brought under 35 U.S.C. § 281 and the court has original and exclusive jurisdiction under 35 U.S.C. § 1338.

117. Metrom is the owner of duly issued U.S. Patent No. 10,179,595 ("'595 patent") (Exhibit E) titled "Worker Protection System" and has been the owner at all times material to this claim.

118. Piper and Humatics are including, in their offers and solicitations to the MTA and others, with or without Siemens and Thales, worker protection features using UWB technology pioneered by Metrom.

119. Worker protection is of great interest to the MTA, and a reasonable opportunity for discovery is likely to show that the availability or future availability of this feature with no or minimal hardware changes to the Defendants' installed systems is a factor in awarding contracts to the Defendants.

120. Metrom's '595 patent covers worker protection using UWB that Defendants have offered to sell, and will sell and operate in a UWB system for the MTA, as shown in the following table, either literally or by equivalence, either alone or as installed in the MTA System:

Claims 21, 23 of the '595 patent	**Defendants' System**
21. A system for worker protection, the system comprises:	HI-RAIL VEHICLES AND ROADWAY WORKER PROTECTION UWB provides the ranging and communication infrastructure for roadway worker protection systems. The positioning precision allows for making the safety-critical distinction between workers and vehicles on and off the tracks.
a. a vehicle-mounted alert device, configured for use on a vehicle, the vehicle-mounted alert	The Defendants' system has a vehicle mounted alert device that generates alerts within the vehicle for use by the operator of the vehicle.

Claims 21, 23 of the ’595 patent	Defendants’ System
device comprising:	
b. a housing for enclosing components of the vehicle-mounted alert device;	The vehicle mounted device includes at least one housing.
c. a communication component, comprising one or more antennas, configured for transmitting and/or receiving wireless signals;	The vehicle mounted device includes at least one communication component, that a reasonable opportunity for discovery is likely to show is a Qorvo UWB transceiver that includes an antenna for receiving and transmitting UWB signals.
d. one or more circuits operable to process signals and data, and to perform one or more applications or functions relating to operations of the vehicle-mounted alert device; and	The vehicle mounted device includes a computer that processes the data and signals received, to perform the safety function of a worker alert warning.
e. one or more input/output (I/O)	The vehicle mounted device includes in interface for the operator to provide alerts and receive input.

Claims 21, 23 of the ’595 patent	Defendants’ System
components, for receiving input from an operator of the vehicle and/or for providing output to the operator of the vehicle; wherein the vehicle-mounted alert device is operable to:	DRIVER ASSISTANCE SYSTEMS Integrate with the onboard Train Control & Management System (TCMS) and Driver Machine Interface (DMI) to provide situational awareness and enable precision stops at platforms. Provide zero-speed signal and train type information to SIL-4 door controllers.
g. broadcast alert triggering signals; and	A reasonable opportunity for discovery is likely to show that the Defendants’ system will broadcast an alert related to the presence of a worker in the path of the vehicle
h. generate, in response to triggering of alerts, data relating to alerts and/or to other devices or objects in path of the vehicle; and	A reasonable opportunity for discovery is likely to show that Defendants’ system generates data relating to the alerts
i. output based on the data, via the one or more I/O components, feedback information to the operator.	A reasonable opportunity for discovery is likely to show that the vehicle mounted device outputs feedback to the operator regarding the alerts.
23. The system of claim 21, wherein the vehicle-	A reasonable opportunity for discovery is likely to show that the vehicle mounted device logs alert data.

Claims 21, 23 of the ’595 patent	Defendants’ System
mounted alert device is operable to log data relating to alerts triggered in response to movement of the vehicle.	

121. Defendants directly infringe the claims by offering and selling their UWB systems and related components to the MTA, and indirectly infringe by aiding and abetting the MTA in the operation of those systems and by aiding and abetting the MTA in the operation of the MTA System.

122. A reasonable opportunity for discovery is likely to show that Defendants are offering their infringing system for sale to other transit agencies and using the Pilot project installations as a reference.

123. Defendants are also contributory infringers, because the components sold by Defendants for installation in the MTA System are customized for the MTA’s unique requirements and have no substantial non-infringing use.

124. Metrom is entitled to damages adequate to compensate Metrom for Defendants’ infringement, as provided by 35 U.S.C. § 284 and in no event less than a reasonable royalty.

COUNT VI – TORTIOUS INTERFERENCE WITH PROSPECTIVE ECONOMIC ADVANTAGE

125. The allegations in the preceding paragraphs are incorporated herein.

126. This claim is a common law claim for tortious interference with prospective economic advantage and the court has jurisdiction under 35 U.S.C. § 1367.

127. The Pilot RFP was based on Metrom's prior demonstrations. Metrom had a proven record of success in meeting the requirements set out in the Pilot RFP, which included having been awarded four U.S. patents directed to its innovative technology. Metrom was therefore reasonably certain to win the Pilot Demonstration Project, and with that project in hand, was reasonably certain to be a supplier to the MTA for the complete UWB signaling project for the NYCT system.

128. Defendants interfered with Metrom's reasonable expectations of success by deliberately infringing Metrom's patents, or submitting proposals to the MTA knowing that they would inevitably infringe Metrom's patent rights in the future.

129. But for submitting proposals that infringed Metrom's intellectual property rights, Defendants would not have won the Pilot Demonstration RFP and

would not have been selected as the dual source providers for the MTA UWB system installation.

130. A reasonable opportunity for discovery is also likely to show that Siemens improperly influenced the MTA to reject Metrom's bid, by obtaining Metrom's bid amount and by compensating consultants who lobbied the MTA for Siemens without disclosing their affiliation with Siemens.

131. Metrom was damaged by Defendants' conduct, in the loss of profits from the Pilot Demonstration project, the loss of future profits from the UWB system installation, and the loss of a reference design.

COUNT VII CIVIL CONSPIRACY– ALL DEFENDANTS

132. The allegations in the preceding paragraphs are incorporated herein.

133. This is a common law claim and the court has jurisdiction under 35 U.S.C. § 1367.

134. The co-conspirators are Siemens, Humatics, Thales, and Piper.

135. The co-conspirators have embarked on a common course of action to infringe Metrom's patents and tortiously interfere with Metrom's ability to compete for MTA business. Direct evidence of a common scheme or plan includes:

a. In the bidding for the Pilot RFP, the MTA issued a secret "addendum" favorable to Thales and Siemens that was concealed from Metrom, and Siemens engaged in additional improper activity as alleged in Count VI.

b. When Metrom notified Siemens, Thales, and Piper of Metrom's patent rights in the summer of 2019, a single anonymous entity responded by filing a prior art submission with the patent office.

c. Recently, the MTA has awarded Siemens/Humatics and Thales/Piper a joint contract to develop a common UWB radio protocol and specification that will be used to infringe Metrom's patents, but that will not be available to Metrom. All four co-conspirators will cooperate to develop the radio specification and communication rules that will be used to infringe Metrom's patent rights, while excluding Metrom as a supplier.

d. A reasonable opportunity for discovery is likely to show that Siemens and Thales have maintained a duopoly for signals equipment with the MTA, with Siemens maintaining a consistent 60-70% of the MTA signaling equipment business.

e. A reasonable opportunity for discovery is likely to show that Siemens/Humatics and Thales/Piper have entered into explicit

indemnification agreements allocating the risk that Metrom would assert its patents against one or more of them.

f. A reasonable opportunity for discovery is likely to show that Defendants are all planning to submit bids to the MTA for complete signal replacement on NYCT subway lines jointly which will infringe Metrom's patents.

136. Metrom has been damaged by the conspiracy, including to at least the extent of its lost profits in that Metrom has not only been forced to compete with its own technology, it has been locked out of future business with the MTA based on its own technology and by being deprived of any ability to join the Defendants in writing the standards for future interoperability of UWB signal technology applicable to the MTA, deprived of a reference design, and effectively denied the ability to compete for any other commuter rail signal projects.

JURY DEMANDED UNDER FED. R. CIV. P. 38

Metrom demands a jury on all issues so triable.

PRAYER FOR RELIEF

Wherefore, Metrom requests the following relief:

1. A judgment that Defendants have infringed one or more claims of the asserted patents;

2. An accounting for Defendants' profits;

3. All compensatory and punitive damages as may be allowed by statute or law;

4. A decree preliminarily and permanently enjoining Defendants, their principals, officers, directors, employees, agents, successors, assigns, and any persons in active concert with them from infringing, directly or indirectly, the asserted patents, including immediately ceasing all marketing, offers for sale, sales, and support of systems covered by the patents, under 35 U.S.C. § 283;

5. A judgment and order requiring Defendants to pay Plaintiff its damages, costs, expenses, and prejudgment and post-judgment interest for Defendants' infringement of the asserted patents;

6. A judgment and order requiring Defendants to pay Plaintiff its damages, costs, expenses, and prejudgment and post-judgment interest for Defendants' tortious acts;

7. An award to Plaintiff for enhanced damages resulting from Defendants' deliberate, willful, and bad faith conduct, as provided under 35 U.S.C. § 284;

8. An award to Plaintiff of its reasonable attorney fees, as provided under 35 U.S.C. § 285;

9. An order requiring Defendants to disgorge any profits or unjust enrichment derived from Defendants' tortious conduct to Plaintiff;

10. An order requiring Defendants to notify any United States transit agency to which Defendants submit a bid that includes UWB train control equipment of this Court's order and injunctions, and to file a quarterly report with the Court certifying compliance with the Court's injunction.

Dated: April 26, 2022

Respectfully submitted,

FARNAN LLP

/s/ *Michael J. Farnan*
Brian E. Farnan (Bar No. 4089)
Michael J. Farnan (Bar No. 5165)
919 North Market Street, 12th Floor
Wilmington, DE 19801
Telephone: (302) 777-0300
bfarnan@farnanlaw.com
mfarnan@farnanlaw.com

McANDREWS, HELD & MALLOY, LTD.

Gregory C. Schodde (*pro hac vice*)
Ronald H. Spuhler (*pro hac vice*)
Philipp Ruben (*pro hac vice*)
500 West Madison Street, Suite 3400
Chicago, IL 60661
Telephone: (312) 775-8000
gschodde@mcandrews-ip.com
rspuhler@mcandrews-ip.com
pruben@mcandrews-ip.com

Attorneys for Plaintiff

EXHIBIT A

US010778363B2

(12) **United States Patent**
Carlson et al.

(10) **Patent No.: US 10,778,363 B2**
(45) **Date of Patent: *Sep. 15, 2020**

(54) **METHODS AND SYSTEMS FOR DECENTRALIZED RAIL SIGNALING AND POSITIVE TRAIN CONTROL**

(71) Applicant: **Metrom Rail, LLC**, Crystal Lake, IL (US)

(72) Inventors: **Richard C. Carlson**, Palatine, IL (US); **Kurt Alan Gunther**, Woodstock, IL (US); **Sara Jo Woitel**, Lake Zurich, IL (US); **Marc Wayne Cygnus**, Mundelein, IL (US)

(73) Assignee: **METROM RAIL, LLC**, Crystal Lake, IL (US)

(*) Notice: Subject to any disclaimer, the term of this patent is extended or adjusted under 35 U.S.C. 154(b) by 0 days.

This patent is subject to a terminal disclaimer.

(21) Appl. No.: **16/515,903**

(22) Filed: **Jul. 18, 2019**

(65) **Prior Publication Data**

US 2019/0337545 A1 Nov. 7, 2019

Related U.S. Application Data

(63) Continuation of application No. 16/290,576, filed on Mar. 1, 2019, which is a continuation-in-part of application No. 16/055,905, filed on Aug. 6, 2018.

(Continued)

(51) **Int. Cl.**

B61L 27/04 (2006.01)
B61L 23/06 (2006.01)

(Continued)

(52) **U.S. Cl.**

CPC ***H04J 11/0079*** (2013.01); ***B61L 3/006*** (2013.01); ***B61L 3/125*** (2013.01); ***B61L 15/0027*** (2013.01);

(Continued)

(58) **Field of Classification Search**

CPC B61L 15/0027; B61L 2027/005; B61L 2201/00; B61L 2205/00; B61L 23/20;

(Continued)

(56) **References Cited**

U.S. PATENT DOCUMENTS

2,475,578 A 7/1949 Halstead
2,762,913 A 9/1956 Jepson

(Continued)

FOREIGN PATENT DOCUMENTS

AU 2012227260 4/2014
AU 2015201462 10/2015

(Continued)

OTHER PUBLICATIONS

PCT, Notification of Transmittal of the International Search Report and the Written Opinion of the International Searching Authority, or the Declaration, in International application No. PCT/US2014/053900, dated Feb. 18, 2015 (21 pages).

(Continued)

Primary Examiner — Mark T Le

(74) *Attorney, Agent, or Firm* — McAndrews, Held & Malloy, Ltd.

(57) **ABSTRACT**

Systems and methods are provided for decentralized rail signaling and positive train control. A decentralized train control system may include a plurality of wayside units, configured for placement on or near tracks in a railway network, and one or more train-mounted units, each configured for use in a train operating in a railway network that support use of the decentralized train control system. Each train-mounted unit may configured to receive communicate with any wayside unit and/or train-mounted unit that comes within range, with the communicating including use of ultra-wideband (UWB) signals, and for generating control information based on the UWB signals, for use in controlling one or more functions associated with operation of the train.

16 Claims, 17 Drawing Sheets

PTCS Redundant Sensing Technologies

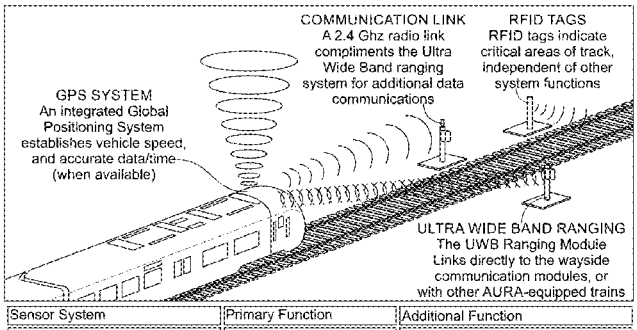

Sensor System	Primary Function	Additional Function
Ultra Wide-Band Transponder (UWB)	Distance Measurements	Data Con / Speed Determination
	Data Communication	GPS-based Distance Measurement
2.4 Ghz Spread Spectrum Radio	Track Location / Track info	Wheel Sensor Cal / Train Position / Range Verification
RFID	Train Position in Surface	
WAAS GPS	Track	RTC Clock Cal / Diagnostics
Train Speed	Speed Measurements	Position Dead-reckoning

Related U.S. Application Data

(60) Provisional application No. 62/637,774, filed on Mar. 2, 2018, provisional application No. 62/541,454, filed on Aug. 4, 2017.

(51) **Int. Cl.**

B61L 23/34	(2006.01)
H04J 11/00	(2006.01)
B61L 27/00	(2006.01)
B61L 3/00	(2006.01)
H04W 4/40	(2018.01)
B61L 3/12	(2006.01)
B61L 15/00	(2006.01)
B61L 25/02	(2006.01)

(52) **U.S. Cl.**

CPC ***B61L 27/0005*** (2013.01); ***B61L 27/04*** (2013.01); ***H04W 4/40*** (2018.02); *B61L 23/06* (2013.01); *B61L 23/34* (2013.01); *B61L 25/021* (2013.01); *B61L 25/025* (2013.01); *B61L 27/0038* (2013.01); *B61L 2201/00* (2013.01); *B61L 2205/00* (2013.01)

(58) **Field of Classification Search**

CPC .. B61L 25/021; B61L 25/025; B61L 27/0005; B61L 27/0038; B61L 27/04; B61L 23/06; B61L 23/044; B61L 27/0088; B61L 25/02; B61L 27/0094; B61L 29/24; B61L 29/32; H02S 99/00; H04W 4/42; H04W 4/44

USPC 246/220

See application file for complete search history.

(56) **References Cited**

U.S. PATENT DOCUMENTS

4,302,811	A	11/1981	McElhenny
4,327,415	A	4/1982	Rush et al.
4,459,668	A	7/1984	Inoue et al.
4,495,578	A	1/1985	Sibley et al.
4,538,228	A	8/1985	Brearey et al.
4,869,557	A	9/1989	Gerum et al.
5,198,800	A	3/1993	Tozawa et al.
5,420,883	A	5/1995	Swensen et al.
5,554,982	A	9/1996	Shirkey et al.
5,620,155	A	4/1997	Michalek
5,652,570	A	7/1997	Lepkofker
5,675,190	A	10/1997	Morita
5,727,758	A	3/1998	Penza et al.
5,924,651	A	7/1999	Penza et al.
5,939,986	A	8/1999	Schiffbauer et al.
5,995,881	A	11/1999	Kull
6,113,037	A	9/2000	Pace
6,135,396	A	10/2000	Whitfield et al.
6,145,792	A	11/2000	Penza et al.
6,208,260	B1	3/2001	West et al.
6,232,887	B1	5/2001	Carson
6,435,459	B1	8/2002	Sanderson et al.
8,650,242	B2	11/2003	Clerk et al.
6,666,411	B1	12/2003	Hart et al.
6,732,023	B2	5/2004	Sugita et al.
7,167,082	B2	1/2007	Stigall
7,624,952	B1	12/2009	Bartek
7,725,252	B2	5/2010	Heddebaut et al.
8,109,474	B2	2/2012	Bartek
8,126,035	B2	2/2012	Hashimoto et al.
8,200,380	B2	6/2012	Ghaly
8,245,983	B2	8/2012	Gilbertson
8,248,263	B2	8/2012	Shervey et al.
8,344,877	B2	1/2013	Sheardown et al.
8,423,240	B2	4/2013	Mian
8,478,463	B2	7/2013	Knott et al.
8,651,433	B2	2/2014	Ghaly
8,786,428	B2	7/2014	Sheardown et al.
8,952,805	B2	2/2015	Baines et al.
8,998,149	B2	4/2015	Takahashi et al.
9,002,546	B2	4/2015	Whitwam et al.
9,008,854	B2	4/2015	Breed
9,022,325	B2	5/2015	Tsukamoto
9,128,815	B2	9/2015	Kanner et al.
9,134,411	B2	9/2015	Soderi et al.
9,434,397	B2 *	9/2016	Chung B61L 25/025
2003/0028323	A1	2/2003	Zeitler et al.
2003/0214417	A1	11/2003	Peltz et al.
2004/0155760	A1	8/2004	Grisham
2005/0010338	A1	1/2005	Kraeling et al.
2005/0110628	A1	5/2005	Kernwein et al.
2006/0015224	A1	1/2006	Hilleary
2006/0151672	A1	7/2006	Heddebaut
2008/0040023	A1	2/2008	Breed et al.
2008/0114519	A1	5/2008	Defaux
2009/0212168	A1	8/2009	Kumar
2009/0326746	A1	12/2009	Mian
2010/0063656	A1	3/2010	Knott et al.
2010/0102954	A1	4/2010	Radivojevic et al.
2010/0225527	A1	9/2010	Talty
2010/0268466	A1	10/2010	Amutham
2010/0327125	A1	12/2010	Braband et al.
2011/0006912	A1	1/2011	Sheardown et al.
2011/0046845	A1	2/2011	Kozlay
2011/0075641	A1	3/2011	Siriwongpairat et al.
2011/0152971	A1	6/2011	Nghiem et al.
2011/0172856	A1	7/2011	Kull
2011/0184621	A1	7/2011	Bock et al.
2011/0234451	A1	9/2011	Bock et al.
2012/0029740	A1	2/2012	Bock et al.
2012/0123617	A1	5/2012	Noffsinger et al.
2012/0126065	A1	5/2012	Smith et al.
2012/0286563	A1	11/2012	Lichterfeld et al.
2012/0296562	A1	11/2012	Carlson
2012/0296567	A1	11/2012	Breed
2013/0024054	A1	1/2013	Katsuta et al.
2013/0046420	A1	2/2013	Gottifredi et al.
2013/0138276	A1 *	5/2013	Soderi B61L 3/008 701/19
2013/0166114	A1	6/2013	Baines et al.
2014/0045547	A1	2/2014	Singamsetty et al.
2014/0046514	A1	2/2014	Jennek et al.
2014/0191089	A1	7/2014	Reichlin et al.
2014/0214247	A1	7/2014	Myokei
2014/0214248	A1	7/2014	Yamada
2014/0229096	A1	8/2014	Carlson
2014/0263856	A1	9/2014	Hann
2015/0032302	A1	1/2015	Foerster et al.
2015/0060608	A1	3/2015	Carlson et al.
2015/0329130	A1	11/2015	Carlson et al.
2015/0344048	A1	12/2015	Kemwein
2015/0367822	A1	12/2015	Jennek et al.
2016/0046308	A1 *	2/2016	Chung B61L 23/041 701/20
2016/0200327	A1	7/2016	Liu
2016/0221592	A1	8/2016	Puttagunta et al.
2016/0280240	A1	9/2016	Carlson et al.
2016/0339934	A1	11/2016	Chung et al.
2017/0101116	A1	4/2017	Shubs, Jr. et al.
2017/0113707	A1	4/2017	Ghaly
2017/0245192	A1	8/2017	Sadri et al.
2017/0282944	A1	10/2017	Carlson et al.
2019/0054942	A1	2/2019	Carlson

FOREIGN PATENT DOCUMENTS

CA	22220819	1/2000
CN	1417071	5/2003
CN	1676375	10/2005
CN	201323574	10/2009
CN	102923158	2/2013
JP	2001106074	4/2001
JP	4755521	8/2011
JP	4917313	4/2012
KR	20050097843	10/2005
KR	100733599	7/2007

(56) **References Cited**

FOREIGN PATENT DOCUMENTS

KR	100975289	8/2010
KR	20140017157	2/2014
WO	03012470	2/2003

OTHER PUBLICATIONS

Chinese Office Action for Application No. 201710074449.6, dated Jan. 17, 2019 (22 pages).
International Search Report and Written Opinion for PCT/US2018/045388, dated Oct. 18, 2018. (16 pages).
International Search Report and Written Opinion for PCT/US2016/023754, dated Aug. 8, 2016. (10 pages).
International Search Report and Written Opinion for PCT/US2018/049062, dated Nov. 9, 2018. (13 pages).
Internatinoal Search Report and Written Opinion for PCT/US19/20385, dated Jun. 28, 2019. (15 pages).
International Preliminary Report on Patentability for PCT/US2018/049062, date of completion—Oct. 26, 2018, 8 pages.

* cited by examiner

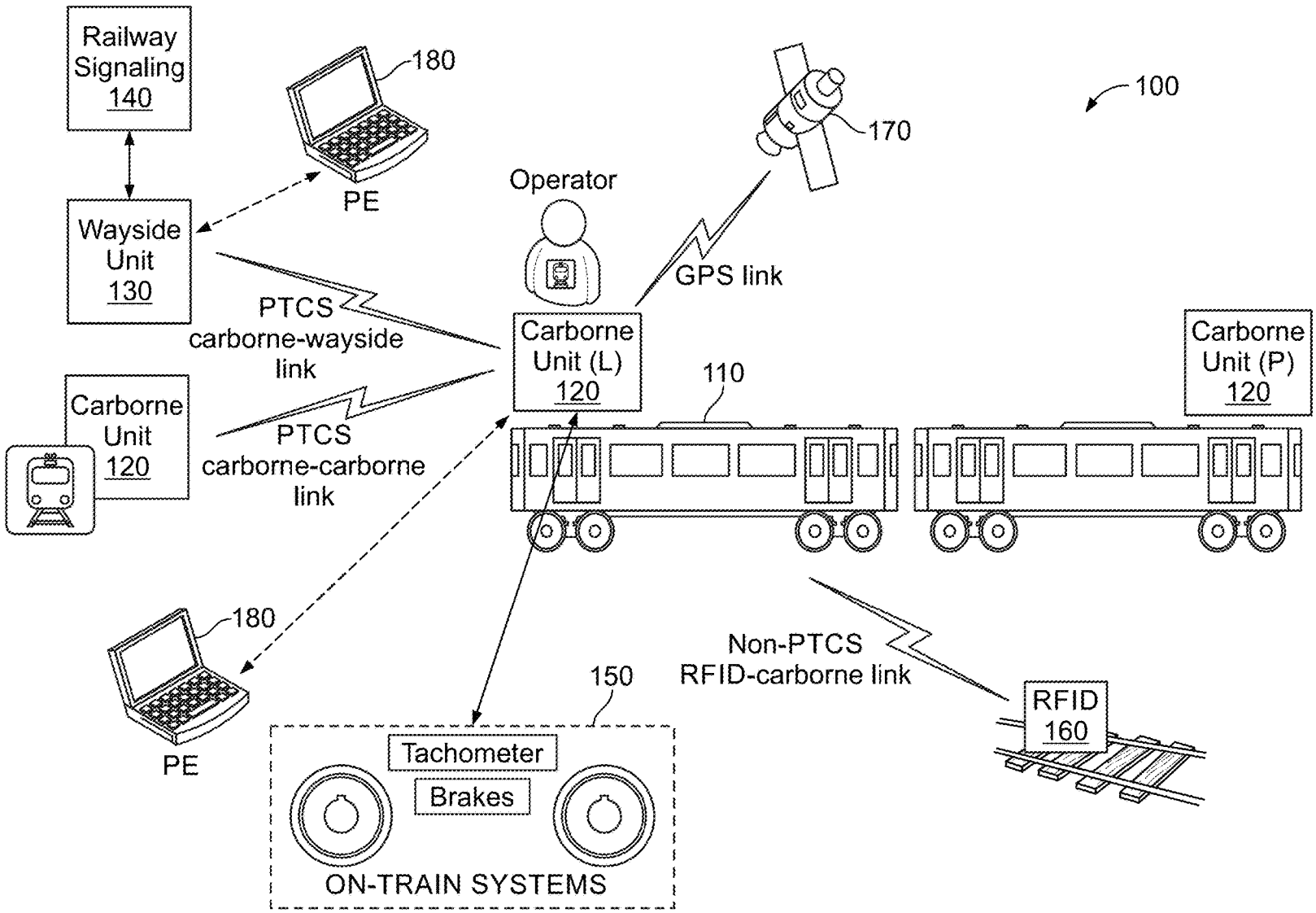
Railway Signaling 140
Wayside Unit 130
180
PE
PTCS carborne-wayside link
Carborne Unit 120
PTCS carborne-carborne link
Operator
Carborne Unit (L) 120
110
170
GPS link
100
Carborne Unit (P) 120
180
PE
150
Tachometer
Brakes
ON-TRAIN SYSTEMS
Non-PTCS RFID-carborne link
RFID 160

FIG. 1

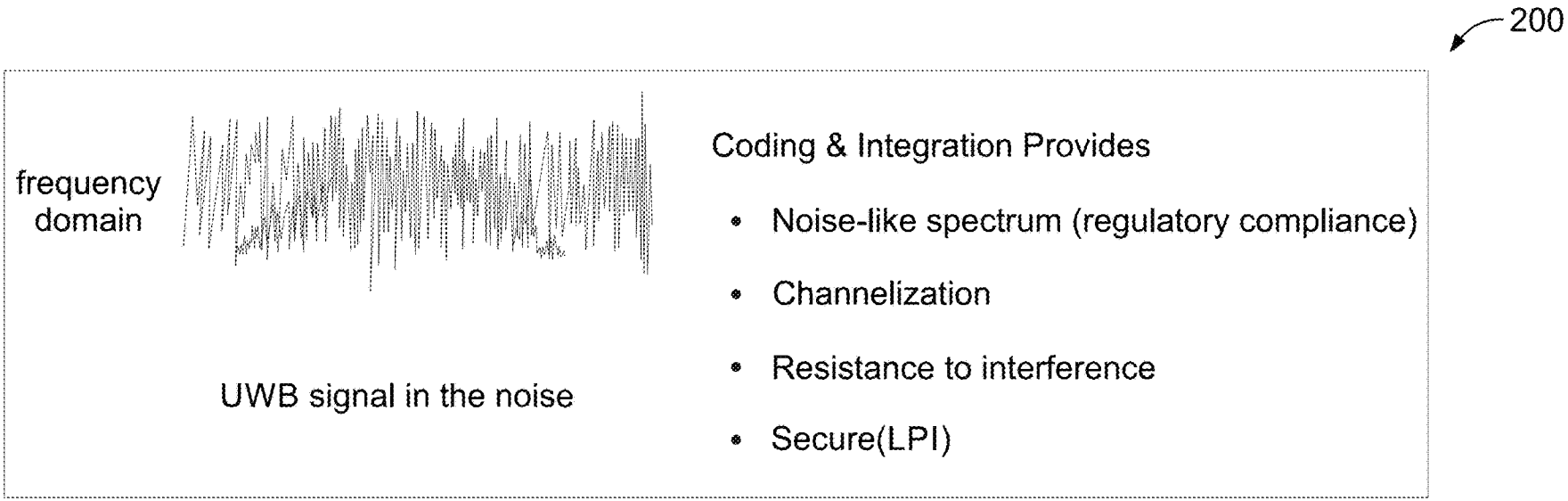
200
frequency domain
UWB signal in the noise
Coding & Integration Provides
• Noise-like spectrum (regulatory compliance)
• Channelization
• Resistance to interference
• Secure(LPI)

FIG. 2

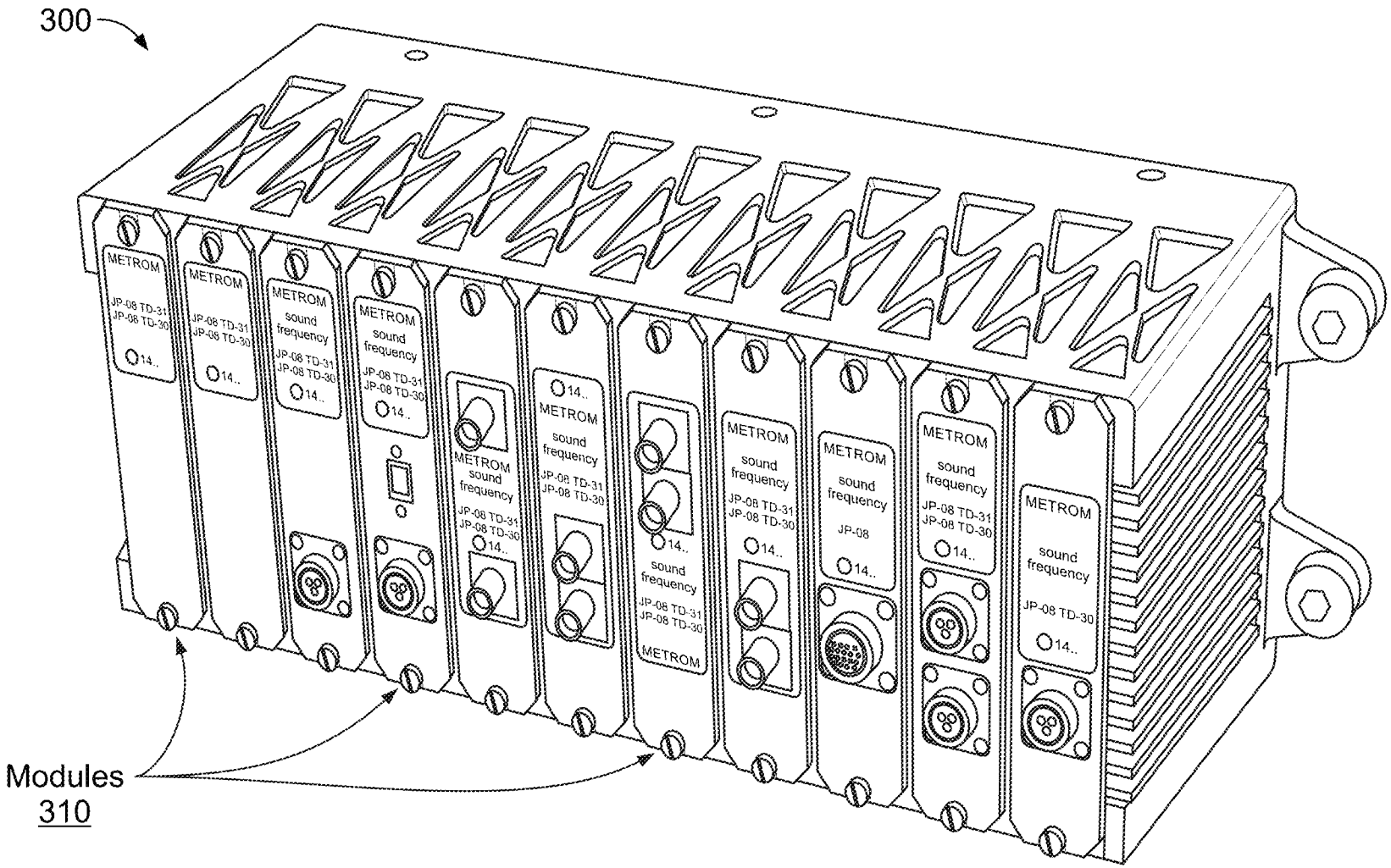
300
METROM
JP-08 TD-31
JP-08 TD-30
14..
METROM
sound
frequency
JP-08
Modules
310

FIG. 3

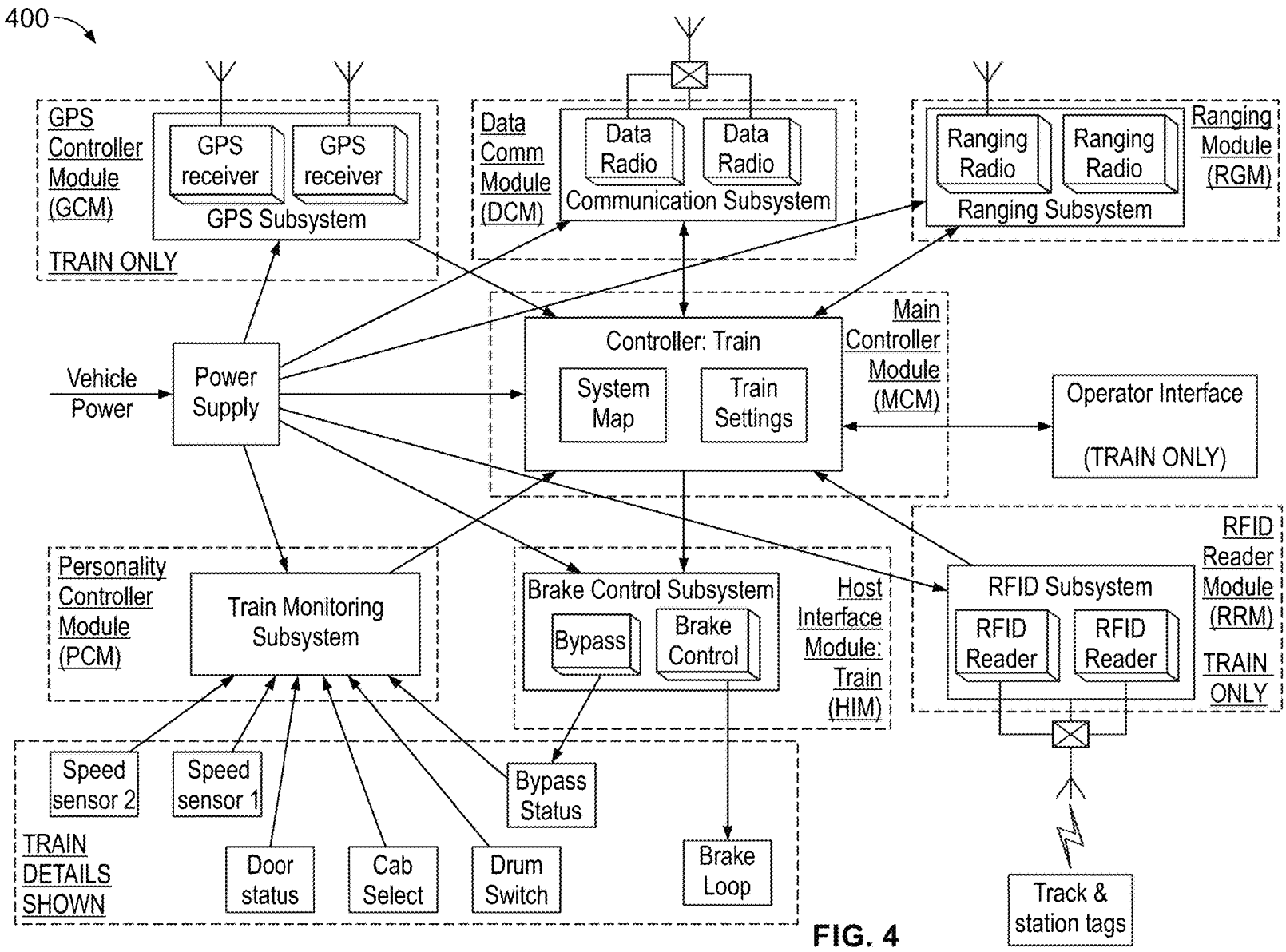
400
GPS Controller Module (GCM)
GPS receiver
GPS receiver
GPS Subsystem
TRAIN ONLY
Data Comm Module (DCM)
Data Radio
Data Radio
Communication Subsystem
Ranging Radio
Ranging Radio
Ranging Subsystem
Ranging Module (RGM)
Vehicle Power
Power Supply
Controller: Train
System Map
Train Settings
Main Controller Module (MCM)
Operator Interface
(TRAIN ONLY)
Personality Controller Module (PCM)
Train Monitoring Subsystem
Brake Control Subsystem
Bypass
Brake Control
Host Interface Module: Train (HIM)
RFID Subsystem
RFID Reader
RFID Reader
RFID Reader Module (RRM)
TRAIN ONLY
Speed sensor 2
Speed sensor 1
Bypass Status
TRAIN DETAILS SHOWN
Door status
Cab Select
Drum Switch
Brake Loop
Track & station tags

FIG. 4

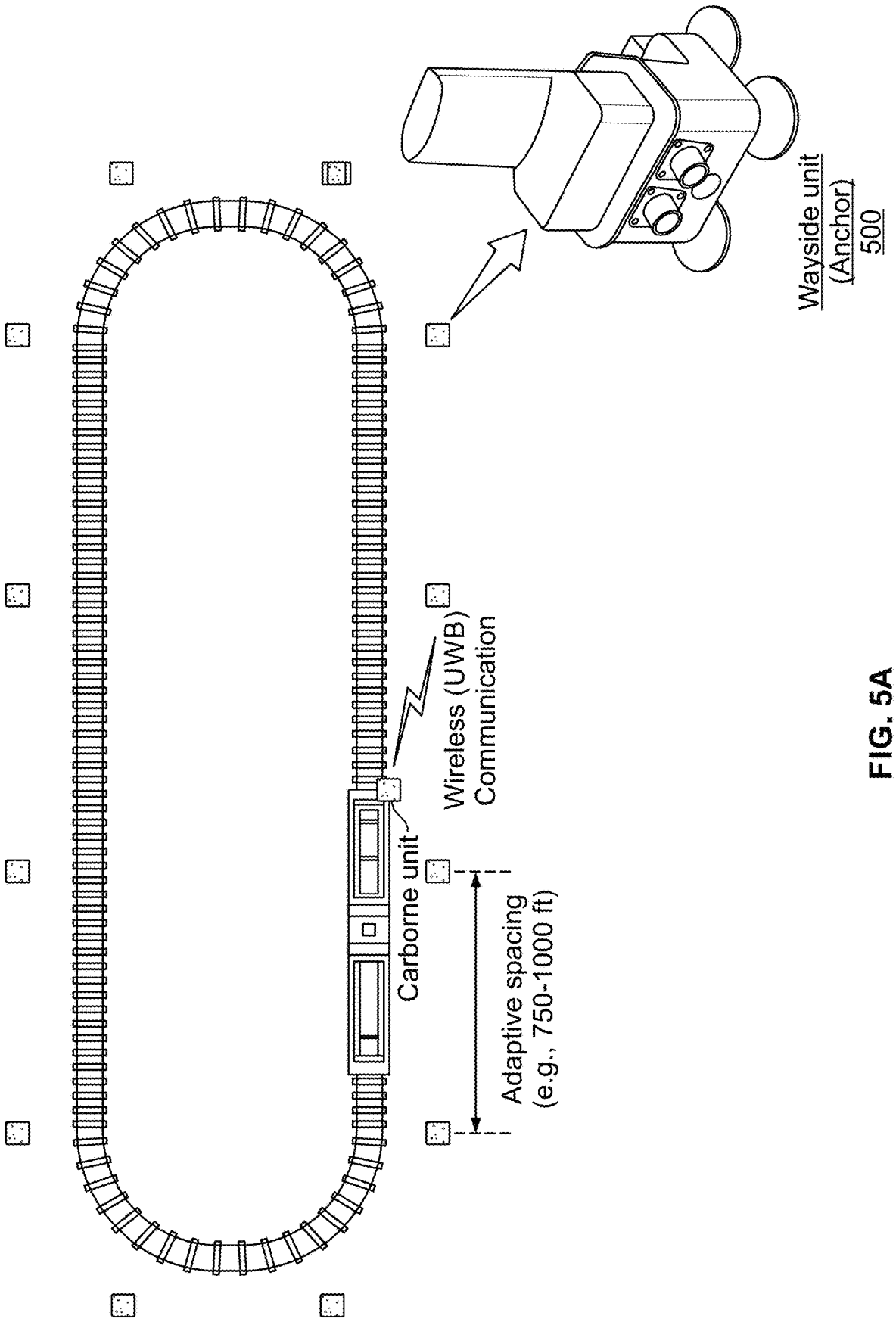
Wayside unit
(Anchor)
500
Wireless (UWB)
Communication
Carborne unit
Adaptive spacing
(e.g., 750-1000 ft)

FIG. 5A

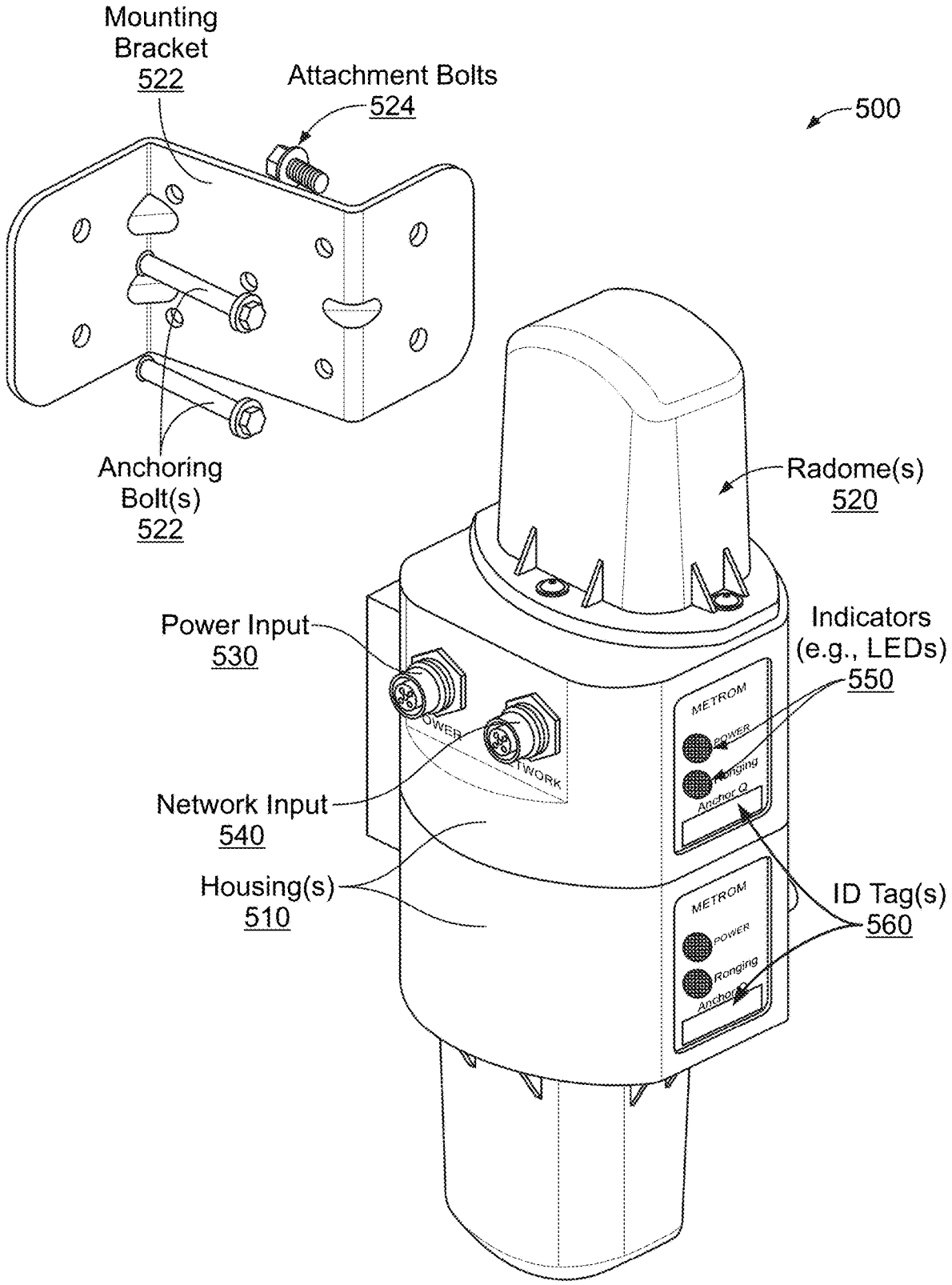
Mounting Bracket 522
Attachment Bolts 524
500
Anchoring Bolt(s) 522
Radome(s) 520
Power Input 530
Indicators (e.g., LEDs) 550
Network Input 540
Housing(s) 510
ID Tag(s) 560
METROM
POWER
Ranging
Anchor Q
METROM
POWER
Ranging
Anchor Q

FIG. 5B

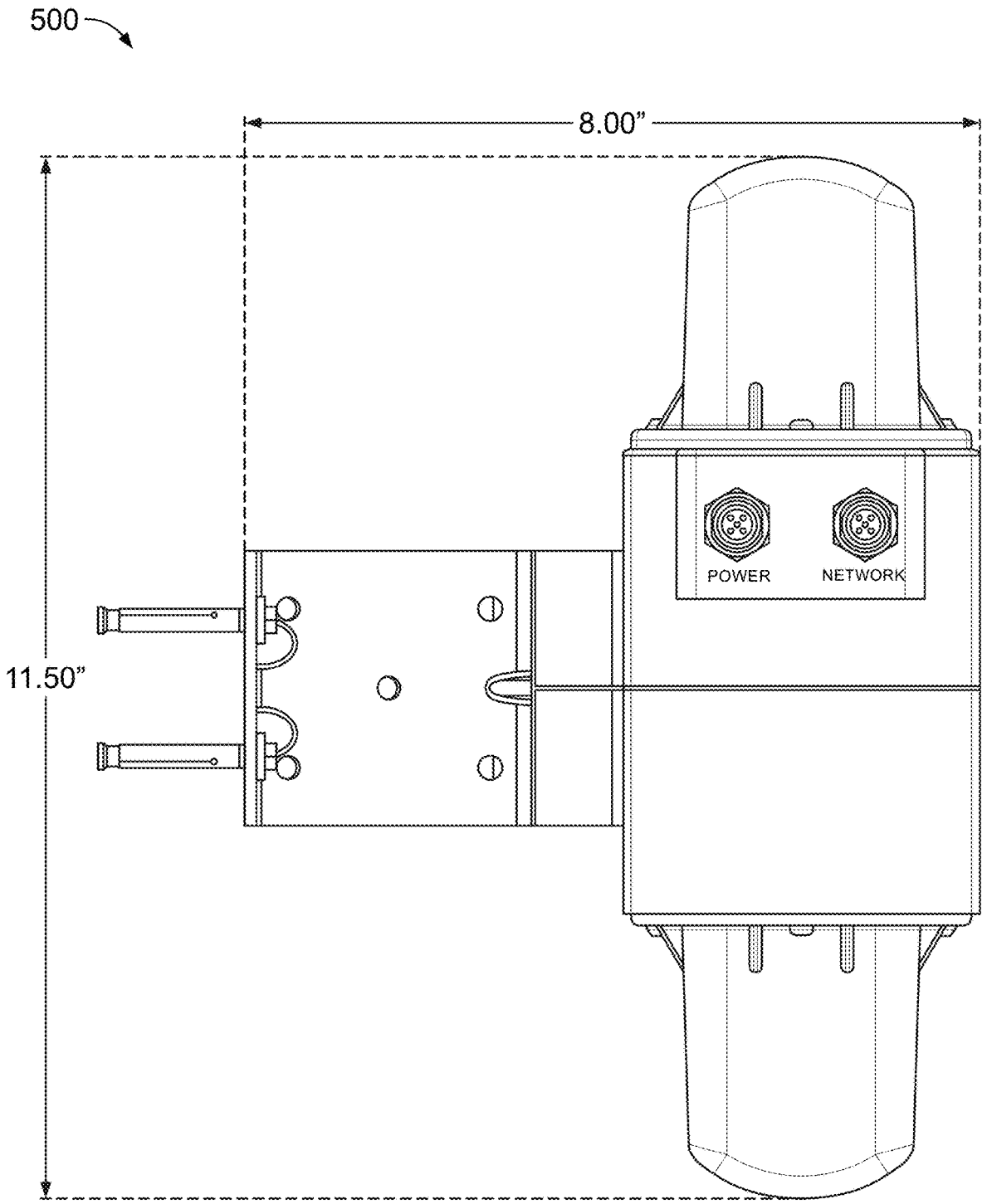

FIG. 5C

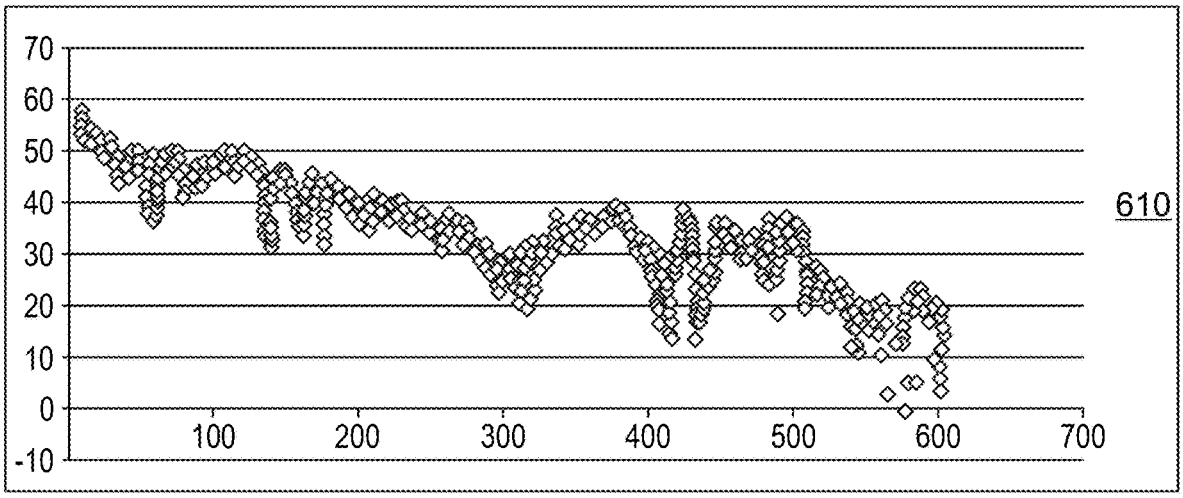
70
60
50
40
30
20
10
0
-10
100
200
300
400
500
600
700
610

FIG. 6A

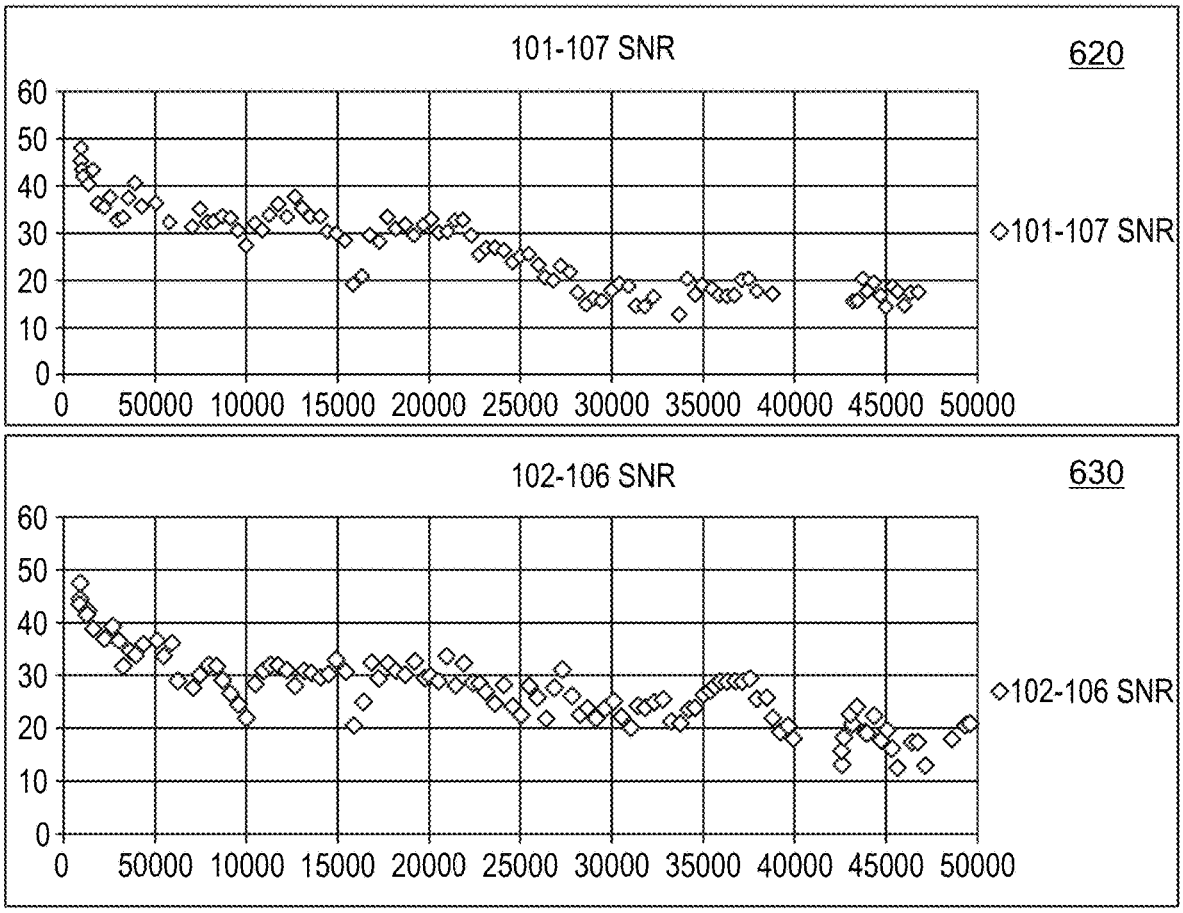
101-107 SNR
620
60
50
40
30
20
10
0
0
50000
10000
15000
20000
25000
30000
35000
40000
45000
50000
◇101-107 SNR
102-106 SNR
630
60
50
40
30
20
10
0
0
50000
10000
15000
20000
25000
30000
35000
40000
45000
50000
◇102-106 SNR

FIG. 6B

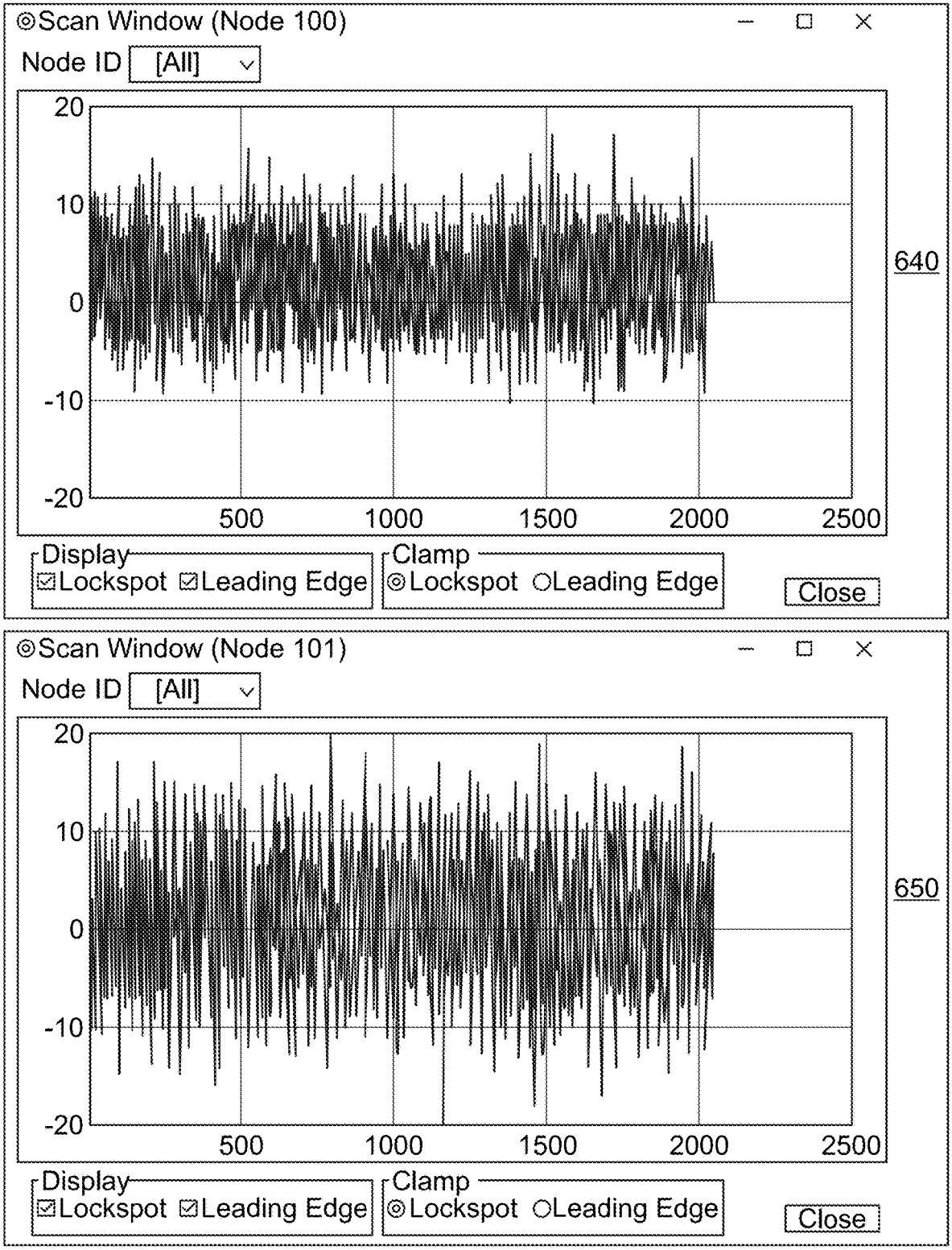
Scan Window (Node 100)
Node ID [All]
20
10
0
-10
-20
500
1000
1500
2000
2500
640
Display
Lockspot Leading Edge
Clamp
Lockspot Leading Edge
Close
Scan Window (Node 101)
Node ID [All]
20
10
0
-10
-20
500
1000
1500
2000
2500
650
Display
Lockspot Leading Edge
Clamp
Lockspot Leading Edge
Close

FIG. 6C

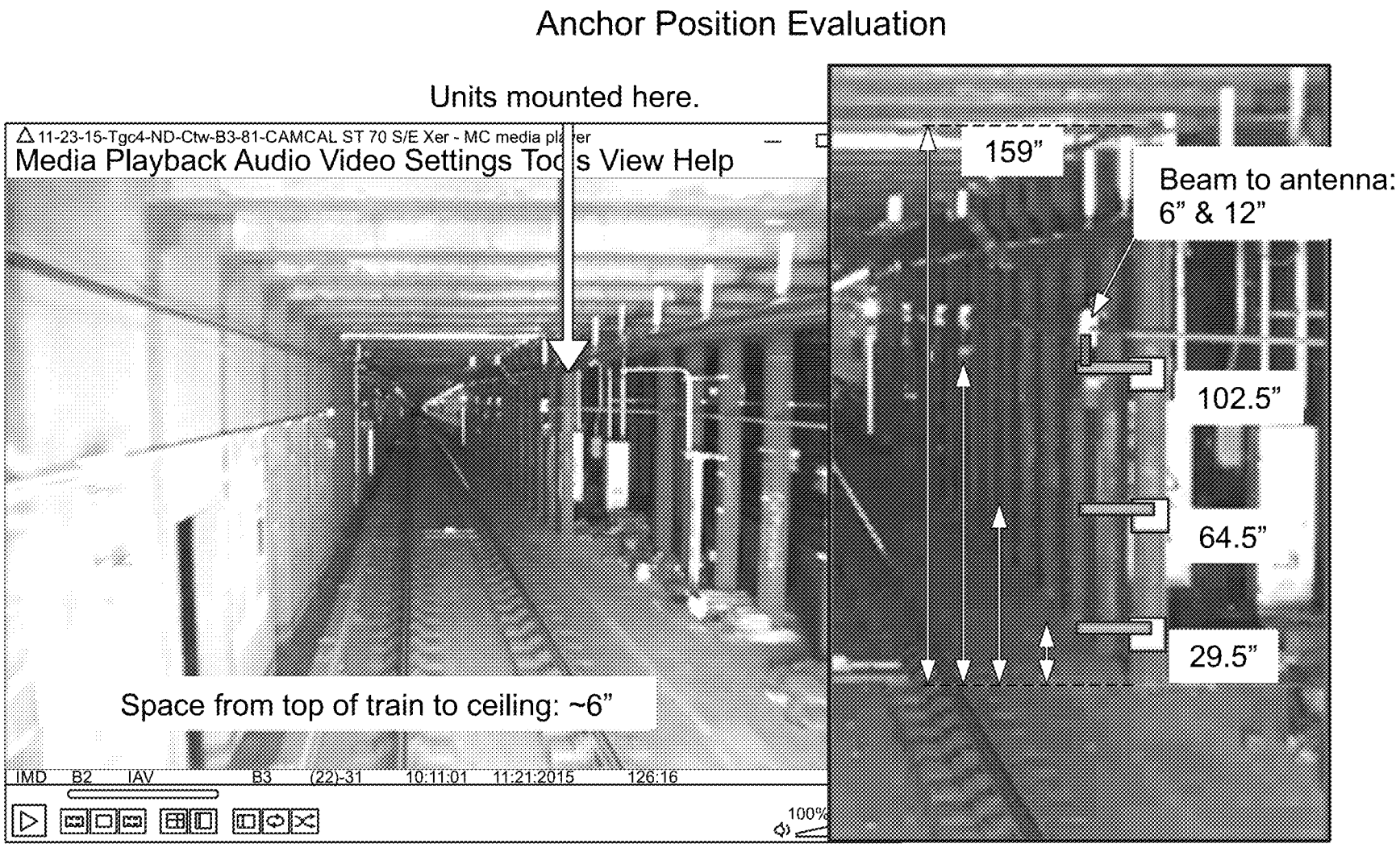
Anchor Position Evaluation
Units mounted here.
11-23-15-Tgc4-ND-Ctw-B3-81-CAMCAL ST 70 S/E Xer - MC media player
Media Playback Audio Video Settings Tools View Help
Space from top of train to ceiling: ~6"
IMD B2 IAV B3 (22)-31 10:11:01 11:21:2015 126:16
100%
159"
Beam to antenna:
6" & 12"
102.5"
64.5"
29.5"

FIG. 7

PTCS Redundant Sensing Technologies

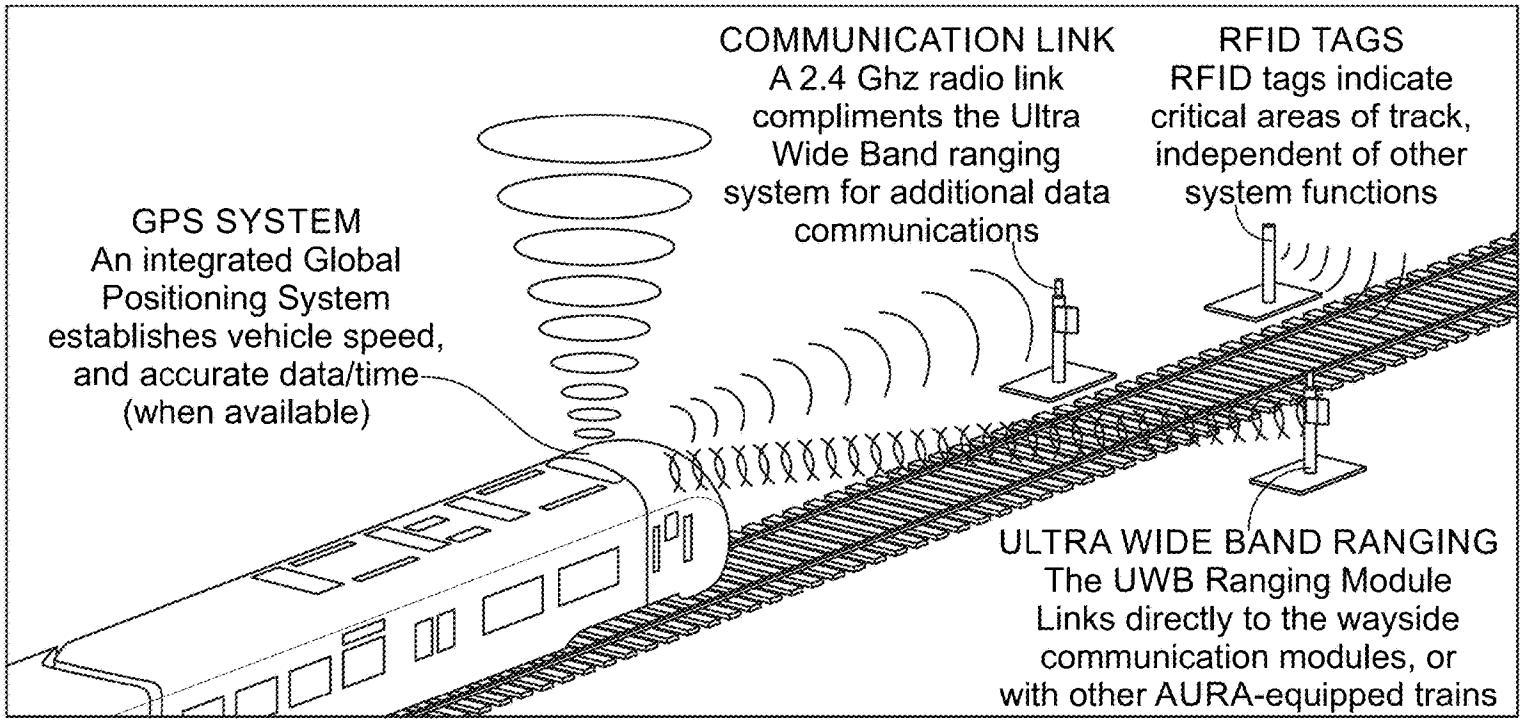

Sensor System	Primary Function	Additional Function
Ultra Wide-Band Transponder (UWB)	Distance Measurements	Data Con / Speed Determination
	Data Communication	GPS-based Distance Measurement
2.4 Ghz Spread Spectrum Radio	Track Location / Track info	Wheel Sensor Cal / Train Position / Range Verification
RFID	Train Position in Surface Track	
WAAS GPS		RTC Clock Cal / Diagnostics
Train Speed	Speed Measurements	Position Dead-reckoning

FIG. 8

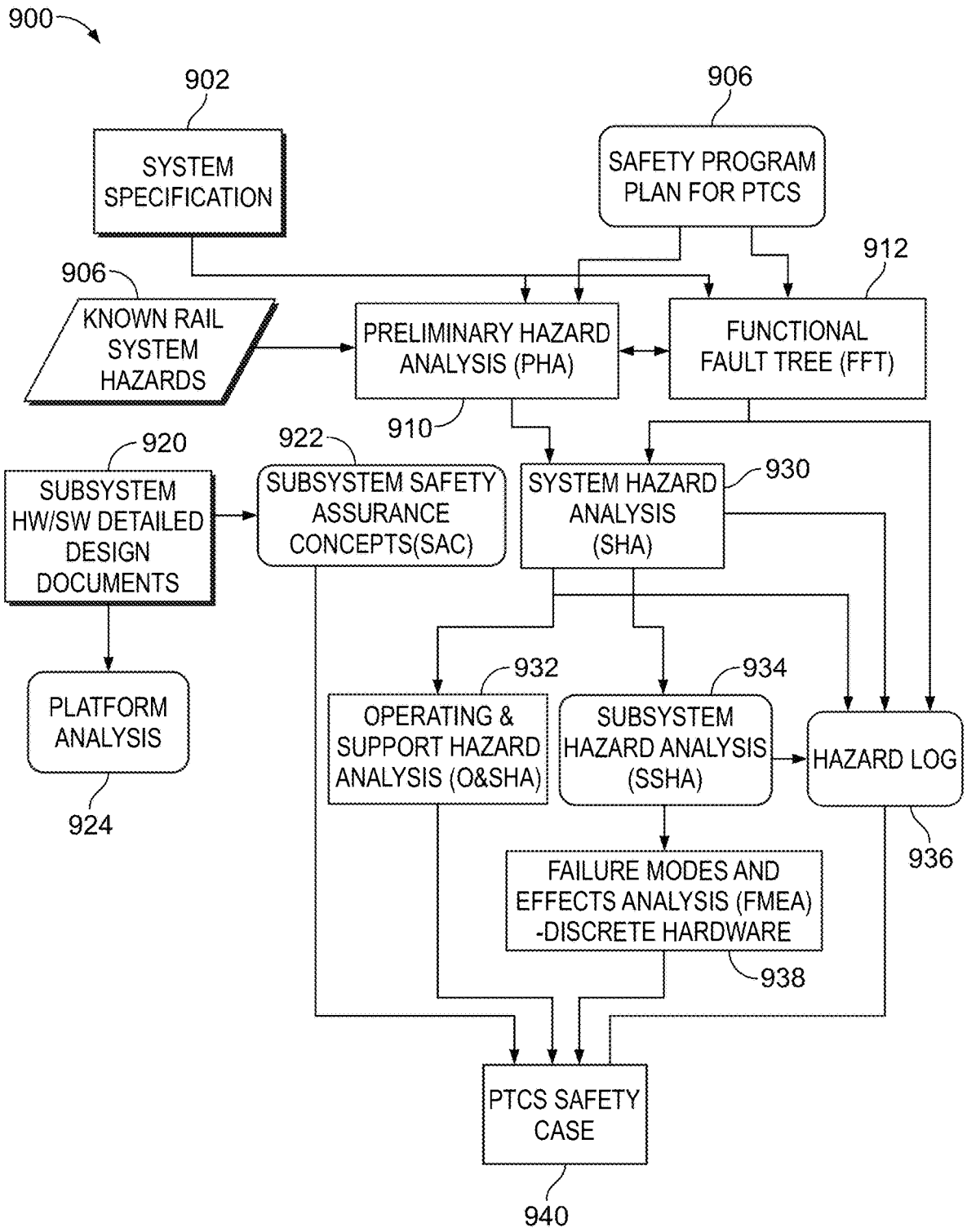
900
902
SYSTEM SPECIFICATION
906
SAFETY PROGRAM PLAN FOR PTCS
906
KNOWN RAIL SYSTEM HAZARDS
PRELIMINARY HAZARD ANALYSIS (PHA)
910
FUNCTIONAL FAULT TREE (FFT)
912
920
SUBSYSTEM HW/SW DETAILED DESIGN DOCUMENTS
922
SUBSYSTEM SAFETY ASSURANCE CONCEPTS(SAC)
SYSTEM HAZARD ANALYSIS (SHA)
930
PLATFORM ANALYSIS
924
932
OPERATING & SUPPORT HAZARD ANALYSIS (O&SHA)
934
SUBSYSTEM HAZARD ANALYSIS (SSHA)
HAZARD LOG
936
FAILURE MODES AND EFFECTS ANALYSIS (FMEA) -DISCRETE HARDWARE
938
PTCS SAFETY CASE
940

FIG. 9

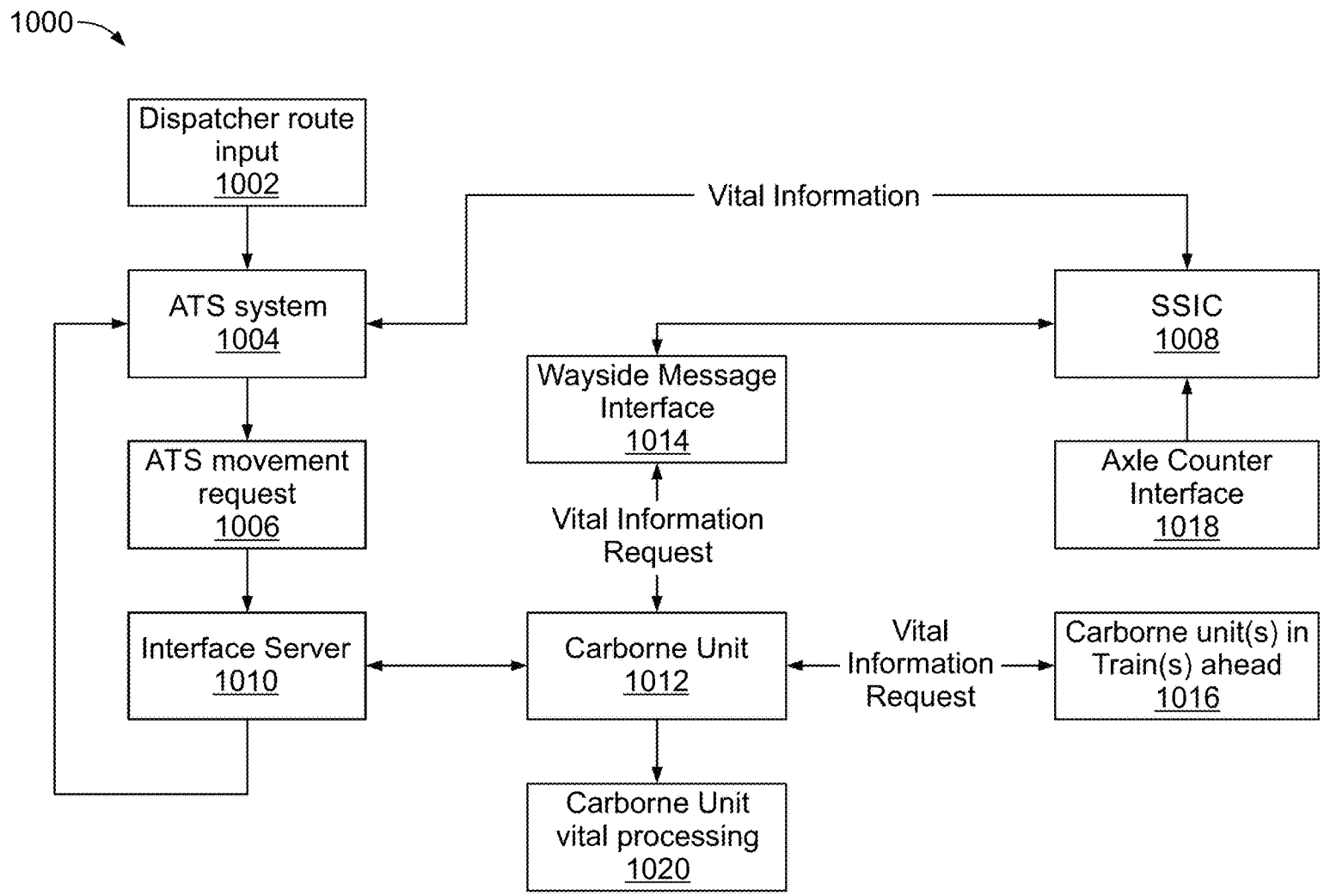
1000
Dispatcher route input 1002
ATS system 1004
ATS movement request 1006
Interface Server 1010
Vital Information
Wayside Message Interface 1014
Vital Information Request
Carborne Unit 1012
Carborne Unit vital processing 1020
Vital Information Request
SSIC 1008
Axle Counter Interface 1018
Carborne unit(s) in Train(s) ahead 1016

FIG. 10

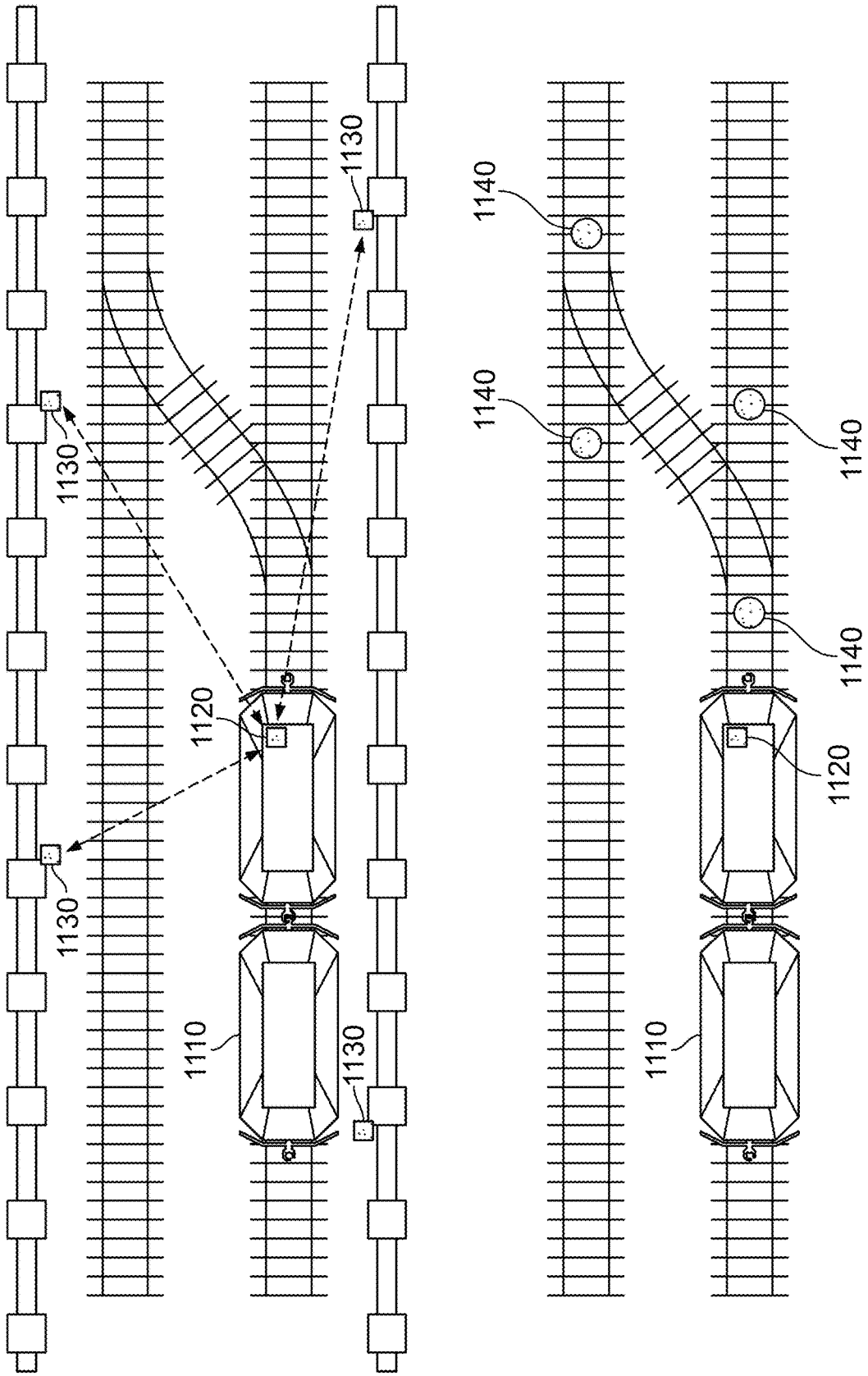

FIG. 11

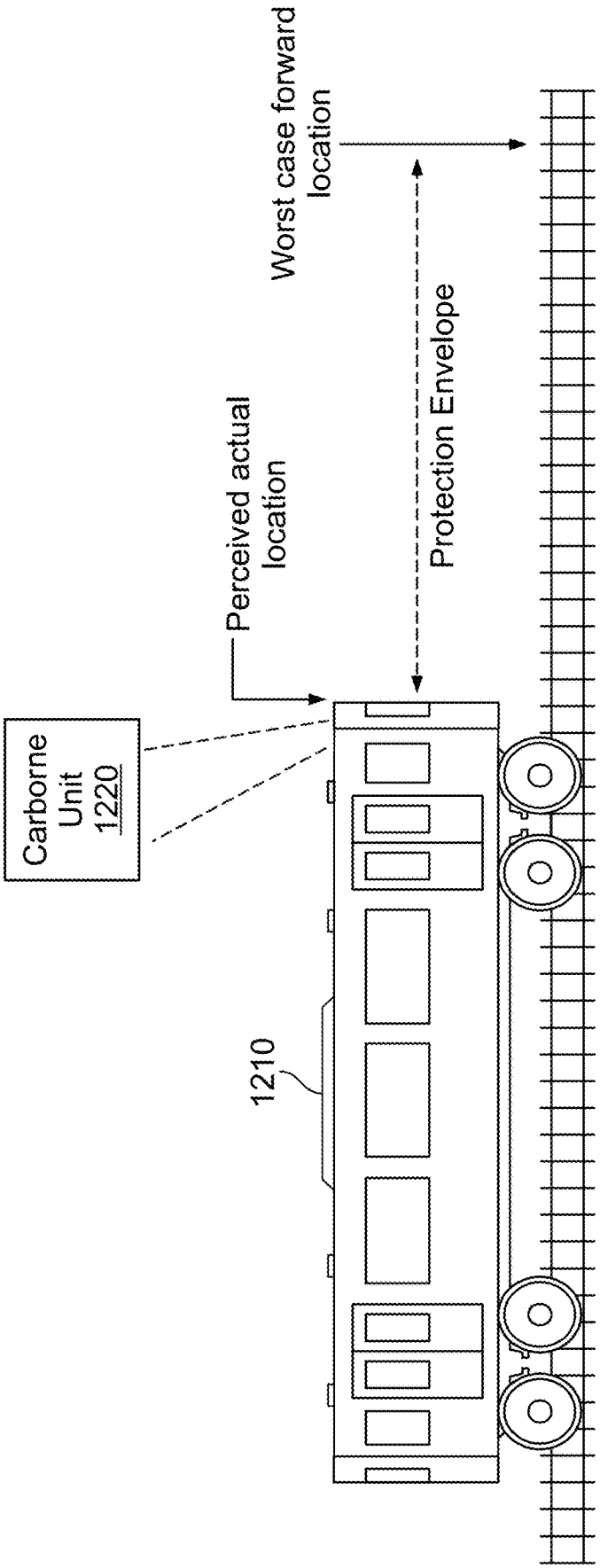
Carborne Unit 1220
Perceived actual location
Worst case forward location
Protection Envelope
1210

FIG. 12A

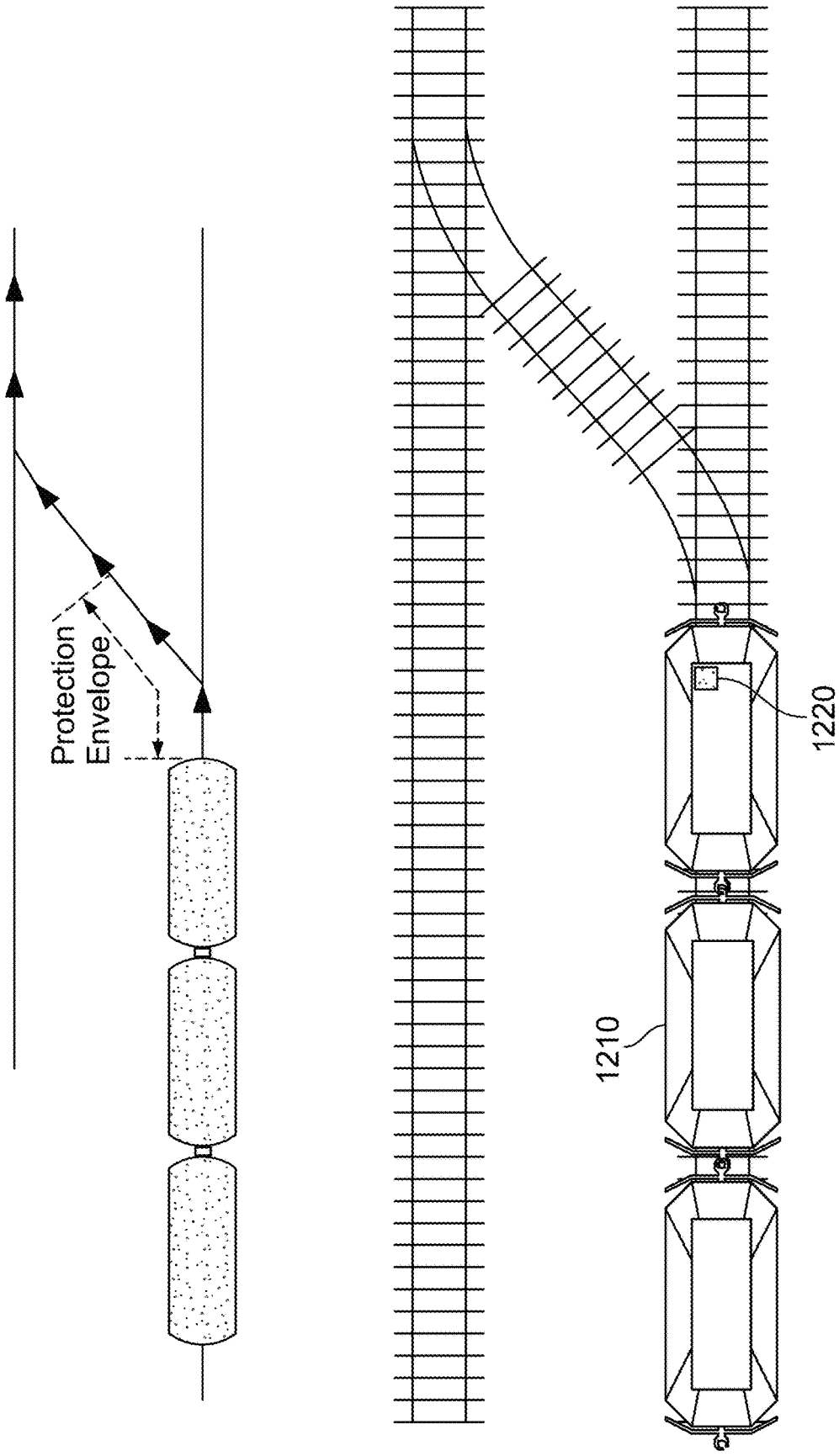

FIG. 12B

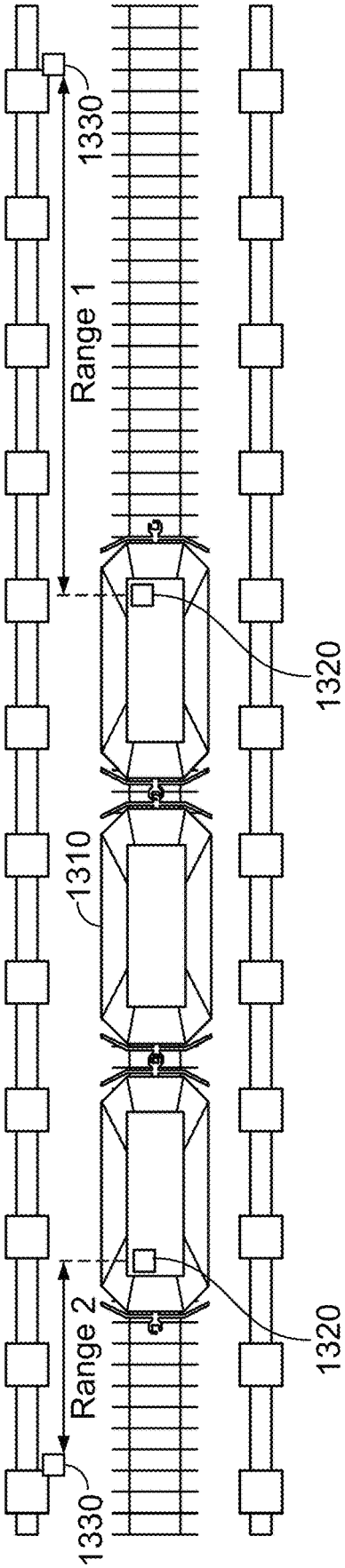

FIG. 13

METHODS AND SYSTEMS FOR DECENTRALIZED RAIL SIGNALING AND POSITIVE TRAIN CONTROL

CLAIM OF PRIORITY

This patent application is a continuation of U.S. patent application Ser. No. 16/290,576, filed on Mar. 1, 2019, which claims priority to U.S. Provisional Patent Application Ser. No. 62/637,774, filed on Mar. 2, 2018, and which is a continuation-in-part of U.S. patent application Ser. No. 16/055,905, filed on Aug. 6, 2018, which in turn claims priority to U.S. Provisional Patent Application Ser. No. 62/541,454, filed on Aug. 4, 2017. Each of the above identified applications is hereby incorporated herein by reference in its entirety.

TECHNICAL FIELD

Aspects of the present disclosure relate to control technologies and solutions in conjunction with railway systems. More specifically, various implementations of the present disclosure relate to methods and systems for decentralized rail signaling and positive train control.

BACKGROUND

Various issues may exist with conventional approaches for controlling trains. In this regard, conventional systems and methods, if any existed, for controlling trains particularly in mass transit systems, may be costly, inefficient, and cumbersome. Further limitations and disadvantages of conventional and traditional approaches will become apparent to one of skill in the art, through comparison of such systems with some aspects of the present disclosure as set forth in the remainder of the present application with reference to the drawings.

BRIEF SUMMARY

System and methods are provided for decentralized rail signaling and positive train control, substantially as shown in and/or described in connection with at least one of the figures, as set forth more completely in the claims.

These and other advantages, aspects and novel features of the present disclosure, as well as details of an illustrated embodiment thereof, will be more fully understood from the following description and drawings.

BRIEF DESCRIPTION OF THE DRAWINGS

FIG. **1** illustrates an example layout of a train control system, in accordance with the present disclosure.

FIG. **2** illustrates an example output of frequency analysis of ultra-wideband (UWB) signals during example use in a train control system, in accordance with the present disclosure.

FIG. **3** illustrates an example carborne unit for use in a train control system, in accordance with the present disclosure.

FIG. **4** illustrates an example block-based implementation of train control system, in accordance with the present disclosure.

FIGS. **5**A-**5**C illustrate an example wayside unit and an example deployment of such units in a train control system, in accordance with the present disclosure.

FIGS. **6**A-**6**C illustrate various example performance assessments of ultra-wideband (UWB) communication within an existing transit system, used in a train control system, in accordance with the present disclosure.

FIG. **7** illustrates various example anchor positions when deploying, within an existing transit system, a train control system, in accordance with the present disclosure.

FIG. **8** illustrates use of redundant integrated sensing technologies in a train control system, in accordance with the present disclosure.

FIG. **9** illustrates an example safety program flow chart for creating safety profiles (cases) for use during operation of a train control system, in accordance with the present disclosure.

FIG. **10** illustrates an example message and information exchange flow chart in a transit systems that utilizes PTCS-2 based components, in accordance with the present disclosure.

FIG. **11** illustrates an example use scenario for utilizing a PTCS-2 based system for track identification, in accordance with the present disclosure.

FIGS. **12**A and **12**B illustrate example use scenarios for utilizing a PTCS-2 based system for establishing and maintaining train location with protection envelope, in accordance with the present disclosure.

FIG. **13** illustrates example use scenarios for utilizing a PTCS-2 based system for speed determination, in accordance with the present disclosure.

DETAILED DESCRIPTION

As utilized herein the terms "circuits" and "circuitry" refer to physical electronic components (e.g., hardware), and any software and/or firmware ("code") that may configure the hardware, be executed by the hardware, and or otherwise be associated with the hardware. As used herein, for example, a particular processor and memory (e.g., a volatile or non-volatile memory device, a general computer-readable medium, etc.) may comprise a first "circuit" when executing a first one or more lines of code and may comprise a second "circuit" when executing a second one or more lines of code. Additionally, a circuit may comprise analog and/or digital circuitry. Such circuitry may, for example, operate on analog and/or digital signals. It should be understood that a circuit may be in a single device or chip, on a single motherboard, in a single chassis, in a plurality of enclosures at a single geographical location, in a plurality of enclosures distributed over a plurality of geographical locations, etc. Similarly, the term "module" may, for example, refer to a physical electronic components (e.g., hardware) and any software and/or firmware ("code") that may configure the hardware, be executed by the hardware, and or otherwise be associated with the hardware.

As utilized herein, circuitry or module is "operable" to perform a function whenever the circuitry or module comprises the necessary hardware and code (if any is necessary) to perform the function, regardless of whether performance of the function is disabled or not enabled (e.g., by a user-configurable setting, factory trim, etc.).

As utilized herein, "and/or" means any one or more of the items in the list joined by "and/or". As an example, "x and/or y" means any element of the three-element set {(x), (y), (x, y)}. In other words, "x and/or y" means "one or both of x and y." As another example, "x, y, and/or z" means any element of the seven-element set {(x), (y), (z), (x, y), (x, z), (y, z), (x, y, z)}. In other words, "x, y and/or z" means "one or more of x, y, and z." As utilized herein, the term

"exemplary" means serving as a non-limiting example, instance, or illustration. As utilized herein, the terms "for example" and "e.g." set off lists of one or more non-limiting examples, instances, or illustrations.

In accordance with the present disclosure, trains, particularly trains operating under certain conditions—e.g., trains operating in transit systems, may be controlled in enhanced manner, particularly by allowing for and supporting mostly decentralized control of trains and operations thereof. This may be done, e.g., by incorporating use of low-cost technology, such as ultra-wideband (UWB) based solutions in controlling trains operating within transit systems, and functions thereof (e.g., safety and/or operation related functions). In this regard, there may be a large gap in available solutions for transit rail signaling systems, with few options available between the fixed block, trip stop based systems in place at many transit agencies, and available high end solutions, such as communications-based train control (CBTC) based solutions. Use of such high end solutions may be not desirable, for various reasons. In this regard, current CBTC systems, especially in brownfield applications, are expensive, difficult to install, have availability issues, require extensive ongoing maintenance, and do not always provide the headroom improvements which are initially projected.

Accordingly, in various implementations in accordance with the present disclosure, proposed positive train control system-phase 2 (PTCS-2) solutions may allow for filling this gap, while remedying the disadvantages and shortcoming of both legacy offerings. In this regard, PTCS-2 base solutions may provide signaling and train control systems that may encompass all or most of the features of legacy high end solutions (e.g., CBTC systems), but at a fraction of the costs (e.g., system cost, installation cost, etc.) and installation efforts. The PTCS-2 based systems may utilizes ultra-wideband (UWB) based wireless technology to enables the train to communicate with wayside devices, allowing for a "train-centric" control system. In other words, in such PTCS-2 based systems most of the functions may be implemented and/or deployed within the trains rather in the surrounding infrastructure. Such an approach may be advantageous due to reduced costs (e.g., because the use of wireless technology may eliminate and/or reduces the amount of wayside cabling and associated maintenance; and may reduce Carborne wiring, installation effort and equipment cost), while additionally providing a modular-upgradeable signaling system which may be easily customized and accommodate the existing transit agencies' operating rules.

The PTCS-2 based systems may be configured for and/or may enable or support such features and enhancements as collision avoidance, moving block train protection, increased (e.g., doubled) berthing, speed limit adherence, signal adherence, use of braking profiles, RF range testing, train location, speed and direction, signal detection (e.g., moving past red signals), adaptive motion (e.g., reverse moves), worker protection, and dead towing.

In various implementations, the main components of a PTCS-2 based system may comprise the train-borne (or carborne) equipment, wayside equipment (or anchors), and station-mounted equipment (or anchors). The train-borne equipment may comprise, for example, main control rack, mounting hardware, user interface, RFID hardware, train control interfaces, UWB and data communication radios and external antennas. The wayside equipment may comprise such sub-components as ranging and communication anchors, end-of-line, interlocking interfaces, and radios. The station-mounted equipment may comprise such sub-components as ranging anchors (e.g., for precision berthing of trains), communication anchors and/or data interfaces (e.g., cloud based, connected through station located gateways) for external data exchange, etc. Various measures may be incorporated to reduce cost. For example, the components of the PTCS-2 based system may utilize a modular design and may use many of the same components, such as ultra-wideband (UWB) radios.

FIG. **1** illustrates an example layout of a train control system, in accordance with the present disclosure. Shown in FIG. **1** is an example layout of a PTCS-2 based system **100** implemented in accordance with the present disclosure.

As noted above, a PTCS-2 based system is a train-centric system—that is, unlike traditional and/or existing systems (including, e.g., CBTC based systems), this system does not rely on a centralized entity (e.g., "back office") or centralized data structure which must be hard-wired to the system. Rather, as shown in the example implementation illustrated in FIG. **1**, the system provides train-based automated control (e.g., operation, protection, etc.). In this regard, PTCS-2 based systems implemented in accordance with the disclosure (e.g., the PTCS-2 based system **100**) may be configured for utilizing as core technology, a low-cost communication technology, preferably ultra-wideband (UWB), with UWB radios being used for ranging and/or data transfer.

As shown in FIG. **1**, the PTCS-2 based system **100** may comprise carborne units **120** deployed on the train **110**, as well as wayside units **130** deployed near tracks traversed by the trains in the transmit systems. Each of the carborne units **120** and the wayside units **130** may comprise suitable circuitry for implementing various aspects of the present disclosure. In this regard, the each of the carborne units **120** and the wayside units **130** may be configured to performed and/or support various communication, control, processing, etc. functions, and/or may incorporate suitable resources (e.g., hardware and/or software) for facilitating performing such functions. Further, each of the carborne units **120** and the wayside units **130** may be particularly configured for deployment in their respective environments—that is, the carborne units **120** may be optimized for deployment within the trains, and the wayside units **130** may be optimized for deployment on or near the tracks.

For example, each of the carborne units **120** may be configured as a train control system rack, and may comprise user interface components (and support functions related thereto), UWB radios (e.g., primary and secondary), data communications (DataCom) radios (e.g., primary and secondary), UWB antennas (e.g., primary and secondary), and DataCom antennas (e.g., primary and secondary). Each of the wayside units **130** may be configured as an anchor—e.g., for installation on structures near the tracks, such as tunnel walls, signal posts, etc., and may comprise UWB radios, DataCom radios, and components for supporting interactions with wayside message interface (WMI), solid-state interlocking controllers (SSIC), axle counters, data communication system (DCS) (e.g., Ethernet switches, routers, fiberoptics and electrical cable), servers (e.g., diagnostic interface, non-vital messaging), automatic train supervision (ATS) systems, interface servers (e.g., for handling translating ATS messages), etc. The wayside units **130** preferably may be configured with uninterruptible power supplies.

In some implementations, multiple carborne units **120** may be deployed within a single train. In such instances where multiple carborne units **120** are deployed on a single train, typically no more than one carborne unit is deployed within each car, and preferably a number of cars (e.g., 4 car) may be grouped together, with one carborne unit being deployed to serve each such group (or alternatively, two

units, with one unit at the front of the first car in the group and the second unit being deployed at the back of the last car in the group).

Further, in such instances where multiple carborne units **120** are deployed on a single train, one of the carborne units **120** may be configured as lead (or main) unit, with the remaining units being configured as "passive" units, communicating only with the each other and the lead unit—i.e., not handling interaction with other systems, on or off the train. For example, the carborne unit **120** deployed in the main engine cab, where it may be used by the train operator, may be designated as the lead unit. Thus, the lead carborne unit may automatically detect that the cab is the one in control of the train (e.g., via a wired interface to the train cab control panel), and in such manner determines that its cab is the lead unit.

The carborne units **120** may be configured to communicate with one another via wirelessly (e.g., using PTCS-2/UWB based communications). This may be the case even in instances where multiple carborne units **120** are deployed on a single train as it reduces installation cost (by eliminating the need for wired connections between the carborne units). The communications between the carborne units may be done using direct wireless connections between these units, and/or by utilizing other devices (e.g., the wayside units/anchors) to relay data between the carborne units. For example, the carborne units may be configured to communicate wirelessly using the data communication radio (PTCS carborne-wayside link) on the train to the wayside data communication radio, which then relays the messages to the addressed carborne unit, whether on the same train unit, the other unit on the same train, or train-to-train communications to other trains operating in the system. As such data links may already be in use in the PTCS-2 based systems, there would be no additional cost for supporting such intra-car and inter-car link communications.

In some instances, PTCS-2 based systems implemented in accordance with the disclosure (e.g., the PTCS-2 based system **100**) may be configured for supporting interactions with existing infrastructure and/or systems—e.g., railway signaling systems **140**, on-train systems **150** (e.g., sensors such as wheel tachometers, brake systems, etc.), radio-frequency identification (RFID) systems **160** deployed on (or near) tracks and used for safety, etc.

However, in some implementations, some of the interfaces to some of the systems may be eliminated, as the functions PTCS-2 based components may be simplified—e.g., providing only UWB ranging related functions, and as such omit the need to interacted directly with other components in train and/or with non-UWB devices external to the train (e.g., wayside RFID based devices). In such implementations, the PTCS-2 based wayside units may be configured as UWB anchors (as described in more details below), thus eliminating the need to interact with sensors (e.g., tachometers) and/or the wayside/track based RFID systems **160**.

In some instances, PTCS-2 based systems implemented in accordance with the disclosure (e.g., the PTCS-2 based system **100**) may be configured for supporting interactions with other communication networks. For example, as shown in FIG. **1**, the PTCS-2 based system **100** may be configured for supporting communication with (e.g., reception of) satellite signals, such as signals transmitted by positioning satellites (e.g., global positioning system (GPS) based satellites/signals).

In some instances, PTCS-2 based systems implemented in accordance with the disclosure (e.g., the PTCS-2 based system **100**) may be configured for supporting temporary connections (wired and/or wireless) with portable equipment (PE) **180** (e.g., laptops, etc.), which may be used, e.g., for performing such tasks as commissioning, provisioning, and diagnostics in conjunction with the carborne units **120** and/or the wayside units **130**.

As noted above, the core technology utilized in the PTCS-2 based system is low-cost communication technology, preferably ultra-wideband (UWB). Use of UWB technology may be desirable as it allows for broadcasting signals over a wide bandwidth, which offers signal transmission that is virtually unaffected by multi-path distortion, which substantially affects signal integrity in conventional narrow band signals in certain areas that may be particular prevalent in transit systems, such as subway tunnels and urban environments.

UWB-based PTCS-2 solutions may also benefits from using a coherent signal processing approach where trains of pulses integrate the energy from many pulses in increase the signal to noise ratio and extend range and accuracy. For example, use of UWB-based communications may allow for operations at ranges over one half of a mile, and with sub-inch distance accuracy over such range, in either in open air or difficult tunnels environments.

The UWB-based approach may also benefit from having a low probability of intercept (LPI), as the transmit power allowed by the FCC (Federal Communications Commission) is similar to ambient noise floors such that the signal is essentially invisible to a frequency analyzer as shown in FIG. **2**. In this regard, FIG. **2** illustrates a chart **200** corresponding to an example output of frequency analysis of UWB signals during example use in a train control system, in accordance with the present disclosure.

FIG. **3** illustrates an example carborne unit for use in a train control system, in accordance with the present disclosure. Shown in FIG. **3** is an example chassis-based implementation of train-borne (or carborne) unit **300**.

The carborne unit **300** may be a rack based unit, containing one or more swappable modules **310**, configured such that it may be mounted in or close to a cab of a train. Each of the modules **310** may comprise suitable circuitry for supporting particular functions.

Example modules that may be included into the carborne unit **300** may comprise a main control module (MCM), which may comprise control circuitry for the system, GPS (Global Positioning System) controller module (GCM), which may be used for calibration of wheel sensors, verification of other speed measurement systems, and precise updates of the real-time clock when exposed to a satellite link; ranging module (RGM), which contains redundant UWB ranging radios; data communication module (DCM), which is used for providing redundant data channels (e.g., over spread-spectrum links); operator interface module (OIM), which is used for the operator interface display; personality controller module (PCM), which is contains all interfaces unique to the agency such as speed sensor inputs; host interface module (HIM), which is the emergency braking interface and bypass control unique to the agency or vehicle; the service brake module (SBM) which is the service braking interface unique to the agency or vehicle, RFID reader module (RRM), which is the RFID reader interface; power supply module (PSM), which supplies power to rack; and optionally such other modules/components as lidar, radar, and worker protection modules.

A modular rack design may allow for accommodation of variations in requirements (e.g., between different transit agencies) and/or unique train interfaces, with minimal

changes to hardware and software, such that changes to safety certifications are minimized. The other advantage of this approach is modular upgrades, in that an agency may start with a basic safety system and add capabilities though additional module additions at a later date when budgets allow.

In addition to the chassis, other on-train components may be used, such as antennas. For example, one or more antennas may be deployed, such as on the outside of the train, including a redundant-single package UWB-GPS antenna, a data communications (DataCom) antenna (or dual-version for diversity or redundancy), and an optional RFID antenna. The antennas may be configured and/or may have low profile design, cognizant of the size and space restrictions present.

Additional on-train components may include wheel sensors—e.g., wheel odometry inputs which may be furnished either by integrating into existing sensors, or by installing new wheel sensors. To ease the installation costs of wiring wheel sensors, the system is able to operate with only UWB ranging.

The system may include a user interface—e.g., user interface may be specified by the agency. The information displayed is also customer specific. A bypass switch—e.g., a system bypass control may be included, and may be integrated into an existing panel or supplied in its own enclosure; and an optional an RFID tag reading system, which may be used as parallel method for determining track occupation, as well as for temporary speed restrictions and work zones. However, the RFID functions may be provided by UWB-based track determination, and speed restrictions and work zones communicated via the data communications wireless interface, thus eliminating the need for the additional RFID equipment and installation effort.

FIG. **4** illustrates an example block-based implementation of train control system, in accordance with the present disclosure. Shown in FIG. **4** are the major components (represented as blocks), such as the modules and other components described with respect to FIG. **3**, as well as interactions there between and/or functions performed thereby, in an example implementation of a train control system in accordance with the present disclosure. However, some of the components, functions, and/or interactions shown in FIG. **4** may be eliminated in some implementations. For example, in some example PTCS-2 based implementations, the PTCS-2 systems may not include any speed sensors (thus eliminating these components/blocks as shown in FIG. **4**, within the "Train Details Shown" block). Also, in some example PTCS-2 based implementations, the PTCS-2 systems may not include any RFID tags (thus eliminating the "RFID Reader Module" component/block shown in FIG. **4**). Also, in some example PTCS-2 based implementations, the PTCS-2 systems may also include a serial link or other communications link-based service brake interface, in addition to the simple (vital) brake loop interface shown in FIG. **4**.

FIGS. **5**A-**5**C illustrate an example wayside unit and an example deployment of such units in a train control system, in accordance with the present disclosure. In this regard, shown in FIG. **5**A is an example wayside unit (or anchor) **500** and an example deployment of a number of such anchors in relation to tracks (using a simplistic loop track for illustration purposes) in an example transit system.

The anchors (or wayside units) may comprise suitable circuitry and related components (e.g., radios, antennas, etc.) for supporting communicating in a particular manner, specifically UWB transmissions (ranging) with the train—e.g., PTCS-2 based carborne units deployed thereon. In some instances, anchors (e.g., anchor **500** as shown in FIG. **5**A) may support circuitry (and related components) for other forms or types of communications, beside UWB ranging related communications. For example, an anchor (e.g., anchor **500** as shown in FIG. **5**A) may comprise at least two wireless systems: one for UWB ranging and the other optimized for high-speed data transfer (e.g., DataCom), being configured for spread spectrum transmissions for data communication (thus enabling communication of large size data).

Alternatively (and preferably), the anchors may be configured as solely UWB ranging based devices, with separate devices handling the data communications (e.g., DataCom anchors). In such implementations, the UWB ranging anchors may be connected to the DataCom anchors, to use them to communicate with other components in the transit system and/or to facilitate large data transfers. Such design may be preferable as it would allow for use and deployment of a larger number of UWB anchors compared to DataCom anchors (or devices).

The anchors may be integrated (directly and/or via other devices, such as dedicated DataCom devices) with signals, position location, data relay devices, and interlocking interfaces. Anchor design is generally customized for the agency taking into consideration such as power availability, size constraints, integration with existing assets and functionality.

The anchors communicate with each other by "hopping" data from anchor to anchor, either wireless data hopping using primarily the data communications radios, or for increased data throughput, via a cabled interface such as fiber optic Ethernet. The anchors may also perform UWB ranging to each other, for diagnostic purposes, allowing mounting location integrity checks. The anchors support wireless communications from anchor to train as well, with all communication being bi-directional. Anchors may also interface external to the line by using gateways located at stations for cloud based communication. Placement of anchors is dependent upon the geography along the track, and the various features (subway with smooth walls, subway with "castellated" walls, open air, etc.).

The anchors may be spaced to ensure optimal performance, such as based on pertinent factors—e.g., the layout of the transit network (or parts thereof), presence of nearby structures, etc. For example, the anchors may be spaced between 300-1,000 feet. The data communication anchors (if any) may be spaced even more (e.g., between 500 and 1,500 feet), as fewer of them are needed.

An example implementation of the anchor **500** (particularly when implemented as an UWB ranging anchor) is illustrated in FIG. **5**B. In this regard, as shown in FIG. **5**B, the anchor **500** may comprise housing(s) **510** for enclosing various components of the anchor **500**. The housing **510** may be constructed to be suitable for the intended operation environment and/or conditions of the anchor **500** (e.g., being constructed to be very rigid, to withstand accidental impacts during deployment and/or when knocked down), and to withstand environmental conditions associated with outside/external use (e.g., rain, extreme cold/heat, etc.). For example, the housing **510** may be constructed from coated aluminum. The anchor **500** may also have radome(s) **520** (constructed from, e.g., polycarbonate material), which may be attached to the housing(s) **510**. The radome(s) **520** may be used to enclose components that may need to be implemented external to the housing **510**, such as antennas, used

in wirelessly transmitting and/or receiving signals, such as during UWB ranging related communications with PTCS-2 based carborne units).

The anchor **500**/housing **510** may incorporate a power input (connector/port) **530**, which may be used in connecting the anchor **500** to a power source (e.g., the power grid) to power the anchor **500**. The anchor **500**/housing **510** may also incorporate a network input (connector/port) **540**, which may be used in connecting the anchor **500** to one or more wired-based networks (e.g., fiber). In this regard, the power input **530** and the network input **540** may be implemented adaptively to optimize performance. For example, the power input **530** and the network input **540** may use M12 connectors. In this regard, the power input **530** may utilize, for example, an A-Code connector, while the network input **540** may utilize a D-Code connector to prevent mismatching during installation.

The anchor **500**/housing **510** may incorporate means for providing indications or other information. For example, indicators (e.g., LEDs) **550** may be incorporated into the housing **510**, and may be configured to convey/indicate certain information (e.g., UWB radio status). Further, identification (ID) tag(s) **560** may be affixed/overlaid on a part of the outside of the housing **510**, showing identification number(s) of the anchor **500**.

As noted, the anchors may comprise or be coupled to support structures, to enable placement or installation of units. For example, as shown in FIG. **5**B, the anchor **500** may installed using a mounting bracket **520**, which may be configured to attachment to the anchor **500** (e.g., via attachment bolts **524**) on one side, and for anchoring on a structure (e.g., wall, via anchoring bolts **522**, for example) on the other side. For example, the attachment bolts **524** may be ¼-20 bolts, whereas the anchoring bolts **522** may be ¼-20 concrete anchor bolts.

Support structures, such as the mounting bracket **520**, may be configured for unique mounting environments and/or to accommodate particular mounting/installation requirements. For example, the mounting bracket **520** may be configured to allow mounting the anchor **500** in particular manner—e.g., being structured such that it allows mounting the main assembly (the housing **510**) at particular distance, such as 8", from the wall where it is to be mounted. Further, the mounting bracket **520** may incorporate holes for allowing for cable management and tie-down straps, thus ensuring that when the cables are connected, they should not inhibit the line of sight of the antennas. FIG. **5**C illustrates the combination of the anchor **500** and the mounting bracket **520** attached together.

A description of operations in an example implementation of a train control system in accordance with the present disclosure (e.g., the system described with respect to FIGS. **1**-**5**) is now provided.

In operation, the PTCS-2 based system initially runs through a self-checking protocol, confirming all aspects of the hardware and software are present and communicating. As the train leaves a yard or storage facility, the PTCS-2 based system may also self-check that the UWB ranging system, the data communications system, optional RFID, and optional wheel odometer systems are also functioning within specifications.

The operator may choose a route which is stored in train-borne (or carborne) equipment/unit, or in centralized control configurations, the route is chosen remotely by the central dispatcher using Automatic Train Supervision (ATS). The route is communicated to the train using the wireless data communications system. This information includes route number, and other schedule-related information.

As the train progresses, the train position and speed are determined by the train by ranging with wayside UWB anchors. As a train passes, it is able to determine its absolute location by the ID number of the anchor and referencing the distance to that anchor with the on-board track map stored in non-volatile memory. The train may also determine the speed and direction of movement by measuring the UWB ranging delta separation data of the radio signal from the train to the UWB anchors.

Train separation may be measured by the wayside anchors recording the time and speed at which a train passed, and forwarding this data through each end of the network by "hopping" the data from anchor to anchor to other trains in the system. This information is stored on the anchors or on centralized computing devices, and transferred to trains as they pass through an area. For decentralized control, train separation is determined by the train obtaining the train IDs in the area from the Wayside Messaging Interface (WMI), and then directly interrogating those trains to determine their location using the data communication network. The train will then act on this information by determining if is safe to continue moving forward, as well as the maximum allowable speed, giving the operator feedback on the user interface. The allowable speed is based upon various items, such as the normal allowable speed limit on the track at that location, any speed temporary restrictions or work zones, the path which the train is programmed to take (switches may require slower operating speed, for example), and by ensuring that the worst case safe braking distance at the determined speeds and directions of both trains which will allow the train to stop before reaching the train ahead.

At interlocking points, the train will interrogate the switch via the wireless data communications system to determine its status, whether it has priority, and if required, trigger operation and receive confirmation of proper switch lining. The system may use both UWB-based and data-communication channels for this interrogation. For example, the status inquiry may be performed via intermediate vital "data clearinghouse," using Wayside Message Interface (WMI).

At stations, the system may perform berthing control (ensuring proper alignment of the train at a station), integrating with door controls, and adjust route schedules by maintaining timetables where required. In addition, the system may be configured to perform at a station (or other location) that corresponds to the end of the line, end of line protection. Further, at stations, or other convenient interfacing locations, data gateways may be implemented to enable remote monitoring and control of the system, connecting the data hopping network (whether wireless or cabled) to remote servers.

Worker protection is accomplished through this system in at least two variations. One means is for track workers to wear either a vest in which the warning system is built-in, or a small module (mobile anchor device) equipped with an UWB based warning device. This UWB device communicates with and/or ranges with the UWB anchors along the track. The detected presence of the track worker(s) is communicated along the data hopping network to other anchors which allow wireless communication of the presence of workers to the train Operator and the train control system (to allow automatic reduction in train speed). In some implementations, an approaching train triggers a warning for the workers through a visible, audible and vibratory warning on their worker worn device. In another variation, the workers have no special worn devices, and instead are

warned by visible and audible warnings from a companion device the workers place in their work zone. In yet another variation, work zones are centrally designated and warning devices are incorporated in the wayside anchors, warning the workers by visible and audible warnings when a train is approaching.

When a train approaches a work zone, whether the zone was centrally designated or automatically detected by wayside or worker-worn devices, the train operator is warned through the train-borne user interface that a worker is present. When workers wear individual devices, the operator may also receive notification of how many workers are present, and if the workers have acknowledged their alarms. This system will also warn and enforce a work zone speed limit automatically when encountering workers. Work or slow zones may also be established temporarily by deploying specific RFID tags (if used by the system) which will notify approaching trains as the train passes the RFID tag. Finally, work or slow zones may also be established by the dispatcher in a remote location using the ATS console, where the data is communicated via the data communication network.

The PTCS-2 based system is designed to be integrated with an operator, who performs normal manual train control, as with the legacy system, however, nearby trains, signal aspects, speed limits, worker protection zones, and interlocking data will all be shown on a customized user interface according to the agencies preferences. The operator will receive warnings when safe operating violations are imminent, offering the operator a chance to rectify the situation. If the operator fails to react appropriately, the PTCS-2 based system will interrupt current operation, and either apply a penalty stop, or reduce speed using the train's service brake. In the event of a penalty stop, the operator must acknowledge the event on the user interface, then may resume normal operation once the PTCS-2 based system has determined it is safe to proceed. The enforcement event will is logged in the integral data recorder for training and or event re-construction.

In some instances, such as in conjunction with vital functions—i.e., functions that are configured for operating in a fail-safe manner, the PTCS-2 based system may interface with emergency brake systems. For example, in the event the train fails to slow sufficiently or quickly enough to ensure safe operation using the train's service brakes, the emergency brake system may be triggered. Once the emergency brake is triggered, the train will come to a complete stop. The operator must initiate a reset procedure on the train, and it must be safe to proceed before normal operation of the train may be resumed. The emergency brake interface uses a simple, fail-safe, redundant relay contact interface to maximize reliability and safety.

Regarding interfacing with existing systems, with respect to the train-borne (or carborne), the PTCS-2 based system may be configured for minimal installation impact on the railcar by limiting the interfaces to the railcar. In an example implementation, the vehicle interfaces may consist of fifteen wires as follows: power supply (two wires, power and ground); wheel sensors—e.g., wheel speed/wheel slip detection (two interfaces, two wires each); direction status—e.g., forward/reverse (one wire); cab enable—e.g., whether the cab is in control or in standby (one wire); direction/cab enable ground (one wire); drum switch—e.g., end or middle car detection (two wires to a switch closure); braking system (two interfaces, one to the propulsion loop, the other to the braking loop, two wires each). In another implementation, automatic train operation interface may also be used, which may enable controlling propulsion in the train. Nonetheless, in some implementations, the PTCS-2 based system may incorporate simplified interface related functions—i.e., may use less interfaces and/or some of the interfaces may be simpler than described above. For example, in some implementations, such interfaces as wheel sensors, direction status, and/or drum switch interfaces may be eliminated. This may be made possible by using the UWB based function to detect or obtain information relating to train speed, direction of movement, and detection of train consist (number of cars).

In some implementations, to initiate the full-service brake, the PTCS-2 based system merely drops the drive to its brake loop and propulsion loop relays, causing the relay contacts to open, which in turn interrupts the braking and propulsion loops on the railcar. A PTCS-2 based system brake initiation appears to the system in the same manner as an open wire in the brake and propulsion loops.

In some implementations, the service brake interface is a data communications bus, such as LonWorks, or Ethernet. In these implementations, the braking rate may be controlled, resulting in improved passenger comfort. For example, in an overspeed condition, the propulsion drive may be removed, and a 30% braking effort applied until the train drops a configurable amount below the allowable speed (such as −2 mph). Then the propulsion control will revert to manual operator control. In a penalty stop condition, a 70% braking effort may be applied, and then the braking effort reduced significantly as the train slows to several mph, allowing the train to stop gently rather than abruptly (or "flare out", as known in the industry).

In some implementations, the PTCS-2 based system may also provide sophisticated braking rate compensation abilities to ensure that when hazards are detected, the system applies the brake in a timely manner. The following factors are considered when determining the point at which brakes are triggered: range distance to the hazard; speed and direction of travel of the host railcar; if the hazard is another railcar, the speed and relative direction of travel of the other railcar (approaching or receding); the braking curve characteristic of the host railcar; the grade of the track; degraded mode operation of the host railcar; (if specified) the track conditions (if wheel slip has been detected, the stopping distance required is extended by an agreed upon margin). Additional compensation factors may include an allowance for the delay in speed measurement detection, the cycle time for vital logic processing, maximum data latency (delays in data delivery), the time delay for output transition of the relay or communication bus, a time delay for propulsion removal, and the time delay for brake activation and braking force brake build-up. Each of these potential delays require enforcement actions to begin earlier, or further away than otherwise necessary

Another compensation must be made for possible "runaway acceleration". In a worst-case scenario, the train could begin maximum acceleration immediately after the current speed is sampled and the processing system calculates from that and other data that the train must brake. The total time delay during this data acquisition, decision, and execution process may result in the train traveling faster than the original speed measurement has indicated. The runaway acceleration compensation assumes that this maximum acceleration has occurred during the execution process to ensure that the train will be capable of stopping prior to a hazard.

The objective of this system is to apply the brakes only when necessary, and only at the point appropriate for the

position and operating conditions. Aspects which increase the anticipated stopping distance include: increased speed of the railcar; another railcar is moving towards the host railcar; railcar(s) operating on a downward grade; railcar(s) braking system degraded, resulting in reduced braking rate; wheel slip has been recently detected.

The braking curve of the railcar has a significant effect on the distance at which braking is initiated. Factors in the normal service braking characteristics include: nominal braking curve, mode change delay, jerk limit, and wheel slip. In this regard, with respect to nominal braking curve, if the braking rate is not constant over (such as 3.5 mph/sec), then the braking rate is broken into zones of differing rates for various speeds. In a simple case, for example, the braking rate is constant over the entire range of operating speed except at low speeds, such as below 4 mph, where a slower braking rate occurs (due to the loss of effective regenerative braking action).

With respect to mode change delay, the railcar braking system may delay the application of brakes by a fixed time interval. This delay is considered in normal service braking distance calculations. If the railcar is accelerating when the trigger point for braking is reached, there will be two mode change delays: accelerating to maintaining speed, and maintaining speed to braking. This adjustment of the braking distance is part of what is called "acceleration compensation". If the railcar is already braking at the time automatic braking is triggered, there will be no mode change delay.

With respect to jerk limit, the railcar service braking system may delay the full application of brakes by application of a jerk limit, such as 3 mph/(sec×sec). The additional delay of the jerk limit factor is also considered for the stopping distance. If the railcar is accelerating at the time of automatic brake application, there are two jerk limit delays which will be added to the braking distance. This is the second part of "acceleration compensation."

With respect to wheel slip, if desired, an additional stopping distance margin may be applied in conditions where wheel slip has been detected recently. Wheel slip may be detected by monitoring multiple independent wheels for speed variations during braking and acceleration. With installations that don't have wheel sensors, wheel slip may be detected by comparing the commanded braking rate to the actual deceleration of the train. The additional stopping margin is not normally applied to prevent the PTCS-2 based system from braking too conservatively and applying the brakes before the operator would normally begin braking. In some instances, the PTCS-2 based system may be configured such that if the call for braking is removed (e.g., by closing the relay contacts), normal control of the vehicle returns to the operator.

PTCS-2 based systems may be configured for optimized power consumption. For example, in some implementations, the train-borne (or carborne) unit and/or the wayside anchor may be implemented to utilize low power. Further, various functions may be disabled when not used. The PTCS-2 based systems may allow for adjusting power consumption, such as based on user preferences, available power supply, etc. Further, PTCS-2 based systems may be configured such that the systems may be adapted to and/or may integrate any available wireless design. Anchor electronics may interface with either an integral design or a supplemental enclosure containing anchor electronics.

In an example implementation, PTCS-2 systems may be configured for supporting UWB ranging related functions. In this regard, a PTCS-2 equipped train may be configured (e.g., via its PTCS-2 based carborne unit) for collecting and updating range data for all relevant targets, such as through a cooperative process initiated by the PTCS-2 based carborne unit to one specific target at a time. The UWB ranging may comprise determining ranges based on UWB signals, with the range between a UWB transmitter and receiver calculated as the time of flight between the transmitter and the receiver (one way) multiplied by the speed of light. UWB ranging may be used in different use scenarios.

For example, UWB ranging may be used for determining location, such as by collecting ranges between a transmitter and at least three receivers, the PTCS-2 based carborne unit may use trilateration to determine relative location of the transmitter when multiple tracks are present. If the location of the receivers is fixed and known, this information can be used to determine the absolute location of the transmitter. In certain conditions, the operating track may be determined using only one anchor, such as where the train passes the anchor at a relatively slow speed. This may be possible, for example, if the anchors for the other tracks are much further away, such as on the opposite side of the other track. Thus, as the train passes the anchor, if the shortest distance measured to the anchor is under a certain value, the train may detect that the anchor identified is associated with the train's operating track (e.g., from a track map).

UWB ranging may also be used for determining speed (or velocity), such as by taking multiple range calculations over a specific time period, thus allowing the distance traveled by the UWB transmitter to be determined and used to calculate the velocity of the UWB transmitter (or an object that includes that UWB transmitter). Speed (or velocity) and location determination from UWB ranging may be checked against, and in some cases processed with, speed and location determined via other mechanisms in order to establish vital train location, speed, and direction.

In an example implementation, PTCS-2 systems may be configured for supporting anchor location related functions. In this regard, a PTCS-2 equipped train may be configured (e.g., via its PTCS-2 based carborne unit) for locating anchors (or wayside devices). In this regard, as noted above, PTCS-2 based train control systems may incorporate anchors as wayside devices, with these anchors being installed along the track. The anchors may be installed at distances determined by the topography of the track at any given location—e.g., anchors may be installed closer together around a curve then they will be on a long straight section of track. The anchors may be used primarily as fixed points for UWB ranging for the purposes of location, direction, and speed determination.

In an example implementation, PTCS-2 systems may be configured for supporting train control system operation related functions. In this regard, a PTCS-2 equipped train may be configured (e.g., via its PTCS-2 based carborne unit) for determining its position using UWB functions—e.g., by using frequent UWB range measurements between an UWB radio of the PTCS-2 based carborne unit (e.g., installed at the front of the train) and fixed UWB anchors (serving as, e.g., absolute references) along the track. For example, the distance to a particular anchor may be measured using two-way time of flight timing measurements. Train reports and queries may be routed via the DCS wireless link, such as to other wayside devices and/or system servers, such as the ATS console for train tracking.

In various instances, trains may report such information as position, speed, direction of travel, and health status to a central server, and may do so periodically—e.g., approximately every second. In some instances, PTCS-2 equipped trains may be configured such that PTCS-2 based carborne

units (particularly the lead units) of each train queries the server to determine the nearest PTCS-2 equipped train ahead. The PTCS-2 based carborne units (particularly the lead unit) in the cab of each train queries the train ahead using vital messaging protocol, confirming its position and length, and queries the appropriate solid-state interlocking controllers (SSIC) to confirm the wheel count for the zone ahead matches the reported occupancy. The lead cab also determines the limit of the safe route ahead from the SSIC interrogation.

In an example implementation, PTCS-2 systems may be configured for supporting train control commissioning related functions. For example, following the installation of the PTCS-2 based train control system, the PTCS-2 based carborne units may be commissioned with train-specific data. For example, the car number hosting each PTCS-2 based carborne unit is stored into the unit (e.g., entered into non-volatile memory of that unit). In addition, the companion car number from the opposite end of the unit may also be stored. In this manner, the PTCS-2 based carborne units on each end of a unit may know the car number of the other cab which are part of the semi-permanently coupled multi-car unit.

In an example implementation, PTCS-2 systems may be configured for supporting train control initialization related functions. In this regard, when a PTCS-2 based train control system is first installed or is initialized, the system may have no awareness of such information as location. This may occur at power up and may potentially occur due to other events during operation, such as where multiple anchors are not responsive. Thus, train control initialization may be performed, where the PTCS-2 based carborne unit may send a broadcast UWB message for all UWB devices (e.g., PTCS-2 anchors) within its wireless range, to announce its presence and identification information. Once the UWB responses from the UWB devices (e.g., anchors) are received, the PTCS-2 based carborne unit commences an individual range measurement with each responding UWB device.

For the inner cars of a multi-car train, at least some of the UWB responses will be from another car, and not from an anchor (or wayside unit). For example, a PTCS-2 based carborne unit installed on inner car may receive a response from the adjacent cab of the coupled unit, which will include a range measurement and its car number. The resulting range measurement between those UWB devices will be in short range (e.g., within several feet, with the actual value being dependent upon the mounting location of the UWB antennas). This may allow the PTCS-2 based carborne unit to determine that they are installed on inner cars. In some instances, range results corresponding to anchors may be geometrically compared using the anchor database to determine if the range responses are consistent with a single location along the track (including an acceptable, predefined tolerance). Accordingly, if the range results are consistent for a single location, the train controller's system location state changes from unknown to known. Otherwise, the train control system continues to attempt to find a location solution.

In an example implementation, PTCS-2 systems may be configured for supporting train control initialization: consist length and configuration. For example, once a train controller (e.g., PTCS-2 based carborne unit) determined its location using UWB range measurements to wayside anchors, each cab queries its companion unit cab for its location or the car number of its provisionally identified inner cab. Responses which return inner cab responses result in additional queries to the companion unit cab for its location. When all responses include confirmed locations or inner cab identifications, the geometry of the data is analyzed to determine the provisional consist length. This provisional length becomes an established value when movement is detected (e.g., by changes in location reporting by UWB ranging). If locations have changed and the measured length of the consist is consistent (e.g., cars that appeared to be coupled remain in the same proximity with movement of the train), the train length and car number configuration is established and reported by the respective end cabs. This configuration is periodically verified.

In an example implementation, PTCS-2 systems may be configured for supporting broken consist detection related functions. For example, train controllers (e.g., PTCS-2 based carborne unit) may periodically confirm the integrity of the consist. End cabs query the other end cab in the train consist (e.g., using the wireless data communication system along the wayside) and confirm the reported location is consistent with the expected train length. Inner cabs range to the opposite unit and confirm that the distance is consistent with the expected (short) separation. If a parted consist is detected, each train controller reports its status and position over the DCS.

FIGS. **6**A-**6**C illustrate various example performance assessments of ultra-wideband (UWB) communication within an existing transit system, used in a train control system, in accordance with the present disclosure.

As noted above, one of the components (and functions related thereto) in the PTCS-2 based system is UWB precision range measurement radio. Further, UWB radios may be configured for use in data transfers. However, the disclosure is not so limited, and in some instances, other technologies may be used for handling data transfer functions (at least for transferring large amount of data), using other (non-UWB) radios for those functions, with the UWB radios/components being used exclusively for ranging and the minimal data transmissions necessary to support ranging operations. Notwithstanding, as the charts shown in FIGS. **6**A-**6**C illustrate, corresponding to RF surveys performed in intended deployment locations, both above and below ground, enhanced performance may be achieved with PTCS-2 based systems, to confirm that PTCS-2 based solutions may be suitable for the intended applications in transit systems. For example, as illustrated in chart **610** in FIG. **6**A, consistent ranges out to about 600 meters or approximately 2,000 feet may be achieved, as shown in the UWB range chart **610**.

Further, where UWB is used for communication of data, different message structures may be used, as illustrated in charts **620** and **630** in FIG. **6**B. In this regard, charts **620** and **630** illustrates tests of different message structures to evaluate the difference in the signal to noise ratio between decreased or "short coded" messages and increased message loads or "long code" messages. In this regard, very little difference is detected between the two which allows for improving data back haul performance. Nonetheless, as noted above, non-UWB components may typically be used for data transfer/data backhaul.

Charts **640** and **650** shown in FIG. **6**C illustrate that effects of ambient conditions may be minimal with use of UWB communications. For example, performance may be assessed based on RF ambient environment, including inside and outside of tunnels as illustrated in charts **640** and **650**. In this regard, as shown in the chats, the tunnel environment has less RF noise present than the control environment

(ambient or control noise outside of tunnel), and at the frequencies used for UWB, there was no destructive interference present.

FIG. **7** illustrates various example anchor positions when deploying, within an existing transit system, a train control system, in accordance with the present disclosure.

In this regard, as shown in FIG. **7**, with respect to anchor position, experiments have been made in determining optimum anchor height and distance from tunnel structures such as metal and concrete columns. Optimal installation positions may be determined at various locations in transit systems. For example, optimal installation position may be determined at each location based on testing, such as based on ranging and signal-to-noise (S/N) analysis testing.

The proposed systems and/or solutions offer many key benefits. For example, with respect to performance, train spacing may be reduced by eliminating traditional fixed blocks and replacing them with anchor based moving blocks, where the length of the blocks dynamically changed based upon operating speed and conditions. Spacing may be adjusted based upon factors such as loading, schedules and may be optimized by the inclusion of support for future needs (e.g., AI linkage).

Also, additional safety measures such as the use of UWB for collision avoidance also offer redundant methods for determining train spacing such that additional safety factors such as empty blocks required in fixed block train control systems may be eliminated.

In some implementations, redundant integrated sensing technologies may be used to further enhance safety. Such redundant integrated sensing technologies may be combined through "sensor fusion" to allow for protection for trains, passengers, and workers. Thus, at any point in operation, several parallel systems are in operation, as shown in FIG. **8**, which illustrates use of redundant integrated sensing technologies in a train control system, in accordance with the present disclosure.

In addition to safety, this redundant operation also allows for simpler integration into our safety case, as having multiple, basic, redundant systems in place simultaneously, allows for a lower cost and higher performing system with improved availability as a failure of one aspect of the system is covered by another.

Another key benefit is the full integration of worker protection systems, with both the workers and train operator receiving warnings. The on-board equipment may also be programmed to enable an auto-braking event in the event that speed and or distance to worker rules are violated.

Another key benefit is reliability: Key sub-systems utilize duplicate components which operate on 50% alternating duty cycles which improves system availability without adversely affecting the safety case due to a multiple system approach.

Another key benefit is compatibility: The modular components and rack approach in the train-borne (or carborne) equipment allows for local customization of hardware and software for seamless system integration without comprising or adversely affecting overall system operation. Wayside components are also designed for full integration with existing assets, using a similar approach.

Another key benefit is cost: installation cost may be reduced drastically, as existing wayside assets may be left in place, the train to wayside communication is wireless, and the train-borne (or carborne) components are compact such that they may be installed into existing areas, located near the interfaced components on the train, without requirements for additional power.

The Train-centric approach also may eliminate the cost of a back-office control hub, although it is designed such that a cloud-based link may be opened anyplace with an internet connection.

Another key benefit is installation advantages: time required for installation is drastically reduced in that the system may be installed in an accretive manner with assets being activated as they are installed. The entire system operates on separate wayside anchors, requiring only a power supply connection (and, optionally, a fiber optic data connection) which lends itself to shorter installation times, with minimal service interruptions.

The anchor approach also reduces maintenance effort and costs. Conventional CBTC systems use track-mounted transducers for train positioning detection. Mounting assets such as these on the track structure complicates periodically required track maintenance, such as "tamping" (realigning the track), railroad tie replacement, and rail replacement. Additional care and maintenance procedural steps are necessary when the transducers exist on the track. For example, transducers may be removed for maintenance, and then not reinstalled in the exact same location, potentially adding significant error and uncertainty to the determination of train position. An additional complication is that temperature changes and vibration result in movement of the track-mounted transducers, adding additional error to positioning.

Many transit systems operate trains at least 20 hours a day, such that time for service activities is very limited on the wayside, especially when installing new equipment. To this end, all wayside devices are designed to be customized such that existing mounting brackets, wiring and other interfaces are developed such that they arrive on the site ready to install with as many operations such as wire harnesses provided as sub-assembly, ready for installation.

The PTCS-2 based systems may be configured to respond in a fail-safe manner to all known failure modes of its components. In this regard, the response(s) may be implemented using the industry best practice. For example, the PTCS-2 based systems may be configured to support safety related functions that conform to such industry references as MIL-STD-882C, IEEE 1483-2000, and American Railway Engineering and Maintenance-of-Way Association (AREMA) Signal and Communications Manual Part 17. Safety related functions in PTCS-2 based systems may also be adapted for compliance with international standards, such as European Committee for Electrotechnical Standardization/International Electrotechnical Commission (CENELEC/IEC). Configuring the safety related functions may be done based on qualitative and quantitative safety assurance analyses.

FIG. **9** illustrates an example safety program flow chart for creating safety profiles (cases) for use during operation of a train control system, in accordance with the present disclosure. Shown in FIG. **9** is flow chart **900**, representing an example process for creating safety cases (profiles), which may be implemented by PTCS-2 based systems—e.g., by designing and/or configuring various components of such systems, such as the PTCS-2 based carborne units and/or the PTCS-2 based anchors.

In this regard, creating the safety cases may comprise defining and/or setting data and/or actions for monitoring and handling safety (hazard) conditions. As shown in FIG. **9**, this may be done by performing preliminary hazard analysis (PHA) **910** and generating functional fault tree (FFT) **912**, such as based on assessment of system specification **902**, known rail system hazards **904**, and safety program plan for PTCS-2 **906**. This may allow performing

system hazard analysis (SHA) **930**, and correspondingly, operating and support hazard analysis (O&SHA) **934** and subsystem hazard analysis (SSHA) **934**. Also, hazard logging **936** may be performed. Further, the subsystem hazard analysis (SSHA) **934** may allow for performing failure modes and effects analysis (FMEA) **938**. The process may further comprise performing, based on subsystem hardware/software (HW/SW) detailed design **920**, a platform analysis **924**, and generating subsystem safety assurance concepts (SAC) **922**. The PTCS safety case(s) may then be generated **940**.

FIG. **10** illustrates example message and information exchange flow chart in a transit systems that utilizes PTCS-2 based components, in accordance with the present disclosure. Shown in FIG. **10** is chart **1000**, illustrating message and information exchange in a rail systems configured for utilizing PTCS-2 based components and/or functions.

In an example use scenario illustrated in chart **1000**, dispatcher route input **1002** may be provide the ATS system **1004**, which may also obtain vital information from the solid-state interlocking controller (SSIC) **1008**. The SSIC **1008** may obtain information from axle counter via axle counter interface **1018**.

The ATS system **1004** may generate an ATS movement request **1006**, which may be provided to the Interface Server **1010**, which may in turn provide it to the carborne unit **1012**. The Interface Server **1010** may also communicate back with the ATS system **1004**, such as to provide information obtained from the carborne unit **1012** (e.g., regarding handling of the ATS movement request **1006**).

The carborne unit **1012** may request and obtain vital information, such as from the wayside message interface (WMI) **1014** and/or from other carborne unit(s) in other train(s) ahead **1016**. The carborne unit **1012** may then use any information pertinent to functions performed thereby (particularly based on the route provided by the dispatcher), by applying vital processing **1020** of the obtained information, from all sources.

In various implementations, PTCS-2 systems may be configured to provide various functions within the train and/or within the transit system as a whole. Some of these functions may be "enforcement" functions—that is, functions related directly to enforcement for vital train protection, while other functions may not be enforcement functions—i.e., not directly related to enforcement for vital train protection. Nonetheless, some of these non-enforcement functions may be relevant to and/or be used during enforcement scenarios. For example, while the location determination function (described below) may not be a train control enforcement function per se, it may be vital to and may be used in support of such enforcement functions as speed enforcement, train separation, temporary speed restrictions, etc.

In an example implementation, PTCS-2 systems may be configured for supporting location determination related functions. In this regard, a PTCS-2 equipped train may be configured (e.g., via its PTCS-2 based carborne unit) to continuously tracks the train's location (e.g., based on the location of the PTCS-2 based carborne unit, which correlates to the train's location) within its operating territory (e.g., within the transit system). Use of such function may enable the train to localize its vital location while in motion or while stopped. Location in the operating territory for vital train control functionality may require determination of location along the track, identification of the specific track occupied by the train, and the direction of the train. Absence of any of these may prevent the ability of a PTCS-2 equipped train to localize. Likewise, loss of any of these following localizations will result in the PTCS-2 equipped train losing location and degrading to a reduced mode of operation.

In an example implementation, PTCS-2 systems may be configured for supporting determination of location along the track related functions. In this regard, PTCS-2 equipped train may be configured (e.g., via its PTCS-2 based carborne unit) to determine the train's location along the track using such mechanisms as UWB ranging against one or more fixed wayside devices and/or legacy track-mounted axle counters. For example, the PTCS-2 based carborne unit may be configured to use UWB ranging as the primary method of determining the train's location along the track. It is noted here that "legacy" as used herein and in other parts of the disclosure with respect to the axle counters refers to the fact that these devices are already used for train control, and not that they are legacy in that they already physically exist or are deployed in the transit systems—i.e., these axle counters may be installed as part of the deployment of the PTCS-2 system, to provide support to various functions of the system as auxiliary wayside devices (e.g., providing supplemental train control information, as well as a backup in the event of an UWB train control failure).

The track database, which is stored on the PTCS-2 based carborne unit, includes the locations of fixed ranging devices—e.g., railway signals and wayside devices (or anchors). By ranging against these fixed devices, the PTCS-2 based carborne unit may accurately determine the train's distance from the wayside device and location on the track map. Alternatively, if UWB ranging is unavailable, the PTCS-2 based carborne unit may use legacy infrastructure, such as legacy axle counters, to acquire degraded location on the track map. In some instances, however, the axle counters may be added with and/or included into the PTCS-2 system for the express purpose of providing an auxiliary wayside system (e.g., as back-up system).

In an example implementation, PTCS-2 systems may be configured for supporting identification of track related functions. This is shown in FIG. **11**, which illustrates example use scenario for utilizing PTCS-2 based system for track identification, in accordance with the present disclosure. Shown in FIG. **11** is train **1110**, which incorporates PTCS-2 based carborne unit **1120** for operating within a PTCS-2 based transit system, which may incorporate wayside units or anchors **1130**.

In this regard, in instance where the train **1110** is in a single track territory, then determination of location along the track may be enough to vitally determine location. However, if the train **1110** is in an area with two or more tracks, track identification may need to be determined to establish the train location. In such instances, the PTCS-2 based carborne unit **1120** may be configured to use various mechanisms for identifying the specific track occupied by the train **1110**, such as using one or more of: 1) UWB ranging against multiple (e.g., three or more) fixed wayside units **1130**—that is, trilateration as shown in FIG. **11**; 2) traversal of a track-mounted legacy axle counters **1140**, as shown in FIG. **11**; 3) traversal of a converging switch (to single track; and 4) using a single anchor, in some situations and/or under certain conditions, as mentioned above—e.g., when a train slowly passes by a close anchor, thus achieving a minimum distance measurement which can only be achieved by a train operating on the track associated with that anchor (e.g., as determined using an available track database (map)).

For example, if the PTCS-2 based carborne unit **1120** is in range of three or more fixed ranging devices (wayside units **1130**), the PTCS-2 based carborne unit **1120** may use trilateration based measurement and calculations to determine the position with enough accuracy to vitally identify the current track. However, where trilateration is not possible—e.g., if the number or quality of fixed ranging devices doesn't permit trilateration, track identification may be determined by other means, such as based on detection of a wayside UWB anchor (when passing it), traversing a fixed and valid legacy axle counter **1140**, and/or by traversing a converging switch when the converging leg is the beginning of single track. Relatedly, the PTCS-2 based carborne units may be configured to perform direction determination functions. For example, as shown in FIG. **11**, the PTCS-2 based carborne unit **1120** uses UWB ranging against one or more fixed wayside units to determine the direction of the train **1110**. Direction determination requires movement of the train **1110**. If one or more wayside ranging devices are available, the PTCS-2 based carborne unit **1120** may use changes in range measurements during train movement to determine the train direction.

In an example implementation, PTCS-2 systems may be configured for supporting establishing and maintaining train location with protection envelope related functions. This is shown in FIGS. **12**A and **12**B, which illustrates example use scenarios for utilizing a PTCS-2 based system for establishing and maintaining train location with protection envelope, in accordance with the present disclosure. Shown in FIG. **12** is train **1210**, which incorporates PTCS-2 based carborne unit **1220** for operating within a PTCS-2 based transit system.

In this regard, the PTCS-2 based carborne unit **1220** may be configured to maintain train location related information, comprising both a "perceived actual location" and a "worst-case forward location." For the perceived actual location, the PTCS-2 based carborne unit **1220** may determine the perceived actual location based on processing of all available location inputs, to determine the most likely train location at a given point in time. Example location inputs to the location processing algorithms may include: UWB ranging against one or more fixed wayside devices, legacy axle counters, GPS signals, etc. The worst-case forward location may be a range ahead of the perceived actual location, determined to create a virtual protection envelope, as shown in FIG. **12**A. In this regard, enforcement functions of the train control system may be configured and/or applied based on the protection envelope—i.e., the worst-case forward location.

The distance between the perceived actual location and worst-case forward location may be a function of a default safety buffer, the number and quality of location inputs available at any point in time, and the current speed of the train. In other words, the worst case forward location, and thus the protection envelope, may be determined based on measurement and/or calculations that account for messaging related delays, movement of train, and other possible errors in the system (e.g., measurement errors). Thus, as the train speed increases or location inputs degrade (e.g. loss of UWB ranging) the protection envelope grows; whereas, when location inputs are recovered (e.g. UWB ranging) or the train traversal of a known fixed point, the protection envelope retracts.

In some instances, a configurable limit may be applied to the size of the protection envelope. If the protection envelope exceeds this limit the PTCS-2 based carborne unit **1220** considers this loss of train location and downgrades to a reduced mode of operation until the location can be reestablished.

The determination of the protection envelope may also be configured to account for changes in the train's route, such as based on determined switch positions as illustrated in FIG. **12**B. Thus, if the protection envelope traverses a diverging switch in an unknown position the track identification is lost. The PTCS-2 based carborne unit **1220** considers this loss of train location and downgrades to a reduced mode of operation until location can be reestablished.

In an example implementation, PTCS-2 systems may be configured for supporting speed determination related functions. This is shown in FIG. **13**, which illustrates example use scenarios for utilizing PTCS-2 based system for speed determination, in accordance with the present disclosure. Shown in FIG. **13** is train **1310**, which incorporates PTCS-2 based carborne units **1320** for operating within a PTCS-2 based transit system, which may incorporate wayside units or anchors **1330**. In this regard, the PTCS-2 based carborne units **1320** may be configured to use UWB ranging against one or more fixed wayside devices to determine the train speed. For example, in order to use UWB ranging for speed determination, the PTCS-2 based carborne units **1320** may need executed multiple range measurements to two or more fixed wayside devices and effectively calculated the train speed as distance traveled over time.

In the example use scenario shown in FIG. **13**, each of the two PTCS-2 based carborne units **1320**, which are located at the two ends of the trains, may determine respective ranges (shown as range **1** and range **2**) to corresponding wayside anchors **1330** from the two ends of the train. The train speed may be calculated for each fixed wayside device—e.g., by each of two PTCS-2 based carborne units **1320**, the based on changes in two ranges (range **1** and range **2**), and the train speed is determined as the maximum of the two speed measurements. To guard against speed determination errors, variance between the two speed measurements exceeds a predefined threshold then speed determination is considered lost and the system downgraded to a reduced mode of operation. The threshold of variability between measured speeds may be configurable.

In an example implementation, PTCS-2 systems may be configured for supporting brake control related functions. In this regard, a PTCS-2 equipped train may be configured (e.g., via its PTCS-2 based carborne unit) for controlling train brakes, such as a means of providing enforcement in support of train protection and safety. Various mechanisms may be used for implementing such brake control. For example, the PTCS-2 based carborne unit may be configured to use an optional non-vital serial interface to the integrated brake system in the train. Using a non-vital serial interface, the PTCS-2 based carborne unit may send commands for various levels of braking, including full service brake. Alternatively or additionally, the PTCS-2 based carborne unit may be configured to use a mandatory vital discrete output, which may be used for vital application of full service or emergency brake. This may be done to provide more severe brake rate in the event the non-vital application may not achieve the required rate of deceleration.

In an example implementation, PTCS-2 systems may be configured for supporting train tracking related functions. In this regard, PTCS-2 equipped train may be configured (e.g., via its PTCS-2 based carborne unit) to periodically broadcast the current location of the train, as the train traverses within its operating territory, to nearby wayside devices (e.g., via the Data Communication System (DCS) network).

The wayside devices may in turn communicate the current train location, such as via the Wayside Message Interface (WMI), over a dedicated network (e.g., fiber network). In this regard, the WMI may maintain real-time tracking of all PTCS-2 equipped trains. In a large territory requiring more than one WMI, each WMI may be responsible for maintaining train tracking within its respective zone, and to coordinate handover of trains transitioning between zones with the adjacent WMI.

In some instances, the data transmission between the PTCS-2 equipped trains and the wayside devices, as well as between the wayside devices and the WMI incorporate defenses to ensure message authenticity, integrity, timeliness, freshness, and sequence.

If loss of communication occurs while a train is traversing the track, the WMI may lose the ability to vitally track that train's location. Thus, when this occurs, responsibility for tracking of the train may be handed over to a series of underlying legacy axle counters. Further, protection against an unequipped or malfunctioning PTCS-2 equipped train may commence exclusively using fixed block principals in accordance with the blocks established by the legacy axle counter.

In an example implementation, PTCS-2 systems may be configured for supporting target tracking related functions. In this regard, the PTCS-2 based carborne unit of a PTCS-2 equipped train may be configured to maintain a list of targets in the train's path as the PTCS-2 equipped train traverses the operating territory, with relevant data for each target. Items that may constitute "targets" include, but are not limited to, anchors (or wayside devices in general), signals, switches, station platforms, other PTCS-2 equipped trains, speed restriction boundaries, work zone boundaries, end of track bumpers, and territory boundaries. In this regard, with decentralized control each PTCS-2 equipped train may maintain the updated location of a train or trains in its "visibility zone"—that is, within the necessary distance ahead to ensure safety in worst case conditions, such that each train may calculate the maximum distance and track path it can travel safely. Such movement authority limit (MAL) may be shared with other trains as they continuously inquire to ensure that the MALs don't overlap and create an unsafe condition.

Each of the targets in the list may be associated with attributes to identify important information such as target type, location, health, operating status, etc. Targets that are permanent fixtures (e.g. anchors, signals, switches, etc.) may be acquired by the PTCS-2 equipped train from a track database. Volatile targets (e.g. other PTCS-2 equipped trains, Work Zone boundaries, etc.) may be acquired via data communication with the targets, directly and/or indirectly (e.g., via the WMI). Targets with volatile attributes that contribute to operational safety (e.g. switch position, signal status, other PTCS-2 equipped train location or direction) may be set such that they may require periodic updates to ensure freshness. In this regard, updates may be acquired via data communication.

A PTCS-2 equipped train may be configured to treat targets with expired attributes in the most restrictive state applicable to that target type. The data transmission between the PTCS-2 equipped trains and the wayside anchors may incorporate defense measures to ensure message authenticity, integrity, timeliness, freshness, and sequence. Detected failures may result in treating the respective target in the most restrictive state applicable to that target type.

In an example implementation, PTCS-2 systems may be configured for supporting speed enforcement related functions. In this regard, a PTCS-2 equipped train may be configured (e.g., via its PTCS-2 based carborne unit) for determining and/or enforcing applicable speed limits. For example, there may be three primary types of speed limits enforceable by the PTCS-2 based carborne unit: 1) civil speed limits; 2) temporary speed restrictions; and 3) restrictive speed limits associated with degraded modes of operation. Civil speed limits may be captured in a track database (associated with a particular track). Temporary speed restrictions may not part of the track database, but rather are communicated to a PTCS-2 equipped train—e.g., from the WMI. When a PTCS-2 equipped train is operating in a degraded mode of operations (e.g. pre-initialized, loss of location, en route failure), a configurable restrictive speed, may be allocated to degraded mode.

In some instances, the PTCS-2 based carborne unit may maintain a list of all speed limits applicable to the determined location and may enforce the most restrictive of those. While enforcement of the most restrictive speed is a vital function, determination of the most restrictive speed may not be. This is also true for temporary speed restrictions and operation in degraded modes. In an example use scenario, acquisition of temporary speed limits may be initiated by the dispatcher entering information into the ATS system. The ATS may then send the speed restriction message to the WMI. The WMI may send a vital message to all trains and the carborne system applies vital logic to implement the restriction. When operating in a degraded mode, enforcement of the associated speed limit is a vital function, depending on the reason for being in a degraded mode it is possible for there to be a more restrictive speed limit that the PTCS-2 based carborne unit is unable to acquire.

The PTCS-2 based carborne unit may enforce the most restrictive speed limit it has for the determined train location. Speed enforcement may be configured for using configurable overspeed allowance, prior to automatic enforcement. Thus, if the determined train speed exceeds the speed limit, but not the overspeed allowance, the PTCS-2 based carborne unit may provide an indication (e.g., audible and visual warning) to the train operator of pending enforcement. This provides the train operator with the opportunity to comply before automatic enforcement is executed after a configurable time delay. If the determined train speed exceeds the configurable overspeed allowance the PTCS-2 based carborne unit automatically enforces by brake application.

Enforcement application may occur by vital application of full service or emergency braking, or alternatively may be configured to apply the full service braking or a less severe rate of braking using non-vital means. The PTCS-2 based carborne unit may be configured to, when using the non-vital means of enforcement, monitor the deceleration rate and apply vital enforcement if the desired configurable deceleration rate is not met. The PTCS-2 based carborne unit may be configured to release enforcement brakes once the determined train speed complies with the determined speed limit (or slower by a configurable margin), or to hold the enforcement brakes until the train has come to a complete stop.

In an example implementation, PTCS-2 systems may be configured for supporting signal enforcement related functions. In this regard, PTCS-2 equipped train may be configured (e.g., via its PTCS-2 based carborne unit) for enforcing signals, such as based on a list of signals in the train's path, which may be maintained by the PTCS-2 based carborne unit. For example, as a PTCS-2 equipped train traverses the operating territory, when the train approaches signals (e.g., indicated in the list), the PTCS-2 based carborne unit may

establish wireless communication with each signal and/or wayside devices at or near the signals, such as to acquire the signal's current status and other information. In some instances, the data transmission between the PTCS-2 equipped trains and the signals (and/or wayside devices at or near the signals) may incorporate defenses to ensure message authenticity, integrity, timeliness, freshness, and sequence. The PTCS-2 based carborne unit may also use UWB ranging (e.g., the signal) to determine the distance from the train to the signal.

In some instances, with signals at interlocks, the signal state and interlock state may be monitored by the solid-state interlocking controller (SSIC) and associated legacy axle counters. When a train is approaching an interlock, it may receive vital information from the solid-state interlocking controller, such as via the WMI, as well as directly from the UWB equipped signal. Various handling criteria may be used in conjunction with signal enforcement. For example, an unhealthy or non-communicating signal, or one for which the status age exceeds a configurable threshold is treated as a stop signal. A signal for which the inconsistency between the signal's location determined via UWB ranging and the expected signal's location as calculated based on the determined train location and the signal location captured in the track database exceeds a predefined threshold is treated as a stop signal.

In an example use scenario, as a PTCS-2 equipped train approaches a signal it uses pertinent information (e.g., the train's determined location, train's speed, location and status of the signal, and applicable braking curve) to determine the point at which enforcement must occur in order to comply with the signal. The PTCS-2 based carborne unit may provide corresponding output to the operator—e.g., displaying a countdown of time remaining for the operator to reduce speed to comply with the signal. When the countdown reaches a configurable threshold, the system may provide an indication (e.g., audible and visual warning) to the train operator of pending enforcement. If the train is not in compliance before reaching the enforcement point, the PTCS-2 based carborne unit automatically enforces signal compliance, such as by brake application. Enforcement application may occur by vital application of full service or emergency braking, or alternatively, may be configured to apply the full service brake or a less severe rate of braking using non-vital means. If using the non-vital means of enforcement, the PTCS-2 based carborne unit will monitor the deceleration rate and apply vital enforcement if the desired configurable declaration rate is not met.

In an example implementation, PTCS-2 systems may be configured for supporting enforcement of train separation related functions. For example, as a PTCS-2 equipped train traverses the operating territory it maintains a list of other PTCS-2 equipped trains in its path and various attributes about the other train(s) (e.g. location, direction, speed & the freshness of this data). As a train enters a section of track, the train may obtain (e.g., via the WMI) identification information (e.g., Train ID) of trains ahead. As the train approaches other PTCS-2 equipped trains in its path, it establishes wireless communication with the other trains, to acquire the pertinent information associated therewith (e.g., train's location, speed, direction, and status), as determined by the other train). In this regard, "status" may include train consist length, and "location" may include the location of the front and rear of the train, so that the entire extent of the track occupied by the train is known. The PTCS-2 equipped train may determine the train ahead, and may monitor that train's location to ensure safe separation. The data transmissions between the PTCS-2 equipped trains may incorporate defenses to ensure message authenticity, integrity, timeliness, freshness, and sequence.

In some instances, the PTCS-2 equipped train may be configured to take various measures in identifying and handling conditions affecting train safety. For example, an unhealthy or non-communicating train, or one for which the age of data exceeds a configurable threshold is treated as a failed train. In the event of a failed train, separation is maintained in accordance with fixed blocks, as established by underlying legacy axle counter track circuits, or by enforcing a stop for the current PTCS-2 equipped train until the location of trains in its path can be assured.

In some instances, the PTCS-2 equipped train uses its own direction, location, and speed with the known data about other PTCS-2 equipped trains in its path to calculate separation distance and closing speed. This information with the applicable braking curve for the train is used to determine the point at which automatic enforcement is required to safely maintain desired train separation. Much like with signal enforcement, the PTCS-2 based carborne unit displays to the operator a countdown of time remaining for the operator to reduce speed to comply with the train separation requirements before the system will apply automatic enforcement. When the countdown reaches a configurable threshold, the system provides audible and visual warning to the train operator of pending enforcement. This provides the train operator with the opportunity to comply before enforcement or at least prepare the train for enforcement if enforcement is unavoidable. If the train is not in compliance before reaching the enforcement point the PTCS-2 based carborne unit will automatically enforce by brake application.

Enforcement application may occur by vital application of full service or emergency braking, or alternatively may be configured to apply the full service brake or a less severe rate of braking using non-vital means. If using the non-vital means of enforcement, the PTCS-2 based carborne unit will monitor the deceleration rate and apply vital enforcement if the desired configurable declaration rate is not met.

In an example implementation, PTCS-2 systems may be configured for supporting work zone protection related functions. In this regard, various rail related systems (e.g., ATS systems) may incorporate work zone protection, and PTCS-2 equipped train may be configured (e.g., via its PTCS-2 based carborne unit) for supporting such work zone protection. In an example use scenario, a dispatcher enters the work zone information. The ATS system generates a message (e.g., on an Interface Server) that is then sent to the WMI. The message may comprise such information as location related information (e.g., start and end) and timing related information (e.g., start and end times) of the work zone. The WMI sends the message to all trains. Each train, using UWB location information, may determine (e.g., by applying vital logic) if the message applies to that particular train. If the message does not apply the carborne system will continue to test message application until the work zone time expires. A separate message can be initiated by the dispatcher to end a work zone restriction immediately.

In an example implementation, PTCS-2 systems may be configured for supporting topographical track map (database) related functions. In this regard, PTCS-2 equipped train may be configured (e.g., via its PTCS-2 based carborne unit) for generating, maintaining, and/or updating track map (database), which may be used for other functions. The track database may comprise a map (e.g., topographical data) for the operating territory, including but not limited to: anchor

locations, civil speed limits, switch location, signal locations, relative track grade, station platform locations, and end-of-track bumper locations. The track database may (or may not) include dynamic data, such as temporary speed restrictions, ranging results, train speed, etc. The track database may be loaded directly onto the PTCS-2 based carborne unit, such as by maintenance personnel (e.g., using PE **180**, as shown in FIG. **1**), or may be wirelessly loaded from a train control server (e.g., as part of departure test). The track database may comprise several files. For added security and reliability, each file may include error detection and protection measures (e.g., cyclic redundancy check (CRC)), to ensure that any corruption is detectable. In some instances, the track database as a whole may similarly include error detection and protection measures—e.g., a dedicated CRC file that provides collective protection for the track database in its entirety.

Other embodiments of the invention may provide a non-transitory computer readable medium and/or storage medium, and/or a non-transitory machine readable medium and/or storage medium, having stored thereon, a machine code and/or a computer program having at least one code section executable by a machine and/or a computer, thereby causing the machine and/or computer to perform the processes as described herein.

Accordingly, various embodiments in accordance with the present invention may be realized in hardware, software, or a combination of hardware and software. The present invention may be realized in a centralized fashion in at least one computing system, or in a distributed fashion where different elements are spread across several interconnected computing systems. Any kind of computing system or other apparatus adapted for carrying out the methods described herein is suited. A typical combination of hardware and software may be a general-purpose computing system with a program or other code that, when being loaded and executed, controls the computing system such that it carries out the methods described herein. Another typical implementation may comprise an application specific integrated circuit or chip.

Various embodiments in accordance with the present invention may also be embedded in a computer program product, which comprises all the features enabling the implementation of the methods described herein, and which when loaded in a computer system is able to carry out these methods. Computer program in the present context means any expression, in any language, code or notation, of a set of instructions intended to cause a system having an information processing capability to perform a particular function either directly or after either or both of the following: a) conversion to another language, code or notation; b) reproduction in a different material form.

While the present invention has been described with reference to certain embodiments, it will be understood by those skilled in the art that various changes may be made and equivalents may be substituted without departing from the scope of the present invention. In addition, many modifications may be made to adapt a particular situation or material to the teachings of the present invention without departing from its scope. Therefore, it is intended that the present invention not be limited to the particular embodiment disclosed, but that the present invention will include all embodiments falling within the scope of the appended claims.

What is claimed is:

1. A system for providing decentralized control operations in a railway network, the system comprises:

a plurality of wayside units, each configured for placement on or near tracks in the railway network; and

one or more train-mounted units, each configured for deployment on a train operating in the railway network;

wherein each train-mounted unit is configured to:

communicate with any wayside unit or other train-mounted unit that comes within communication range of the train-mounted unit, wherein the communicating comprises use of ultra-wideband (UWB) based signals; and

generate based on the communication, control information configured for use in controlling one or more functions of the train in conjunction with operation in the railway network,

wherein generating the control information comprises or is based on obtaining ranging measurements, and

wherein obtaining the ranging measurements comprises:

broadcasting ultra-wideband (UWB) based signals within a wireless range of the train-mounted unit, the UWB based signals comprising information identifying the train-mounted unit;

selecting based on received responses to the broadcast UWB based signals, one or more of the plurality of wayside units; and

determining ranging information corresponding to each of the one or more wayside units, based on ultra-wideband (UWB) based signals communicated respectively with each of the one or more of the plurality of wayside units.

2. The system of claim **1**, wherein the train-mounted unit is configured to generate at least part of the control information based on sources other than processing of the ultra-wideband (UWB) based signals.

3. The system of claim **2**, wherein the train-mounted unit is configured to:

assess based on the processing of the ultra-wideband (UWB) based signals, one or more conditions relating to operation of the train within the railway network;

when at least one condition meets one or more particular criteria, determine one or more responsive actions; and

perform or cause performing each of the one or more responsive actions.

4. The system of claim **3**, wherein, when the one or more responsive actions comprise providing indication or feedback, relating to the at least one condition, to a train operator, the train-mounted unit is configured to:

monitor actions of the train operator;

assess based on the monitoring, the train operator's compliance with at least one expected subsequent responsive action; and

when the train operator fails to do so, directly perform the at least one expected subsequent responsive action or perform an alternative action.

5. The system of claim **1**, wherein the train-mounted unit is configured for utilizing non-UWB based signals for communicating at least some data with the wayside unit and/or another train-mounted unit.

6. The system of claim **1**, wherein the train-mounted unit is configured for handling radio-frequency identification (RFID) based signals with RFID devices used within the railway network.

7. The system of claim **1**, wherein the train-mounted unit is configured for handling satellite based signals.

8. The system of claim **7**, wherein the train-mounted unit is configured for obtaining from received satellite based

signals information, and generating or adjusting the control information based on the obtained information.

9. The system of claim **1**, wherein the train-mounted unit is configured for connecting to and/or interfacing with other systems of the train.

10. The system of claim **1**, comprising one or more input/output (I/O) components, for receiving input from an operator of the train and/or for providing output to the operator of the train.

11. The system of claim **1**, comprising a power component for supplying and/or obtaining power for components of the train-mounted unit.

12. The system of claim **1**, wherein the train-mounted unit is configured for communicating, directly or via at least one of the wayside unit and another train-mounted unit, with one or more other components or devices in the railway network, the one or more other components or devices in the railway network not being part of decentralized train control system.

13. The system of claim **1**, wherein the train-mounted unit is configured to substantially continually determine absolute position of the train, based on the ranging information obtained from ranging with wayside units.

14. The system of claim **13**, wherein the train-mounted unit is configured to determine the absolute position of the train based on the ranging information and positioning information obtained without ranging to wayside units.

15. The system of claim **14**, wherein the train-mounted unit is configured to obtain at least portion of the positioning information from each wayside unit as the train passes the wayside unit.

16. The system of claim **15**, wherein the train-mounted unit is configured to obtain at least portion of the positioning information from at least one wayside unit as the train passes that wayside unit using non-UWB communications.

* * * * *

EXHIBIT B

US008812227B2

(12) **United States Patent**
Carlson et al.

(10) **Patent No.: US 8,812,227 B2**
(45) **Date of Patent: Aug. 19, 2014**

(54) **COLLISION AVOIDANCE SYSTEM FOR RAIL LINE VEHICLES**

(75) Inventors: **Richard C. Carlson**, Wauconda, IL (US); **Kurt A. Gunther**, Round Lake Heights, IL (US); **Marc W. Cygnus**, Mundelein, IL (US)

(73) Assignee: **Metrom Rail, LLC**, Lake Zurich, IL (US)

(*) Notice: Subject to any disclaimer, the term of this patent is extended or adjusted under 35 U.S.C. 154(b) by 0 days.

(21) Appl. No.: **13/474,428**

(22) Filed: **May 17, 2012**

(65) **Prior Publication Data**

US 2012/0296562 A1 Nov. 22, 2012

Related U.S. Application Data

(60) Provisional application No. 61/598,750, filed on Feb. 14, 2012, provisional application No. 61/627,697, filed on Oct. 17, 2011, provisional application No. 61/519,201, filed on May 19, 2011.

(51) **Int. Cl.**

G05D 1/02	(2006.01)
G06F 17/10	(2006.01)
G06G 7/78	(2006.01)
B61L 23/06	(2006.01)
B61L 15/00	(2006.01)
G08G 1/16	(2006.01)
B61L 25/02	(2006.01)
B61L 23/34	(2006.01)

(52) **U.S. Cl.**

CPC ***B61L 15/0027*** (2013.01); ***B61L 23/06*** (2013.01); *B61L 2205/04* (2013.01); ***G08G 1/166*** (2013.01); ***B61L 25/025*** (2013.01); ***G08G 1/161*** (2013.01); ***B61L 23/34*** (2013.01)

USPC **701/301**; 701/300

(58) **Field of Classification Search**

USPC 342/53, 115, 118, 125, 70; 340/905; 701/408, 301, 29.6, 34.3, 36, 19, 13, 701/23, 4, 117, 468, 409, 63, 28, 1, 116, 701/500, 2, 46

See application file for complete search history.

(56) **References Cited**

U.S. PATENT DOCUMENTS

5,904,210	A *	5/1999	Stump et al.	175/45
6,295,019	B1 *	9/2001	Richards et al.	342/125
6,473,028	B1 *	10/2002	Luc	342/118
6,674,396	B2 *	1/2004	Richards et al.	342/125

(Continued)

OTHER PUBLICATIONS

Time Domain's Ultra Wideband, (UWB), Definition and Advantages, 320-0294A, Mar. 2011, pp. 1-14, Huntsville, Alabama.

(Continued)

Primary Examiner — Thomas Black
Assistant Examiner — Robert Payne
(74) *Attorney, Agent, or Firm* — McAndrews, Held & Malloy, Ltd.

(57) **ABSTRACT**

A collision avoidance system (CAS) is described that includes one or more sensor technologies, including, for example, an Ultra Wideband (UWB) sensing technology. The collision avoidance system is designed to reliably track the location and speed of vehicles and the distance between vehicles over a wide variety of track and terrain. The collision avoidance system may utilize information from a variety of sensor technologies to determine whether one or more vehicles violate speed and/or separation criteria, and may generate a warning.

28 Claims, 15 Drawing Sheets

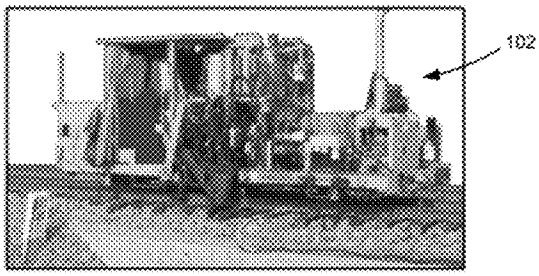

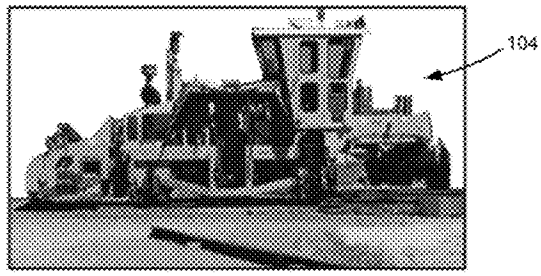

(56) **References Cited**

U.S. PATENT DOCUMENTS

6,917,284	B2	7/2005	Grisham et al.	
6,922,166	B2 *	7/2005	Richards et al.	342/125
7,089,099	B2 *	8/2006	Shostak et al.	701/29.6
7,148,791	B2	12/2006	Grisham et al.	
7,725,252	B2 *	5/2010	Heddebaut et al.	701/408
8,231,270	B2 *	7/2012	Groeneweg et al.	374/141
2003/0028323	A1 *	2/2003	Zeitler et al.	701/219
2006/0025897	A1	2/2006	Shostak	
2008/0150786	A1 *	6/2008	Breed	342/53
2010/0207787	A1 *	8/2010	Catten et al.	340/905
2010/0225527	A1 *	9/2010	Talty et al.	342/145
2013/0279392	A1 *	10/2013	Rubin et al.	370/312
2013/0279393	A1 *	10/2013	Rubin et al.	370/312
2013/0279491	A1 *	10/2013	Rubin et al.	370/347

OTHER PUBLICATIONS

International Search Report and Written Opinion of the International Searching Authority, International Application No. PT/US12/38332, International Filing Date May 17, 2012, METROM RAIL, dated Jul. 13, 2012.

PCT Notification Concerning Transmittal of Copy of International Preliminary Report on Patentability in International applciation No. PCT/US2012/038332, dated Nov. 28, 2013. (7 pages).

* cited by examiner

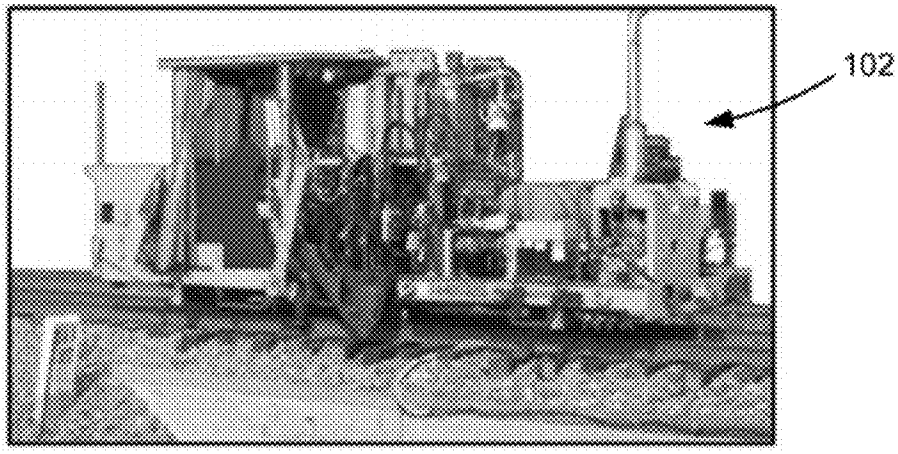

Fig. 1A

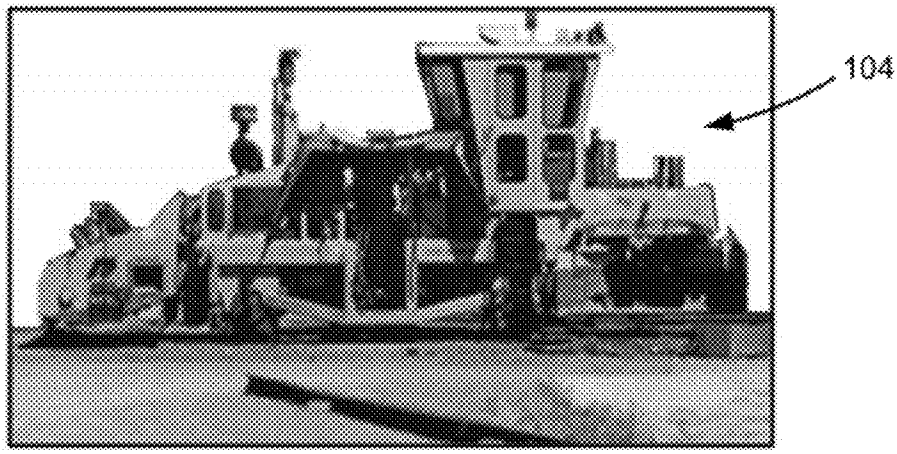

Fig. 1B

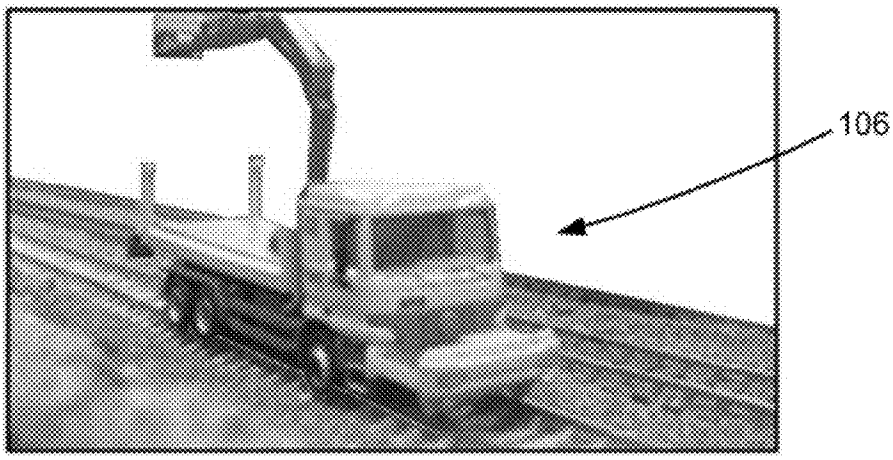

Fig. 1C

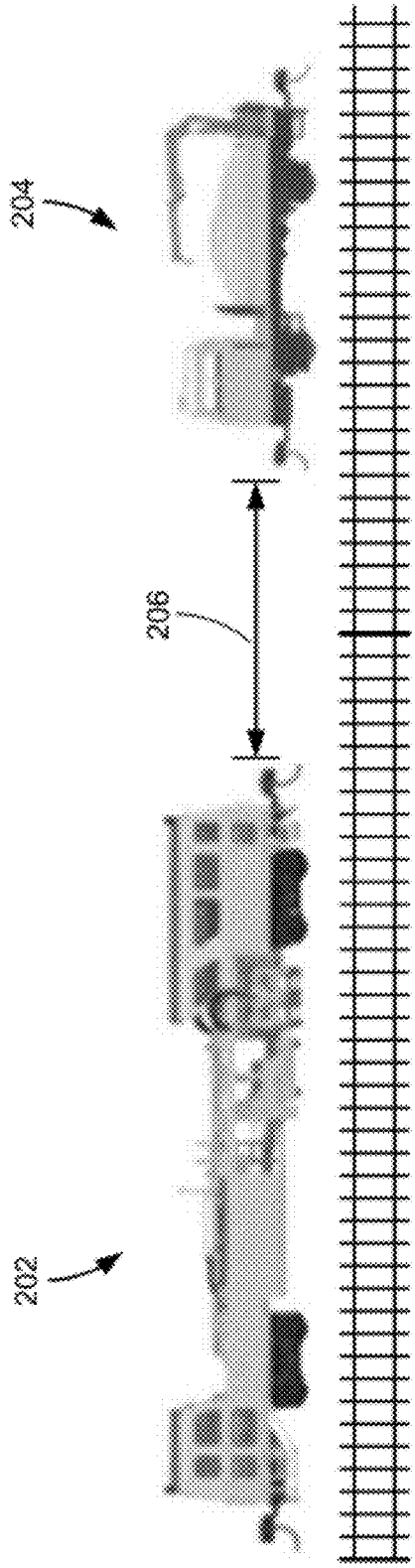

Fig. 2

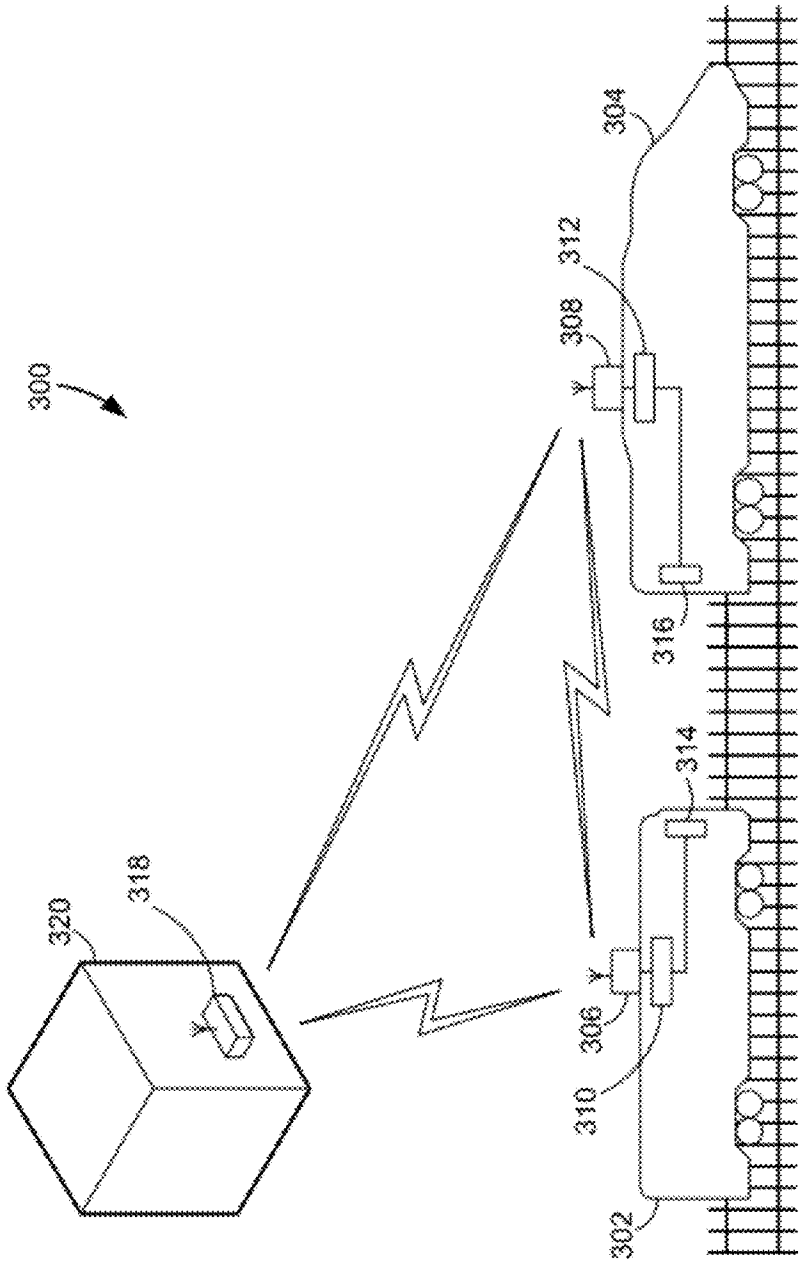

Fig. 3

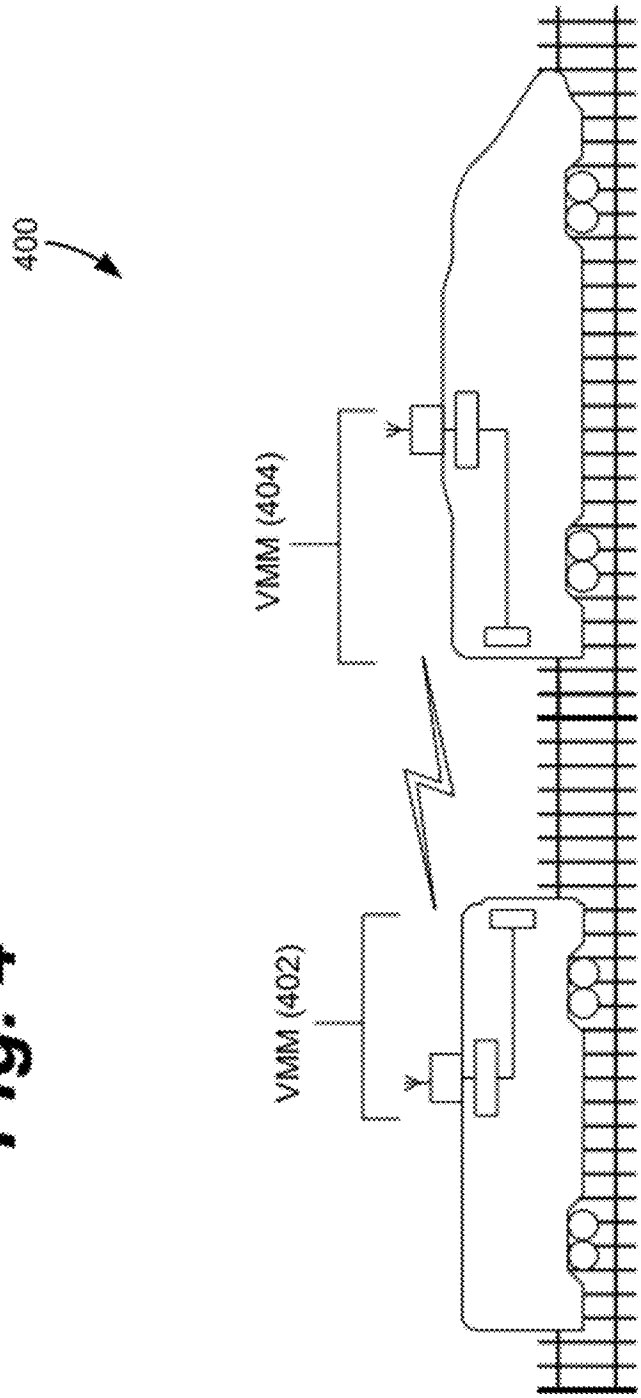

Fig. 4

Fig. 5

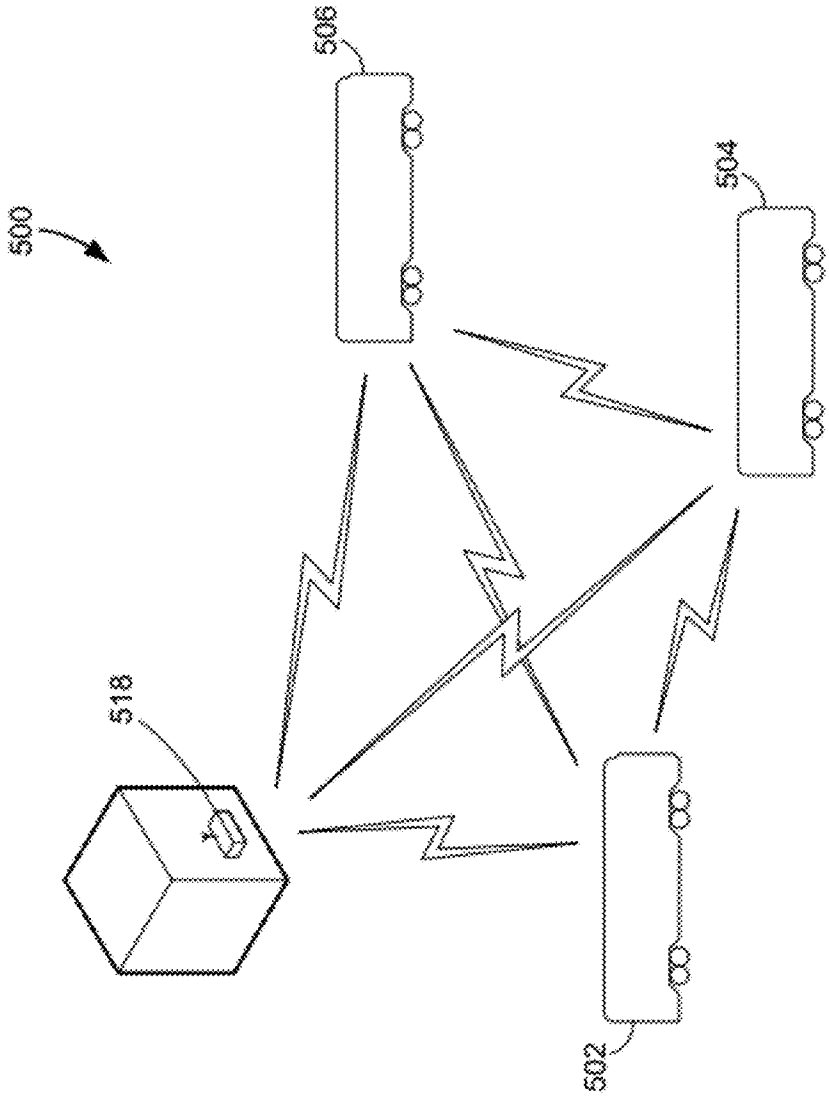

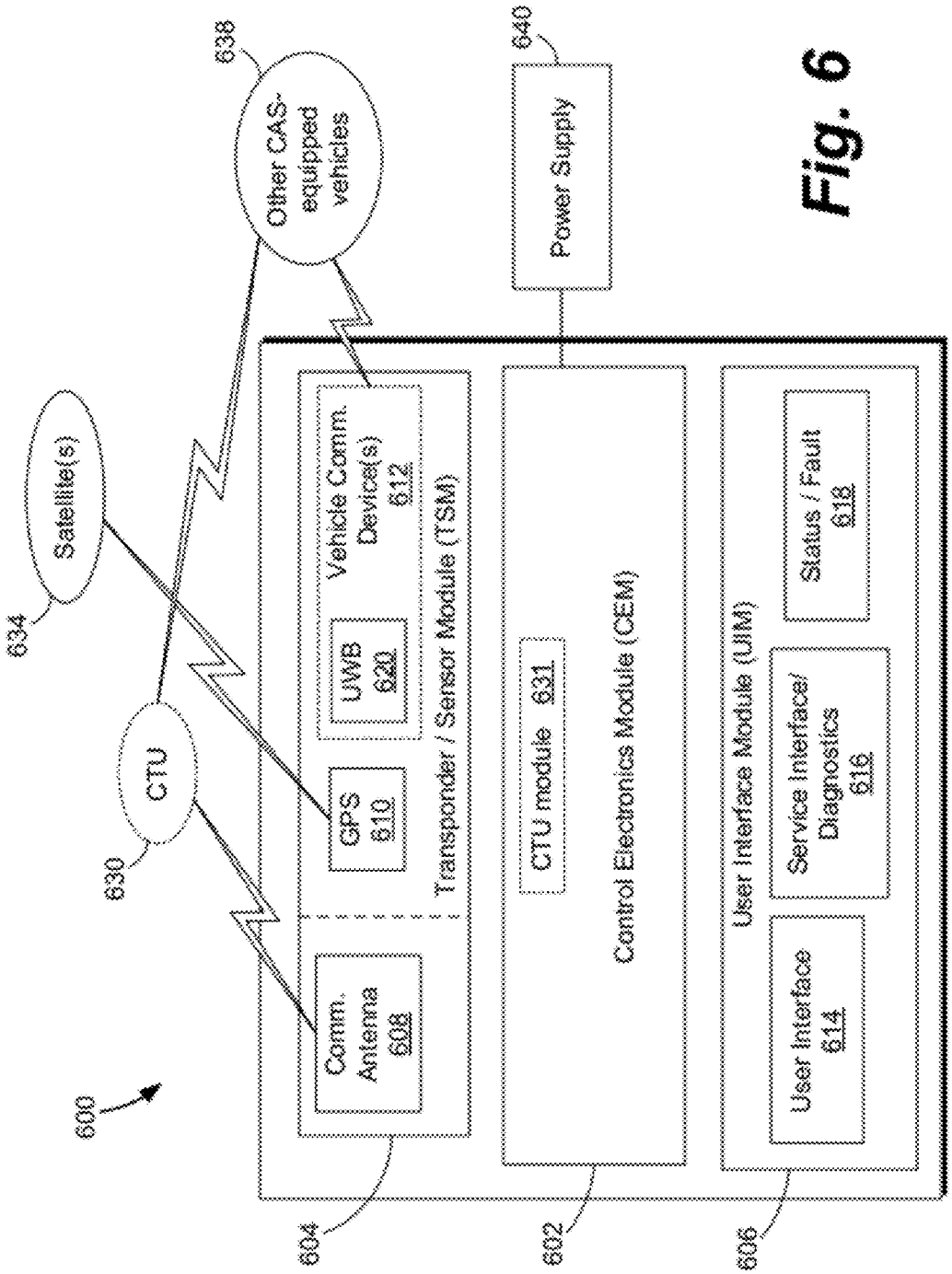
600
Satellite(s)
634
CTU
630
Other CAS-equipped vehicles
638
Power Supply
640
Comm. Antenna 608
GPS 610
UWB 620
Vehicle Comm. Device(s) 612
Transponder / Sensor Module (TSM)
604
CTU module 631
Control Electronics Module (CEM)
602
User Interface 614
Service Interface/ Diagnostics 616
Status / Fault 618
User Interface Module (UIM)
606

Fig. 6

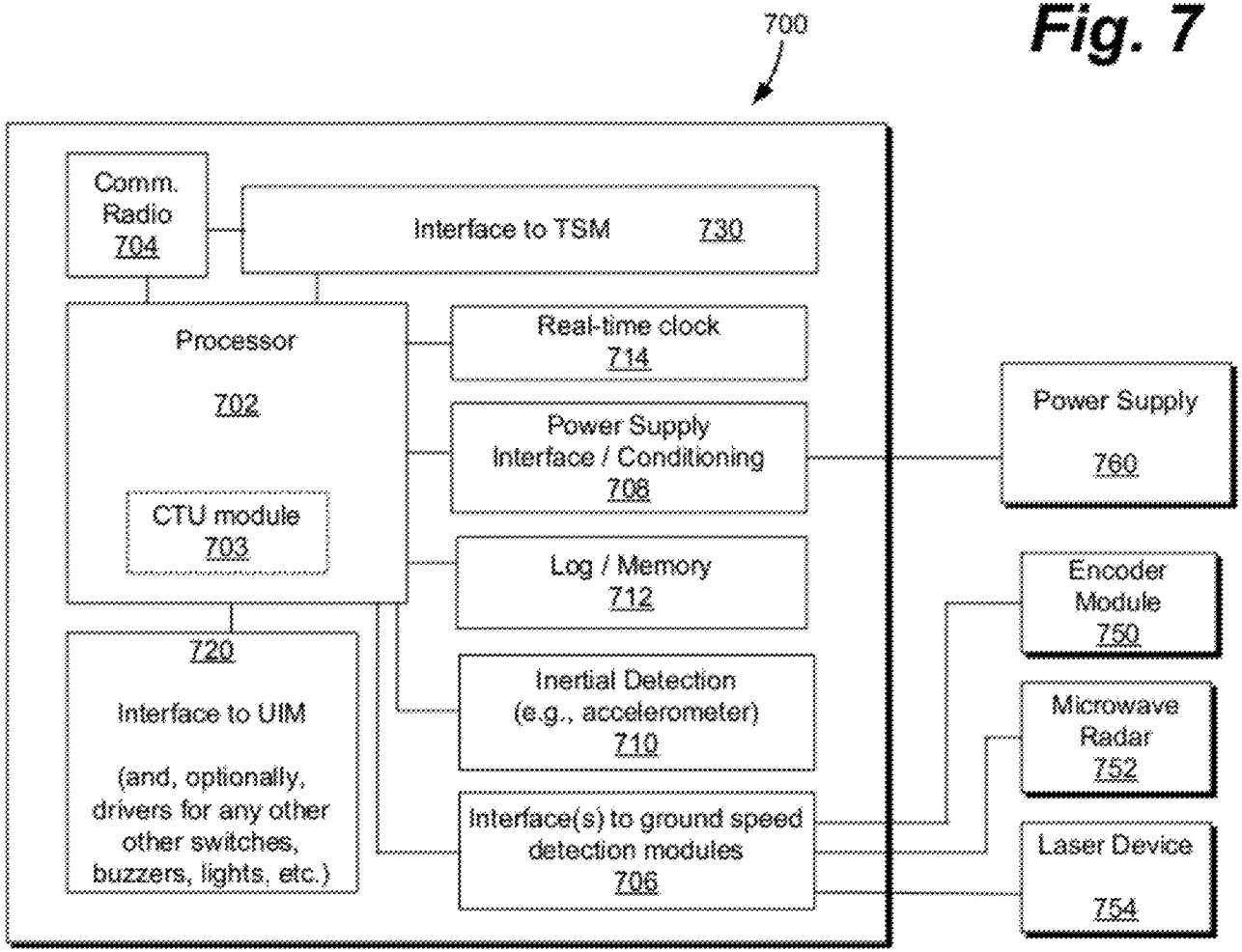
700
Comm. Radio 704
Interface to TSM 730
Processor 702
CTU module 703
Real-time clock 714
Power Supply Interface / Conditioning 708
Log / Memory 712
Inertial Detection (e.g., accelerometer) 710
Interface(s) to ground speed detection modules 706
720
Interface to UIM
(and, optionally, drivers for any other other switches, buzzers, lights, etc.)
Power Supply 760
Encoder Module 750
Microwave Radar 752
Laser Device 754

Fig. 7

Fig. 8

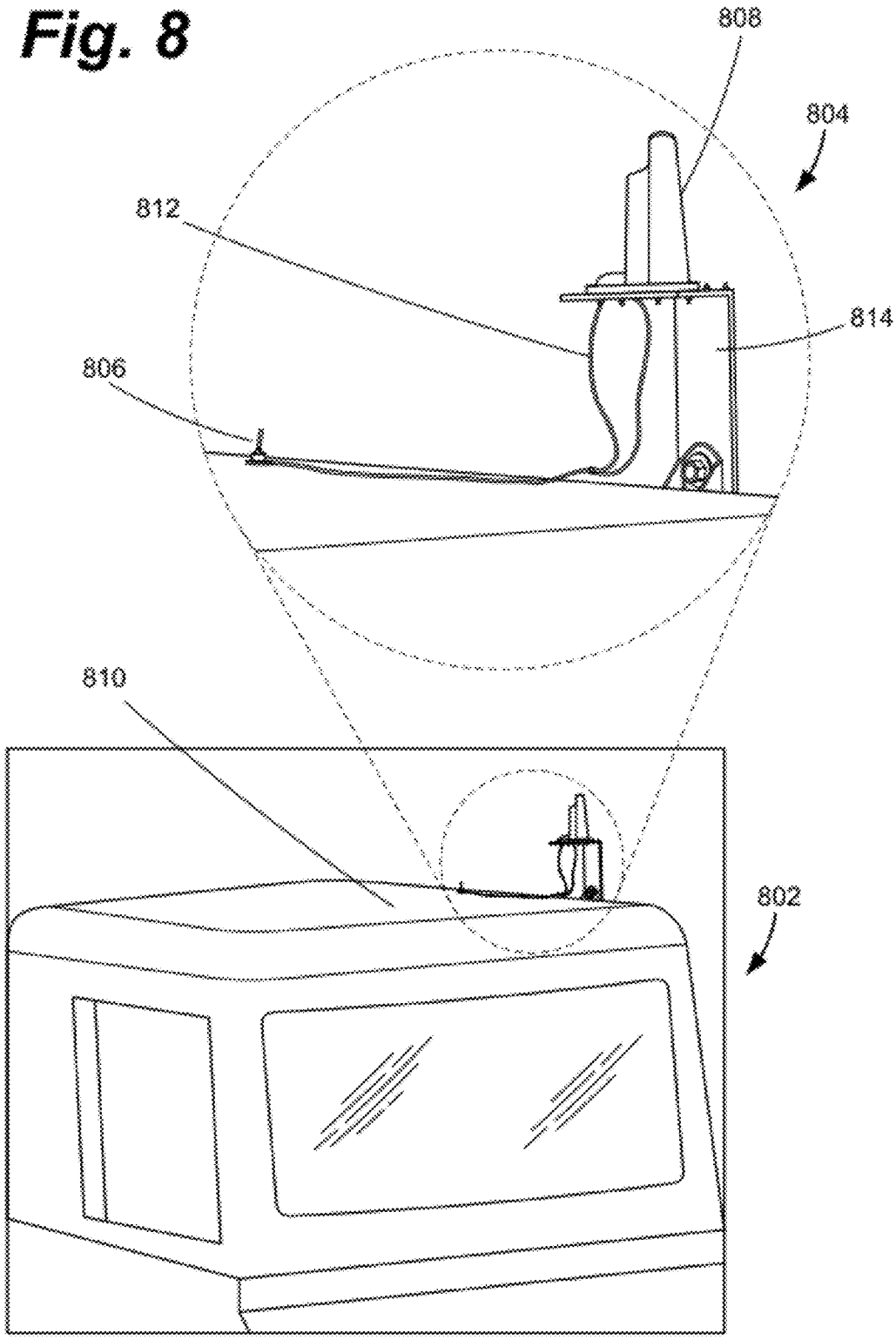

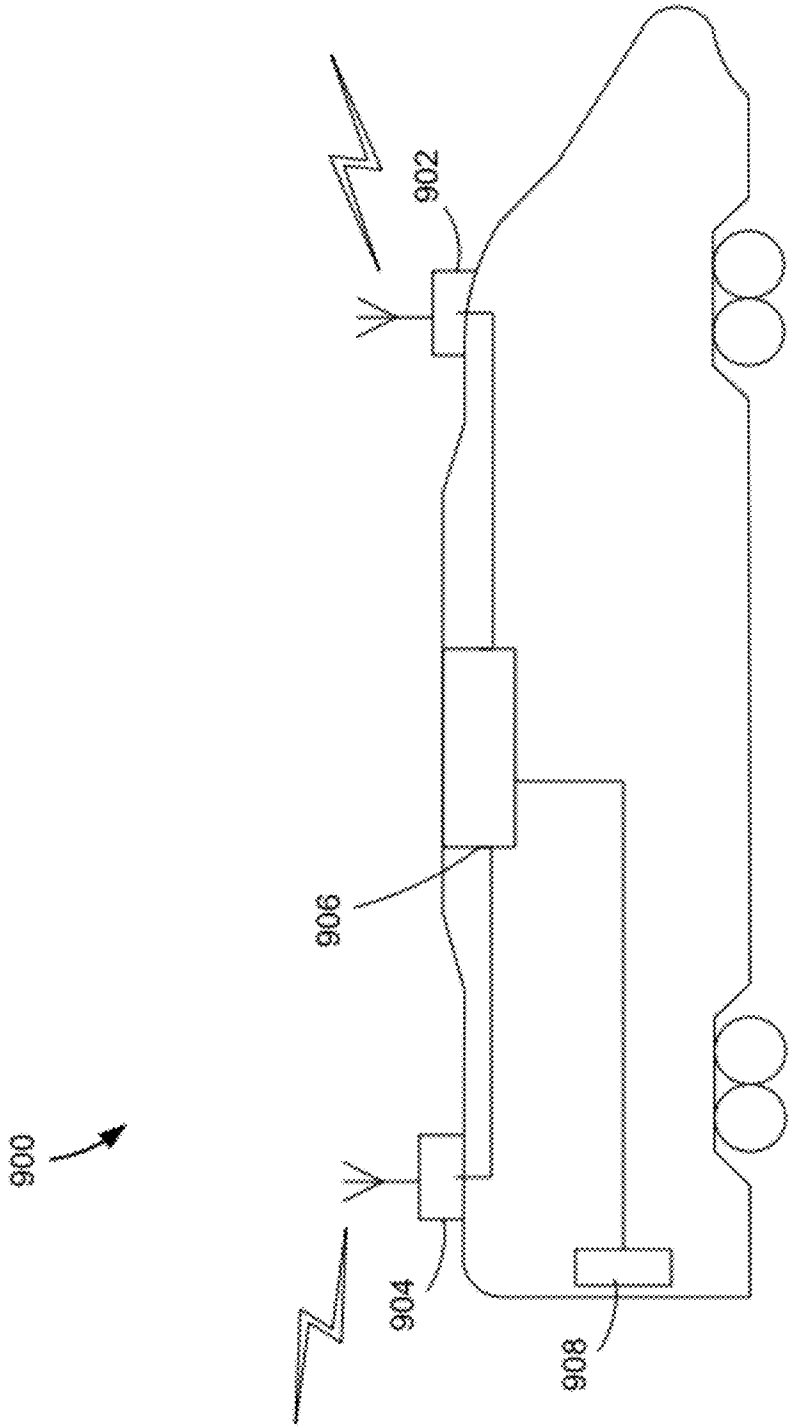

Fig. 9

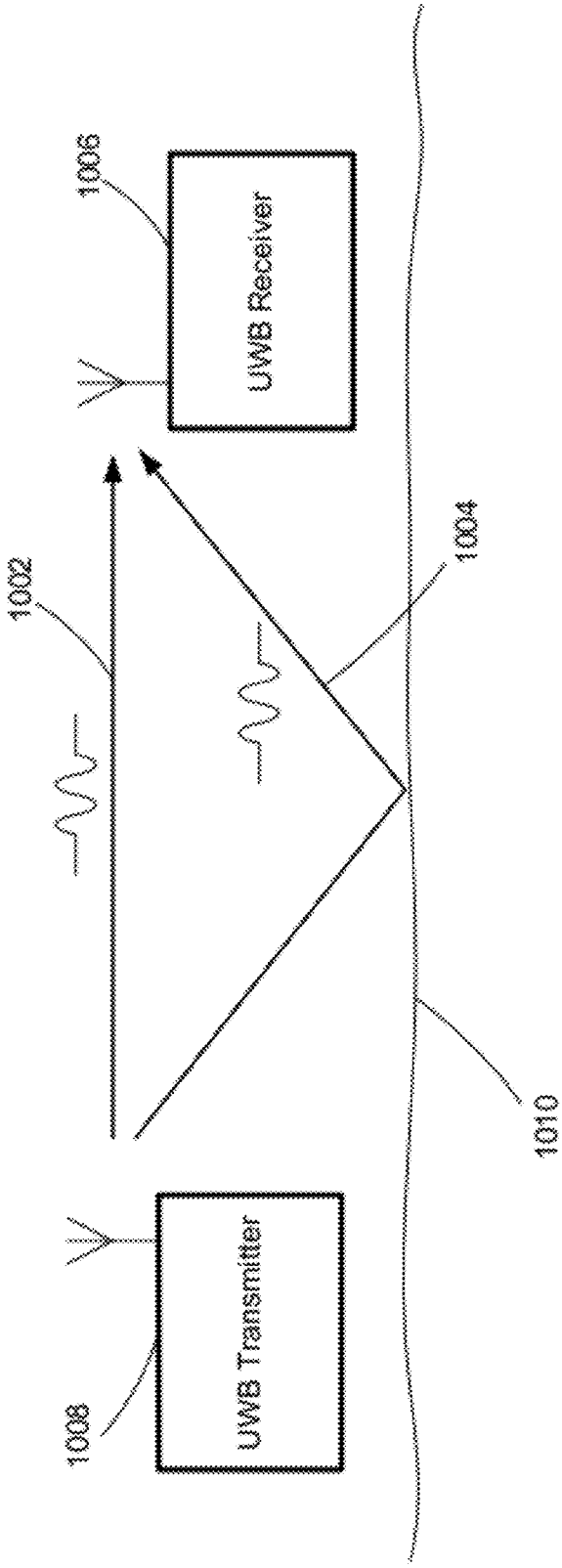

Fig. 10

Fig. 11

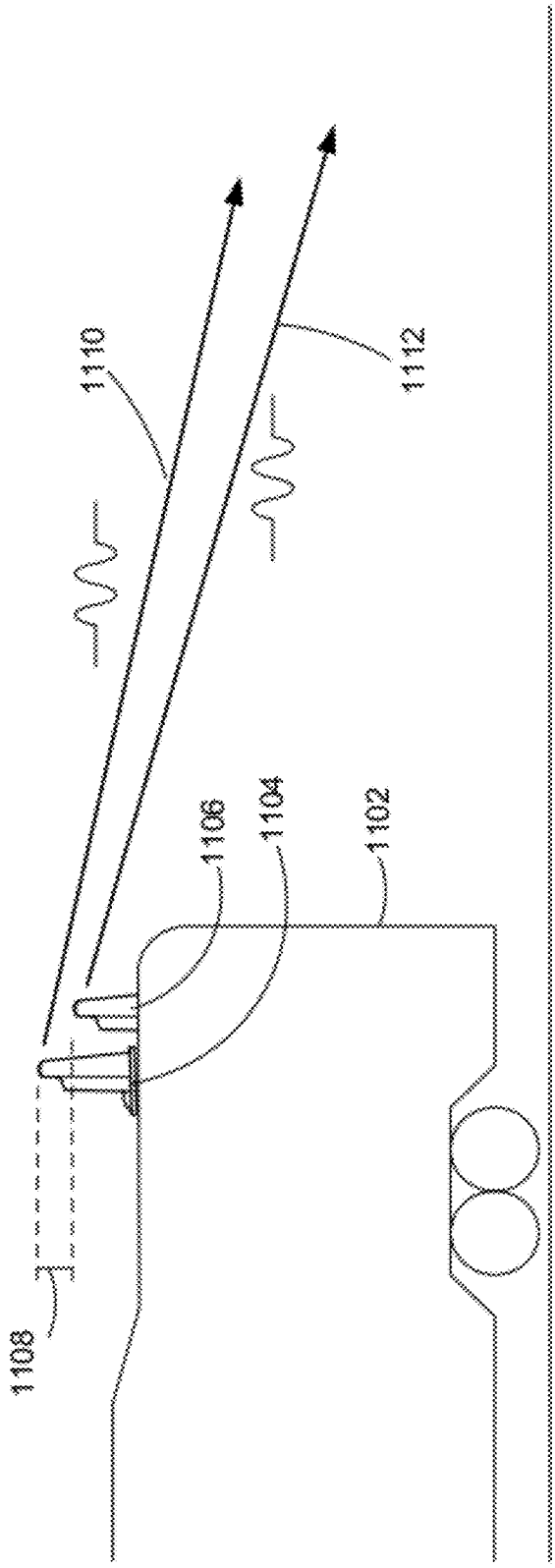

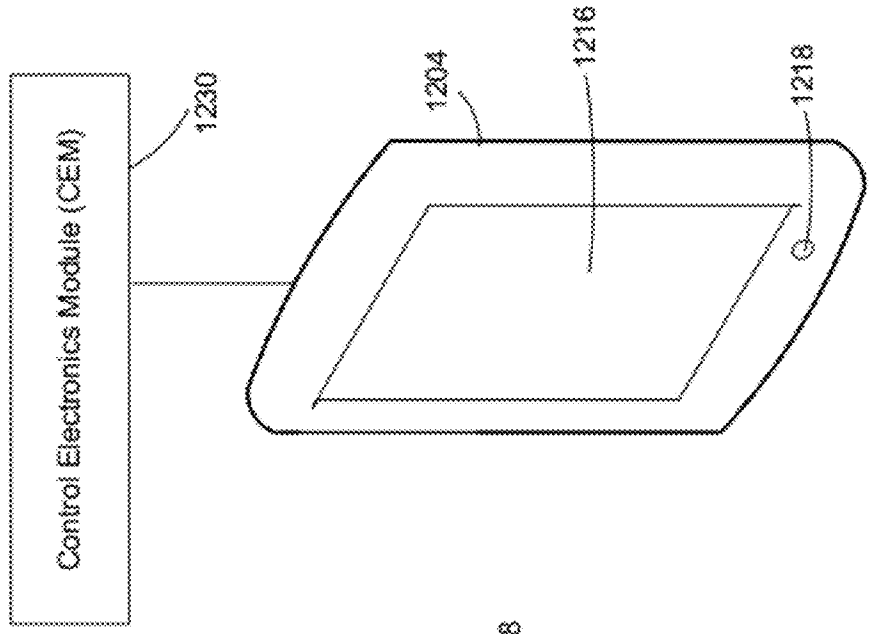

Fig. 12B

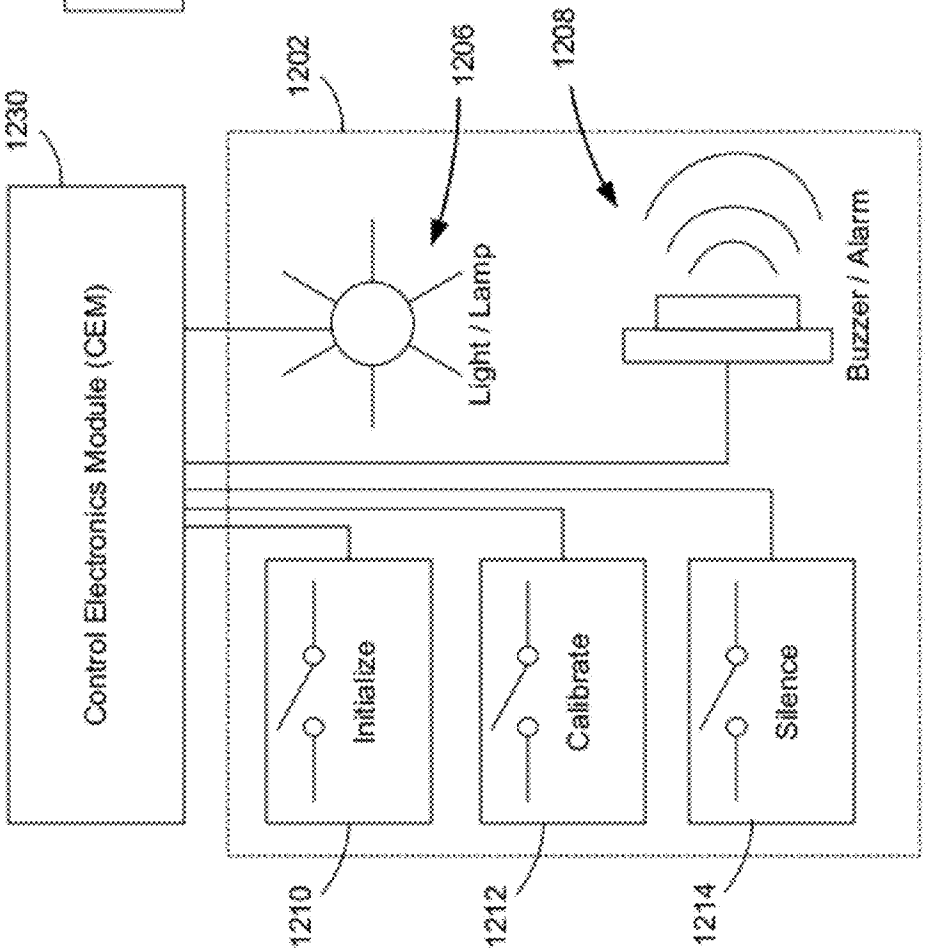

Fig. 12A

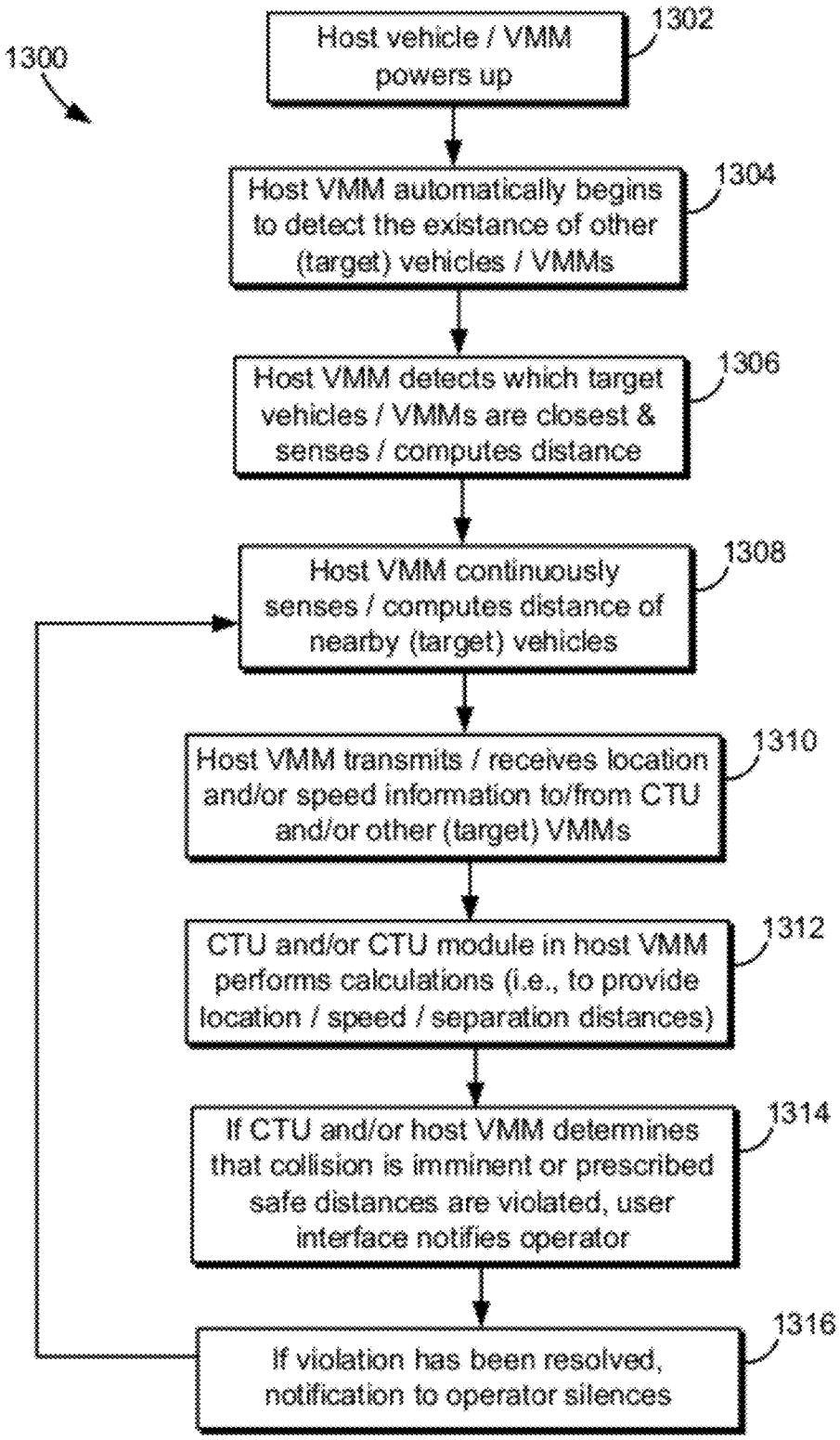
1300
Host vehicle / VMM powers up
1302
Host VMM automatically begins to detect the existance of other (target) vehicles / VMMs
1304
Host VMM detects which target vehicles / VMMs are closest & senses / computes distance
1306
Host VMM continuously senses / computes distance of nearby (target) vehicles
1308
Host VMM transmits / receives location and/or speed information to/from CTU and/or other (target) VMMs
1310
CTU and/or CTU module in host VMM performs calculations (i.e., to provide location / speed / separation distances)
1312
If CTU and/or host VMM determines that collision is imminent or prescribed safe distances are violated, user interface notifies operator
1314
If violation has been resolved, notification to operator silences
1316

Fig. 13

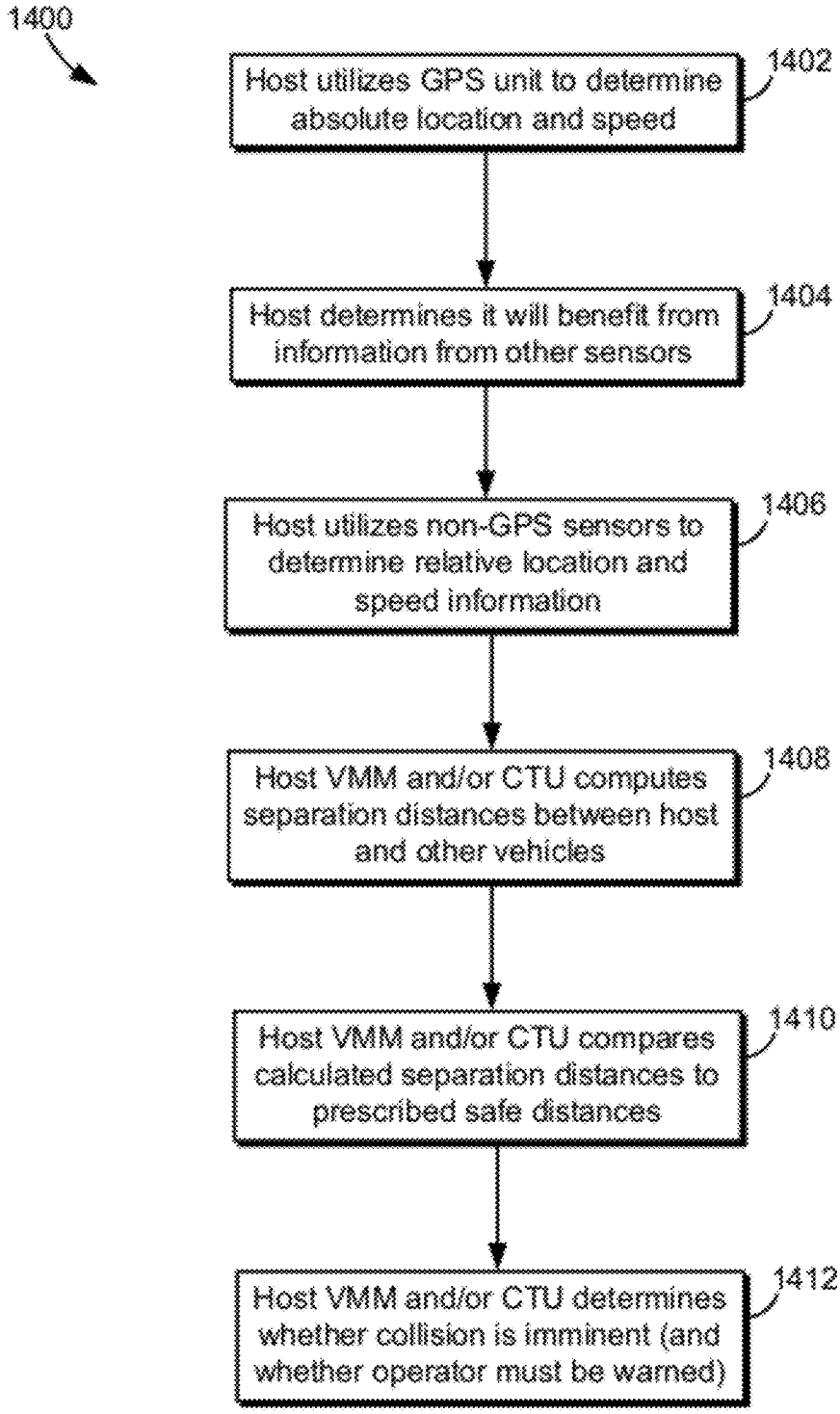
1400
Host utilizes GPS unit to determine absolute location and speed
1402
Host determines it will benefit from information from other sensors
1404
Host utilizes non-GPS sensors to determine relative location and speed information
1406
Host VMM and/or CTU computes separation distances between host and other vehicles
1408
Host VMM and/or CTU compares calculated separation distances to prescribed safe distances
1410
Host VMM and/or CTU determines whether collision is imminent (and whether operator must be warned)
1412

Fig. 14

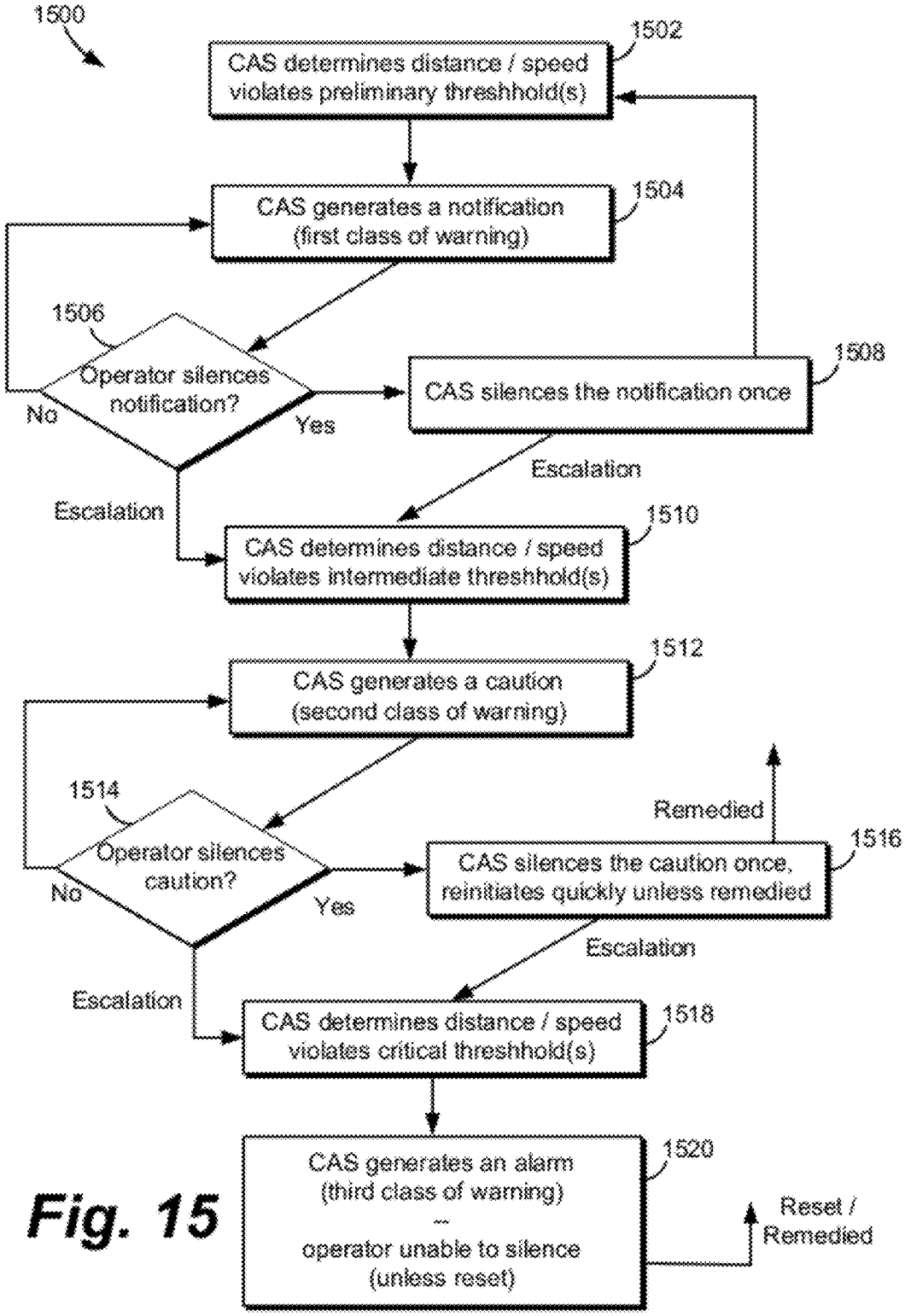
1500
1502
CAS determines distance / speed violates preliminary threshhold(s)
1504
CAS generates a notification (first class of warning)
1506
Operator silences notification?
No
Yes
1508
CAS silences the notification once
Escalation
Escalation
1510
CAS determines distance / speed violates intermediate threshhold(s)
1512
CAS generates a caution (second class of warning)
1514
Operator silences caution?
No
Yes
Remedied
1516
CAS silences the caution once, reinitiates quickly unless remedied
Escalation
Escalation
1518
CAS determines distance / speed violates critical threshhold(s)
1520
CAS generates an alarm (third class of warning) -- operator unable to silence (unless reset)
Reset / Remedied

Fig. 15

COLLISION AVOIDANCE SYSTEM FOR RAIL LINE VEHICLES

CROSS-REFERENCE TO RELATED APPLICATIONS

This application claims priority from the following three U.S. Provisional Patent Applications: (1) No. 61/519,201 filed on May 19, 2011, (2) No. 61/627,697 filed on Oct. 17 2011, and (3) No. 61/598,750 filed on Feb. 14, 2012. The disclosures of these three applications are incorporated by reference herein in their entireties.

FIELD

Certain embodiments of the present disclosure relate to a collision avoidance system for use in the railroad industry. More particularly, certain embodiments of the present disclosure relate to one or more systems, methods, techniques and/or solutions that monitor the location of and separation distance between rail line vehicles, for example, railroad maintenance vehicles.

BACKGROUND

Railroad companies must perform maintenance on their tracks and other infrastructure associated with their rail lines. The railroad companies employ many different types of rail mounted vehicles to accomplish such maintenance, and these vehicles can range widely in their size, weight and shape because the vehicles perform a variety of tasks. These vehicles may be employed in one or more work gangs, each work gang including anywhere from four to forty vehicles. As such, many vehicles may be working in close proximity on a single track.

The speed at which the work gang is traveling, and each vehicle within the gang, can vary widely at any given time. For example, the work gang may be traveling to a work site, in which case the work gang, and each vehicle, is traveling at a higher rate of speed than when the vehicles are working at a worksite. When the vehicles are working at a work site, each vehicle is generally traveling at a lower rate of speed or not at all. Within a work gang, the speeds of the vehicles may vary depending on the task that each vehicle is performing.

Railroads have had several severe collisions and other accidents, some resulting in fatalities, when adequate spacing has not been maintained between rail mounted vehicles. Railroad companies now require that a specific spacing be maintained between vehicles when traveling to/from work sites and when working at a work site.

BRIEF SUMMARY

One or more systems, methods, techniques and/or solutions are provided for a collision avoidance system for use in the railroad industry that may monitor the location of and separation distance(s) between rail line vehicles, for example railroad maintenance vehicles, substantially as shown in and/or described in connection with at least one of the figures, as set forth more completely in the claims.

These and other advantages, aspects and novel features of the present invention, as well as details of an illustrated embodiment thereof, will be more fully understood from the following description and drawings.

BRIEF DESCRIPTION OF THE DRAWINGS

FIGS. **1**A-**1**C depict illustrations of example rail line vehicles that may utilize a collision avoidance system, in accordance with one or more embodiments of the present disclosure.

FIG. **2** depicts illustrations of example rail line vehicles that may utilize a collision avoidance system, in accordance with one or more embodiments of the present disclosure.

FIG. **3** depicts an illustration of an example collision avoidance system, in accordance with one or more embodiments of the present disclosure.

FIG. **4** depicts an illustration of an example collision avoidance system, in accordance with one or more embodiments of the present disclosure.

FIG. **5** depicts an illustration of an example collision avoidance system, in accordance with one or more embodiments of the present disclosure.

FIG. **6** depicts a block diagram of an example vehicle mounted module, in accordance with one or more embodiments of the present disclosure.

FIG. **7** depicts a block diagram of an example control electronics module, in accordance with one or more embodiments of the present disclosure.

FIG. **8** depicts an illustration of side angled view of the upper portion of an example rail line vehicle and an example component mounting configuration, in accordance with one or more embodiments of the present disclosure.

FIG. **9** depicts an illustration of an example rail line vehicle, including a vehicle mounted module, in accordance with one or more embodiments of the present disclosure.

FIG. **10** depicts a block diagram illustrating example Ultra Wideband units, in accordance with one or more embodiments of the present disclosure.

FIG. **11** depicts an illustration of a side view of an example rail line vehicle including multiple Ultra Wideband units, in accordance with one or more embodiments of the present disclosure.

FIGS. **12**A and **12**B depict illustrations of example user interfaces, in accordance with one or more embodiments of the present disclosure.

FIG. **13** depicts a flow diagram that shows exemplary steps in the operation of a collision avoidance system, in accordance with one or more embodiments of the present disclosure.

FIG. **14** depicts a flow diagram that shows exemplary steps in the operation of a collision avoidance system, in accordance with one or more embodiments of the present disclosure.

FIG. **15** depicts a flow diagram that shows exemplary steps in the operation of a collision avoidance system, in accordance with one or more embodiments of the present disclosure.

DETAILED DESCRIPTION

Previous systems for preventing collisions of rail line vehicles have typically utilized a single sensor, for example a GPS or radar-based sensor, to monitor the approximate location of rail mounted vehicles. A shortcoming of single sensor systems, such as ones that depend on GPS sensors, is that the rail vehicles being monitored often enter into "blackout" areas (for example, around buildings, in the mountains, canyons, around sharp curves or in tunnels) where the single sensor may be unable to accurately determine the vehicle's location. For example, a GPS sensor may be unable to communicate with satellites when the vehicle is in a tunnel. Some

previous systems attempted to solve this problem by performing a simple "dead reckoning" calculation, where the last known speed and direction of the vehicle are used to estimate the current position of the vehicle until the sensor signal is reestablished. This estimation calculation may not be precise enough to prevent collisions in work gangs because of the speed variation between vehicles. When the vehicles are traveling to a work site, the higher speeds introduce the risk of collision, and when the vehicles are working at a work site, the vehicle are frequently stopping and starting, and this variation in speed between vehicles renders the dead reckoning approach an unsuitable approximation.

A limitation of radar-based sensors in particular is that they may initiate numerous false positives (warning alarms that are not warranted). With the normal clutter of maintenance operations (people, equipment, trains on adjacent tracks, trackside structures, trestle sides, tunnel walls), radar-based sensors can become confused as to when vehicles are actually in danger of colliding. More specifically, radar-based sensors must deal with the following dilemma: the sensor must scan a wide enough field so that it can detect collision risks when vehicles are traveling on curves at higher speeds, yet as radar-based sensors scan wider fields, they become more susceptible to false detections, for example because the sensor also senses clutter. False detections can result in a dangerous work environment, especially if operators become immune to warnings.

The present disclosure describes a collision avoidance system (CAS) for rail line vehicles that may utilize a combination of sensor technologies, including an Ultra Wideband (UWB) sensing technology, to counter the limitations of previous systems, and to significantly reduce the potential for vehicle collisions and to enhance the safe operation of a variety of railway vehicles. The present technology is designed to reliably track the location and speed of railway vehicles, as well as the distance between vehicles over a wide variety of track and terrain conditions. The present technology may monitor the separation distance between rail line vehicles by utilizing sensors that are mounted on each vehicle in a group or work gang, where a work gang may comprising a plurality of railway vehicles, including railway maintenance equipment.

The CAS may perform the techniques and/or solutions described herein for a wide variety of railway vehicles, for example, railway maintenance equipment/vehicles, railcars, hyrail vehicles, train cars, train engines and other rail line vehicles. FIGS. **1**A-**1**C depict illustrations of types of example rail line vehicles (vehicles **102**, **104**, **106**) that may utilize a CAS or that a CAS as described herein may track. FIGS. **1**A and **1**B may depict example rail line maintenance vehicles and FIG. **1**C may depict an example hyrail vehicle. FIG. **2** depicts illustrations of more example rail line vehicles (vehicles **202**, **204**) that may utilize a CAS or that a CAS system may track, and also shows an exemplary safe distance **206** between the two vehicles **202**, **204**. The CAS may track vehicles such as the ones depicted in FIGS. **1** and **2** (and others) over a wide range of terrain (e.g., mountains, canyons, hills, trees, tunnels, curves and trestles) and during a variety of weather conditions (e.g., rain, fog, snow, ice, bright sunlight).

The CAS may be designed to introduce redundancy into the system, for example in the form of multiple types of sensor technologies and/or multiple sensors of a particular type of technology. One benefit of utilizing redundant sensors may be that some sensors may function properly when other sensors are not functioning optimally or at all. Another benefit of utilizing redundant sensors is that different sensors may be adapted to sense objects and different distances and to different levels of accuracy. In some embodiments, a CAS may utilize a combination of distance sensors so that the CAS is adapted to detect vehicles that are either close or far away, and so that the CAS may detect vehicle separation to within a few inches if the vehicles are close.

Various embodiments of the present disclosure enable a rail line vehicle having a vehicle mounted module. The vehicle mounted module may comprise a transponder sensor module that includes an ultra wideband unit and a wireless communications antenna. The ultra wideband unit may be operable to detect a distance between the rail line vehicle and at least one other vehicle. The wireless communications antenna may be operable to send and receive data over the air. The vehicle mounted module may further comprise a control electronics module that includes a processor that is in communication with at least the ultra wideband unit. The vehicle mounted module may further comprise a user interface module including a user interface. The user interface may be operable to provide a vehicle operator with information and may be operable to accept input from the vehicle operator. The vehicle mounted module may be in communication with one or more central tracking units by way of the wireless communications antenna. The one or more central tracking units may be operable to track the location of the rail line vehicle and at least one other vehicle.

In some embodiments, the vehicle mounted module further comprises a central tracking unit module that is operable to track the location of at least one other vehicle. In some embodiments, the vehicle mounted module may be operable to utilize information generated by the global positioning system and the ultra wideband unit to determine whether one or more vehicle separation criteria are violated, and generate a warning if one or more vehicle separation criteria are violated. In some embodiments, the vehicle mounted modules comprises one or more additional transponder sensor modules. The vehicle mounted module may be operable to accept calibration information regarding the length of the rail line vehicle and the mounting locations of the transponder sensor module and the one or more additional transponder sensor modules.

In some embodiments, the transponder sensor module further includes a global positioning system. The global positioning system may be operable to receive information from one or more satellites and may be operable to determine the absolute position of the rail line vehicle. In some embodiments, the transponder sensor module further includes one or more of a laser device, a radar sensor and an infrared sensor. In some embodiments, the vehicle mounted modules may comprise an additional ultra wideband unit, wherein an offset exists between the ultra wideband unit and the additional ultra wideband unit once the two units are mounted on the rail line vehicle. In some embodiments, the ultra wideband unit is adapted to transmit and receive signals with varying center frequencies.

In some embodiments, the user interface module further includes a service interface that may be operable to allow the vehicle operator to configure, calibrate, service, maintain, diagnose, update and/or install information on vehicle mounted module. In some embodiments, the user interface is a touchscreen including a screen. The touchscreen may be operable to display one or more screens, menus, options and/or functions, and accept user input from the vehicle operator by allowing the vehicle operator to touch the screen of the touchscreen.

In some embodiments, the control electronics module further includes one or more interfaces that may be operable to

communicate with ground speed detection modules. The ground speed detection modules may include one or more of a microwave radar, a laser device, an infrared sensor and an ultra wideband sensor. In some embodiments, the control electronics module further includes one or more inertial measurement units. In some embodiments, the control electronics module further includes an inertial measurement unit.

In some embodiments, the vehicle mounted module may be operable to utilize a progressive warning feature that generates a warning if one or more vehicle separation thresholds are violated. The rate, frequency, prominence and/or severity of the warning may increase as the violation of the vehicle separation threshold becomes more critical. The progressive warning feature may utilize an adaptive threshold feature that modifies the one or more vehicle separation thresholds based on the speed of the rail line vehicle and the speed of one or more nearby vehicles. In some embodiments, the vehicle mounted module may be operable to utilize a stopping distance calibration feature that measures a stopping distance. The stopping distance may indicate how quickly the rail line vehicle can stop under current conditions. The measured stopping distance may be used to modify one or more safe separation distance thresholds.

Various embodiments of the present disclosure enable a collision avoidance system for rail line vehicles that may comprise one or more vehicle mounted modules, each mounted on a vehicle. Each vehicle mounted module may comprise a transponder sensor module including an ultra wideband unit and a wireless communications antenna. The ultra wideband unit may be operable to detect a distance between the vehicle on which the vehicle mounted module is mounted and at least one other vehicle. The wireless communications antenna may be operable to send and receive data over the air. Each vehicle mounted module may comprise a control electronics module including a processor that is in communication with at least the ultra wideband unit. Each vehicle mounted module may comprise a user interface module including a user interface. The user interface may be operable to provide a vehicle operator with information and may be operable to accept input from the vehicle operator.

The collision avoidance system that may comprise a central tracking unit that is in communication with the one or more vehicle mounted modules. The central tracking unit may be operable to track the location of the one or more vehicle mounted modules. In some embodiments, the central tracking unit may be distributed among the one or more vehicle mounted modules, wherein each of the one or more vehicle mounted modules includes a central tracking unit component. Each central tracking unit component may be in communication with the vehicle's control electronics module. In some embodiments, the central tracking unit may be disposed in a discrete housing.

In some embodiments, the transponder sensor module further includes a global positioning system. The global positioning system may be operable to receive information from one or more satellites and may be operable to determine the absolute position of the vehicle mounted module. Each vehicle mounted module may be operable to utilize information generated by the global positioning system, the ultra wideband unit and the central tracking unit to determine whether one or more vehicle separation criteria are violated, and generate a warning if one or more vehicle separation criteria are violated.

FIG. **3** depicts an illustration of an example collision avoidance system (CAS) **300** for rail line vehicles according to one or more embodiments of the present disclosure. For example purposes only, FIG. **3** depicts a work gang including only two vehicles **302**, **304**. In this embodiment, the CAS **300** includes four main types of components—transponder sensor modules (TSMs) (for example, TSMs **306**, **308**), control electronics modules (CEMs) (for example, CEMs **310**, **312**), user interface modules (UIMs) (for example, UIMs **314**, **316**) and a central tracking unit (CTU) (for example, CTU **318**). Referring to a single vehicle (vehicle **302** for example), modules that are located in or on the vehicle (for example, TSM **306**, CEM **310** and UIM **314**) may collectively be referred to as the vehicle mounted module (VMM), even though the individual modules and related components may or may not be housed within a unitary package/enclosure.

In some embodiments, the VMM components may not be installed on vehicles at production. In these examples, the VMM components may be designed to allow retrofitting into existing railway vehicles without requiring heavily intrusive installation.

The CAS may include a central tracking unit (CTU), for example the CTU **318** of FIG. **3**. The CTU may operate to centrally track all the vehicles in one or more work gangs. The CTU may adapt a tracking software and/or system to monitor individual vehicles. The CTU may include technology adapted to dynamically define which vehicles are in a work gang, and/or which vehicles the CTU should keep track of. The CTU may accept information from VMMs mounted inside vehicles in the work gang, information such as location, speed, separation distance and the like. The CTU may have the ability to analyze and/or store various types of data about vehicles in one or more work gangs. For example, the CTU may analyze absolute and relative positioning data and speed data from vehicles in the work gang. In some examples, the CTU may determine if a separation distance between two vehicles has been violated, indicating that an accident may be likely. Additionally, the CTU may track alarm status of the vehicles in a work gang so that the central tracking unit becomes aware when an accident may have occurred. In another example, the central tracking unit may track data regarding accidents.

In the embodiment depicted in FIG. **3**, the CTU **318** may be located in a discrete housing **320** (also referred to as a module, unit, bungalow or the like). It should be understood that the technology and features of the CTU need not reside in such a discrete housing **320** and may be distributed amongst the vehicles in the work gang, for example with a CTU module/component in each VMM. In embodiments where the CTU is located in a housing **320** that is discrete from the vehicles, the VMM may include a TSM, CEM, and UIM. In embodiments where the CTU is distributed amongst the vehicles, the VMM may further include a CTU module/component.

FIG. **4** depicts an illustration of an example collision avoidance system (CAS) **400** according to one or more embodiments of the present disclosure. In this embodiment, the system **400** does not include a discrete housing for the CTU technology. This embodiment still utilizes technology, functionality and features similar to those employed in a system (such as the CAS **300** of FIG. **3**) with a CTU disposed in a discrete housing. In this embodiment, the functionality and intelligence of the CTU is dispersed and/or distributed among the VMMs (for example VMMs **402**, **404**) in the vehicles within a work gang. With this dispersed design (also referred to as "dispersed thinking"), each VMM includes its own CTU module/component that tracks the location of other vehicles in the work gang, like a CTU disposed in discrete housing would do. It should also be understood that although this embodiment describes a central tracking unit component, the

central tracking unit circuitry and technology may be incorporated into other components/subcomponents of the VMM, such as the CEM.

For example purposes, FIGS. **3** and **4** each show a work gang including only two vehicles, but it should be understood that work gangs may include more than two vehicles. FIG. **5** depicts an illustration of an example collision avoidance system (CAS) **500** with a work gang that includes more than two vehicles, according to one or more embodiments of the present disclosure. In this embodiment, each vehicle (for example, vehicles **502**, **504**, **506**) in the work gang may be equipped with a VMM and each VMM may communicate with nearby VMMs (in nearby vehicles) as well as with a CTU **518** in a discrete housing, as can be seen in FIG. **5**. In other embodiments of the present disclosure, each vehicle in a work gang is equipped with a VMM and each VMM communicates with nearby VMMs (in nearby vehicles) including a CTU module/component within each VMM (not depicted in FIG. **5**). In these embodiments, there may be no CTU in a discrete housing such as the CTU **518** depicted in FIG. **5**. FIG. **5** depicts a work gang with three vehicles, but it should be understood that a work gang may include more than three vehicles. As the size of the work gang becomes larger, the VMM mounted on each vehicle may communicate with more VMMs (in nearby vehicles), as well as with the CTU in a discrete housing (or a CTU module/component within the VMMS in each vehicle).

FIG. **6** depicts a block diagram of an example vehicle mounted module (VMM) **600**, in accordance with one or more embodiments of the present disclosure. The VMM may include one or more control electronics modules (CEM) **602**, one or more transponder sensor modules (TSM) **604**, and one or more user interface modules (UIM) **606**. The TSM **604** may further include a wireless communications antenna **608** (for example an RF antenna such as a 2.4 GHz radio antenna) that is operable to send and receive data over the air, for example to/from remote systems. The TSM **604** may further include a GPS unit **610** one or more vehicle communication devices **612**. The UIM **606** may further include a user interface **614**, a service interface **616** (optionally including diagnostics components/interfaces) and status/fault indicators **618**. Additionally, the VMM **600** may receive power from a power supply **640** that may provide power to one or more vehicle mounted module components, for example components disposed within the CEM **602**.

Wireless communications antenna **608** may be, for example, an RF antenna such as a 2.4 GHz radio antenna. As depicted in FIG. **6**, a VMM **600** may communicate with a CTU **630** (for example a CTU located in a discrete housing or a number of CTU modules located in other VMMs) through a wireless communications antenna **608**. The wireless communications antenna **608** may be housed in the TSM, or it may be housed separately and perhaps connected to CEM **602** independently. The circuitry for the radio associated with the wireless communications antenna **608** may be disposed in the TSM **604**, or may be disposed in the CEM **602** and be connected to the wireless communications antenna **608** via a wired connection. The VMM **600** may transmit a variety of information to the CTU **630**, for example, absolute position data, relative position data and speed data of the vehicle. Such information may have been obtained by the VMM utilizing various components and/or sensors, for example, the GPS unit **610**, the UWB unit **620**, and/or other sensors. The VMM **600** may transmit other information to the CTU **630**, for example, status/fault and/or diagnostic information regarding the health of the VMM and its components. The VMM **600** may gather data from one or more satellites **634** utilizing a GPS unit **610**, for example to acquire absolute positioning information. The VMM **600** may communicate with other CAS/VMM-equipped vehicles through one or more vehicle communication devices **612** and/or through a wireless communications antenna **608**. In some embodiments, the vehicle communications devices **612** may include one or more separate wireless communications antennas (and perhaps associated radios) from antenna **608**.

Referring to FIG. **6**, in some embodiments, a CAS may not include a discrete CTU such as the one shown in FIG. **6** at CTU **630**. In these embodiments, the VMM may include a CTU module/component **631** that tracks the location of (and provides location information to) other vehicles in the work gang by communicating with other CAS/VMM-equipped vehicles directly. The CTU module/component **631** may operate like (and include similar technology to) a discrete CTU (such as CTU **630**) would operate in other embodiments. The CTU module/component may include technology adapted to dynamically define which vehicles are in the work gang, and/or which vehicles the CTU module/component should keep track of. It should also be understood that although the foregoing describes a CTU module/component, the CTU circuitry and technology may be incorporated into other modules, components and subcomponents of the VMM, such as the CEM. In some embodiments, the CTU module/component may be a software feature that is executed by a processor in the CEM.

VMM subcomponents (for example, the components included within the TSM, CEM and UIM) may be packaged together within a single enclosure. For example, in some embodiments, the CEM and UIM (and optionally, the CTU module) may be combined/disposed in a single package. One benefit of a single package may be that it simplifies the installation process. In alternate embodiments, or one or more VMM components and/or subcomponents may be packaged separately from the other components/subcomponents. The various components and/or subcomponents may be located separately, optionally within separate enclosures, and each separate component may be connected to a main VMM enclosure and/or to other VMM enclosures via wires or a short range wireless link. For example, wireless communications antenna **608** and/or one or more vehicle communication devices **612** may be mounted separately (optionally, in one or more enclosures) on the upper extremity of the vehicle, for example to reduce signal interference and to allow for proper antenna placement (see FIG. **8**). Likewise, the user interface **614** may be located in the crew area or the passenger cab. The number of physical packages/enclosures included in each VMM and the mounting location of each package/enclosure may depend on the type (height, length, etc.) of vehicle the VMM is mounted on, or may depend on the configuration of the VMM. In one example, all of the components of the vehicle mounted module are housed within a single weatherproof enclosure. In another example, the wireless communications antenna (for example, wireless communications antenna **608**) (or the entire wireless communications radio including the antenna) may be installed at a distance from other VMM enclosures/components to avoid interference between the wireless communications antenna and other components of the VMM, for example the UWB sensor.

FIG. **7** depicts an illustration of a block diagram of an example control electronics module (CEM) **700**, in accordance with one or more embodiments of the present disclosure. The CEM **700** may include a processor **702**, a wireless communications radio **704** (such as an RF radio), an interface to a TSM **730**, an interface to a UIM **720**, one or more interfaces **706** to ground speed detection modules, a power

supply interface/power conditioning system **708**, and a real-time clock **714**. Examples of ground speed detection modules that may connect to interface **706** include an encoder module **750**, a microwave radar **752** and/or a laser device **754**. The interface to the UIM **720** may further include one or more drivers to power visual and/or audio indicators. In some embodiments, the CEM **700** may include one or more vehicular interfaces (interfaces to existing vehicle systems), for example a CAN interface, braking systems, speed indicators, equipment operating mode status indications and the like. The CEM **700** may include an inertial measurement unit **710** that includes one or more devices, for example, one or more accelerometers and/or gyroscopes. The CEM **700** may include a log/memory **712**.

It should be understood that although FIG. **7** depicts some or all of the aforementioned subcomponents as being contained within the CEM **700**, different configurations of the VMM are contemplated by this disclosure, including various combinations of VMM components/enclosures. Therefore, in some embodiments, the subcomponents depicted in FIG. **7** may be disposed outside of the CEM **700**, for example in one or more other VMM enclosures. And in other embodiments, subcomponents other than those depicted in FIG. **7** may be disposed inside of the CEM **700**, for example one or more subcomponents that may reside in other VMM enclosures in other embodiments. In some examples, some of the subcomponents depicted in FIG. **7** may reside in the UIM and/or the TSM and may connect to the CEM by way of wires or wireless connection(s).

Referring again to FIG. **7**, CEM **700** may include a processor **702**. The processor **702** may, among other operations, process information received from the vehicle communication devices, for example via the interface to the TSM **730**. For example processor **702** may be in communication with and process information from a UWB unit via TSM interface **730**. The processor **702** may also process information received from other modules, components and/or subcomponents of the VMM. The processor **702** may handle information and/or perform computations to, among other things, track other vehicles in a work gang and determine which vehicles present a potential hazard. It should be understood that the CTU may also process location and speed information from vehicles in a work gang and may also track vehicles in a work gang to determine when collisions may be imminent. The present disclosure contemplates various types of configurations whereby some or all of the tracking and processing components of the CAS may be located within the VMMs (for example, within a CTU module), within a CTU in a discrete housing, or a combination of both. In the example where a CTU module/component performs tracking of other vehicles, a CTU module **703** may be disposed within the CEM **700**, perhaps implemented in processor **702**. In some embodiments, the CTU module **703** may be a software feature that is executed by the CEM processor **702**.

CEM **700** may include an inertial measurement unit **710** that includes one or more devices, for example, one or more accelerometers and/or gyroscopes. The inertial measurement unit **710** may be operable to, among other functions, detect changes in the speed of a traveling vehicle. Detecting changes in vehicle speed may be useful to aid in dead reckoning solutions instead of or in conjunction with short range distance measurement sensors. For example, if a vehicle travelled into a tunnel and the GPS unit could not establish a connection to satellites to provide positioning information, an inertial measurement unit may provide information regarding whether vehicles in a work gang have changed speeds while in the tunnel. An inertial measurement unit **710** may also be operable to detect sudden changes in speed, for example indicating that a vehicle was involved in a collision, or perhaps indicating some other event. The inertial measurement unit **710** (or some other VMM component) may then store/log data regarding the activities of the vehicle (and/or VMM components) surrounding the time of the event, similar to the way a flight recorder records events proximate to a plane crash. This recording component may collect information from the inertial measurement unit **710** and/or from other VMM components, for example from a UWB unit.

CEM **700** may include a real-time clock **714**. The real-time clock **714** may provide accurate (optionally, synced) time readings, for example to facilitate development evaluation testing. The time and date of the real-time clock may be adjusted automatically, for example by receiving updates from a GPS unit via TSM interface **730**. The time and date of the real-time clock may be adjusted by receiving change requests from the service interface or user interface via UIM interface **720**. In one example, the real-time clock **714** may exhibit an accuracy of plus/minus 5 seconds per day at 25 degrees Celsius.

The CEM **700** may be mounted in or near the vehicle cab. For example, if the CEM **700** is packaged with a UIM, the CEM may be mounted in the cab near an operator. In other examples, the CEM may be mounted on an upper frame or part of the vehicle, for example within the vicinity of the TSM. For example, if the CEM is packaged with one or more components of the TSM, a higher mounting location may reduce interference for TSM modules, for example the GPS unit and/or UWB unit. The CEM may be packaged with the TSM in shorter vehicles for example. In some embodiments, it may be beneficial to package the CEM separately from the TSM. In one particular example, the CEM may be mounted directly below the TSM, were the TSM is disposed above or on the roof of the vehicle (see FIG. **8**) and the CEM is disposed below the roof of the vehicle, for example fixed to the inner ceiling of the vehicle. In this example, the CEM may be sheltered from direct exposure to sunlight and the components of the TSM may experience minimal interference and a clear line of sight.

The CEM **700** may interface (for example via a power supply interface **708**) with a power supply **760**. The power supply interface **708** may include a power conditioning system. In one example, all power for the VMM components and subcomponents passes through the power supply interface/conditioning system **708** located in the CEM, and then power for the other VMM components is routed out from the CEM. In other examples, one or more VMM components may include their own power conditioning systems and may accept power from a power supply without receiving power that is channeled through the CEM. The power supply may be the same as the vehicle's power supply, for example a 12 VDC or 24 VDC power supply. Alternatively or in addition, the VMM may include an independent power supply such as a battery, solar panels, and the like.

Referring again to FIG. **6**, VMM **600** may include a transponder sensor module (TSM) **604**. In some implementations of the VMM, one or more components of the TSM **604** may be packaged with the CEM **602**. In other implementations, it may be beneficial to package one or more TSM components separately from other VMM components, for example on an upper extremity of a vehicle. FIG. **8** depicts an illustration of side angled view of the upper portion **802** of an example rail line vehicle (for example a vehicle similar to the vehicle of FIG. **1**C) and a mounting configuration **804** for one or more components of a TSM, in accordance with one or more embodiments of the present disclosure. One or more TSM

components may be mounted at a high point (for example, the highest point) on the vehicle, where a clear line of sight may be established between the TSM components and an area to the front and rear of the vehicle.

In the example shown in FIG. **8**, the wireless communications antenna **806** (for example, similar to the wireless communications antenna **608** of FIG. **6**) and a UWB unit **808** (for example, similar to the UWB unit **620** included in the one or more vehicle communication devices **612** of FIG. **6**) may be mounted separately from other VMM enclosures. In this example, the wireless communications antenna **806** and UWB unit **808** may be mounted on the upper extremity **810** of the vehicle to reduce signal interference and to allow for proper antenna placement. It should be understood that FIG. **8** depicts only one example of TSM components that may be mounted on the upper extremity of a vehicle. More or less TSM components (or other VMM components) than are shown in FIG. **8** may be mounted on the upper extremity of a vehicle. For example, components that may be mounted on the upper extremity of a vehicle may include the UWB unit, wireless/RF antennas and/or radios, GPS units, infrared sensors and the like.

TSM components (and/or other VMM components) may be installed on the upper extremity of a vehicle by a variety of means. Referring to FIG. **8**, for example, a hole may be drilled through the side of an upper portion **802** of a vehicle or through the roof **810** to allow hardware to thread through the vehicle's upper portion **802** and also through VMM components to fix the components to the upper portion. Additionally, brackets, flanges, sockets or other hardware may be used to fix components to the upper portion **802**. For example, FIG. **8** shows a bracket **814** that may be used to fix a UWB unit to the upper portion **802**. The bracket **814** may be fixed to the upper portion **802** of a vehicle and the UWB unit may be fixed to the bracket. Brackets may aid in attaching components to the upper portion **802**, and/or they may elevate components so that the components experience increased line of sight and decreased interference. One or more holes may be drilled through the roof **810** or a side wall of upper portion **802** to allow the passage of interface cables (for example, cable(s) **812** of FIG. **8**) into and/or out of the cab of a vehicle.

FIG. **9** depicts an illustration of an example rail line vehicle **900**, including a VMM that includes more than one TSM, in accordance with one or more embodiments of the present disclosure. In some embodiments of the disclosure, the VMM in a rail line vehicle may include more than one TSM, or may include more than one group of TSM components mounted on the upper extremity of a vehicle. With regard to the disclosure herein, when a description explains the configuration and/or benefits of multiple TSMs, it should be understood that the entire TSM may not be duplicated. Instead, one or more components of the TSM may be duplicated, while there may be a single instance of other components of the TSM. For example, the VMM may include duplicated vehicle communication devices, such as two or more UWB units. Additionally, while the disclosure herein may describe two TSMs, some embodiments may include VMMs with more than two TSMs.

Referring to FIG. **9**, a VMM installed in a vehicle **900** may include two TSMs **902**, **904** (or two groups of some TSM components), for example mounted at either end of the vehicle **900**. As shown in the example of FIG. **9**, the two TSMs **902**, **904** may be mounted at the extreme (or near extreme) front and rear ends of the vehicle **900**. Placing sensors, for example sensors included in TSMs **902**, **904**, at the extreme ends of a vehicle may improve the accuracy of some sensors, for example sensors that measure distance between vehicles (such as UWB sensors or infrared sensors). Especially if the vehicle **900** is long, a distance sensor (for example a sensor included in TSM **904**) that is placed near the end of a vehicle may more accurately calibrate itself to determine the exact location of the end of the vehicle **900**, and thus the sensor may be able to determine more accurately the distance between the end of the vehicle **900** and other vehicles. The two TSMs **902**, **904** may be connected to a single CEM **906**, which may be connected to a single UIM **908**. In other embodiments, the VMM may include more than one CEM and/or more than one UIM.

When a VMM-equipped vehicle is initialized to operate with a CAS, the VMM components of the vehicle may be calibrated (also referred to as "commissioning" the vehicle) to the particular installation configuration for that vehicle. Calibration may include an operator specifying the vehicle length in each direction from the one or more mounted TSMs. Rail line vehicles (for example, maintenance vehicles) can range in length (see FIG. **1**), for example from 12 feet to 80 feet, and the vehicles can have a variety of cab locations and configurations. Given the different lengths and configurations of vehicles, it may be necessary to program information into various components of the VMM, including the TSM and/or the CEM, such that the components are aware of (and/or can compute) the distance between the component's mounting location and the ends of the vehicle.

In some embodiments of the disclosure, circuitry within the VMM (for example in the CEM) may automatically compensate (calibrate) for the length of the vehicle and the mounting location. In one example, the VMM may include a single TSM, and the TSM may be mounted on the vehicle (for example, at the front or center of the vehicle), and circuitry within the VMM (for example in the CEM) may automatically compensating for the length of the vehicle and the mounting location. In another example, the VMM may include multiple TSMs, and the TSMs may be mounted on the vehicle (for example, near the front and rear of the vehicle), and circuitry within the VMM (for example in the CEM) may automatically compensating for the length of the vehicle and the mounting location of the multiple VMMs. The sensors may be designed to adjust for the size of the equipment and specific location of the components. The present disclosure contemplates various methods and solutions to adjust settings of VMM's components at initial installation to aid in component awareness. Components may contain smart technology that aids in the component's calibration. The VMM components may also be operable to account for a length of a vehicle that may change on the fly. For example, some vehicles change length when retractable sections are extended. The VMM components may be designed to accommodate this change in length, either by manual user input or automatic detection of the vehicle configuration.

Referring again to FIG. **6**, the TSM **604** may include one or more vehicle communication devices **612**. It should be understood that throughout this disclosure, when reference is made to vehicle communication devices, there may only exist a single vehicle communication device, for example just a UWB unit. In other examples, there may be more than one vehicle communication device. Vehicle communication devices **612** may be packaged together, or they may be packaged independently, or they may be packaged with other TSM components. The vehicle communication devices **612** may be in close communication with the CEM **602** via either a wired connection or a short range wireless connection. One benefit of a wired connection is that the CEM, which may contain a power conditioner unit and an interface to a power supply, can

provide power to the vehicle communication devices, along with communication functions.

The vehicle communication devices **612** may communicate wirelessly with other CAS/VMM-vehicles **638** in the work gang. The vehicle communication devices **612** may be operable to, among other functions, determine the relative location of other CAS/VMM-equipped vehicles in relation to the present vehicle. The vehicle communication devices **612** may utilize one or more communication technologies and may include one or more integrated antennas for sending and receiving signals to and from other vehicles. In one example, each vehicle may have a unique identification code that was assigned when the VMM was installed in the vehicle, or before or after such installation.

In some embodiments of the present disclosure, the vehicle communication devices **612** may include an Ultra Wideband (UWB) unit **620** to communicate with other VMMs. In one specific example, the UWB unit **620** is the only vehicle communication device. The UWB unit may include a control board, a data interface and/or a UWB antenna. The UWB unit **620** is typically adapted for sending signals to and/or receiving signals from UWB units mounted on/inside other vehicles. The UWB unit **620** may be adapted to measure the relative separation distance between properly equipped vehicles without becoming confused by interference from nearby stationary or unrelated off-track equipment that might otherwise cause false alarms in radar-based collision avoidance systems.

FIG. **10** depicts a block diagram illustrating example UWB units, in accordance with one or more embodiments of the present disclosure. Pulses emitted from a UWB transmitter may spread in many directions. A UWB unit may transmit and receive pulses that are communicated directly **1002** between UWB units (for example between a UWB transmitter/transceiver **1008** and a UWB receiver/transceiver **1006**), and/or the UWB unit may transmit and receive pulses that have been reflected **1004** (bounced) off of an object and/or surface, for example the ground. A UWB unit may be capable of resolving multipath reflections from a main signal by focusing on the first arriving pulse. Additionally, the UWB technology may take advantage of the fact that radio waves/pulses travel at a particular velocity. By measuring how long it takes a wave/pulse to travel (for example by reflecting/bouncing) between two transceivers, the distance between the UWB units can be accurately determined. This technique may be referred to as "Time of Flight" (TOF). In existing wireless radio technologies, TOF calculations have previously had limitations due to the reflection of radio waves from the wide range of objects in the vicinity. These reflections may result in the receipt of numerous conflicting signals of varying amplitudes, and in some instances one or more signals may cancel each other out, a phenomena referred to as "multi-path distortion". This may result in inaccurate distance determinations because a direct wave may have been cancelled out, and a reflected wave may travel a longer path and appear to be the first arriving pulse, resulting in a false (longer than actual) separation distance measurement.

A UWB unit may utilize a high bandwidth pulsed distance-measurement technology. A UWB transceiver may utilize a broad spectrum of frequencies simultaneously at a relatively low power levels. A UWB unit may be operable to periodically transmit short duration pulses, such as RF pulses. For example, a UWB unit may measure a distance of several hundred feet with a resolution of several inches. Precise range determination may be advantageous, for example when vehicle separations are small and/or when a potential GPS measurement error becomes significant. In one example, a GPS measurement error may be 10-15 feet. Additionally, each pulse transmitted by a UWB unit may be coded and the phase of the pulse may be modulated and the pulse repetition rate may be variable. Thus, a UWB unit may measure separation distances more accurately and be less susceptible to interference from geographic conditions and less susceptible to multi-path distortion than are other wireless technologies.

A UWB unit may transmit one or more signals that may be pseudo-randomly (and uniquely) encoded with low-amplitude RF energy spread over a 2 GHz bandwidth. The transmitted signal may be spread out over such a wide range of frequencies that the transmissions appear like normal background atmospheric noise. As a result, the signal is unlikely to cause interference with other communications systems. This encoding also means that information may be transmitted with the range finding signal, such that data communication may be accomplished while distance measurement is performed. In other words, the UWB unit may be adapted to transmit data to other UWB units in addition to detecting the distance to other UWB units. In effect, the two functions (data and distance) may be performed at the same time using the same wireless link because the UWB unit may transmit data, and then additionally, distance information may be computed by determine how long it took for the data to travel from one UWB unit to the other. It should be understood, however, that the two functions (data and distance) need not be performed at the same time.

The UWB unit may be adapted to send data as well as determine distance between vehicles. Because the UWB unit may be utilized to send data, some embodiments of the present disclosure, for example those where a central tracking component resides in the vehicle mounted module, may not need to use any other type of wireless or RF technology to communicate. This could reduce the technology components required in the system, reducing cost of the system. However, in other embodiments, a VMM may benefit by utilizing more than one data link (wireless technology capable of transmitting data). For example, a wireless RF link may provide a greater distance/range for sending data than a UWB unit, and because of this benefit and potentially other benefits of various types of data links/wireless technologies, a VMM may benefit by utilizing more than one type of data link. Additionally, a collision avoidance system may have multiple data links in order to introduce redundancy into the system. For example, the UWB unit may be capable of sending data if the RF link is not functioning properly, and vice versa.

One example of a UWB technology that the CAS may utilize is the technology described in the White Paper published by Time Domain entitled "Time Domain's Ultra Wideband (UWB): Definition and Advantages," which is incorporated by reference in its entirety herein. However, it should be understood that the collision avoidance system may utilize other designs and types of UWB technologies besides just the one described in the White Paper.

The UWB unit may be operable to measuring the vehicle separation independently. Thus, in various embodiments of the CAS, the UWB unit may replace the GPS unit, or the UWB unit may work in conjunction with the GPS unit. As explained above, the CAS may be designed to include redundancy in the system, for example in the form of multiple types of sensor technologies and/or multiple sensors of a particular type of technology. One benefit of utilizing redundant sensors may be that some sensors may function properly when other sensors are not functioning optimally or at all. For example, a GPS sensor may not communicate well with satellites when a vehicle is in a tunnel, and thus the GPS unit may not provide adequate information to the CAS in this situation. However,

in this situation, the UWB unit (or other sensors/technologies) may be fully functional. For example, tests have been performed in tunnels that stretch up to 1 mile in length (or longer), and the tests have shown that a properly configured UWB unit may accurately measure distance and relative speed of vehicles in such a tunnel. UWB sensors (and/or other non-GPS type sensors) may also work in conjunction with a GPS sensor. For example, a UWB sensor may provide better resolution (i.e., can measure separation distance at finer increments, more accurately) and the GPS sensor may provide a location/separation information over a greater area.

Referring again to FIG. **6**, once a UWB unit determines distance information, it may communicate this data to a CTU **630**, for example via wireless communications antenna **608**. Wireless communications antenna **608** may be an RF antenna, for example a 2.4 GHz radio antenna. In other embodiments, where there is no CTU in a discrete housing, UWB distance data (an optionally other data) may be communicated to CTU modules in other VMMs via wireless communications antenna **608** and/or a separate wireless communications antenna located in the TSM **604**. In embodiments where the UWB unit is adapted to operate in conjunction with a GPS unit, combined GPS and UWB distance data may be communicated between a vehicle and the CTU **630** and/or between vehicles in the work group via similar wireless communications antennas/technologies as described herein.

FIG. **11** depicts and illustration of a side view of an example rail line vehicle including multiple UWB units (or multiple UWB components), in accordance with one or more embodiments of the present disclosure. In some embodiments, a VMM installed on a vehicle **1102** may include more than one UWB unit (for example, UWB units **1104**, **1106**), for example to introduce redundancy into the system. In some embodiments, a VMM installed on a vehicle **1102** may include more than one UWB antenna, and the multiple UWB antennas may share a common control board and/or data interface. When present disclosure describes multiple UWB units, it should be understood that the entire UWB unit may be duplicated or one or more components of the UWB unit may be duplicated, for example the UWB antenna. In some embodiments, multiple UWB units (or multiple UWB components) may be housed in a single enclosure. In other embodiments, multiple UWB units (or multiple UWB components) may be housed in separate enclosures, as depicted in FIG. **11**.

In some situations, when a UWB pulse is reflected from an object or a surface (for example the ground), the UWB pulse may be destroyed (for example, by a reflected signal which is the same amplitude but **180** degrees out of phase) or altered before it gets to the UWB receiver, and/or other interference may cancel out a pulse. These situations where a UWB link might not transmit a pulse ideally may be referred to as "holes." In some embodiments, the VMMs may include more than one UWB unit (or UWB component), for example in case one UWB pulse is destroyed. In some examples, two UWB units (or two UWB antennas) may be mounted on a single vehicle with a small offset between the UWB antennas. For example, referring to FIG. **11**, two UWB units (or two UWB antennas) **1104**, **1106** may be mounted on a single vehicle **1102** with a small vertical distance **1108** between the UWB antennas. In this example, pulses **1110**, **1112** from the two UWB units **1104**, **1106** (respectively) may arrive at a UWB receiver of another vehicle after traveling slightly different distances (for example, because they reflected off the ground at different angles). Multiple/redundant UWB units may increase the probability that whatever surface and/or interference destroyed or altered one UWB pulse will not interfere with the second UWB pulse. In some examples, two UWB units (or two UWB antennas) may be mounted on a single vehicle with a small horizontal distance between the UWB antennas. The horizontal offset may provide information to the VMM to determine the orientation of nearby vehicles in relation to the immediate vehicle. For example, UWB unit information may show that a nearby/target vehicle that is in front of the immediate vehicle is closer to a front UWB antenna, and likewise for a rear vehicle/rear UWB antenna.

In some embodiments, one or more UWB units may be operable to transmit/receive signals with varying center frequencies. This multiple center frequency technique may work with a single UWB unit or it may work with multiple UWB units. In a single UWB unit example, the UWB controller may utilize adaptive output filters. The UWB unit may include a single UWB transceiver that is adapted to send multiple pulses/signals with different center frequencies at different times, for example alternating between modes (center frequencies). A corresponding UWB receiving unit may be synchronized with the UWB unit sending the signals, in that it may receive pulses/signals with different center frequencies at different times. In a multiple UWB unit example, one UWB unit may send signals at one center frequency and another UWB unit may send signals at a different center frequency. Variations in the center frequency of the UWB signals may result in a different phase delays of the signals, for example when reflected. If one signal has been significantly altered or destroyed by a reflection, another signal(s) (which utilizes a different center frequency) may be unaffected, or at least less affected, by the reflection. This may be because different frequency signal(s) over the same reflection path length may experience a different phase delay. This approach may improve the reliability of UWB communications under certain operating conditions.

Referring to FIG. **6**, in some embodiments, the vehicle communication devices **612** may include other wireless communication devices/technologies (beyond or in replacement of a UWB unit) to communicate with other VMMs. In some embodiments, a VMM may utilize a wireless communications antenna/radio (for example, an RF antenna/radio) to communicate with other VMMs. In some embodiments, the same wireless communications antenna **608** that communicates with a CTU **630** may communicate with other VMMs. In some embodiments, the vehicle communication devices **612** may include an ultrasonic or short distance laser device. Some example ultrasonic or short distance laser devices can sense distances between zero and thirty feet. In yet other examples, the vehicle communication devices may utilize radar, infrared (IR), and/or optics technologies.

Referring again to FIG. **6**, a TSM may include a Global Positioning System (GPS) unit **610**. The GPS unit **610** may be incorporated to the TSM. In some embodiments, the GPS unit **610** may be packaged with one or more vehicle communication devices **612**, or it may be packaged in the CEM. Alternatively, the GPS unit **610** may be housed separately or may be incorporated into other VMM components or subcomponents. The GPS unit may include either an integrated or separate antenna assembly.

The GPS unit **610** may be adapted to determine the absolute position and speed of a vehicle that is equipped with the GPS unit. Information/data generated by a GPS unit may allow real-time determination of vehicle velocity and location. This information/data may allow a GPS unit **610** to determine expected vehicle stopping distances and may enable logging of equipment location with respect to time and

date. For example, absolute location information provided by a GPS unit **610** may be useful to track the work performed by a work gang. A GPS unit may also provide distance information regarding the distance between two GPS-equipped vehicles.

Some GPS-based systems may experience reduced accuracy at times or may lose all connection with satellites, for example, when a vehicle enters a deep valley or a tunnel. A GPS unit may provide distance information in conjunction with other technologies that provide distance information (for example, UWB, infrared) as a form of redundancy and/or to offer a variety of distance measurement ranges and precision. A GPS unit may be operable to determine vehicle position within a wider range, for example 10 to 15 feet. A GPS unit may allow for the determination of distances between vehicles that are too far apart for other types of distance detection technologies to function accurately. Then, other technologies, for example a UWB unit, may provide a more precise distance measurement, for example a distance within 6 inches. The accuracy of a GPS unit **610** may be enhanced by utilizing a WAAS (Wide Area Augmentation System), a system of ground reference stations across North America that provide GPS signal corrections. Corrections provided by a WAAS may improve the positioning capability of the GPS unit **610**, for example by a factor of five, such that the location may be determined as accurately as within 2 to 3 feet.

Referring to FIG. **6**, the VMM may include one or more user interface modules (UIM) **606**. A UIM **606** may further include a user interface **614**, a service interface **616** (optionally with diagnostic components/interfaces) and status/fault indicators **618**. A UIM **606** may provide an operator with an interface by which the operator can engage with the technologies that are part of the VMM, and by which the operator may be alerted of events, for example if vehicle separation criteria are violated. A UIM may be located/mounted within convenient reach and view of the operator, and may be connected by an interface cable (or short range wireless connection) to other VMM modules, for example the CEM. For example, the UIM may be mounted in a vehicle cab in order to allow the operator to see and hear warning and alarm indications.

Status/fault indicators **618** may alert an operator that one or more VMM components and/or subcomponents are not operating in an optimal manner. In some embodiments of the present disclosure, the VMM components may be operable to "self-monitor," meaning they may be adapted to monitor their own operation and health. If a VMM detects degraded or non-optimal performance (for example regarding any of the sensors or other VMM components or subcomponents), the status/fault indicators **618** may alert an operator. In some embodiments, the VMM may communicate status/fault indication to the CTU (or CTU module(s), for example via a wireless communications antenna, for example wireless communications antenna **608**.

FIGS. **12**A and **12**B depict illustrations of example user interfaces, in accordance with one or more embodiments of the present disclosure. The UIM may include a user interface. Referring to FIGS. **12**A and **12**B, it can be seen that a user interface (for example user interfaces **1202**, **1204**) may include one or more means of alerting an operator of events, for example if vehicle separation criteria are violated. FIG. **12**A shows one example of a user interface **1202**. In this example, the user interface **1202** may include one or more visual indicators **1206**, one or more audible indicators **1208**, one or more switches/buttons **1210**, **1212**, **1214**, and/or other input means or alerting means. Examples of visual indicators **1206** are lights, lamps, alpha-numeric character displays, LED's and the like. These indicators may provide an operator with information regarding the technologies included in the VMM, and certain indicators may alert the operator when an event occurs, for example when separation parameters (between vehicles for example) are exceeded. Examples of audible indicators **1208** are variable characteristic audible indicators, buzzers, alarms, sirens, horns and the like. The user interface **1202** may include one or more interface switches/buttons **1210**, **1212**, **1214** that may be adapted to allow an operator to configure and/or interact with components of the VMM. For example switches may be adapted to activate and deactivate component interfaces, for example component interfaces in the CEM. In one example, (and referring to FIG. **7**), an operator may use a switch to deactivate the interface **706** to an encoder module. Examples of other input switches/buttons are buttons that acknowledge (temporary mute) a buzzer, alarm or a horn.

FIG. **12**B shows another example of a user interface **1204**. The user interface **1204** may be a touchscreen, tablet, PDA, monitor or other type of digital display/interface. Even though some descriptions of user interface **1204** may refer to it as a touchscreen, it should be understood that other alternatives mentioned and others may be contemplated. In some embodiments, a touchscreen may be implemented in conjunction with other types of user interfaces or user interface components, for example the components of user interface **1202**. In some embodiments, a touchscreen may be adapted to serve as the only user interface component that interfaces with the operator. In some embodiments (and referring to FIG. **6**), if a touchscreen is used to implement the user interface **614**, other components of the UIM (for example the service interface **616** and/or the status/fault indicators **618**) may be incorporated into the same touchscreen.

User interface/touchscreen **1204** may offer more flexibility and functionality than "hard" switches, lights, buzzers and the like. For example, a touchscreen may include on or more physical buttons (for example button **1218**), but may also allow an operator to engage "soft"/temporary buttons on the screen **1216** of the touchscreen. In this respect, the touchscreen may offer similar functionality to hard switches/buttons. Additionally, a touchscreen may include one or more speakers and/or audio drivers, and thus the touchscreen may offer similar functionality to hard buzzers, alarms and the like. The screen **1216** of the touchscreen **1204** may also alert an operator to an event, offering similar functionally to hard lights, lamps and the like.

A touchscreen **1204** may be adapted (i.e., programmed, etc.) to display to an operator multiple sets of screens and/or menus, with multiple sets of options, functions and the like. Additionally, a touchscreen may be adapted to display complex (for example, graphical, textual, etc.) information to an operator. For example, a touchscreen may show the operator the speed of his vehicle, or may show operator his GPS coordinates. A touchscreen **1204** may be adapted (i.e., programmed, etc.) to offer additional functionality, for example allowing operators to send messages (for example text-based or html-based message) to nearby vehicles. In some embodiments, a touchscreen may provide a GPS-augmentation feature, for example, which may adapt the touchscreen to display the location of the vehicle relative to railroad mile markers.

It should be understood that the components and/or functionalities of user interfaces **1202** and **1204** may be incorporated into or implemented in one or more physical housings and/or devices. These components may be incorporated into discrete enclosure(s) (for example mounted near an operator/cab) and/or they may be incorporated into VMM components. In some embodiments, the user interface (for example, interfaces **1202** and/or **1204**) may be mounted alongside or in the

same enclosure as the CEM **1230** or it may be mounted in a separate enclosure. For example, the user interface may be located in the passenger cab and the CEM may be located on an upper internal extremity of the vehicle. This flexible mounting arrangement may help to accommodate a wide range of equipment/vehicles that the CAS may need to track by allowing the user interface to be mounted where it is visible and accessible to the equipment operator while allowing the CEM to be mounted in close proximity to the TSM, which may improve performance, for example by allowing better reception.

The user interface (for example user interfaces **1202** and/or **1204**) may be in communication with the CEM **1230**, and/or other VMM modules. The user interface may communicate with the CEM, for example, via either a wired interface or a short range wireless connection. One benefit of a wired connection is that the CEM, may contain a power supply interface and/or a power conditioner unit and may be able to provide power to the user interfaces, along with communication functions.

Referring to FIG. **6**, the UIM **606** may include a service interface **616** that provides for installation, configuration, maintenance and/or diagnostic activities. The service interface **616** may be incorporated as part of the user interface, or it may be housed separately. In some embodiments, the service interface **616** may be located in the CEM **602**. The service interface **616** may also be used to initialize the vehicle mounted module. In other embodiments, the user interface **614** may be used to initialize the vehicle mounted module. For example, the CEM may include a setup program that initializes the various VMM components and subcomponents. An operator may use the user interface **614** or the service interface **616** to input initialization information into the setup program. Such information may include the physical location where various VMM components are mounted on the vehicle, as well as vehicle size and vehicle type. This information may be input when the vehicle mounted module is initially installed on the vehicle.

The service interface **616** may include a variety of technologies that may enable fast and easy communication between an operator and the service interface, and between the service interface and other VMM components and subcomponents. For example, service interface **616** may include one or more USB ports, Ethernet ports, and/or SD memory card slots. Service interface **616** may be configured, for example, with an industry standard Ethernet port to allow the use of commercially available laptop computers that may interface with service interface **616**, for example to perform status inquiries, to configure settings of VMM components, and/or to update the software/firmware of VMM components. Ethernet ports generally will conform to the IEEE 802.3 communication standard for 10BASE-T Ethernet (or alternatively 100BASE-T). In addition to Ethernet ports, or in conjunction with Ethernet ports, the service interface **616** may be configured with an 8-position RJ45 modular jack for interconnection. The service interface **616** may also operate as a DHCP server, thus allowing an operator to connect a laptop to the Ethernet port and within a few seconds be automatically configured and communicating with the VMM **600**. Alternatively, the service interface **616** may require a static IP address setting to be configured on the laptop. In such a configuration, the service interface may conform to the Internet Protocol Version 4 (IPv4). In some examples, the service interface connectors, such as the Ethernet connectors and the RJ45 connectors, may include environmental dust shields for protection.

In some embodiments, service interface **616** may include wireless capabilities. For example, service interface **616** may include a wireless radio (for example an RF radio), WIFI components and/or other wireless technology. A service interface **616** with wireless capabilities may be adapted to accept "field updates." Field updates refer to updates to the software and/or firmware of VMM modules that are "pushed" to the modules over a wireless link. In one example, a foreman may drive up to a group of vehicles and may push updates to all the vehicles simultaneously, for example without having to physically connect to the vehicles. Alternatively or in addition, wireless communications antenna **608** (and/or other wireless communication antenna(s)) may be used to perform field updates.

In one or more embodiments of the present disclosure, the VMM may include (or may interface with) one or more non-GPS type sensors. These non-GPS type sensors may be adapted to measure speed (also referred to as ground speed) and direction of a rail vehicle. A GPS unit may provide speed and direction information, but in some embodiments and/or in some situations, the non-GPS type sensors may either supplement or replace GPS speed and direction information. For example, non-GPS type sensors may supplement a GPS sensor as a form of redundancy in the system, or may provide speed and direction information when the GPS unit cannot communicate with satellites (for example, when a vehicle is inside a tunnel). Additionally, these non-GPS type sensors may allow the CAS to determine relative vehicle position. For example, the non-GPS type sensors may calculate relative vehicle position as a function of the offset from the last known GPS location.

One type of non-GPS type sensor is an encoder module. An encoder module may be adapted to measure ground speed and direction of a rail line vehicle. The encoder module may supplement the UWB technology or replace the UWB technology, for example as a method of providing more precise "dead reckoning" data to the CAS, helping to overcome the "dead reckoning" limitations of earlier systems. In one embodiment, the encoder module may include a small rubber wheel which contacts the top of a rail on which the vehicle travels. The encoder module may be mounted on an adjustable preloaded assembly which maintains contact with the rail. A magnetic rotary encoder may count the rotations of the wheel. In one example, an encoder module may use a small integrated Hall-ASIC to determine the rotational speed of the wheel. This wheel rotation information may be translated into distance information which may be communicated to a CEM either through a wired or wireless connection.

The encoder module may be adapted to allow the encoder assembly be manually or automatically raised from the tracks for maintenance or lifting of the vehicle from the tracks. The encoder module may also include auto calibration features. For example, as the encoder wheel turns, it may utilize GPS data, when it is available, to review the last distance traveled, and compare that with the number of rotations of the wheel. This information can be constantly updated and used to compensate for wheel wear and or track slippage. Referring to FIG. **7**, a CEM **700** may include one or more interfaces such that a VMM may communicate with one or more non-GPS type sensors. An encoder module, for example, may be in communication with a CEM, typically connected to a module interface. As an example, FIG. **7** depicts an encoder module **750** connecting to a CEM **700** via an interface **706**.

Another type of non-GPS type sensor that may be in communication with a VMM is microwave radar, for example a Doppler radar. A microwave radar may be adapted to measure ground speed and direction of a rail vehicle. In one example,

a microwave radar may be mounted on a rail line vehicle and may be oriented to point at the ground to detect ground speed and direction of travel. A microwave radar, for example, may be in communication with a CEM, typically connected to a module interface. As an example, FIG. **7** depicts a microwave radar **752** connecting to a CEM **700** via an interface **706**.

Another type of non-GPS type sensor that may be in communication with a VMM is a laser device. A laser device may be adapted to measure ground speed and direction of a rail vehicle. In one example, laser device may be mounted on a rail line vehicle and may be oriented to point at the ground. A laser device may bounce a signal off of the ground (or other stationary object) to detect ground speed and direction of travel. A laser device, for example, may be in communication with a CEM, typically connected to a module interface. As an example, FIG. **7** depicts a laser device **754** connecting to a CEM **700** via an interface **706**.

Other types of non-GPS sensors that may be used in conjunction with the GPS sensor to detect ground speed and direction of travel include infrared sensors, UWB sensors as described herein, UWB radar sensors, and other types of radar sensors. These non-GPS type sensors may add redundancy to the GPS sensor, or they may provide information when GPS information is temporarily unavailable. One or more parts of one or more of the non-GPS type sensors may be packaged in the same enclosure as other VMM modules, or they may be packaged separately.

In operation, the CAS may be capable of precisely tracking the location and separation distances of vehicles equipped with appropriate equipment and/or components as described herein. When the CAS is tracking vehicles, a particular work gang may be operating in one of two modes for example—travel mode or work mode. For each mode, railroad companies may require that a specific spacing be maintained between vehicles. In work mode, the vehicles may be traveling at a speed of less than 10 MPH, and about 40 to 50 feet of spacing between vehicles may be required. In travel mode, the vehicles may be traveling at speeds of up to around 25 MPH, and about 300 feet to about 500 feet of spacing between vehicles may be required. Depending on the mode in which the vehicles are operating, the CAS may adjust its sensitivity and/or settings in order to better predict when collisions may be imminent.

For the CAS to operate optimally, each vehicle in a work gang may need to be equipped with a VMM. The VMMs mounted on/in the vehicles and the CTU may only be able to detect vehicles which are outfitted with a VMM. In one embodiment of the present disclosure, the CAS requires that every vehicle in a work gang be equipped with a VMM. If all vehicles in a work gang are equipped with a VMM, the CAS may be adapted to eliminate false warnings which plague existing systems, such as radar-based systems.

FIG. **13** depicts a flow diagram **1300** that shows exemplary steps in the operation of a CAS, in accordance with one or more embodiments of the present disclosure. To explain the operation of a particular vehicle/VMM, the immediate vehicle/VMM may be referred to as the "host" and nearby vehicles/VMMs with which the host links/communicates may be referred to as "targets". It should be understood that when the functionality of a host in relation to targets is explained, each target may also act as a host for the purposes of explaining how that target vehicle operates in relation to nearby vehicles.

Referring to FIG. **13**, at step **1302**, the host vehicle/VMM is powered up. This may be referred to as the initial start-up. The VMM may begin to operate whenever a vehicle's systems are powered up. At step **1304**, within a few seconds of initial startup, the host VMM may begin to automatically detect the existence of other vehicles/VMMs in the vicinity. For example, the host VMM may automatically activate one or more vehicle communication devices to search for/link with other vehicles (targets) both in front of the host vehicle and/or behind the host vehicle. The host may survey its surroundings to determine if there is any other VMM-type equipment nearby. At step **1306**, the host may determine which discovered targets, both in front and in back, are the closest and may sense/measure the actual separation distance between the closest target in front and the closest target in the back. In some embodiments, the host may sense and compute distances for vehicles beyond just the vehicles immediately to the front and back of the host. At step **1308**, the host VMM may continuously sense/calculate distances between the host vehicle and the target vehicles. In some embodiments, the host may sense and compute distances for vehicles beyond just the vehicles immediately to the front and back of the host.

At step **1310**, the host (and perhaps other target vehicles) may transmit location and speed information to the CTU, for example through the radio antenna. Additionally or alternatively, the host VMM may transmit (and/or receive) location and speed information, for example through one or more vehicle communication devices, to target vehicles/VMMs. At step **1312**, the CTU and/or CTU module inside the host VMM may calculate information, for example absolute and relative location of the vehicles in the work gang, speed and direction of vehicles, separation distances and/or safe distance violations. At step **1314**, if the CTU and/or host VMM determines that collision is imminent or prescribed safe distances are violated, the host VMM, for example via a user interface, may notify the operator. For example, if the speed and direction information violates preset separation criteria, one or more warning indicators and/or audible buzzers, alarms and the like will activate. Additionally, the host VMM may communicate the violation to the CTU, perhaps through the radio antenna. At step **1316**, if the separation violation has been resolved, for example by the movement of vehicles away from each other, the warning/notification indicator to the operator may silence, and the host may resume monitoring for other potential violations by continuously sensing nearby vehicles and computing separation distances (return to step **1308**).

FIG. **14** depicts a flow diagram **1400** that shows exemplary steps in the operation of a CAS, in accordance with one or more embodiments of the present disclosure. Specifically, flow diagram **1400** shows exemplary steps illustrating how a CAS may determine distances between vehicles. Each vehicle in a work gang may include a GPS unit as well as other sensor technologies such as UWB sensors.

At step **1402**, a host may utilize its GPS unit to determine its absolute location and speed (and perhaps direction of travel). At step **1404**, the host may determine that it would benefit from information from other non-GPS type sensors. For example, one or more vehicles in the work gang may become unable to utilize the vehicle's GPS unit. Vehicles may travel through tunnels, mountains and developed areas that include structures that may prevent or reduce the functionality of GPS-based technologies, resulting in the GPS signal being lost (the "dead reckoning" situation). In these types of situations, the host may determine that other types of sensors included in (or in communication with) the VMM may aid in determining the precise location of vehicles. Even if the GPS signal is not lost, these other types of sensors may be used to enhance the precision of the location information gathered with respect to a vehicle. At step **1406**, the host may utilize non-GPS sensors to determine relative location and speed

information. The host may utilize one or more vehicle communication devices. For example, the UWB unit may determine separation distance and closing speed. The host may utilize components connected to the VMM via component interfaces. For example, a Doppler radar or encoder wheel may determine ground speed and direction of travel.

At step **1408**, the host VMM and/or the CTU may compute separation distances between the host and other vehicles. For example, the microprocessor in the CEM (a component of the VMM) may compute the separation distance between the host and adjacent vehicles. In one illustrative example, a maintenance vehicle (the host) is 40 feet long, and a TSM is installed 10 feet behind the front of the vehicle. Another maintenance vehicle (the target) is also 40 feet long, and a TSM is installed 30 forward from the back of the vehicle. If there is 50 feet between the front of the host vehicle and the rear of the target vehicle, the CAS will measure a distance between the TSMs of 90 feet (10 feet+50 feet+30 feet). The CAS may then perform calculations to compensate for the placement of the TSMs relative to the front and rear of the vehicles. For example, the CAS will subtract 10 feet and 30 feet (the respective distances between the each TSM and the relevant ends of the vehicle) and determine a separation distance of 50 feet (90 feet−10 feet−30 feet).

At step **1410**, the host VMM and/or the CTU may compare computed separation distances to prescribed (safe) separation distances for the given vehicle speed/size. At step **1412**, the host VMM and/or the CTU may determine whether a collision is imminent and whether an operator must be cautioned. The CAS may consider a variety of types of data and scenarios to determine if a collision is imminent. For example, a separation distance of 40 feet may be acceptable when vehicles are traveling at 5 miles per hour, but if the vehicles are traveling at 20 miles per hour, an unsafe condition may exists and the operator will be notified with an audible and visual alert. In another example, a vehicle that is far ahead may not pose a hazard, but one that is directly ahead, and moving slower than the host vehicle may be a potential collision hazard. In another example, two vehicles may have been creeping along the tracks at a separation distance of 100 feet, and then the vehicles speed up to reach another worksite. If the separation distance does not increase with the increase in speed, the CAS may sound a warning or alarm.

Using various combinations of technologies (UWB, encoder modules, radar, etc.), the CAS can monitor the precise relative location and speed of the vehicles in a work gang, and determine whether a predetermined separation distance has been violated. The CAS may notify, caution, and/or alarm vehicle operators and/or other railroad personnel (via audible and/or visual indicators) when the separation distances between rail line vehicles becomes less than a specified safe distance, which may indicated that a vehicle is approaching another vehicle and is within a separation distance which may not be safe. The specified safe distance may be programmed by trained service technicians.

Instead of sounding a "hard" alarm through visual and audible alarms when a separation distance is violated, the CAS may utilize a "progressive" warning approach. In general, as the relative spacing between potential alarm events decreases, the collision avoidance system may increase the severity of the warning indication. For example, if a vehicle is on a collision course but has not yet reached a hard threshold, the collision avoidance system may initiate a "soft" alarm/notification initially, such as a short, quiet, visible-only or subdued alarm. The rate, frequency, prominence and/or severity of the alarm may then increase as the vehicles get closer to the hard alarm threshold (indicating a more critical threat condition).

The CAS may adjust its thresholds according to the speed of one or more vehicles. This feature may be referred to as an "adaptive threshold" feature. The adaptive threshold feature may allow for scaling of thresholds of the alarm/notification levels based upon the speed of the immediate vehicle and the relative speed of the immediate vehicle and a vehicle that may collide with the immediate vehicle. For example, when vehicles are traveling to a worksite, at a speed of about 25 miles per hour for example, the expected separation distance may be about 300 to about 500 feet. In a scenario where a vehicle is at a worksite, moving slowly, the expected separation distance may be smaller, for example about 40 to 50 feet. The relative vehicle speed determines how long we have to respond to the issue, and our vehicle speed determines how long the stopping distance will be, which is non-linear.

The CAS may also include an option, mode or switch whereby an operator or a railroad foreman can temporarily deactivate/silence (for example via a user interface) the separation warning/notification features of one or more vehicles. Once silenced, a warning/notification may not repeat until the vehicle separation has again exceeded prescribed safe distances, or, for example, the warning/notification may sound again after a defined period of time if the separation distance violation has not been improved. This silencing feature may allow for periodic, sanctioned violations of prescribed separation distances without alarms, buzzers and the like becoming a nuisance to the operators. An operator may simply acknowledge that the violation of the separation distance was deliberate and the notification may not repeat, until another violation occurs for example. If the violation is not acknowledged, the notification/alarm may repeat periodically.

In some situations, for example, a vehicle operator may be asked by his foreman to temporarily violate the prescribed work separation distances, such as when vehicles come together for a meeting. In this situation, vehicles will slowly approach other vehicles and stop close to other vehicles, so that the work gang may be in a tight group. The operators can then dismount and walk a short distance for a meeting. The collision avoidance system may be designed to accommodate this tight-group situation without needlessly activating alarms, annoying railroad personnel and causing nuisance false alarms, for example by detecting very slow-speed approaches. In some examples, a deactivation may require an operator or a foreman to use a key, code, password or the like to gain authorization to deactivate the warning features. This will prevent an accidental or unauthorized deactivation that may lead to an accident where no warning was sounded. In other examples, the collision avoidance system may automatically reactivate the separation warning features after a certain amount of time, or when the vehicles separate a certain distance (or satisfy a certain distance/speed ratio), so that the system remains in an active tracking and warning mode when the vehicles are working or traveling.

FIG. **15** depicts a flow diagram **1500** that shows exemplary steps in the operation of a CAS, in accordance with one or more embodiments of the present disclosure. Specifically, flow diagram **1500** shows exemplary steps in the operation of a progressive/graduated warning system. In some embodiments, the CAS may utilize a progressive/graduated warning approach that utilizes classes of warnings and/or notifications. The CAS may start by initiating one class of warning, and then escalate to a more severe class of warning if certain distance/speed measurements violate certain thresholds. Separation distances for progressive/graduated thresholds

may be based upon vehicle stopping distance test results as explained elsewhere herein. With regard to the following descriptions, it should be understood that a reference to the CAS or the VMM or the CTU performing a calculation, making a determination, generating a warning/alarm, or other events may actually be performed and/or generated by one or more components within the CAS, VMM and/or CTU.

At step **1502**, the CAS system may determine that a certain distance/speed measurements violate one or more certain preliminary thresholds. At step **1504**, the CAS generates a first class of warning. In one example, the first class of warning may be labeled as a "notification." In certain situations, it may not be dangerous to violate preliminary thresholds (for example, in the case of work vehicles congregating for a meeting), and thus notifications may be designed to allow operators to ignore/silence them. At step **1506**, the CAS may accept input from an operator regarding whether the operator wants to silence the notification. For example, an operator could indicate an "acknowledge" choice via a button, touch screen or the like. At step **1508**, if the operator chooses to silence/acknowledge the notification, this may silence the notification once, at least until a violation that leads to a notification reoccurs. Notifications may be auto ignored in certain situations, for example, if vehicles are moving very slowly. Notifications may be less prominent than other classes of warnings. For example, notifications may display on a screen on the user interface, and may initiate a short sound, without being too annoying or distracting to the operator.

At step **1510**, the CAS system may determine that a certain distance/speed measurements violate certain intermediate thresholds, thresholds that the CAS system has determined present a higher risk of collision. At step **1512**, the CAS may generate a second class of warning. In one example, the second class of warning may be labeled as a "caution" warning. In certain situations, it may not be dangerous to violate these intermediate thresholds, at least momentarily, and thus notifications may be designed to allow operators to ignore/silence them momentarily. At step **1514**, the CAS may accept input from an operator regarding whether the operator wants to silence the caution. At step **1516**, silenced caution warnings may reinitiate quickly if silenced, unless the situation that led to the caution warning is remedied. Caution warnings may be more prominent than notifications but may be less prominent than other more severe classes of warnings. For example, caution warnings may display on a screen on the user interface in a more prominent manner than notifications, such as by blinking, taking up more of the user interface screen, etc. Caution warnings may initiate a louder sound than notifications, but may be designed to avoid being too annoying or distracting to the operator.

At step **1518**, the CAS system may determine that certain distance/speed measurements violate certain critical thresholds, thresholds that the CAS system has determined present a high risk of collision and require immediate correction. At step **1520**, the CAS may generate a third class of warning. In one example, the third class of warning may be labeled as an "alarm" warning. In certain situations, it may be dangerous to violate these critical thresholds, and thus alarms may be designed to prevent operators from ignoring/silencing them. Caution warnings may be designed to get the attention of an operator very quickly, for example by being prominent, loud, frequent, bright and the like. For example, alarms may display on a screen on the user interface in a very prominent manner, such as by blinking, taking up the entire user interface screen, etc. Alarms may initiate a loud sound, and may be designed to be annoying and/or attention getting in order to force the operator to take steps to remedy the situation. Once the operator takes steps to remedy the situation, the warnings may scale back from "alarm" to "caution" to "notification" classification and/or may stop completely.

The progressive/graduated warning system described in relation to FIG. **15** may utilize an "adaptive threshold" feature, whereby one or more thresholds (for example the preliminary, intermediate and critical thresholds) may be modified depending on the speed of one or more vehicles. The adaptive threshold feature may allow for scaling of thresholds of the alarm/notification levels based upon the speed of the immediate vehicle and the relative speed of the immediate vehicle and a vehicle that may collide with the immediate vehicle.

As explained above, the maintenance vehicles often work in work gangs comprising a plurality of vehicles, for example, a group of between four and forty vehicles, and the collision avoidance system is capable of tracking each vehicle that is part of the work gang. In some embodiments of the present technology, however, a single collision avoidance system may be responsible for tracking vehicles that are part of more than one work gang. For example, the collision avoidance system may track group A and group B. A collision avoidance system may be designed to distinguish between multiple work gangs so that the collision avoidance system can determine which vehicles are on the same track. In the event that maintenance vehicles are on two closely-located parallel tracks, it may be difficult for the collision avoidance system to determine which vehicles are on the same track and thus present real collision risks. The CAS may be adapted and/or programmed to handle work group designations/associations in order to limit unwanted detections of other maintenance vehicles on adjacent tracks.

In some embodiments, the VMMs and/or the CTU may include a switch, button, touch screen or the like that may be adapted to allow an operator to select from multiple group associations. All maintenance vehicles on a single track, for example, may set their switch, button, touch screen or the like to select the same group association/setting, and vehicles on a second parallel or other close but separate track may select a different group association/setting. The collision avoidance system may be adapted to ignore (or distinguish) the vehicles on the other tracks (vehicles with an alternate group association/setting), when tracking vehicles within a target group. For example, the work group selections/associations may allow the VMMs/CTU to only notify or alarm an operator when a separation distance violation is detected with other vehicles on the same track/rail. In some embodiments, the CAS may calculate the locations of vehicles using GPS data (or data from other positioning components) and may determine vector locations of such vehicles from which a reasonable calculation of track location can be determined. Other vehicles on an alternate vector could be dismissed by the collision avoidance system when tracking vehicles within a target group.

In some embodiments of the present disclosure, the CAS may include a stopping distance calibration feature and/or may perform a stopping distance calibration method. The stopping distance calibration feature/method may determine how quickly a rail line vehicle can stop under current conditions. For example, during a maintenance project, the work gang generally performs a stopping distance test (for example, at the beginning of each work day) where a vehicle is run at a speed (for example, 25 miles per hour) and then the vehicle's brakes may be engaged and a distance may be measured from the point where the brakes were engaged to the point where the vehicle comes to a stop. This distance may

be referred to as the "stopping distance." If the weather changes and the tracks become wet (or dry), a similar stopping distance test may be performed again, and a new distance measured.

After the stopping distance is measured, the CAS may calculate various safety metrics based on the stopping distance. For example, a safe following distance between vehicles may be adjusted according to the stopping distance. In some embodiments, the collision avoidance system may maintain minimum/default metrics and then adjust the metrics if necessary based on the stopping distance. For example, a minimum/default following distance may be maintained in all situations, and the following distance may be adjusted upwards (extended) if the stopping distance is relatively high. The stopping distance may be used in conjunction with an adaptive threshold feature of a progressive/graduated warning system as described above. For example, one or more safe separation distance thresholds (for example preliminary, intermediate and critical thresholds) may be modified depending on the stopping distance. The adaptive threshold feature may allow for scaling of thresholds of the alarm/notification levels based upon the stopping distance. In one example, one or more alarm thresholds may be made more strict if the stopping distance is too high, resulting in earlier alarms, for example to allow sufficient time to stop under the current conditions.

The CAS may include an automatic/real-time stopping distance calibration feature that, when triggered, may automatically calculate the stopping distance using information from the vehicle mounted module's GPS unit and/or inertial measurement unit (for example an accelerometer or a gyroscope). The new following distance will then be automatically calculated and utilized automatically as the collision avoidance system monitors for proper vehicle separation distance.

The CAS may create and/or maintain one or more logs of events that occur during the operation of the collision avoidance system. The individual VMMs may log information regarding the vehicle on which the vehicle mounted module is mounted. The CTU may also log information regarding the several vehicles in the work gang that the CTU tracks. Saved logs may be downloadable by an authorized person, for example via a cable or a wireless connection to a laptop computer or via an interface card. The amount of log data and time periods of data may be adjustable. Each log entry may be stamped with various types of information, for example the time and duration of the event occurrence, an ID, speed and location of the vehicle and the nature of the event. The collision avoidance system may also log information from a vehicle mounted module's inertial measurement unit (for example an accelerometer or a gyroscope) and/or other shock and impact sensors mounted on a vehicle to record significant impact data related to an incident. All warnings and alarms may be logged as well. Detailed log information may allow railroad personnel to reconstruct the details of an incident. The CAS may allow for logging of vehicle positioning over time using GPS satellite data. This feature allows long term tracking of vehicle location and activities. The CAS may allow for logging of data related to one or more stopping distance calibration tests, for example routine/daily stopping distance calibration tests and/or automatic/real-time stopping distance calibration tests.

In some embodiments of the present disclosure, the collision avoidance system may include the ability to monitor worker presence around machines so that a worker or foreman may be alerted if a worker is standing in an unsafe location. For example, if a worker is standing on the tracks near a vehicle as another vehicle approaches and violates a predetermined separation criteria, the worker and the foreman may be alerted, and perhaps emergency brakes may be activated. The collision avoidance system may monitor the workers by communicating with a communication device that is located on the worker, for example attached to the worker's badge. In one example, the communication device may be an RFID device. In another example, the communication device may be a UWB device, for example a subset of a UWB ranging system that includes components, some that are located on vehicles and some components that are located on workers.

A communication device located on a worker may communicate with one or more components located in one or more vehicle mounted modules, and/or it may communicate with a central tracking unit in a discrete housing. For example, if the communication device communicates with a vehicle mounted module, the vehicle mounted module may determine the orientation and distance of the worker in relation to the vehicle.

In some embodiments of the present disclosure, the collision avoidance system may utilize the concepts described herein to monitor the "vehicle stretch" of a train that includes several cars. As a train starts, stops and changes speed, the "play" in the couplings between the cars may allow the total length of the train to change. For example, if the train starts to slow down, the cars may compact closer to each other as the couplings lock more closely, and the overall length of the train may decrease. The opposite may occur if the train begins to accelerate, for example. Vehicle stretch is an important concept because it may be a measure of efficiency in the vehicle. Stretching and compacting of the vehicles wastes energy, and if the stretch of a vehicle can be monitored, the vehicle may be designed to reduce stretch. The collision avoidance system technologies described herein, for example the UWB technology and other close proximity sensing technologies, may be used to monitor distance between train cars, and then calculations can be made in the collision avoidance system to determine vehicle stretch.

In some embodiments of the present disclosure, the collision avoidance system may monitor, nationwide, locations and speeds of vehicles, equipment and/or workers equipped with collision avoidance system technology. For example, this may allow a central railroad office to monitor several work projects that are underway at several different locations throughout the country.

In some embodiments of the present disclosure, the collision avoidance system may have the ability to interface with rail line crossing technology to control gates while the vehicles work under the surveillance of the collision avoidance system. For example, if the collision avoidance system and the crossing technology were engineered by the same company, group or firm, the interface may be seamless.

Regarding the benefits of the collision avoidance system, in addition to the benefits already described in this disclosure, the following describes further benefits of one or more embodiments of the present technology. It is to be understood that the described benefits are not limitations or requirements, and some embodiments may omit one or more of the described benefits. In some embodiments, a benefit of the collision avoidance system may be that it is implemented as a supplement to existing safety procedures and devices already established for railroad maintenance vehicles and personnel. Alternatively, the collision avoidance system may be implemented as a primary (and perhaps the sole) collision avoidance and safety system.

Other benefits of the collision avoidance system can be realized when the collision avoidance system is compared to a single-sensor collision avoidance technology. Single sensor technologies do not work well when the work environment includes environmental and physical limitations. In addition to the complexities of tracking vehicles that travel through tunnels, mountains, building and the like, tracking vehicles can also become more complex when the vehicles travel or operate around curves or when the vehicles operate at night or during rain, snow and fog. Curves and other weather conditions create complex sensing environments that render single sensor technologies and/or strictly line-of-sight technologies inadequate. The multi-sensor approach of the collision avoidance system described above, allows for precise tracking of vehicles in these situations.

Another benefit of the collision avoidance system is that railroad companies can use the collision avoidance system to maintain an efficiently running railroad. For example, when an accident occurs in a remote area with single track, it may take days to re-open track after an accident. If the railroad companies can avoid more collisions and keep the tracks open, users of the railroad can make more efficient use of the railroad. A related benefit is that the collision avoidance system can significantly reduce the cost of running a railroad. Not only will the collision avoidance system help the railroad reduce the number of accidents, but the collision avoidance system logging functionality will give the railroads the ability to store data regarding accidents. This information may be used to alleviate rail payouts in the event of worker liability.

Although the present disclosure describes a collision avoidance system that may be applied to a work gang of railroad vehicles, the technology and the concepts described herein may be utilized in other vehicles, applications and/or industries, for example, in industries where spacing, location and status is important. Some industries that may utilize the concepts described herein are (1) the construction industry, (2) the mining industry, (3) the airport industry, specifically on airport tarmacs.

In some alternative implementations of the present disclosure, the function or functions illustrated in the blocks or symbols of a block diagram or flowchart may occur out of the order noted in the figures, and/or may include more or less steps than are shown in the figures. For example in some cases two blocks or symbols shown in succession may be executed substantially concurrently or the blocks may sometimes be executed in the reverse order depending upon the functionality involved.

One or more embodiments of the present disclosure may be realized in hardware, software, or a combination of hardware and software. The present disclosure may be realized in a centralized fashion in at least one machine, computer and/or data processing system; or in a distributed fashion where different elements are spread across several interconnected machines, computers and/or data processing systems. Any kind of machine, computer and/or data processing system or other apparatus adapted for carrying out the methods described herein is suited. A typical combination of hardware and software may be a general-purpose computer system with a computer program that, when being loaded and executed, controls the computer system such that it carries out the methods and techniques described herein.

Some embodiments of the present disclosure may provide a non-transitory machine and/or computer-readable storage and/or media, having stored thereon, a machine code and/or a computer program having at least one code section executable by a machine, computer and/or data processing system, thereby causing the machine, computer and/or data processing system to perform the steps as described herein. One example of a data processing system is a general purpose computer.

Some embodiments of the present disclosure may also be embedded in a computer program product, which comprises all the features enabling the implementation of the methods described herein, and which when loaded in a computer system is able to carry out these methods. Computer program in the present context means any expression, in any language, code or notation, of a set of instructions intended to cause a system having an information processing capability to perform a particular function either directly or after either or both of the following: a) conversion to another language, code or notation; b) reproduction in a different material form.

In the present specification, use of the singular includes the plural except where specifically indicated. In the present specification, any of the functions recited herein may be performed by one or more means for performing such functions. The present systems and methods may include various means, modules, code segments, computer programs and/or software for performing one or more of the steps or actions described in this specification. It is expressly contemplated and disclosed that the present specification provides a written description for claims comprising such means, modules, steps, code segments, computer programs and/or software.

The description of the different advantageous embodiments has been presented for purposes of illustration and description and is not intended to be exhaustive or limited to the embodiments in the form disclosed. Many modifications and variations will be apparent to those of ordinary skill in the art. Further different advantageous embodiments may provide different advantages as compared to other advantageous embodiments. The embodiment or embodiments selected are chosen and described in order to best explain the principles of the embodiments the practical application and to enable others of ordinary skill in the art to understand the disclosure for various embodiments with various modifications as are suited to the particular use contemplated.

The invention claimed is:

1. A collision avoidance system comprising:

one or more vehicle mounted modules, each vehicle mounted module mountable on a rail vehicle, each vehicle mounted module comprising:

a transponder sensor module operable to send and receive data wirelessly, the transponder module comprising a first ultra wideband unit and a first antenna;

a control electronics module comprising a processor in communication with at least the transponder sensor module unit; and

a user interface module including a user interface, the user interface being operable to provide rail vehicle information to a vehicle operator and to receive input from the vehicle operator; and wherein each vehicle mounted module is operable to communicate with at least one other vehicle mounted module mounted on at least one other rail vehicle, and wherein each vehicle mounted module is operable to apply a time of flight technique to determine a separation distance between the rail vehicles.

2. The collision avoidance system of claim **1**, further comprising a central tracking unit in communication with the first vehicle mounted module and the second vehicle mounted module, wherein the central tracking unit is operable to track the location of at least the first vehicle mounted module and the second vehicle mounted module.

3. The collision avoidance system of claim **2**, wherein the central tracking unit is distributed among a plurality of rail

vehicles, including at least the first and second rail vehicles, wherein the first vehicle mounted module comprises a first central tracking unit component.

4. The collision avoidance system of claim **2**, wherein the central tracking unit is located in a discreet housing.

5. The collision avoidance system of claim **1**, wherein the first vehicle mounted module further comprises an auxiliary transponder sensor module, the auxiliary transponder sensor module mounted on the first rail vehicle with an offset with respect to the transponder sensor module, and

wherein the user interface is operable to provide calibration information related to the length of the first rail vehicle, the mounting location of the first transponder sensor module, and the mounting location of the auxiliary transponder sensor module.

6. The collision avoidance system of claim **5**, wherein the auxiliary transponder sensor module comprises an auxiliary antenna, the auxiliary antenna being connected to at least one of the first ultra wideband unit or an auxiliary ultra wideband unit, and

wherein the auxiliary antenna is mounted on the first rail vehicle with an offset with respect to the first antenna.

7. The collision avoidance system of claim **1**, wherein the first vehicle mounted module further comprises a global positioning system unit, the global positioning system unit operable to receive information from one or more satellites to determine an absolute position of the rail vehicle, wherein the global positioning system unit is in communication with the control electronics module.

8. The collision avoidance system of claim **7**, wherein the first vehicle mounted module receives information generated by the global positioning system unit and the first ultra wideband unit to determine whether one or more vehicle separation criteria are violated, and generates a warning signal when one or more vehicle separation criteria are violated.

9. The collision avoidance system of claim **1**, wherein the first vehicle mounted module is operable to execute a progressive warning signal if one or more vehicle separation criteria are violated, and

wherein the progressive warning signal increases in at least one of signal rate, signal frequency, signal prominence, signal volume, or signal severity as the violation of the vehicle separation criteria approaches or extends beyond a vehicle separation threshold.

10. The collision avoidance system of claim **9**, wherein the first vehicle mounted module executes an adaptive threshold feature that modifies one or more vehicle separation thresholds based on the speed of the first rail vehicle and the speed of the second rail vehicle.

11. The collision avoidance system of claim **1**, further comprising at least one ground speed detection module operable to determine the speed of the rail vehicle, wherein the first vehicle mounted module communicates with the at least one ground speed detection module.

12. The collision avoidance system of claim **1**, further comprising an inertial measurement unit in communication with at least the control electronics module, the inertial measurement unit being operable to detect changes in the speed of the first rail vehicle.

13. The collision avoidance system of claim **12**, wherein the inertial measurement unit comprises at least one of an accelerometer or a gyroscope.

14. The collision avoidance system of claim **1** wherein the ultra wideband unit is adapted to transmit and receive signals with varying center frequencies.

15. The collision avoidance system of claim **1**, wherein the first vehicle mounted module is operable to execute a stopping distance calibration feature that measures a stopping distance under existing conditions, wherein the stopping distance measures the distance between the point where the brakes are engaged to the point where the vehicle comes to a stop under the existing conditions.

16. The collision avoidance system of claim **15**, wherein the first vehicle mounted module executes a progressive warning signal if one or more vehicle separation criteria are violated, wherein the progressive warning signal increases in at least one of signal rate, signal frequency, signal prominence, signal volume, or signal severity as the violation of the vehicle separation criteria approaches or extends beyond a vehicle separation threshold, and wherein the first vehicle mounted module executes an adaptive threshold feature that modifies one or more vehicle separation thresholds based on the measured stopping distance.

17. A rail vehicle module mountable on a rail vehicle, the module comprising:

a transponder sensor module comprising:

a radio communication unit operable to employ time of flight techniques to detect a distance between the rail vehicle and at least one other vehicle;

a wireless communications antenna operable to send and receive data over the air; and

a global positioning system unit operable to receive information from one or more satellites to determine an absolute position of the rail vehicle;

a control electronics module comprising a processor in communication with at least the first transponder sensor module; and

a user interface module including a user interface operable to provide rail vehicle information to a vehicle operator and to receive input from the vehicle operator; wherein the rail vehicle module communicates with at least one other module mounted on at least one other vehicle to detect a separation distance between the rail vehicle and the at least one other vehicle.

18. The rail vehicle module of claim **17**, wherein the radio communication unit comprises an ultra wideband unit configured to send and receive ultra wideband signals.

19. The rail vehicle module of claim **18**, wherein the ultra wideband unit is adapted to transmit and receive signals with varying center frequencies.

20. The rail vehicle module of claim **17**, further comprising a second wireless communications antenna mounted on the rail vehicle with an offset with respect to the first antenna, wherein the rail vehicle module is operable to receive calibration information related to the length of the rail vehicle, the mounting location of the first wireless communications antenna and the mounting location of the second wireless communications antenna.

21. The rail vehicle module of claim **17**, wherein the rail vehicle module is operable to utilize information generated by the radio communication unit and the global positioning system unit to determine whether one or more vehicle separation criteria are violated, and generate a progressive warning signal if one or more vehicle separation criteria are violated, wherein the progressive warning signal increases in at least one of signal rate, signal frequency, signal prominence, signal volume, or signal severity as the violation of the vehicle separation criteria approaches or extends beyond a vehicle separation threshold.

22. The rail vehicle module of claim **17**, further comprising a central tracking unit component, wherein the central tracking unit component is in communication with a central tracking unit component mounted on the at least one other vehicle.

23. The collision avoidance system of claim **16**, further comprising an inertial measurement unit in communication with at least the control electronics module, the inertial measurement unit being operable to detect changes in the speed of the first rail vehicle.

24. A collision avoidance system comprising

one or more vehicle mounted modules, each vehicle mounted module mountable on a rail vehicle, each vehicle mounted module comprising:

a transponder sensor module comprising:

a radio communication unit operable to employ time of flight techniques to detect a distance between rail vehicles; and

a global positioning system unit operable to receive information from one or more satellites to determine an absolute position of the rail line vehicle;

a control electronics module comprising a processor, the control electronics module being in communication with at least the transponder sensor module; and

a user interface operable to provide rail vehicle information to a vehicle operator and to receive input from the vehicle operator;

wherein each of the two or more rail vehicle modules communicate to determine a separation distance between each rail vehicle, and wherein each rail vehicle module is operable to use information provided by the radio communication unit and the global positioning system unit to determine whether one or more vehicle separation criteria are violated, and to generate a warning signal if one or more vehicle separation criteria are violated.

25. The collision avoidance system of claim **24**, wherein each radio communication unit comprises an ultra wideband unit.

26. The collision avoidance system of claim **24**, wherein the progressive warning signal increases in at least one of signal rate, signal frequency, signal prominence, signal volume, or signal severity as the violation of the vehicle separation criteria approaches or extends beyond a vehicle separation threshold.

27. The collision avoidance system of claim **24**, further comprising a central tracking unit in communication with each rail vehicle module, the central tracking unit operable to track the location of each rail vehicle module.

28. The collision avoidance system of claim **27**, wherein the central tracking unit is distributed among the rail vehicle modules, wherein each of the one or more rail vehicle modules includes a central tracking unit component, each central tracking unit component being in communication with the control electronics module of the rail vehicle module.

* * * * *

EXHIBIT C

US009043131B2

(12) **United States Patent**
Carlson et al.

(10) **Patent No.: US 9,043,131 B2**
(45) **Date of Patent: *May 26, 2015**

(54) **COLLISION AVOIDANCE SYSTEM FOR RAIL LINE VEHICLES**

(71) Applicant: **Metrom Rail, LLC**, Lake Zurich, IL (US)

(72) Inventors: **Richard C. Carlson**, Village of Lakewood, IL (US); **Kurt A. Gunther**, Round Lake Heights, IL (US); **Marc W. Cygnus**, Mundelein, IL (US)

(73) Assignee: **Metrom Rail, LLC**, Lake Zurich, IL (US)

(*) Notice: Subject to any disclaimer, the term of this patent is extended or adjusted under 35 U.S.C. 154(b) by 0 days.

This patent is subject to a terminal disclaimer.

(21) Appl. No.: **14/252,987**

(22) Filed: **Apr. 15, 2014**

(65) **Prior Publication Data**

US 2014/0229096 A1 Aug. 14, 2014

Related U.S. Application Data

(63) Continuation of application No. 13/474,428, filed on May 17, 2012, now Pat. No. 8,812,227.

(60) Provisional application No. 61/598,750, filed on Feb. 14, 2012, provisional application No. 61/627,697, filed on Oct. 17, 2011, provisional application No. 61/519,201, filed on May 19, 2011.

(51) **Int. Cl.**
G05D 1/02 (2006.01)
G06F 17/10 (2006.01)
(Continued)

(52) **U.S. Cl.**
CPC ***B61L 15/0027*** (2013.01); ***B61L 23/06*** (2013.01); ***B61L 25/025*** (2013.01); *B61L 2205/04* (2013.01); ***G08G 1/161*** (2013.01); ***G08G 1/166*** (2013.01); ***B61L 23/34*** (2013.01)

(58) **Field of Classification Search**
CPC . B61L 15/0027; B61L 23/06; B61L 2205/04; B61L 25/025; B61L 23/34; G08G 1/161; G08G 1/166
USPC 701/19, 300, 301, 408, 468–470, 538; 340/436, 988
See application file for complete search history.

(56) **References Cited**

U.S. PATENT DOCUMENTS

3,891,168 A * 6/1975 Kraus ..... 246/167 R
6,295,019 B1 9/2001 Richards et al.

(Continued)

OTHER PUBLICATIONS

Time Domain's Ultra Wideband, (UWB), Definition and Advantages, 320-0294A, Mar. 2011, pp. 1-14, Huntsville, Alabama.

(Continued)

Primary Examiner — Russell Frejd
(74) *Attorney, Agent, or Firm* — McAndrews, Held & Malloy, Ltd.

(57) **ABSTRACT**

A collision avoidance system (CAS) is described that includes one or more sensor technologies, including, for example, an Ultra Wideband (UWB) sensing technology. The collision avoidance system is designed to reliably track the location and speed of vehicles and the distance between vehicles over a wide variety of track and terrain. The collision avoidance system may utilize information from a variety of sensor technologies to determine whether one or more vehicles violate speed and/or separation criteria, and may generate a warning.

20 Claims, 15 Drawing Sheets

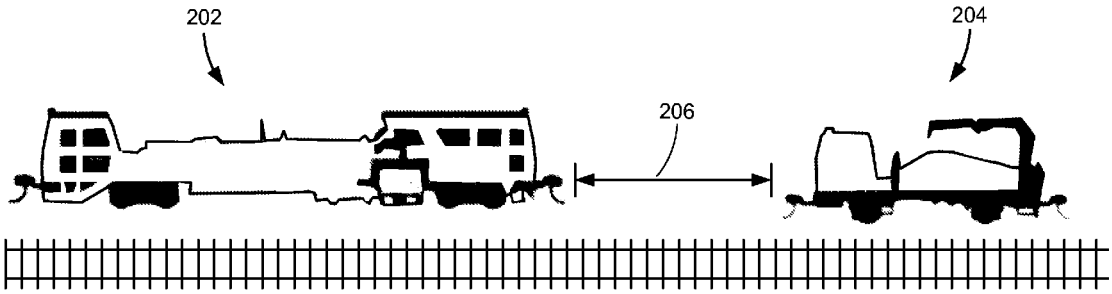

(51) **Int. Cl.**

G06G 7/78	(2006.01)
B61L 25/02	(2006.01)
B61L 15/00	(2006.01)
B61L 23/06	(2006.01)
G08G 1/16	(2006.01)
B61L 23/34	(2006.01)

(56) **References Cited**

U.S. PATENT DOCUMENTS

6,917,284	B2	7/2005	Grisham et al.
7,148,791	B2	12/2006	Grisham et al.
2003/0028323	A1	2/2003	Zeitler et al.
2006/0025897	A1	2/2006	Shostak et al.
2006/0151672	A1	7/2006	Heddebaut et al.
2008/0150786	A1	6/2008	Breed
2009/0173839	A1	7/2009	Groeneweg et al.
2010/0207787	A1	8/2010	Catten et al.
2010/0225527	A1	9/2010	Talty et al.
2012/0138752	A1	6/2012	Carlson et al.
2013/0279392	A1*	10/2013	Rubin et al. 370/312

OTHER PUBLICATIONS

International Search Report and Written Opinion of the International Searching Authority, International Application No. PCT/US12/38332, International Filing Date May 17, 2012, METROM RAIL, dated Jul. 13, 2012.

Notification Concerning Transmittal of International Preliminary Report of Patentability, International Application No. PT/US12/38332, International Filing date May 17, 2012, METROM RAIL, dated Nov. 28, 2013.

* cited by examiner

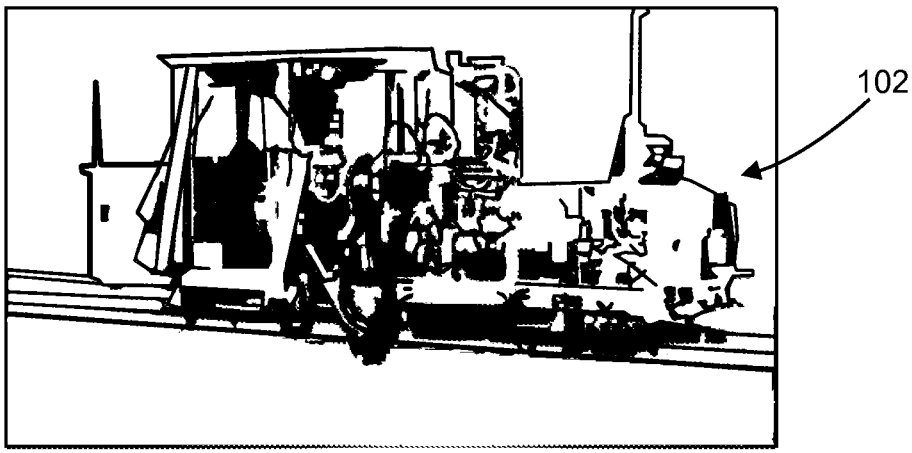

Fig. 1A

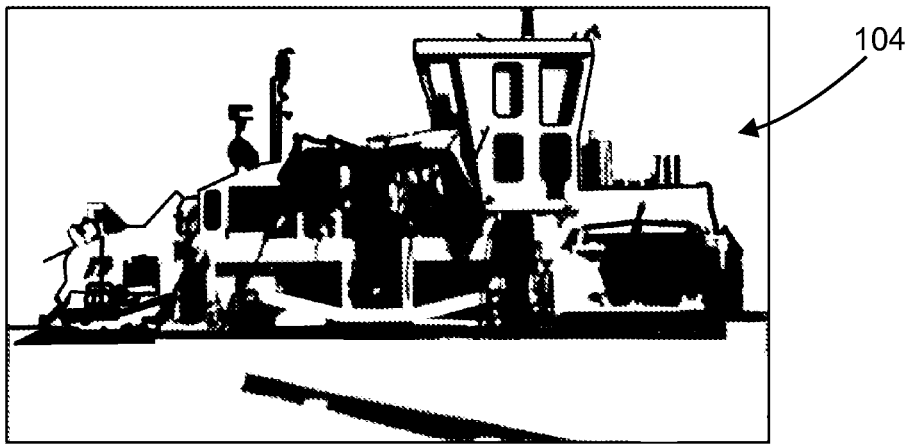

Fig. 1B

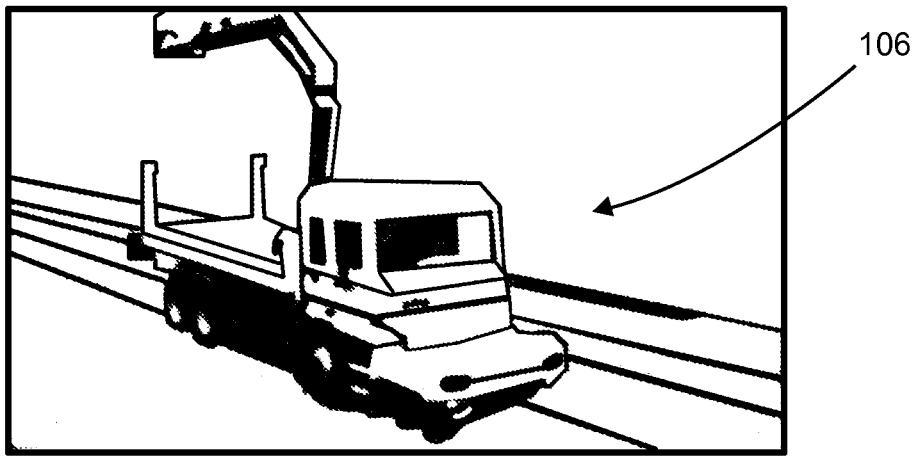

Fig. 1C

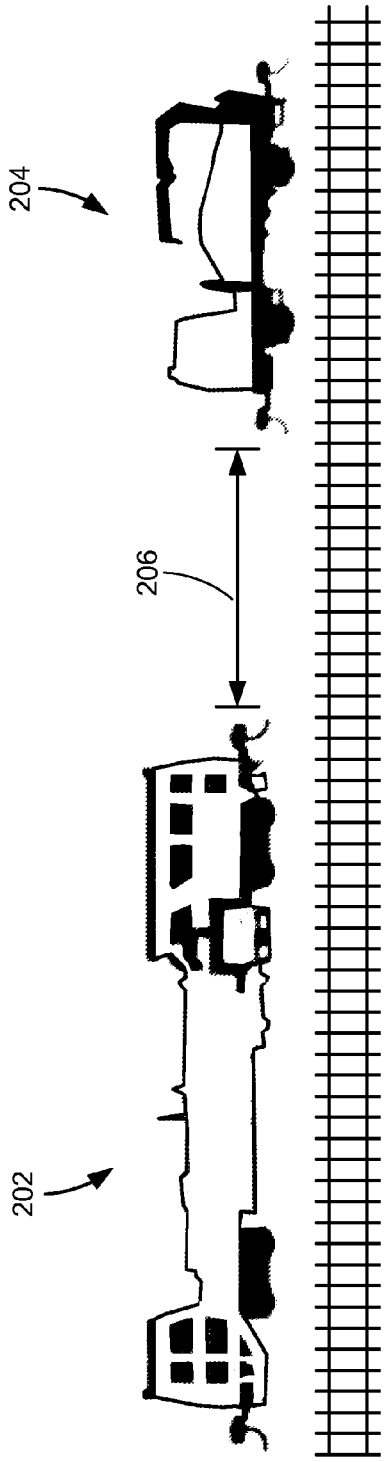

Fig. 2

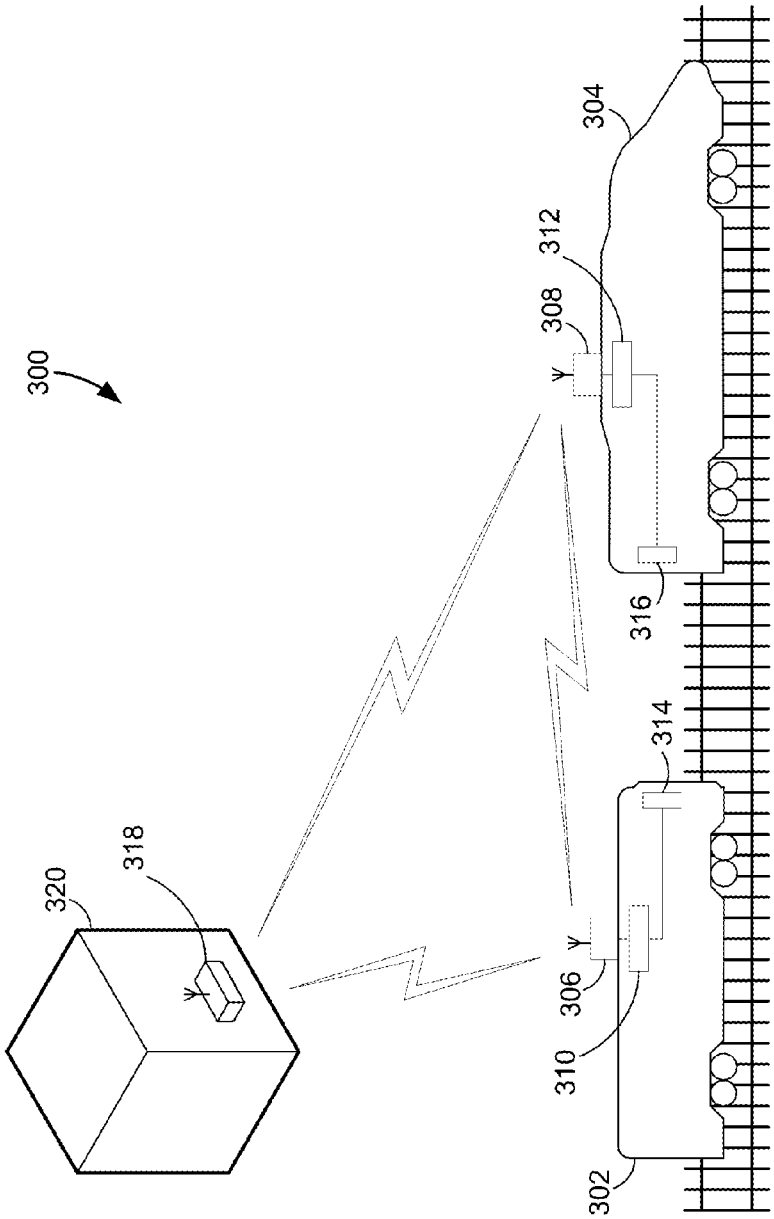

Fig. 3

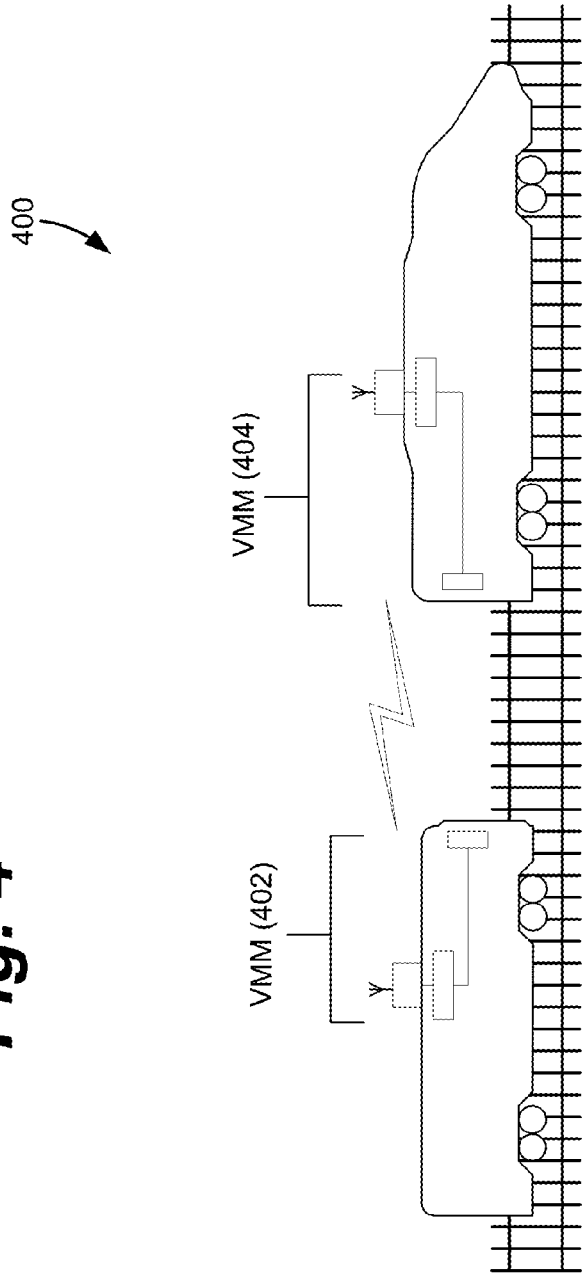

Fig. 4

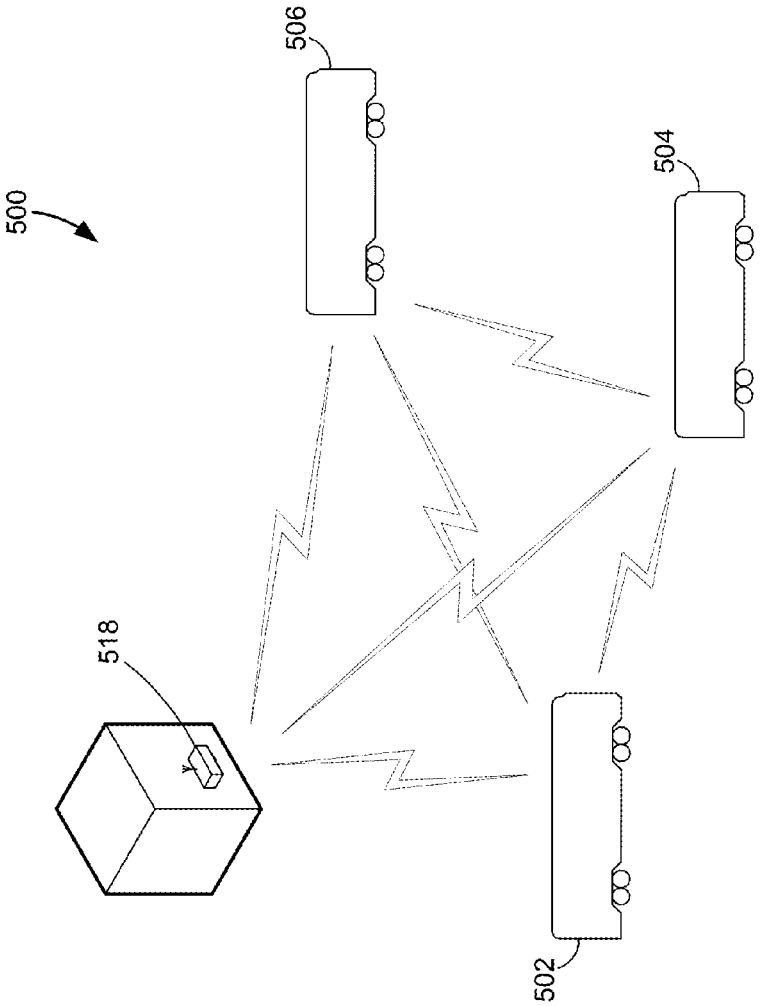

Fig. 5

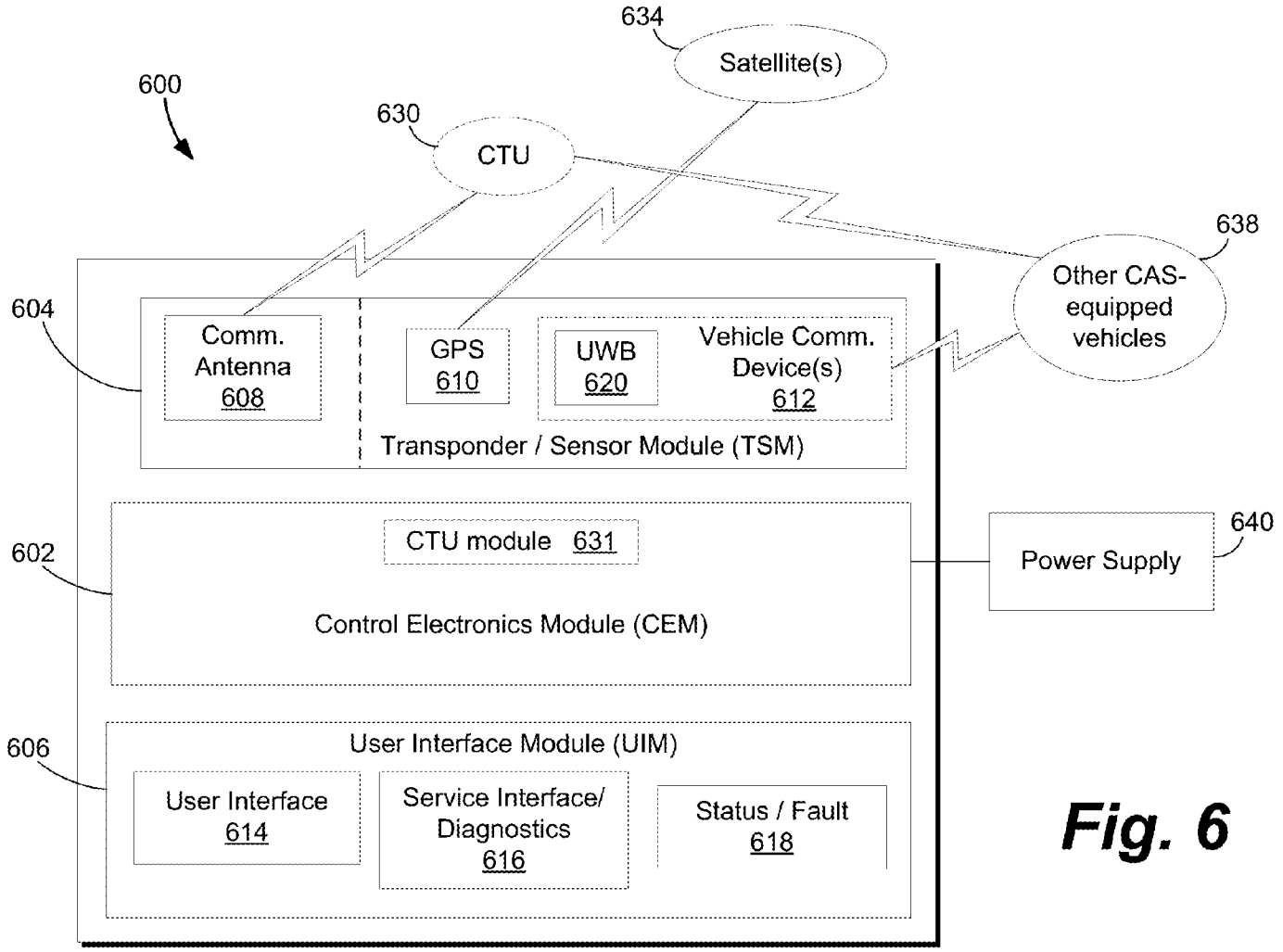
600
634
Satellite(s)
630
CTU
638
Other CAS-equipped vehicles
604
Comm. Antenna 608
GPS 610
UWB 620
Vehicle Comm. Device(s) 612
Transponder / Sensor Module (TSM)
602
CTU module 631
Control Electronics Module (CEM)
640
Power Supply
606
User Interface Module (UIM)
User Interface 614
Service Interface/ Diagnostics 616
Status / Fault 618

Fig. 6

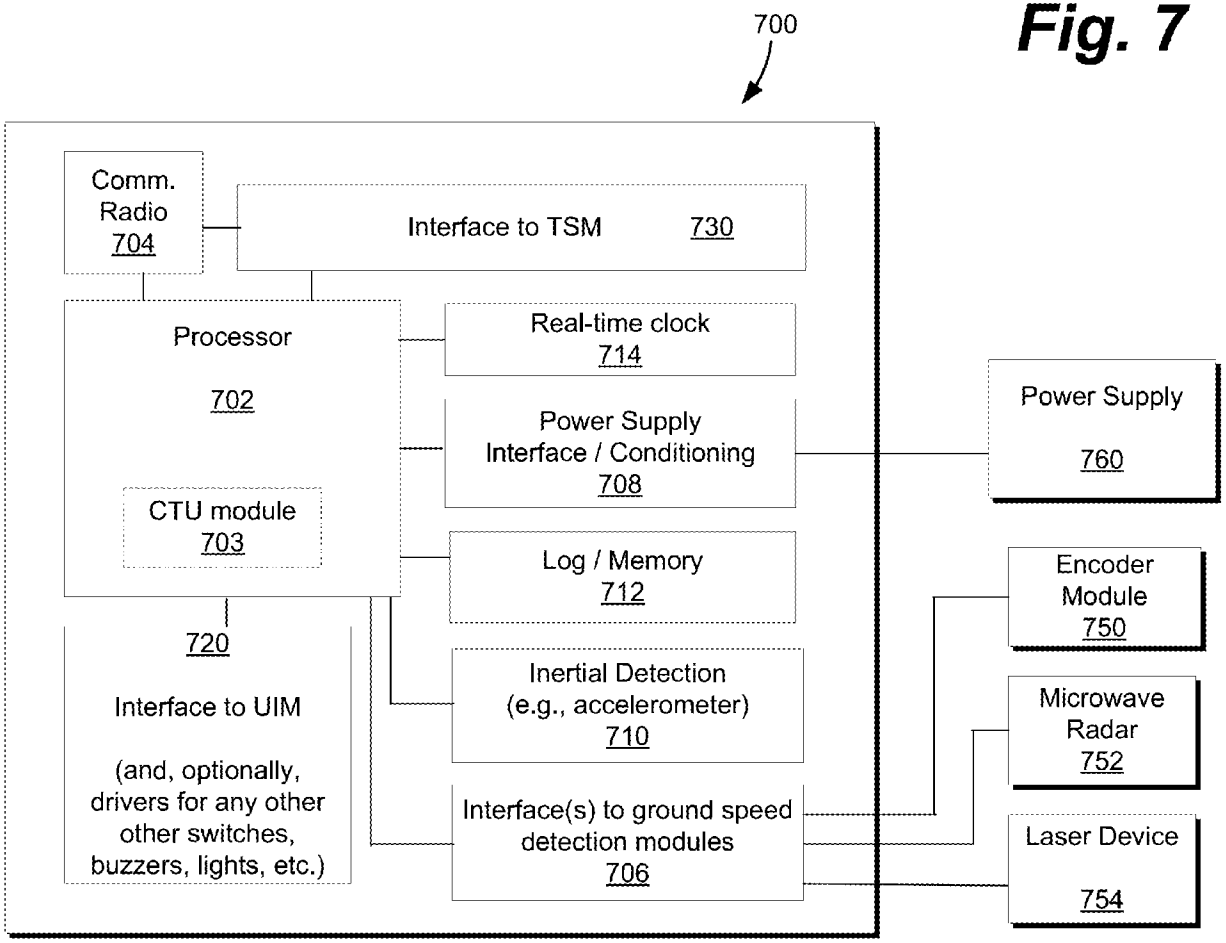
700
Comm. Radio 704
Interface to TSM 730
Processor 702
CTU module 703
Real-time clock 714
Power Supply Interface / Conditioning 708
Log / Memory 712
Inertial Detection (e.g., accelerometer) 710
Interface(s) to ground speed detection modules 706
720
Interface to UIM
(and, optionally, drivers for any other other switches, buzzers, lights, etc.)
Power Supply 760
Encoder Module 750
Microwave Radar 752
Laser Device 754

Fig. 7

Fig. 8

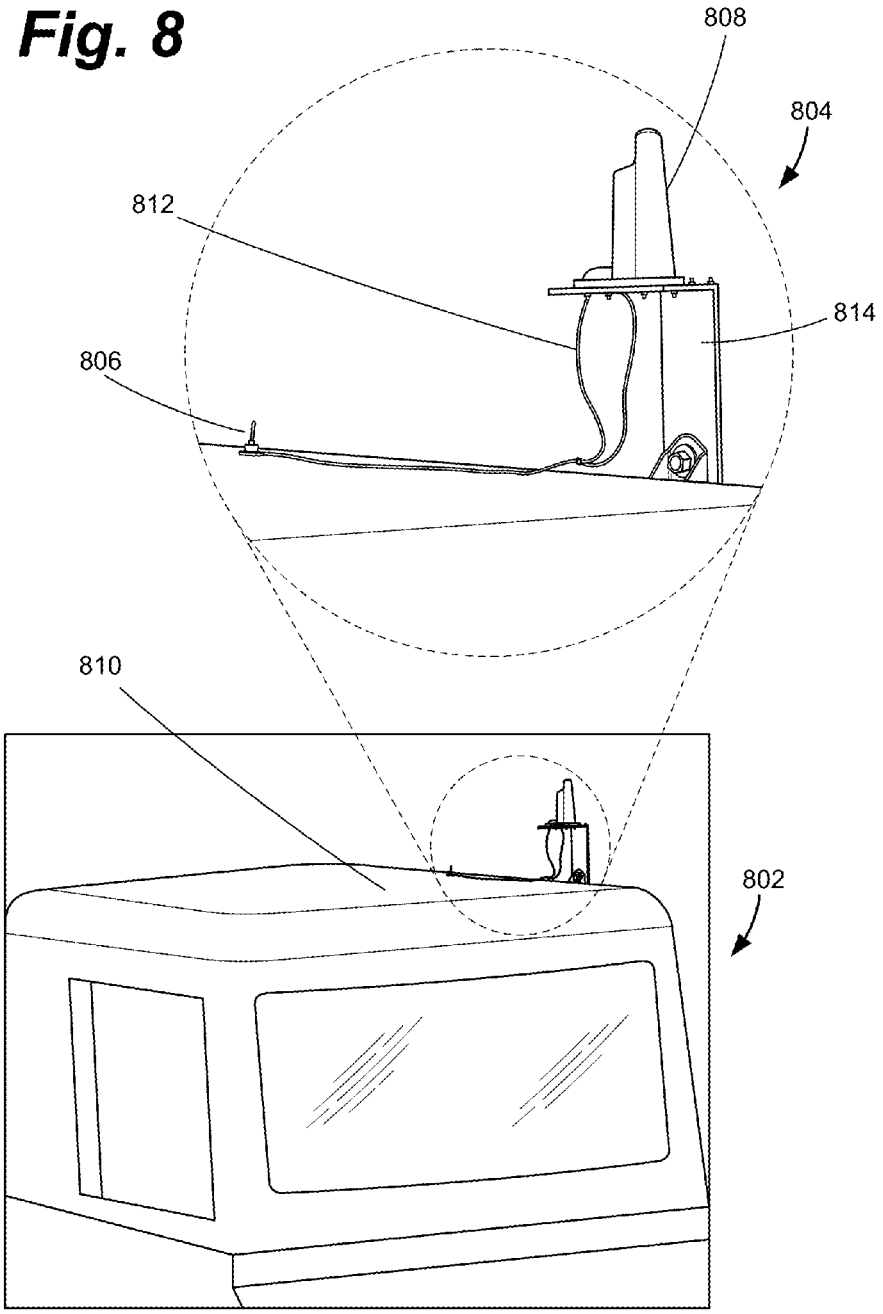

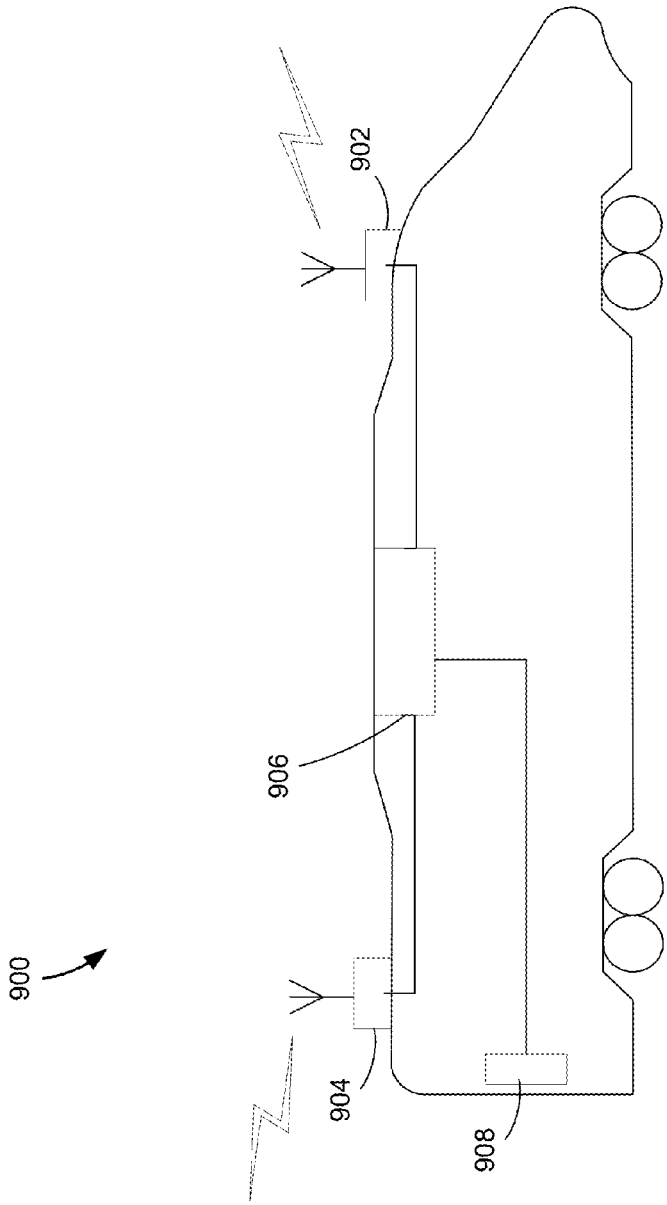

Fig. 9

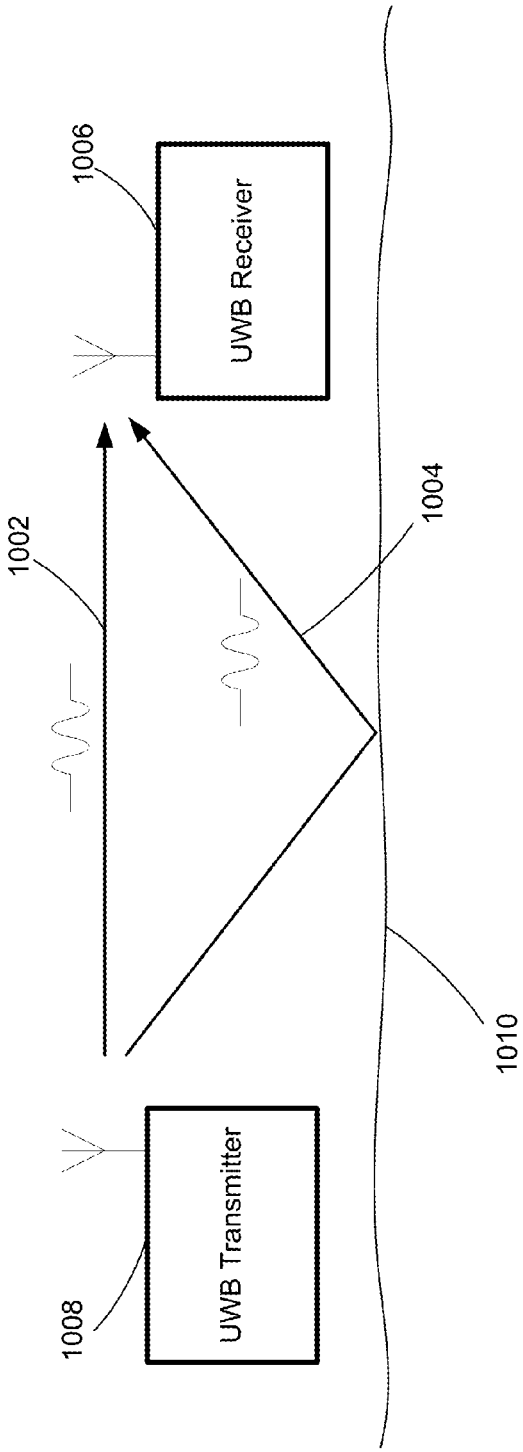

Fig. 10

Fig. 11

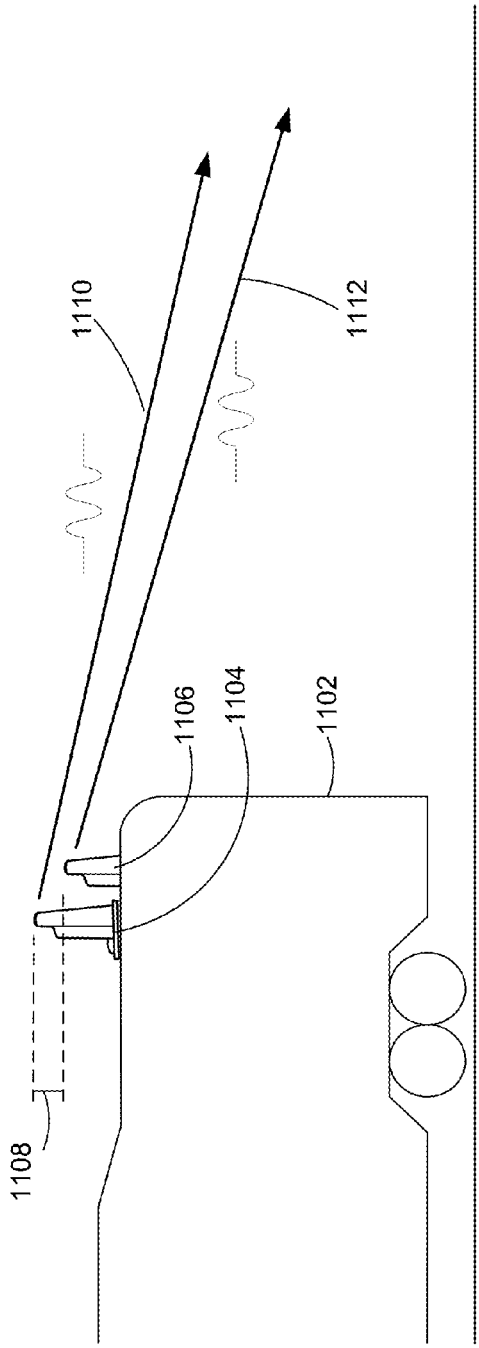

Fig. 12A

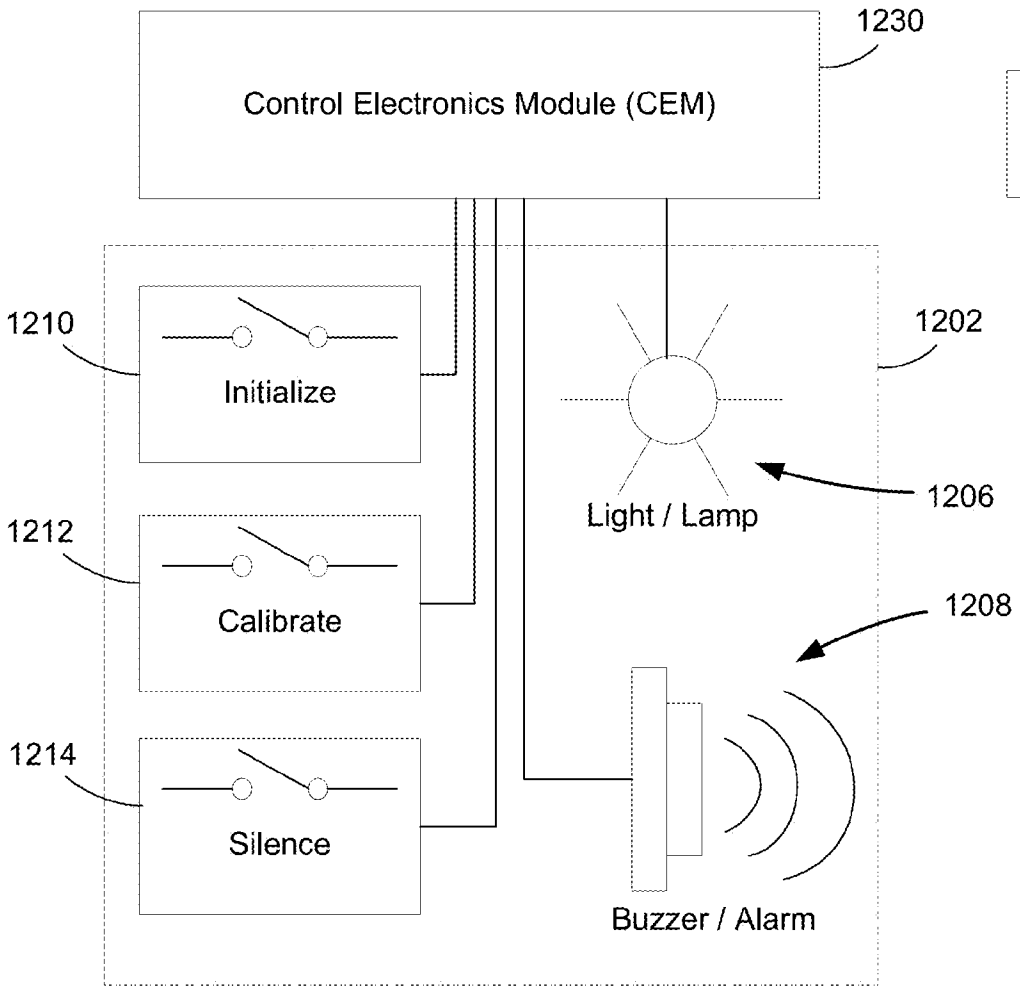

Fig. 12B

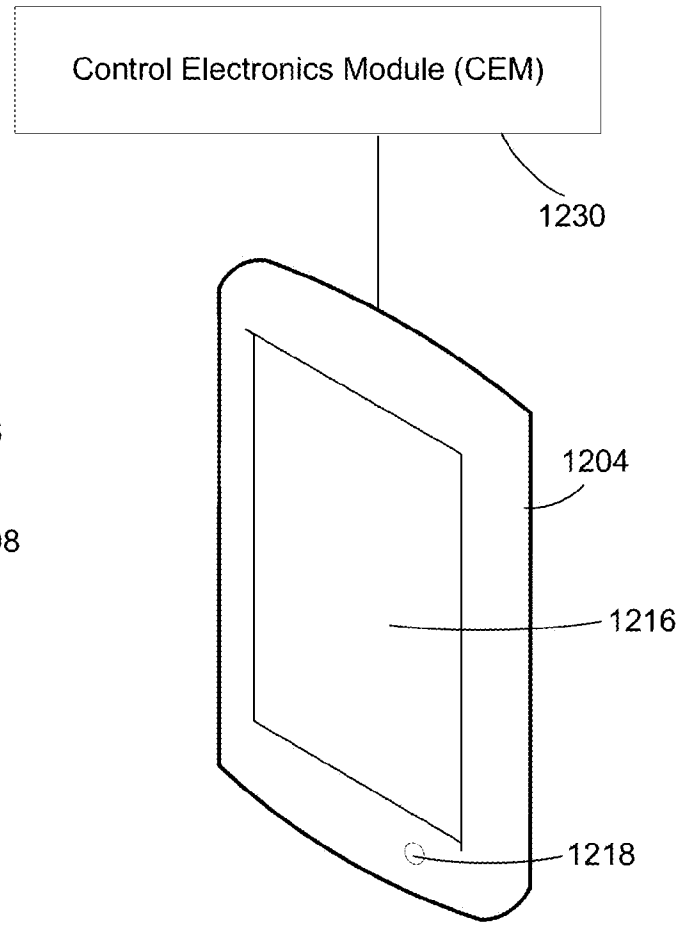

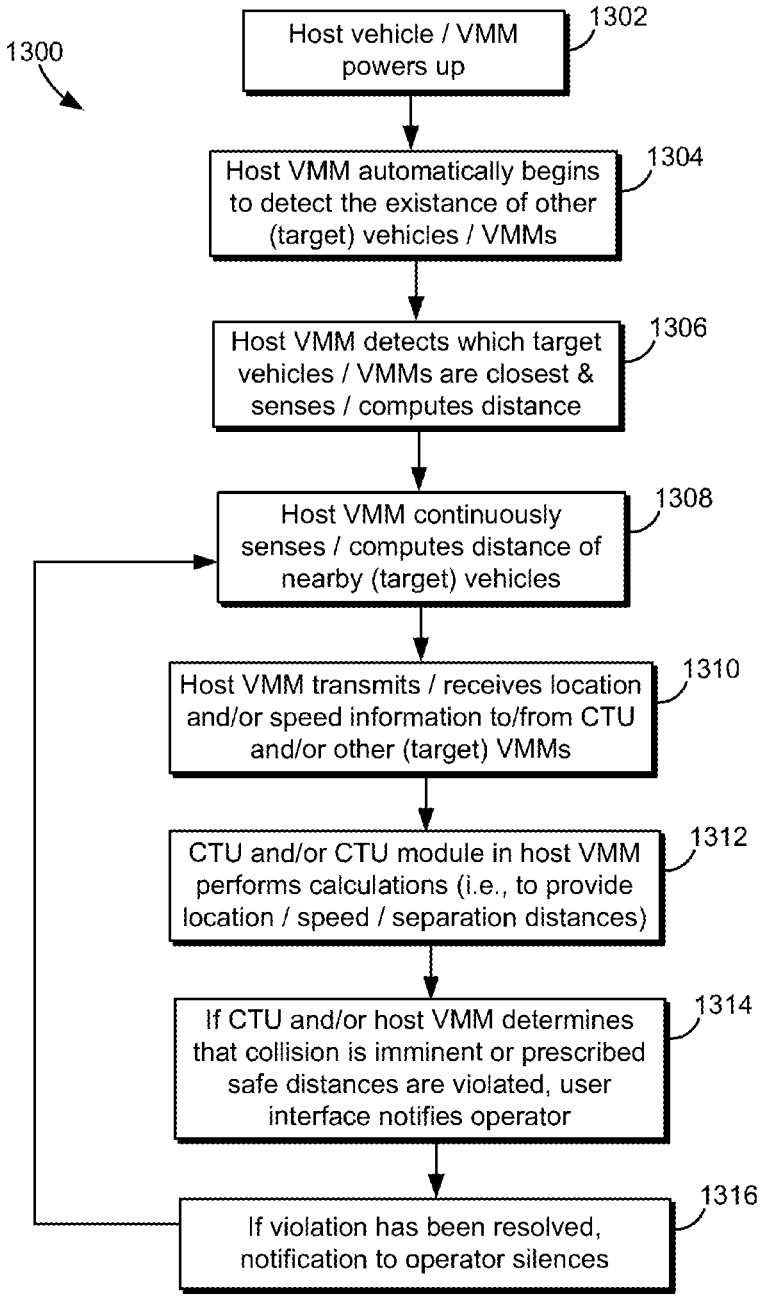
1300
Host vehicle / VMM powers up
1302
Host VMM automatically begins to detect the existance of other (target) vehicles / VMMs
1304
Host VMM detects which target vehicles / VMMs are closest & senses / computes distance
1306
Host VMM continuously senses / computes distance of nearby (target) vehicles
1308
Host VMM transmits / receives location and/or speed information to/from CTU and/or other (target) VMMs
1310
CTU and/or CTU module in host VMM performs calculations (i.e., to provide location / speed / separation distances)
1312
If CTU and/or host VMM determines that collision is imminent or prescribed safe distances are violated, user interface notifies operator
1314
If violation has been resolved, notification to operator silences
1316

Fig. 13

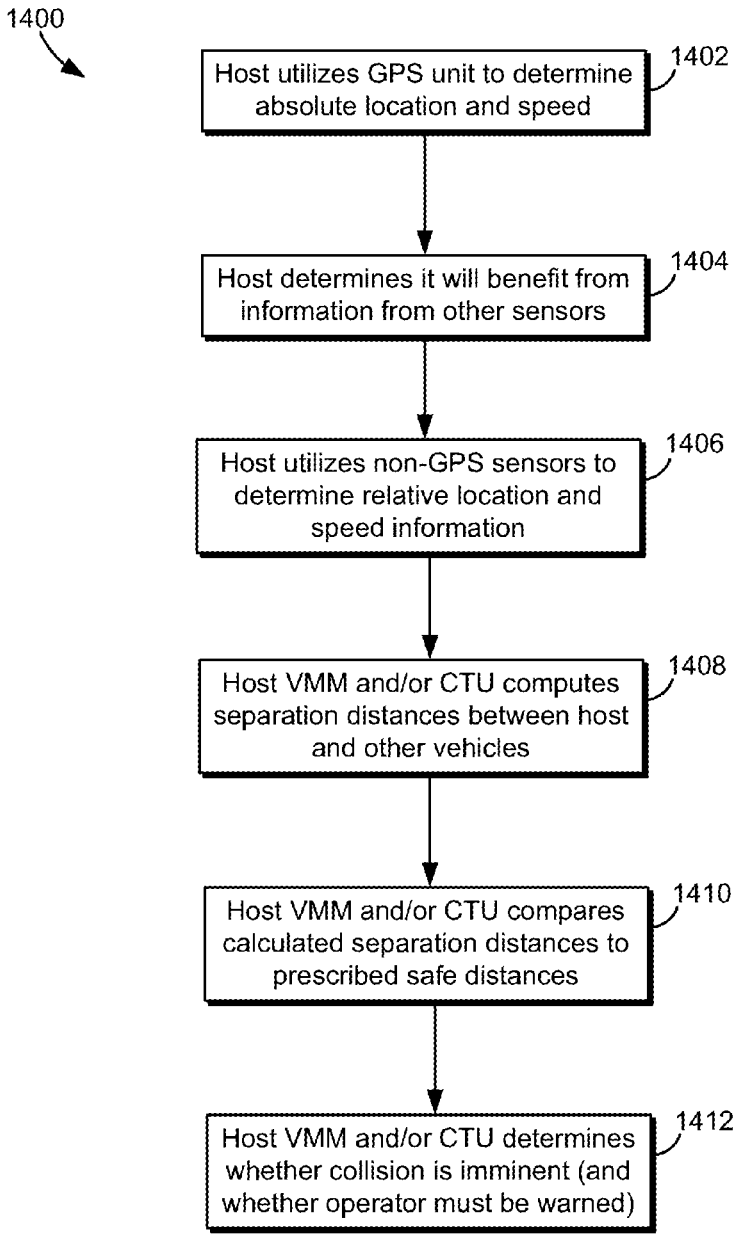
1400
Host utilizes GPS unit to determine absolute location and speed
1402
Host determines it will benefit from information from other sensors
1404
Host utilizes non-GPS sensors to determine relative location and speed information
1406
Host VMM and/or CTU computes separation distances between host and other vehicles
1408
Host VMM and/or CTU compares calculated separation distances to prescribed safe distances
1410
Host VMM and/or CTU determines whether collision is imminent (and whether operator must be warned)
1412

Fig. 14

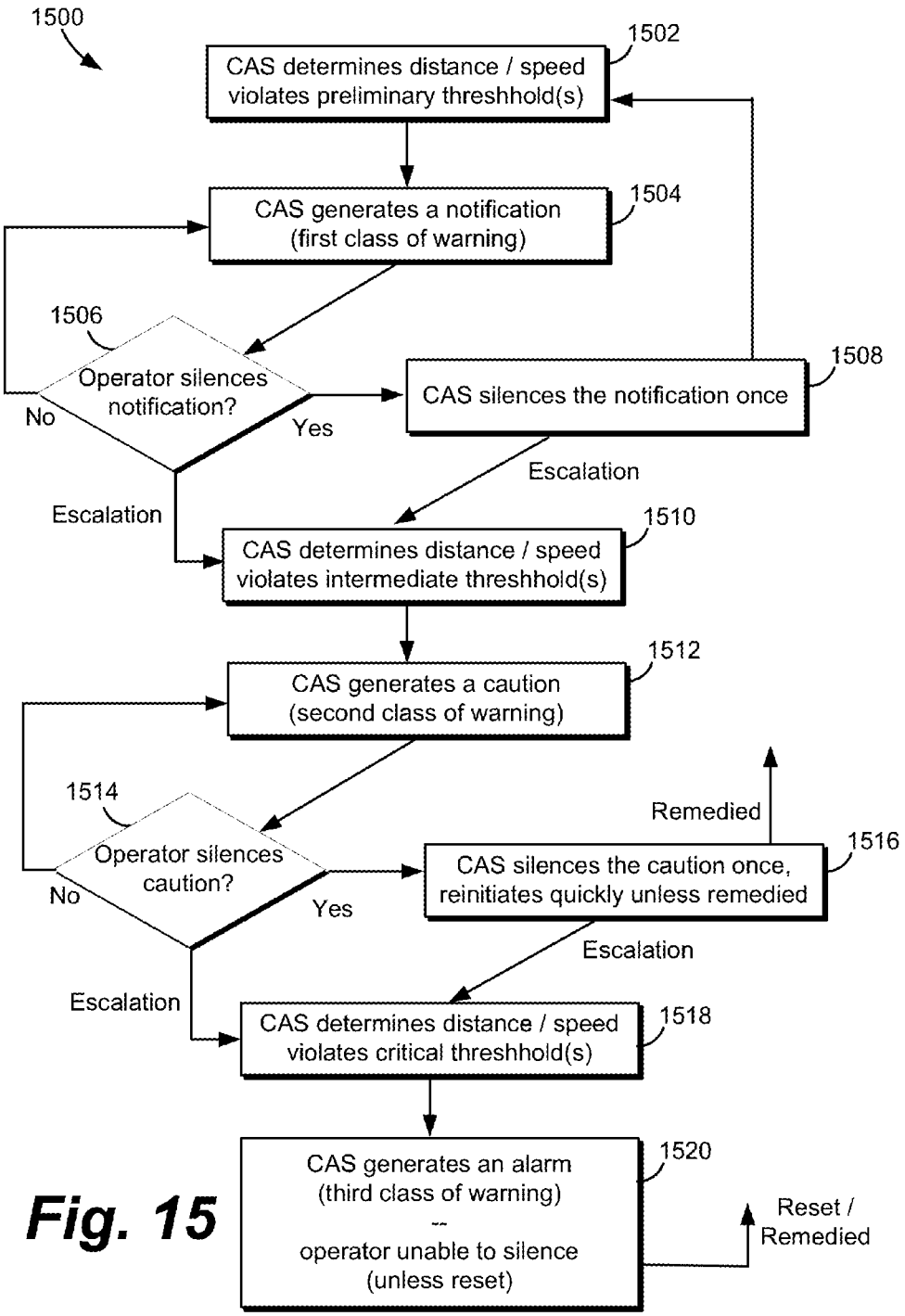
1500
1502
CAS determines distance / speed violates preliminary threshhold(s)
1504
CAS generates a notification (first class of warning)
1506
Operator silences notification?
No
Yes
1508
CAS silences the notification once
Escalation
Escalation
1510
CAS determines distance / speed violates intermediate threshhold(s)
1512
CAS generates a caution (second class of warning)
1514
Operator silences caution?
No
Yes
Remedied
1516
CAS silences the caution once, reinitiates quickly unless remedied
Escalation
Escalation
1518
CAS determines distance / speed violates critical threshhold(s)
1520
CAS generates an alarm (third class of warning) -- operator unable to silence (unless reset)
Reset / Remedied

Fig. 15

COLLISION AVOIDANCE SYSTEM FOR RAIL LINE VEHICLES

CROSS-REFERENCE TO RELATED APPLICATIONS

This application claims priority from U.S. Non-Provisional patent application Ser. No. 13/474,428, filed on May 17, 2012 and issued as U.S. Pat. No. 8,812,227 on Aug. 19, 2014, and the following three U.S. Provisional Patent Applications: (1) Ser. No. 61/519,201 filed on May 19, 2011, (2) Ser. No. 61/627,697 filed on Oct. 17, 2011, and (3) Ser. No. 61/598,750 filed on Feb. 14, 2012. The disclosures of these applications are incorporated by reference herein in their entireties.

FIELD

Certain embodiments of the present disclosure relate to a collision avoidance system for use in the railroad industry. More particularly, certain embodiments of the present disclosure relate to one or more systems, methods, techniques and/or solutions that monitor the location of and separation distance between rail line vehicles, for example, railroad maintenance vehicles.

BACKGROUND

Railroad companies must perform maintenance on their tracks and other infrastructure associated with their rail lines. The railroad companies employ many different types of rail mounted vehicles to accomplish such maintenance, and these vehicles can range widely in their size, weight and shape because the vehicles perform a variety of tasks. These vehicles may be employed in one or more work gangs, each work gang including anywhere from four to forty vehicles. As such, many vehicles may be working in close proximity on a single track.

The speed at which the work gang is traveling, and each vehicle within the gang, can vary widely at any given time. For example, the work gang may be traveling to a work site, in which case the work gang, and each vehicle, is traveling at a higher rate of speed than when the vehicles are working at a worksite. When the vehicles are working at a work site, each vehicle is generally traveling at a lower rate of speed or not at all. Within a work gang, the speeds of the vehicles may vary depending on the task that each vehicle is performing.

Railroads have had several severe collisions and other accidents, some resulting in fatalities, when adequate spacing has not been maintained between rail mounted vehicles. Railroad companies now require that a specific spacing be maintained between vehicles when traveling to/from work sites and when working at a work site.

BRIEF SUMMARY

One or more systems, methods, techniques and/or solutions are provided for a collision avoidance system for use in the railroad industry that may monitor the location of and separation distance(s) between rail line vehicles, for example railroad maintenance vehicles, substantially as shown in and/or described in connection with at least one of the figures, as set forth more completely in the claims.

These and other advantages, aspects and novel features of the present invention, as well as details of an illustrated

embodiment thereof, will be more fully understood from the following description and drawings.

BRIEF DESCRIPTION OF THE DRAWINGS

FIGS. **1**A-**1**C depict illustrations of example rail line vehicles that may utilize a collision avoidance system, in accordance with one or more embodiments of the present disclosure.

FIG. **2** depicts illustrations of example rail line vehicles that may utilize a collision avoidance system, in accordance with one or more embodiments of the present disclosure.

FIG. **3** depicts an illustration of an example collision avoidance system, in accordance with one or more embodiments of the present disclosure.

FIG. **4** depicts an illustration of an example collision avoidance system, in accordance with one or more embodiments of the present disclosure.

FIG. **5** depicts an illustration of an example collision avoidance system, in accordance with one or more embodiments of the present disclosure.

FIG. **6** depicts a block diagram of an example vehicle mounted module, in accordance with one or more embodiments of the present disclosure.

FIG. **7** depicts a block diagram of an example control electronics module, in accordance with one or more embodiments of the present disclosure.

FIG. **8** depicts an illustration of side angled view of the upper portion of an example rail line vehicle and an example component mounting configuration, in accordance with one or more embodiments of the present disclosure.

FIG. **9** depicts an illustration of an example rail line vehicle, including a vehicle mounted module, in accordance with one or more embodiments of the present disclosure.

FIG. **10** depicts a block diagram illustrating example Ultra Wideband units, in accordance with one or more embodiments of the present disclosure.

FIG. **11** depicts an illustration of a side view of an example rail line vehicle including multiple Ultra Wideband units, in accordance with one or more embodiments of the present disclosure.

FIGS. **12**A and **12**B depict illustrations of example user interfaces, in accordance with one or more embodiments of the present disclosure.

FIG. **13** depicts a flow diagram that shows exemplary steps in the operation of a collision avoidance system, in accordance with one or more embodiments of the present disclosure.

FIG. **14** depicts a flow diagram that shows exemplary steps in the operation of a collision avoidance system, in accordance with one or more embodiments of the present disclosure.

FIG. **15** depicts a flow diagram that shows exemplary steps in the operation of a collision avoidance system, in accordance with one or more embodiments of the present disclosure.

DETAILED DESCRIPTION

Previous systems for preventing collisions of rail line vehicles have typically utilized a single sensor, for example a GPS or radar-based sensor, to monitor the approximate location of rail mounted vehicles. A shortcoming of single sensor systems, such as ones that depend on GPS sensors, is that the rail vehicles being monitored often enter into "blackout" areas (for example, around buildings, in the mountains, canyons, around sharp curves or in tunnels) where the single

sensor may be unable to accurately determine the vehicle's location. For example, a GPS sensor may be unable to communicate with satellites when the vehicle is in a tunnel. Some previous systems attempted to solve this problem by performing a simple "dead reckoning" calculation, where the last known speed and direction of the vehicle are used to estimate the current position of the vehicle until the sensor signal is reestablished. This estimation calculation may not be precise enough to prevent collisions in work gangs because of the speed variation between vehicles. When the vehicles are traveling to a work site, the higher speeds introduce the risk of collision, and when the vehicles are working at a work site, the vehicle are frequently stopping and starting, and this variation in speed between vehicles renders the dead reckoning approach an unsuitable approximation.

A limitation of radar-based sensors in particular is that they may initiate numerous false positives (warning alarms that are not warranted). With the normal clutter of maintenance operations (people, equipment, trains on adjacent tracks, trackside structures, trestle sides, tunnel walls), radar-based sensors can become confused as to when vehicles are actually in danger of colliding. More specifically, radar-based sensors must deal with the following dilemma: the sensor must scan a wide enough field so that it can detect collision risks when vehicles are traveling on curves at higher speeds, yet as radar-based sensors scan wider fields, they become more susceptible to false detections, for example because the sensor also senses clutter. False detections can result in a dangerous work environment, especially if operators become immune to warnings.

The present disclosure describes a collision avoidance system (CAS) for rail line vehicles that may utilize a combination of sensor technologies, including an Ultra Wideband (UWB) sensing technology, to counter the limitations of previous systems, and to significantly reduce the potential for vehicle collisions and to enhance the safe operation of a variety of railway vehicles. The present technology is designed to reliably track the location and speed of railway vehicles, as well as the distance between vehicles over a wide variety of track and terrain conditions. The present technology may monitor the separation distance between rail line vehicles by utilizing sensors that are mounted on each vehicle in a group or work gang, where a work gang may comprising a plurality of railway vehicles, including railway maintenance equipment.

The CAS may perform the techniques and/or solutions described herein for a wide variety of railway vehicles, for example, railway maintenance equipment/vehicles, railcars, hyrail vehicles, train cars, train engines and other rail line vehicles. FIGS. **1**A-**1**C depict illustrations of types of example rail line vehicles (vehicles **102**, **104**, **106**) that may utilize a CAS or that a CAS as described herein may track. FIGS. **1**A and **1**B may depict example rail line maintenance vehicles and FIG. **1**C may depict an example hyrail vehicle. FIG. **2** depicts illustrations of more example rail line vehicles (vehicles **202**, **204**) that may utilize a CAS or that a CAS system may track, and also shows an exemplary safe distance **206** between the two vehicles **202**, **204**. The CAS may track vehicles such as the ones depicted in FIGS. **1** and **2** (and others) over a wide range of terrain (e.g., mountains, canyons, hills, trees, tunnels, curves and trestles) and during a variety of weather conditions (e.g., rain, fog, snow, ice, bright sunlight).

The CAS may be designed to introduce redundancy into the system, for example in the form of multiple types of sensor technologies and/or multiple sensors of a particular type of technology. One benefit of utilizing redundant sensors may be that some sensors may function properly when other sensors are not functioning optimally or at all. Another benefit of utilizing redundant sensors is that different sensors may be adapted to sense objects and different distances and to different levels of accuracy. In some embodiments, a CAS may utilize a combination of distance sensors so that the CAS is adapted to detect vehicles that are either close or far away, and so that the CAS may detect vehicle separation to within a few inches if the vehicles are close.

Various embodiments of the present disclosure enable a rail line vehicle having a vehicle mounted module. The vehicle mounted module may comprise a transponder sensor module that includes an ultra wideband unit and a wireless communications antenna. The ultra wideband unit may be operable to detect a distance between the rail line vehicle and at least one other vehicle. The wireless communications antenna may be operable to send and receive data over the air. The vehicle mounted module may further comprise a control electronics module that includes a processor that is in communication with at least the ultra wideband unit. The vehicle mounted module may further comprise a user interface module including a user interface. The user interface may be operable to provide a vehicle operator with information and may be operable to accept input from the vehicle operator. The vehicle mounted module may be in communication with one or more central tracking units by way of the wireless communications antenna. The one or more central tracking units may be operable to track the location of the rail line vehicle and at least one other vehicle.

In some embodiments, the vehicle mounted module further comprises a central tracking unit module that is operable to track the location of at least one other vehicle. In some embodiments, the vehicle mounted module may be operable to utilize information generated by the global positioning system and the ultra wideband unit to determine whether one or more vehicle separation criteria are violated, and generate a warning if one or more vehicle separation criteria are violated. In some embodiments, the vehicle mounted modules comprises one or more additional transponder sensor modules. The vehicle mounted module may be operable to accept calibration information regarding the length of the rail line vehicle and the mounting locations of the transponder sensor module and the one or more additional transponder sensor modules.

In some embodiments, the transponder sensor module further includes a global positioning system. The global positioning system may be operable to receive information from one or more satellites and may be operable to determine the absolute position of the rail line vehicle. In some embodiments, the transponder sensor module further includes one or more of a laser device, a radar sensor and an infrared sensor. In some embodiments, the vehicle mounted modules may comprise an additional ultra wideband unit, wherein an offset exists between the ultra wideband unit and the additional ultra wideband unit once the two units are mounted on the rail line vehicle. In some embodiments, the ultra wideband unit is adapted to transmit and receive signals with varying center frequencies.

In some embodiments, the user interface module further includes a service interface that may be operable to allow the vehicle operator to configure, calibrate, service, maintain, diagnose, update and/or install information on vehicle mounted module. In some embodiments, the user interface is a touchscreen including a screen. The touchscreen may be operable to display one or more screens, menus, options

and/or functions, and accept user input from the vehicle operator by allowing the vehicle operator to touch the screen of the touchscreen.

In some embodiments, the control electronics module further includes one or more interfaces that may be operable to communicate with ground speed detection modules. The ground speed detection modules may include one or more of a microwave radar, a laser device, an infrared sensor and an ultra wideband sensor. In some embodiments, the control electronics module further includes one or more inertial measurement units. In some embodiments, the control electronics module further includes an inertial measurement unit.

In some embodiments, the vehicle mounted module may be operable to utilize a progressive warning feature that generates a warning if one or more vehicle separation thresholds are violated. The rate, frequency, prominence and/or severity of the warning may increase as the violation of the vehicle separation threshold becomes more critical. The progressive warning feature may utilize an adaptive threshold feature that modifies the one or more vehicle separation thresholds based on the speed of the rail line vehicle and the speed of one or more nearby vehicles. In some embodiments, the vehicle mounted module may be operable to utilize a stopping distance calibration feature that measures a stopping distance. The stopping distance may indicate how quickly the rail line vehicle can stop under current conditions. The measured stopping distance may be used to modify one or more safe separation distance thresholds.

Various embodiments of the present disclosure enable a collision avoidance system for rail line vehicles that may comprise one or more vehicle mounted modules, each mounted on a vehicle. Each vehicle mounted module may comprise a transponder sensor module including an ultra wideband unit and a wireless communications antenna. The ultra wideband unit may be operable to detect a distance between the vehicle on which the vehicle mounted module is mounted and at least one other vehicle. The wireless communications antenna may be operable to send and receive data over the air. Each vehicle mounted module may comprise a control electronics module including a processor that is in communication with at least the ultra wideband unit. Each vehicle mounted module may comprise a user interface module including a user interface. The user interface may be operable to provide a vehicle operator with information and may be operable to accept input from the vehicle operator.

The collision avoidance system that may comprise a central tracking unit that is in communication with the one or more vehicle mounted modules. The central tracking unit may be operable to track the location of the one or more vehicle mounted modules. In some embodiments, the central tracking unit may be distributed among the one or more vehicle mounted modules, wherein each of the one or more vehicle mounted modules includes a central tracking unit component. Each central tracking unit component may be in communication with the vehicle's control electronics module. In some embodiments, the central tracking unit may be disposed in a discrete housing.

In some embodiments, the transponder sensor module further includes a global positioning system. The global positioning system may be operable to receive information from one or more satellites and may be operable to determine the absolute position of the vehicle mounted module. Each vehicle mounted module may be operable to utilize information generated by the global positioning system, the ultra wideband unit and the central tracking unit to determine whether one or more vehicle separation criteria are violated, and generate a warning if one or more vehicle separation criteria are violated.

FIG. **3** depicts an illustration of an example collision avoidance system (CAS) **300** for rail line vehicles according to one or more embodiments of the present disclosure. For example purposes only, FIG. **3** depicts a work gang including only two vehicles **302**, **304**. In this embodiment, the CAS **300** includes four main types of components—transponder sensor modules (TSMs) (for example, TSMs **306**, **308**), control electronics modules (CEMs) (for example, CEMs **310**, **312**), user interface modules (UIMs) (for example, UIMs **314**, **316**) and a central tracking unit (CTU) (for example, CTU **318**). Referring to a single vehicle (vehicle **302** for example), modules that are located in or on the vehicle (for example, TSM **306**, CEM **310** and UIM **314**) may collectively be referred to as the vehicle mounted module (VMM), even though the individual modules and related components may or may not be housed within a unitary package/enclosure.

In some embodiments, the VMM components may not be installed on vehicles at production. In these examples, the VMM components may be designed to allow retrofitting into existing railway vehicles without requiring heavily intrusive installation.

The CAS may include a central tracking unit (CTU), for example the CTU **318** of FIG. **3**. The CTU may operate to centrally track all the vehicles in one or more work gangs. The CTU may adapt a tracking software and/or system to monitor individual vehicles. The CTU may include technology adapted to dynamically define which vehicles are in a work gang, and/or which vehicles the CTU should keep track of. The CTU may accept information from VMMs mounted inside vehicles in the work gang, information such as location, speed, separation distance and the like. The CTU may have the ability to analyze and/or store various types of data about vehicles in one or more work gangs. For example, the CTU may analyze absolute and relative positioning data and speed data from vehicles in the work gang. In some examples, the CTU may determine if a separation distance between two vehicles has been violated, indicating that an accident may be likely. Additionally, the CTU may track alarm status of the vehicles in a work gang so that the central tracking unit becomes aware when an accident may have occurred. In another example, the central tracking unit may track data regarding accidents.

In the embodiment depicted in FIG. **3**, the CTU **318** may be located in a discrete housing **320** (also referred to as a module, unit, bungalow or the like). It should be understood that the technology and features of the CTU need not reside in such a discrete housing **320** and may be distributed amongst the vehicles in the work gang, for example with a CTU module/component in each VMM. In embodiments where the CTU is located in a housing **320** that is discrete from the vehicles, the VMM may include a TSM, CEM, and UIM. In embodiments where the CTU is distributed amongst the vehicles, the VMM may further include a CTU module/component.

FIG. **4** depicts an illustration of an example collision avoidance system (CAS) **400** according to one or more embodiments of the present disclosure. In this embodiment, the system **400** does not include a discrete housing for the CTU technology. This embodiment still utilizes technology, functionality and features similar to those employed in a system (such as the CAS **300** of FIG. **3**) with a CTU disposed in a discrete housing. In this embodiment, the functionality and intelligence of the CTU is dispersed and/or distributed among the VMMs (for example VMMs **402**, **404**) in the vehicles within a work gang. With this dispersed design (also referred

to as "dispersed thinking"), each VMM includes its own CTU module/component that tracks the location of other vehicles in the work gang, like a CTU disposed in discrete housing would do. It should also be understood that although this embodiment describes a central tracking unit component, the central tracking unit circuitry and technology may be incorporated into other components/subcomponents of the VMM, such as the CEM.

For example purposes, FIGS. **3** and **4** each show a work gang including only two vehicles, but it should be understood that work gangs may include more than two vehicles. FIG. **5** depicts an illustration of an example collision avoidance system (CAS) **500** with a work gang that includes more than two vehicles, according to one or more embodiments of the present disclosure. In this embodiment, each vehicle (for example, vehicles **502**, **504**, **506**) in the work gang may be equipped with a VMM and each VMM may communicate with nearby VMMs (in nearby vehicles) as well as with a CTU **518** in a discrete housing, as can be seen in FIG. **5**. In other embodiments of the present disclosure, each vehicle in a work gang is equipped with a VMM and each VMM communicates with nearby VMMs (in nearby vehicles) including a CTU module/component within each VMM (not depicted in FIG. **5**). In these embodiments, there may be no CTU in a discrete housing such as the CTU **518** depicted in FIG. **5**. FIG. **5** depicts a work gang with three vehicles, but it should be understood that a work gang may include more than three vehicles. As the size of the work gang becomes larger, the VMM mounted on each vehicle may communicate with more VMMs (in nearby vehicles), as well as with the CTU in a discrete housing (or a CTU module/component within the VMMS in each vehicle).

FIG. **6** depicts a block diagram of an example vehicle mounted module (VMM) **600**, in accordance with one or more embodiments of the present disclosure. The VMM may include one or more control electronics modules (CEM) **602**, one or more transponder sensor modules (TSM) **604**, and one or more user interface modules (UIM) **606**. The TSM **604** may further include a wireless communications antenna **608** (for example an RF antenna such as a 2.4 GHz radio antenna) that is operable to send and receive data over the air, for example to/from remote systems. The TSM **604** may further include a GPS unit **610** one or more vehicle communication devices **612**. The UIM **606** may further include a user interface **614**, a service interface **616** (optionally including diagnostics components/interfaces) and status/fault indicators **618**. Additionally, the VMM **600** may receive power from a power supply **640** that may provide power to one or more vehicle mounted module components, for example components disposed within the CEM **602**.

Wireless communications antenna **608** may be, for example, an RF antenna such as a 2.4 GHz radio antenna. As depicted in FIG. **6**, a VMM **600** may communicate with a CTU **630** (for example a CTU located in a discrete housing or a number of CTU modules located in other VMMs) through a wireless communications antenna **608**. The wireless communications antenna **608** may be housed in the TSM, or it may be housed separately and perhaps connected to CEM **602** independently. The circuitry for the radio associated with the wireless communications antenna **608** may be disposed in the TSM **604**, or may be disposed in the CEM **602** and be connected to the wireless communications antenna **608** via a wired connection. The VMM **600** may transmit a variety of information to the CTU **630**, for example, absolute position data, relative position data and speed data of the vehicle. Such information may have been obtained by the VMM utilizing various components and/or sensors, for example, the GPS unit **610**, the UWB unit **620**, and/or other sensors. The VMM **600** may transmit other information to the CTU **630**, for example, status/fault and/or diagnostic information regarding the health of the VMM and its components. The VMM **600** may gather data from one or more satellites **634** utilizing a GPS unit **610**, for example to acquire absolute positioning information. The VMM **600** may communicate with other CAS/VMM-equipped vehicles through one or more vehicle communication devices **612** and/or through a wireless communications antenna **608**. In some embodiments, the vehicle communications devices **612** may include one or more separate wireless communications antennas (and perhaps associated radios) from antenna **608**.

Referring to FIG. **6**, in some embodiments, a CAS may not include a discrete CTU such as the one shown in FIG. **6** at CTU **630**. In these embodiments, the VMM may include a CTU module/component **631** that tracks the location of (and provides location information to) other vehicles in the work gang by communicating with other CAS/VMM-equipped vehicles directly. The CTU module/component **631** may operate like (and include similar technology to) a discrete CTU (such as CTU **630**) would operate in other embodiments. The CTU module/component may include technology adapted to dynamically define which vehicles are in the work gang, and/or which vehicles the CTU module/component should keep track of. It should also be understood that although the foregoing describes a CTU module/component, the CTU circuitry and technology may be incorporated into other modules, components and subcomponents of the VMM, such as the CEM. In some embodiments, the CTU module/component may be a software feature that is executed by a processor in the CEM.

VMM subcomponents (for example, the components included within the TSM, CEM and UIM) may be packaged together within a single enclosure. For example, in some embodiments, the CEM and UIM (and optionally, the CTU module) may be combined/disposed in a single package. One benefit of a single package may be that it simplifies the installation process. In alternate embodiments, or one or more VMM components and/or subcomponents may be packaged separately from the other components/subcomponents. The various components and/or subcomponents may be located separately, optionally within separate enclosures, and each separate component may be connected to a main VMM enclosure and/or to other VMM enclosures via wires or a short range wireless link. For example, wireless communications antenna **608** and/or one or more vehicle communication devices **612** may be mounted separately (optionally, in one or more enclosures) on the upper extremity of the vehicle, for example to reduce signal interference and to allow for proper antenna placement (see FIG. **8**). Likewise, the user interface **614** may be located in the crew area or the passenger cab. The number of physical packages/enclosures included in each VMM and the mounting location of each package/enclosure may depend on the type (height, length, etc.) of vehicle the VMM is mounted on, or may depend on the configuration of the VMM. In one example, all of the components of the vehicle mounted module are housed within a single weatherproof enclosure. In another example, the wireless communications antenna (for example, wireless communications antenna **608**) (or the entire wireless communications radio including the antenna) may be installed at a distance from other VMM enclosures/components to avoid interference between the wireless communications antenna and other components of the VMM, for example the UWB sensor.

FIG. **7** depicts an illustration of a block diagram of an example control electronics module (CEM) **700**, in accor-

dance with one or more embodiments of the present disclosure. The CEM **700** may include a processor **702**, a wireless communications radio **704** (such as an RF radio), an interface to a TSM **730**, an interface to a UIM **720**, one or more interfaces **706** to ground speed detection modules, a power supply interface/power conditioning system **708**, and a real-time clock **714**. Examples of ground speed detection modules that may connect to interface **706** include an encoder module **750**, a microwave radar **752** and/or a laser device **754**. The interface to the UIM **720** may further include one or more drivers to power visual and/or audio indicators. In some embodiments, the CEM **700** may include one or more vehicular interfaces (interfaces to existing vehicle systems), for example a CAN interface, braking systems, speed indicators, equipment operating mode status indications and the like. The CEM **700** may include an inertial measurement unit **710** that includes one or more devices, for example, one or more accelerometers and/or gyroscopes. The CEM **700** may include a log/memory **712**.

It should be understood that although FIG. **7** depicts some or all of the aforementioned subcomponents as being contained within the CEM **700**, different configurations of the VMM are contemplated by this disclosure, including various combinations of VMM components/enclosures. Therefore, in some embodiments, the subcomponents depicted in FIG. **7** may be disposed outside of the CEM **700**, for example in one or more other VMM enclosures. And in other embodiments, subcomponents other than those depicted in FIG. **7** may be disposed inside of the CEM **700**, for example one or more subcomponents that may reside in other VMM enclosures in other embodiments. In some examples, some of the subcomponents depicted in FIG. **7** may reside in the UIM and/or the TSM and may connect to the CEM by way of wires or wireless connection(s).

Referring again to FIG. **7**, CEM **700** may include a processor **702**. The processor **702** may, among other operations, process information received from the vehicle communication devices, for example via the interface to the TSM **730**. For example processor **702** may be in communication with and process information from a UWB unit via TSM interface **730**. The processor **702** may also process information received from other modules, components and/or subcomponents of the VMM. The processor **702** may handle information and/or perform computations to, among other things, track other vehicles in a work gang and determine which vehicles present a potential hazard. It should be understood that the CTU may also process location and speed information from vehicles in a work gang and may also track vehicles in a work gang to determine when collisions may be imminent. The present disclosure contemplates various types of configurations whereby some or all of the tracking and processing components of the CAS may be located within the VMMs (for example, within a CTU module), within a CTU in a discrete housing, or a combination of both. In the example where a CTU module/component performs tracking of other vehicles, a CTU module **703** may be disposed within the CEM **700**, perhaps implemented in processor **702**. In some embodiments, the CTU module **703** may be a software feature that is executed by the CEM processor **702**.

CEM **700** may include an inertial measurement unit **710** that includes one or more devices, for example, one or more accelerometers and/or gyroscopes. The inertial measurement unit **710** may be operable to, among other functions, detect changes in the speed of a traveling vehicle. Detecting changes in vehicle speed may be useful to aid in dead reckoning solutions instead of or in conjunction with short range distance measurement sensors. For example, if a vehicle travelled into a tunnel and the GPS unit could not establish a connection to satellites to provide positioning information, an inertial measurement unit may provide information regarding whether vehicles in a work gang have changed speeds while in the tunnel. An inertial measurement unit **710** may also be operable to detect sudden changes in speed, for example indicating that a vehicle was involved in a collision, or perhaps indicating some other event. The inertial measurement unit **710** (or some other VMM component) may then store/log data regarding the activities of the vehicle (and/or VMM components) surrounding the time of the event, similar to the way a flight recorder records events proximate to a plane crash. This recording component may collect information from the inertial measurement unit **710** and/or from other VMM components, for example from a UWB unit.

CEM **700** may include a real-time clock **714**. The real-time clock **714** may provide accurate (optionally, synced) time readings, for example to facilitate development evaluation testing. The time and date of the real-time clock may be adjusted automatically, for example by receiving updates from a GPS unit via TSM interface **730**. The time and date of the real-time clock may be adjusted by receiving change requests from the service interface or user interface via UIM interface **720**. In one example, the real-time clock **714** may exhibit an accuracy of plus/minus 5 seconds per day at 25 degrees Celsius.

The CEM **700** may be mounted in or near the vehicle cab. For example, if the CEM **700** is packaged with a UIM, the CEM may be mounted in the cab near an operator. In other examples, the CEM may be mounted on an upper frame or part of the vehicle, for example within the vicinity of the TSM. For example, if the CEM is packaged with one or more components of the TSM, a higher mounting location may reduce interference for TSM modules, for example the GPS unit and/or UWB unit. The CEM may be packaged with the TSM in shorter vehicles for example. In some embodiments, it may be beneficial to package the CEM separately from the TSM. In one particular example, the CEM may be mounted directly below the TSM, were the TSM is disposed above or on the roof of the vehicle (see FIG. **8**) and the CEM is disposed below the roof of the vehicle, for example fixed to the inner ceiling of the vehicle. In this example, the CEM may be sheltered from direct exposure to sunlight and the components of the TSM may experience minimal interference and a clear line of sight.

The CEM **700** may interface (for example via a power supply interface **708**) with a power supply **760**. The power supply interface **708** may include a power conditioning system. In one example, all power for the VMM components and subcomponents passes through the power supply interface/conditioning system **708** located in the CEM, and then power for the other VMM components is routed out from the CEM. In other examples, one or more VMM components may include their own power conditioning systems and may accept power from a power supply without receiving power that is channeled through the CEM. The power supply may be the same as the vehicle's power supply, for example a 12 VDC or 24 VDC power supply. Alternatively or in addition, the VMM may include an independent power supply such as a battery, solar panels, and the like.

Referring again to FIG. **6**, VMM **600** may include a transponder sensor module (TSM) **604**. In some implementations of the VMM, one or more components of the TSM **604** may be packaged with the CEM **602**. In other implementations, it may be beneficial to package one or more TSM components separately from other VMM components, for example on an upper extremity of a vehicle. FIG. **8** depicts an illustration of

side angled view of the upper portion **802** of an example rail line vehicle (for example a vehicle similar to the vehicle of FIG. **1**C) and a mounting configuration **804** for one or more components of a TSM, in accordance with one or more embodiments of the present disclosure. One or more TSM components may be mounted at a high point (for example, the highest point) on the vehicle, where a clear line of sight may be established between the TSM components and an area to the front and rear of the vehicle.

In the example shown in FIG. **8**, the wireless communications antenna **806** (for example, similar to the wireless communications antenna **608** of FIG. **6**) and a UWB unit **808** (for example, similar to the UWB unit **620** included in the one or more vehicle communication devices **612** of FIG. **6**) may be mounted separately from other VMM enclosures. In this example, the wireless communications antenna **806** and UWB unit **808** may be mounted on the upper extremity **810** of the vehicle to reduce signal interference and to allow for proper antenna placement. It should be understood that FIG. **8** depicts only one example of TSM components that may be mounted on the upper extremity of a vehicle. More or less TSM components (or other VMM components) than are shown in FIG. **8** may be mounted on the upper extremity of a vehicle. For example, components that may be mounted on the upper extremity of a vehicle may include the UWB unit, wireless/RF antennas and/or radios, GPS units, infrared sensors and the like.

TSM components (and/or other VMM components) may be installed on the upper extremity of a vehicle by a variety of means. Referring to FIG. **8**, for example, a hole may be drilled through the side of an upper portion **802** of a vehicle or through the roof **810** to allow hardware to thread through the vehicle's upper portion **802** and also through VMM components to fix the components to the upper portion. Additionally, brackets, flanges, sockets or other hardware may be used to fix components to the upper portion **802**. For example, FIG. **8** shows a bracket **814** that may be used to fix a UWB unit to the upper portion **802**. The bracket **814** may be fixed to the upper portion **802** of a vehicle and the UWB unit may be fixed to the bracket. Brackets may aid in attaching components to the upper portion **802**, and/or they may elevate components so that the components experience increased line of sight and decreased interference. One or more holes may be drilled through the roof **810** or a side wall of upper portion **802** to allow the passage of interface cables (for example, cable(s) **812** of FIG. **8**) into and/or out of the cab of a vehicle.

FIG. **9** depicts an illustration of an example rail line vehicle **900**, including a VMM that includes more than one TSM, in accordance with one or more embodiments of the present disclosure. In some embodiments of the disclosure, the VMM in a rail line vehicle may include more than one TSM, or may include more than one group of TSM components mounted on the upper extremity of a vehicle. With regard to the disclosure herein, when a description explains the configuration and/or benefits of multiple TSMs, it should be understood that the entire TSM may not be duplicated. Instead, one or more components of the TSM may be duplicated, while there may be a single instance of other components of the TSM. For example, the VMM may include duplicated vehicle communication devices, such as two or more UWB units. Additionally, while the disclosure herein may describe two TSMs, some embodiments may include VMMs with more than two TSMs.

Referring to FIG. **9**, a VMM installed in a vehicle **900** may include two TSMs **902**, **904** (or two groups of some TSM components), for example mounted at either end of the vehicle **900**. As shown in the example of FIG. **9**, the two TSMs **902**, **904** may be mounted at the extreme (or near extreme) front and rear ends of the vehicle **900**. Placing sensors, for example sensors included in TSMs **902**, **904**, at the extreme ends of a vehicle may improve the accuracy of some sensors, for example sensors that measure distance between vehicles (such as UWB sensors or infrared sensors). Especially if the vehicle **900** is long, a distance sensor (for example a sensor included in TSM **904**) that is placed near the end of a vehicle may more accurately calibrate itself to determine the exact location of the end of the vehicle **900**, and thus the sensor may be able to determine more accurately the distance between the end of the vehicle **900** and other vehicles. The two TSMs **902**, **904** may be connected to a single CEM **906**, which may be connected to a single UIM **908**. In other embodiments, the VMM may include more than one CEM and/or more than one UIM.

When a VMM-equipped vehicle is initialized to operate with a CAS, the VMM components of the vehicle may be calibrated (also referred to as "commissioning" the vehicle) to the particular installation configuration for that vehicle. Calibration may include an operator specifying the vehicle length in each direction from the one or more mounted TSMs. Rail line vehicles (for example, maintenance vehicles) can range in length (see FIG. **1**), for example from 12 feet to 80 feet, and the vehicles can have a variety of cab locations and configurations. Given the different lengths and configurations of vehicles, it may be necessary to program information into various components of the VMM, including the TSM and/or the CEM, such that the components are aware of (and/or can compute) the distance between the component's mounting location and the ends of the vehicle.

In some embodiments of the disclosure, circuitry within the VMM (for example in the CEM) may automatically compensate (calibrate) for the length of the vehicle and the mounting location. In one example, the VMM may include a single TSM, and the TSM may be mounted on the vehicle (for example, at the front or center of the vehicle), and circuitry within the VMM (for example in the CEM) may automatically compensating for the length of the vehicle and the mounting location. In another example, the VMM may include multiple TSMs, and the TSMs may be mounted on the vehicle (for example, near the front and rear of the vehicle), and circuitry within the VMM (for example in the CEM) may automatically compensating for the length of the vehicle and the mounting location of the multiple VMMs. The sensors may be designed to adjust for the size of the equipment and specific location of the components. The present disclosure contemplates various methods and solutions to adjust settings of VMM's components at initial installation to aid in component awareness. Components may contain smart technology that aids in the component's calibration. The VMM components may also be operable to account for a length of a vehicle that may change on the fly. For example, some vehicles change length when retractable sections are extended. The VMM components may be designed to accommodate this change in length, either by manual user input or automatic detection of the vehicle configuration.

Referring again to FIG. **6**, the TSM **604** may include one or more vehicle communication devices **612**. It should be understood that throughout this disclosure, when reference is made to vehicle communication devices, there may only exist a single vehicle communication device, for example just a UWB unit. In other examples, there may be more than one vehicle communication device. Vehicle communication devices **612** may be packaged together, or they may be packaged independently, or they may be packaged with other TSM components. The vehicle communication devices **612** may be

in close communication with the CEM **602** via either a wired connection or a short range wireless connection. One benefit of a wired connection is that the CEM, which may contain a power conditioner unit and an interface to a power supply, can provide power to the vehicle communication devices, along with communication functions.

The vehicle communication devices **612** may communicate wirelessly with other CAS/VMM-vehicles **638** in the work gang. The vehicle communication devices **612** may be operable to, among other functions, determine the relative location of other CAS/VMM-equipped vehicles in relation to the present vehicle. The vehicle communication devices **612** may utilize one or more communication technologies and may include one or more integrated antennas for sending and receiving signals to and from other vehicles. In one example, each vehicle may have a unique identification code that was assigned when the VMM was installed in the vehicle, or before or after such installation.

In some embodiments of the present disclosure, the vehicle communication devices **612** may include an Ultra Wideband (UWB) unit **620** to communicate with other VMMs. In one specific example, the UWB unit **620** is the only vehicle communication device. The UWB unit may include a control board, a data interface and/or a UWB antenna. The UWB unit **620** is typically adapted for sending signals to and/or receiving signals from UWB units mounted on/inside other vehicles. The UWB unit **620** may be adapted to measure the relative separation distance between properly equipped vehicles without becoming confused by interference from nearby stationary or unrelated off-track equipment that might otherwise cause false alarms in radar-based collision avoidance systems.

FIG. **10** depicts a block diagram illustrating example UWB units, in accordance with one or more embodiments of the present disclosure. Pulses emitted from a UWB transmitter may spread in many directions. A UWB unit may transmit and receive pulses that are communicated directly **1002** between UWB units (for example between a UWB transmitter/transceiver **1008** and a UWB receiver/transceiver **1006**), and/or the UWB unit may transmit and receive pulses that have been reflected **1004** (bounced) off of an object and/or surface, for example the ground. A UWB unit may be capable of resolving multipath reflections from a main signal by focusing on the first arriving pulse. Additionally, the UWB technology may take advantage of the fact that radio waves/pulses travel at a particular velocity. By measuring how long it takes a wave/pulse to travel (for example by reflecting/bouncing) between two transceivers, the distance between the UWB units can be accurately determined. This technique may be referred to as "Time of Flight" (TOF). In existing wireless radio technologies, TOF calculations have previously had limitations due to the reflection of radio waves from the wide range of objects in the vicinity. These reflections may result in the receipt of numerous conflicting signals of varying amplitudes, and in some instances one or more signals may cancel each other out, a phenomena referred to as "multi-path distortion". This may result in inaccurate distance determinations because a direct wave may have been cancelled out, and a reflected wave may travel a longer path and appear to be the first arriving pulse, resulting in a false (longer than actual) separation distance measurement.

A UWB unit may utilize a high bandwidth pulsed distance-measurement technology. A UWB transceiver may utilize a broad spectrum of frequencies simultaneously at a relatively low power levels. A UWB unit may be operable to periodically transmit short duration pulses, such as RF pulses. For example, a UWB unit may measure a distance of several hundred feet with a resolution of several inches. Precise range determination may be advantageous, for example when vehicle separations are small and/or when a potential GPS measurement error becomes significant. In one example, a GPS measurement error may be 10-15 feet. Additionally, each pulse transmitted by a UWB unit may be coded and the phase of the pulse may be modulated and the pulse repetition rate may be variable. Thus, a UWB unit may measure separation distances more accurately and be less susceptible to interference from geographic conditions and less susceptible to multi-path distortion than are other wireless technologies.

A UWB unit may transmit one or more signals that may be pseudo-randomly (and uniquely) encoded with low-amplitude RF energy spread over a 2 GHz bandwidth. The transmitted signal may be spread out over such a wide range of frequencies that the transmissions appear like normal background atmospheric noise. As a result, the signal is unlikely to cause interference with other communications systems. This encoding also means that information may be transmitted with the range finding signal, such that data communication may be accomplished while distance measurement is performed. In other words, the UWB unit may be adapted to transmit data to other UWB units in addition to detecting the distance to other UWB units. In effect, the two functions (data and distance) may be performed at the same time using the same wireless link because the UWB unit may transmit data, and then additionally, distance information may be computed by determine how long it took for the data to travel from one UWB unit to the other. It should be understood, however, that the two functions (data and distance) need not be performed at the same time.

The UWB unit may be adapted to send data as well as determine distance between vehicles. Because the UWB unit may be utilized to send data, some embodiments of the present disclosure, for example those where a central tracking component resides in the vehicle mounted module, may not need to use any other type of wireless or RF technology to communicate. This could reduce the technology components required in the system, reducing cost of the system. However, in other embodiments, a VMM may benefit by utilizing more than one data link (wireless technology capable of transmitting data). For example, a wireless RF link may provide a greater distance/range for sending data than a UWB unit, and because of this benefit and potentially other benefits of various types of data links/wireless technologies, a VMM may benefit by utilizing more than one type of data link Additionally, a collision avoidance system may have multiple data links in order to introduce redundancy into the system. For example, the UWB unit may be capable of sending data if the RF link is not functioning properly, and vice versa.

One example of a UWB technology that the CAS may utilize is the technology described in the White Paper published by Time Domain entitled "Time Domain's Ultra Wideband (UWB): Definition and Advantages," which is incorporated by reference in its entirety herein. However, it should be understood that the collision avoidance system may utilize other designs and types of UWB technologies besides just the one described in the White Paper.

The UWB unit may be operable to measuring the vehicle separation independently. Thus, in various embodiments of the CAS, the UWB unit may replace the GPS unit, or the UWB unit may work in conjunction with the GPS unit. As explained above, the CAS may be designed to include redundancy in the system, for example in the form of multiple types of sensor technologies and/or multiple sensors of a particular type of technology. One benefit of utilizing redundant sensors may be that some sensors may function properly when other

sensors are not functioning optimally or at all. For example, a GPS sensor may not communicate well with satellites when a vehicle is in a tunnel, and thus the GPS unit may not provide adequate information to the CAS in this situation. However, in this situation, the UWB unit (or other sensors/technologies) may be fully functional. For example, tests have been performed in tunnels that stretch up to 1 mile in length (or longer), and the tests have shown that a properly configured UWB unit may accurately measure distance and relative speed of vehicles in such a tunnel. UWB sensors (and/or other non-GPS type sensors) may also work in conjunction with a GPS sensor. For example, a UWB sensor may provide better resolution (i.e., can measure separation distance at finer increments, more accurately) and the GPS sensor may provide a location/separation information over a greater area.

Referring again to FIG. **6**, once a UWB unit determines distance information, it may communicate this data to a CTU **630**, for example via wireless communications antenna **608**. Wireless communications antenna **608** may be an RF antenna, for example a 2.4 GHz radio antenna. In other embodiments, where there is no CTU in a discrete housing, UWB distance data (an optionally other data) may be communicated to CTU modules in other VMMs via wireless communications antenna **608** and/or a separate wireless communications antenna located in the TSM **604**. In embodiments where the UWB unit is adapted to operate in conjunction with a GPS unit, combined GPS and UWB distance data may be communicated between a vehicle and the CTU **630** and/or between vehicles in the work group via similar wireless communications antennas/technologies as described herein.

FIG. **11** depicts and illustration of a side view of an example rail line vehicle including multiple UWB units (or multiple UWB components), in accordance with one or more embodiments of the present disclosure. In some embodiments, a VMM installed on a vehicle **1102** may include more than one UWB unit (for example, UWB units **1104**, **1106**), for example to introduce redundancy into the system. In some embodiments, a VMM installed on a vehicle **1102** may include more than one UWB antenna, and the multiple UWB antennas may share a common control board and/or data interface. When present disclosure describes multiple UWB units, it should be understood that the entire UWB unit may be duplicated or one or more components of the UWB unit may be duplicated, for example the UWB antenna. In some embodiments, multiple UWB units (or multiple UWB components) may be housed in a single enclosure. In other embodiments, multiple UWB units (or multiple UWB components) may be housed in separate enclosures, as depicted in FIG. **11**.

In some situations, when a UWB pulse is reflected from an object or a surface (for example the ground), the UWB pulse may be destroyed (for example, by a reflected signal which is the same amplitude but 180 degrees out of phase) or altered before it gets to the UWB receiver, and/or other interference may cancel out a pulse. These situations where a UWB link might not transmit a pulse ideally may be referred to as "holes." In some embodiments, the VMMs may include more than one UWB unit (or UWB component), for example in case one UWB pulse is destroyed. In some examples, two UWB units (or two UWB antennas) may be mounted on a single vehicle with a small offset between the UWB antennas. For example, referring to FIG. **11**, two UWB units (or two UWB antennas) **1104**, **1106** may be mounted on a single vehicle **1102** with a small vertical distance **1108** between the UWB antennas. In this example, pulses **1110**, **1112** from the two UWB units **1104**, **1106** (respectively) may arrive at a UWB receiver of another vehicle after traveling slightly different distances (for example, because they reflected off the ground at different angles). Multiple/redundant UWB units may increase the probability that whatever surface and/or interference destroyed or altered one UWB pulse will not interfere with the second UWB pulse. In some examples, two UWB units (or two UWB antennas) may be mounted on a single vehicle with a small horizontal distance between the UWB antennas. The horizontal offset may provide information to the VMM to determine the orientation of nearby vehicles in relation to the immediate vehicle. For example, UWB unit information may show that a nearby/target vehicle that is in front of the immediate vehicle is closer to a front UWB antenna, and likewise for a rear vehicle/rear UWB antenna.

In some embodiments, one or more UWB units may be operable to transmit/receive signals with varying center frequencies. This multiple center frequency technique may work with a single UWB unit or it may work with multiple UWB units. In a single UWB unit example, the UWB controller may utilize adaptive output filters. The UWB unit may include a single UWB transceiver that is adapted to send multiple pulses/signals with different center frequencies at different times, for example alternating between modes (center frequencies). A corresponding UWB receiving unit may be synchronized with the UWB unit sending the signals, in that it may receive pulses/signals with different center frequencies at different times. In a multiple UWB unit example, one UWB unit may send signals at one center frequency and another UWB unit may send signals at a different center frequency. Variations in the center frequency of the UWB signals may result in a different phase delays of the signals, for example when reflected. If one signal has been significantly altered or destroyed by a reflection, another signal(s) (which utilizes a different center frequency) may be unaffected, or at least less affected, by the reflection. This may be because different frequency signal(s) over the same reflection path length may experience a different phase delay. This approach may improve the reliability of UWB communications under certain operating conditions.

Referring to FIG. **6**, in some embodiments, the vehicle communication devices **612** may include other wireless communication devices/technologies (beyond or in replacement of a UWB unit) to communicate with other VMMs. In some embodiments, a VMM may utilize a wireless communications antenna/radio (for example, an RF antenna/radio) to communicate with other VMMs. In some embodiments, the same wireless communications antenna **608** that communicates with a CTU **630** may communicate with other VMMs. In some embodiments, the vehicle communication devices **612** may include an ultrasonic or short distance laser device. Some example ultrasonic or short distance laser devices can sense distances between zero and thirty feet. In yet other examples, the vehicle communication devices may utilize radar, infrared (IR), and/or optics technologies.

Referring again to FIG. **6**, a TSM may include a Global Positioning System (GPS) unit **610**. The GPS unit **610** may be incorporated to the TSM. In some embodiments, the GPS unit **610** may be packaged with one or more vehicle communication devices **612**, or it may be packaged in the CEM. Alternatively, the GPS unit **610** may be housed separately or may be incorporated into other VMM components or subcomponents. The GPS unit may include either an integrated or separate antenna assembly.

The GPS unit **610** may be adapted to determine the absolute position and speed of a vehicle that is equipped with the GPS unit. Information/data generated by a GPS unit may

allow real-time determination of vehicle velocity and location. This information/data may allow a GPS unit **610** to determine expected vehicle stopping distances and may enable logging of equipment location with respect to time and date. For example, absolute location information provided by a GPS unit **610** may be useful to track the work performed by a work gang. A GPS unit may also provide distance information regarding the distance between two GPS-equipped vehicles.

Some GPS-based systems may experience reduced accuracy at times or may lose all connection with satellites, for example, when a vehicle enters a deep valley or a tunnel. A GPS unit may provide distance information in conjunction with other technologies that provide distance information (for example, UWB, infrared) as a form of redundancy and/or to offer a variety of distance measurement ranges and precision. A GPS unit may be operable to determine vehicle position within a wider range, for example 10 to 15 feet. A GPS unit may allow for the determination of distances between vehicles that are too far apart for other types of distance detection technologies to function accurately. Then, other technologies, for example a UWB unit, may provide a more precise distance measurement, for example a distance within 6 inches. The accuracy of a GPS unit **610** may be enhanced by utilizing a WAAS (Wide Area Augmentation System), a system of ground reference stations across North America that provide GPS signal corrections. Corrections provided by a WAAS may improve the positioning capability of the GPS unit **610**, for example by a factor of five, such that the location may be determined as accurately as within 2 to 3 feet.

Referring to FIG. **6**, the VMM may include one or more user interface modules (UIM) **606**. A UIM **606** may further include a user interface **614**, a service interface **616** (optionally with diagnostic components/interfaces) and status/fault indicators **618**. A UIM **606** may provide an operator with an interface by which the operator can engage with the technologies that are part of the VMM, and by which the operator may be alerted of events, for example if vehicle separation criteria are violated. A UIM may be located/mounted within convenient reach and view of the operator, and may be connected by an interface cable (or short range wireless connection) to other VMM modules, for example the CEM. For example, the UIM may be mounted in a vehicle cab in order to allow the operator to see and hear warning and alarm indications.

Status/fault indicators **618** may alert an operator that one or more VMM components and/or subcomponents are not operating in an optimal manner. In some embodiments of the present disclosure, the VMM components may be operable to "self-monitor," meaning they may be adapted to monitor their own operation and health. If a VMM detects degraded or non-optimal performance (for example regarding any of the sensors or other VMM components or subcomponents), the status/fault indicators **618** may alert an operator. In some embodiments, the VMM may communicate status/fault indication to the CTU (or CTU module(s), for example via a wireless communications antenna, for example wireless communications antenna **608**.

FIGS. **12**A and **12**B depict illustrations of example user interfaces, in accordance with one or more embodiments of the present disclosure. The UIM may include a user interface. Referring to FIGS. **12**A and **12**B, it can be seen that a user interface (for example user interfaces **1202**, **1204**) may include one or more means of alerting an operator of events, for example if vehicle separation criteria are violated. FIG. **12**A shows one example of a user interface **1202**. In this example, the user interface **1202** may include one or more visual indicators **1206**, one or more audible indicators **1208**, one or more switches/buttons **1210**, **1212**, **1214**, and/or other input means or alerting means. Examples of visual indicators **1206** are lights, lamps, alpha-numeric character displays, LED's and the like. These indicators may provide an operator with information regarding the technologies included in the VMM, and certain indicators may alert the operator when an event occurs, for example when separation parameters (between vehicles for example) are exceeded. Examples of audible indicators **1208** are variable characteristic audible indicators, buzzers, alarms, sirens, horns and the like. The user interface **1202** may include one or more interface switches/buttons **1210**, **1212**, **1214** that may be adapted to allow an operator to configure and/or interact with components of the VMM. For example switches may be adapted to activate and deactivate component interfaces, for example component interfaces in the CEM. In one example, (and referring to FIG. **7**), an operator may use a switch to deactivate the interface **706** to an encoder module. Examples of other input switches/buttons are buttons that acknowledge (temporary mute) a buzzer, alarm or a horn.

FIG. **12**B shows another example of a user interface **1204**. The user interface **1204** may be a touchscreen, tablet, PDA, monitor or other type of digital display/interface. Even though some descriptions of user interface **1204** may refer to it as a touchscreen, it should be understood that other alternatives mentioned and others may be contemplated. In some embodiments, a touchscreen may be implemented in conjunction with other types of user interfaces or user interface components, for example the components of user interface **1202**. In some embodiments, a touchscreen may be adapted to serve as the only user interface component that interfaces with the operator. In some embodiments (and referring to FIG. **6**), if a touchscreen is used to implement the user interface **614**, other components of the UIM (for example the service interface **616** and/or the status/fault indicators **618**) may be incorporated into the same touchscreen.

User interface/touchscreen **1204** may offer more flexibility and functionality than "hard" switches, lights, buzzers and the like. For example, a touchscreen may include on or more physical buttons (for example button **1218**), but may also allow an operator to engage "soft"/temporary buttons on the screen **1216** of the touchscreen. In this respect, the touchscreen may offer similar functionality to hard switches/buttons. Additionally, a touchscreen may include one or more speakers and/or audio drivers, and thus the touchscreen may offer similar functionality to hard buzzers, alarms and the like. The screen **1216** of the touchscreen **1204** may also alert an operator to an event, offering similar functionally to hard lights, lamps and the like.

A touchscreen **1204** may be adapted (i.e., programmed, etc.) to display to an operator multiple sets of screens and/or menus, with multiple sets of options, functions and the like. Additionally, a touchscreen may be adapted to display complex (for example, graphical, textual, etc.) information to an operator. For example, a touchscreen may show the operator the speed of his vehicle, or may show operator his GPS coordinates. A touchscreen **1204** may be adapted (i.e., programmed, etc.) to offer additional functionality, for example allowing operators to send messages (for example text-based or html-based message) to nearby vehicles. In some embodiments, a touchscreen may provide a GPS-augmentation feature, for example, which may adapt the touchscreen to display the location of the vehicle relative to railroad mile markers.

It should be understood that the components and/or functionalities of user interfaces **1202** and **1204** may be incorporated into or implemented in one or more physical housings and/or devices. These components may be incorporated into

discrete enclosure(s) (for example mounted near an operator/cab) and/or they may be incorporated into VMM components. In some embodiments, the user interface (for example, interfaces **1202** and/or **1204**) may be mounted alongside or in the same enclosure as the CEM **1230** or it may be mounted in a separate enclosure. For example, the user interface may be located in the passenger cab and the CEM may be located on an upper internal extremity of the vehicle. This flexible mounting arrangement may help to accommodate a wide range of equipment/vehicles that the CAS may need to track by allowing the user interface to be mounted where it is visible and accessible to the equipment operator while allowing the CEM to be mounted in close proximity to the TSM, which may improve performance, for example by allowing better reception.

The user interface (for example user interfaces **1202** and/or **1204**) may be in communication with the CEM **1230**, and/or other VMM modules. The user interface may communicate with the CEM, for example, via either a wired interface or a short range wireless connection. One benefit of a wired connection is that the CEM, may contain a power supply interface and/or a power conditioner unit and may be able to provide power to the user interfaces, along with communication functions.

Referring to FIG. **6**, the UIM **606** may include a service interface **616** that provides for installation, configuration, maintenance and/or diagnostic activities. The service interface **616** may be incorporated as part of the user interface, or it may be housed separately. In some embodiments, the service interface **616** may be located in the CEM **602**. The service interface **616** may also be used to initialize the vehicle mounted module. In other embodiments, the user interface **614** may be used to initialize the vehicle mounted module. For example, the CEM may include a setup program that initializes the various VMM components and subcomponents. An operator may use the user interface **614** or the service interface **616** to input initialization information into the setup program. Such information may include the physical location where various VMM components are mounted on the vehicle, as well as vehicle size and vehicle type. This information may be input when the vehicle mounted module is initially installed on the vehicle.

The service interface **616** may include a variety of technologies that may enable fast and easy communication between an operator and the service interface, and between the service interface and other VMM components and subcomponents. For example, service interface **616** may include one or more USB ports, Ethernet ports, and/or SD memory card slots. Service interface **616** may be configured, for example, with an industry standard Ethernet port to allow the use of commercially available laptop computers that may interface with service interface **616**, for example to perform status inquiries, to configure settings of VMM components, and/or to update the software/firmware of VMM components. Ethernet ports generally will conform to the IEEE 802.3 communication standard for 10 BASE-T Ethernet (or alternatively 100 BASE-T). In addition to Ethernet ports, or in conjunction with Ethernet ports, the service interface **616** may be configured with an 8-position RJ45 modular jack for interconnection. The service interface **616** may also operate as a DHCP server, thus allowing an operator to connect a laptop to the Ethernet port and within a few seconds be automatically configured and communicating with the VMM **600**. Alternatively, the service interface **616** may require a static IP address setting to be configured on the laptop. In such a configuration, the service interface may conform to the Internet Protocol Version 4 (IPv4). In some examples, the service interface connectors, such as the Ethernet connectors and the RJ45 connectors, may include environmental dust shields for protection.

In some embodiments, service interface **616** may include wireless capabilities. For example, service interface **616** may include a wireless radio (for example an RF radio), WIFI components and/or other wireless technology. A service interface **616** with wireless capabilities may be adapted to accept "field updates." Field updates refer to updates to the software and/or firmware of VMM modules that are "pushed" to the modules over a wireless link. In one example, a foreman may drive up to a group of vehicles and may push updates to all the vehicles simultaneously, for example without having to physically connect to the vehicles. Alternatively or in addition, wireless communications antenna **608** (and/or other wireless communication antenna(s)) may be used to perform field updates.

In one or more embodiments of the present disclosure, the VMM may include (or may interface with) one or more non-GPS type sensors. These non-GPS type sensors may be adapted to measure speed (also referred to as ground speed) and direction of a rail vehicle. A GPS unit may provide speed and direction information, but in some embodiments and/or in some situations, the non-GPS type sensors may either supplement or replace GPS speed and direction information. For example, non-GPS type sensors may supplement a GPS sensor as a form of redundancy in the system, or may provide speed and direction information when the GPS unit cannot communicate with satellites (for example, when a vehicle is inside a tunnel). Additionally, these non-GPS type sensors may allow the CAS to determine relative vehicle position. For example, the non-GPS type sensors may calculate relative vehicle position as a function of the offset from the last known GPS location.

One type of non-GPS type sensor is an encoder module. An encoder module may be adapted to measure ground speed and direction of a rail line vehicle. The encoder module may supplement the UWB technology or replace the UWB technology, for example as a method of providing more precise "dead reckoning" data to the CAS, helping to overcome the "dead reckoning" limitations of earlier systems. In one embodiment, the encoder module may include a small rubber wheel which contacts the top of a rail on which the vehicle travels. The encoder module may be mounted on an adjustable preloaded assembly which maintains contact with the rail. A magnetic rotary encoder may count the rotations of the wheel. In one example, an encoder module may use a small integrated Hall-ASIC to determine the rotational speed of the wheel. This wheel rotation information may be translated into distance information which may be communicated to a CEM either through a wired or wireless connection.

The encoder module may be adapted to allow the encoder assembly be manually or automatically raised from the tracks for maintenance or lifting of the vehicle from the tracks. The encoder module may also include auto calibration features. For example, as the encoder wheel turns, it may utilize GPS data, when it is available, to review the last distance traveled, and compare that with the number of rotations of the wheel. This information can be constantly updated and used to compensate for wheel wear and or track slippage. Referring to FIG. **7**, a CEM **700** may include one or more interfaces such that a VMM may communicate with one or more non-GPS type sensors. An encoder module, for example, may be in communication with a CEM, typically connected to a module interface. As an example, FIG. **7** depicts an encoder module **750** connecting to a CEM **700** via an interface **706**.

Another type of non-GPS type sensor that may be in communication with a VMM is microwave radar, for example a Doppler radar. A microwave radar may be adapted to measure ground speed and direction of a rail vehicle. In one example, a microwave radar may be mounted on a rail line vehicle and may be oriented to point at the ground to detect ground speed and direction of travel. A microwave radar, for example, may be in communication with a CEM, typically connected to a module interface. As an example, FIG. **7** depicts a microwave radar **752** connecting to a CEM **700** via an interface **706**.

Another type of non-GPS type sensor that may be in communication with a VMM is a laser device. A laser device may be adapted to measure ground speed and direction of a rail vehicle. In one example, laser device may be mounted on a rail line vehicle and may be oriented to point at the ground. A laser device may bounce a signal off of the ground (or other stationary object) to detect ground speed and direction of travel. A laser device, for example, may be in communication with a CEM, typically connected to a module interface. As an example, FIG. **7** depicts a laser device **754** connecting to a CEM **700** via an interface **706**.

Other types of non-GPS sensors that may be used in conjunction with the GPS sensor to detect ground speed and direction of travel include infrared sensors, UWB sensors as described herein, UWB radar sensors, and other types of radar sensors. These non-GPS type sensors may add redundancy to the GPS sensor, or they may provide information when GPS information is temporarily unavailable. One or more parts of one or more of the non-GPS type sensors may be packaged in the same enclosure as other VMM modules, or they may be packaged separately.

In operation, the CAS may be capable of precisely tracking the location and separation distances of vehicles equipped with appropriate equipment and/or components as described herein. When the CAS is tracking vehicles, a particular work gang may be operating in one of two modes for example—travel mode or work mode. For each mode, railroad companies may require that a specific spacing be maintained between vehicles. In work mode, the vehicles may be traveling at a speed of less than 10 MPH, and about 40 to 50 feet of spacing between vehicles may be required. In travel mode, the vehicles may be traveling at speeds of up to around 25 MPH, and about 300 feet to about 500 feet of spacing between vehicles may be required. Depending on the mode in which the vehicles are operating, the CAS may adjust its sensitivity and/or settings in order to better predict when collisions may be imminent.

For the CAS to operate optimally, each vehicle in a work gang may need to be equipped with a VMM. The VMMs mounted on/in the vehicles and the CTU may only be able to detect vehicles which are outfitted with a VMM. In one embodiment of the present disclosure, the CAS requires that every vehicle in a work gang be equipped with a VMM. If all vehicles in a work gang are equipped with a VMM, the CAS may be adapted to eliminate false warnings which plague existing systems, such as radar-based systems.

FIG. **13** depicts a flow diagram **1300** that shows exemplary steps in the operation of a CAS, in accordance with one or more embodiments of the present disclosure. To explain the operation of a particular vehicle/VMM, the immediate vehicle/VMM may be referred to as the "host" and nearby vehicles/VMMs with which the host links/communicates may be referred to as "targets". It should be understood that when the functionality of a host in relation to targets is explained, each target may also act as a host for the purposes of explaining how that target vehicle operates in relation to nearby vehicles.

Referring to FIG. **13**, at step **1302**, the host vehicle/VMM is powered up. This may be referred to as the initial start-up. The VMM may begin to operate whenever a vehicle's systems are powered up. At step **1304**, within a few seconds of initial startup, the host VMM may begin to automatically detect the existence of other vehicles/VMMs in the vicinity. For example, the host VMM may automatically activate one or more vehicle communication devices to search for/link with other vehicles (targets) both in front of the host vehicle and/or behind the host vehicle. The host may survey its surroundings to determine if there is any other VMM-type equipment nearby. At step **1306**, the host may determine which discovered targets, both in front and in back, are the closest and may sense/measure the actual separation distance between the closest target in front and the closest target in the back. In some embodiments, the host may sense and compute distances for vehicles beyond just the vehicles immediately to the front and back of the host. At step **1308**, the host VMM may continuously sense/calculate distances between the host vehicle and the target vehicles. In some embodiments, the host may sense and compute distances for vehicles beyond just the vehicles immediately to the front and back of the host.

At step **1310**, the host (and perhaps other target vehicles) may transmit location and speed information to the CTU, for example through the radio antenna. Additionally or alternatively, the host VMM may transmit (and/or receive) location and speed information, for example through one or more vehicle communication devices, to target vehicles/VMMs. At step **1312**, the CTU and/or CTU module inside the host VMM may calculate information, for example absolute and relative location of the vehicles in the work gang, speed and direction of vehicles, separation distances and/or safe distance violations. At step **1314**, if the CTU and/or host VMM determines that collision is imminent or prescribed safe distances are violated, the host VMM, for example via a user interface, may notify the operator. For example, if the speed and direction information violates preset separation criteria, one or more warning indicators and/or audible buzzers, alarms and the like will activate. Additionally, the host VMM may communicate the violation to the CTU, perhaps through the radio antenna. At step **1316**, if the separation violation has been resolved, for example by the movement of vehicles away from each other, the warning/notification indicator to the operator may silence, and the host may resume monitoring for other potential violations by continuously sensing nearby vehicles and computing separation distances (return to step **1308**).

FIG. **14** depicts a flow diagram **1400** that shows exemplary steps in the operation of a CAS, in accordance with one or more embodiments of the present disclosure. Specifically, flow diagram **1400** shows exemplary steps illustrating how a CAS may determine distances between vehicles. Each vehicle in a work gang may include a GPS unit as well as other sensor technologies such as UWB sensors.

At step **1402**, a host may utilize its GPS unit to determine its absolute location and speed (and perhaps direction of travel). At step **1404**, the host may determine that it would benefit from information from other non-GPS type sensors. For example, one or more vehicles in the work gang may become unable to utilize the vehicle's GPS unit. Vehicles may travel through tunnels, mountains and developed areas that include structures that may prevent or reduce the functionality of GPS-based technologies, resulting in the GPS signal being lost (the "dead reckoning" situation). In these types of situations, the host may determine that other types of sensors included in (or in communication with) the VMM may aid in determining the precise location of vehicles. Even if the GPS

signal is not lost, these other types of sensors may be used to enhance the precision of the location information gathered with respect to a vehicle. At step **1406**, the host may utilize non-GPS sensors to determine relative location and speed information. The host may utilize one or more vehicle communication devices. For example, the UWB unit may determine separation distance and closing speed. The host may utilize components connected to the VMM via component interfaces. For example, a Doppler radar or encoder wheel may determine ground speed and direction of travel.

At step **1408**, the host VMM and/or the CTU may compute separation distances between the host and other vehicles. For example, the microprocessor in the CEM (a component of the VMM) may compute the separation distance between the host and adjacent vehicles. In one illustrative example, a maintenance vehicle (the host) is 40 feet long, and a TSM is installed 10 feet behind the front of the vehicle. Another maintenance vehicle (the target) is also 40 feet long, and a TSM is installed 30 forward from the back of the vehicle. If there is 50 feet between the front of the host vehicle and the rear of the target vehicle, the CAS will measure a distance between the TSMs of 90 feet (10 feet+50 feet+30 feet). The CAS may then perform calculations to compensate for the placement of the TSMs relative to the front and rear of the vehicles. For example, the CAS will subtract 10 feet and 30 feet (the respective distances between the each TSM and the relevant ends of the vehicle) and determine a separation distance of 50 feet (90 feet−10 feet−30 feet).

At step **1410**, the host VMM and/or the CTU may compare computed separation distances to prescribed (safe) separation distances for the given vehicle speed/size. At step **1412**, the host VMM and/or the CTU may determine whether a collision is imminent and whether an operator must be cautioned. The CAS may consider a variety of types of data and scenarios to determine if a collision is imminent. For example, a separation distance of 40 feet may be acceptable when vehicles are traveling at 5 miles per hour, but if the vehicles are traveling at 20 miles per hour, an unsafe condition may exists and the operator will be notified with an audible and visual alert. In another example, a vehicle that is far ahead may not pose a hazard, but one that is directly ahead, and moving slower than the host vehicle may be a potential collision hazard. In another example, two vehicles may have been creeping along the tracks at a separation distance of 100 feet, and then the vehicles speed up to reach another worksite. If the separation distance does not increase with the increase in speed, the CAS may sound a warning or alarm.

Using various combinations of technologies (UWB, encoder modules, radar, etc.), the CAS can monitor the precise relative location and speed of the vehicles in a work gang, and determine whether a predetermined separation distance has been violated. The CAS may notify, caution, and/or alarm vehicle operators and/or other railroad personnel (via audible and/or visual indicators) when the separation distances between rail line vehicles becomes less than a specified safe distance, which may indicated that a vehicle is approaching another vehicle and is within a separation distance which may not be safe. The specified safe distance may be programmed by trained service technicians.

Instead of sounding a "hard" alarm through visual and audible alarms when a separation distance is violated, the CAS may utilize a "progressive" warning approach. In general, as the relative spacing between potential alarm events decreases, the collision avoidance system may increase the severity of the warning indication. For example, if a vehicle is on a collision course but has not yet reached a hard threshold, the collision avoidance system may initiate a "soft" alarm/notification initially, such as a short, quiet, visible-only or subdued alarm. The rate, frequency, prominence and/or severity of the alarm may then increase as the vehicles get closer to the hard alarm threshold (indicating a more critical threat condition).

The CAS may adjust its thresholds according to the speed of one or more vehicles. This feature may be referred to as an "adaptive threshold" feature. The adaptive threshold feature may allow for scaling of thresholds of the alarm/notification levels based upon the speed of the immediate vehicle and the relative speed of the immediate vehicle and a vehicle that may collide with the immediate vehicle. For example, when vehicles are traveling to a worksite, at a speed of about 25 miles per hour for example, the expected separation distance may be about 300 to about 500 feet. In a scenario where a vehicle is at a worksite, moving slowly, the expected separation distance may be smaller, for example about 40 to 50 feet. The relative vehicle speed determines how long we have to respond to the issue, and our vehicle speed determines how long the stopping distance will be, which is non-linear.

The CAS may also include an option, mode or switch whereby an operator or a railroad foreman can temporarily deactivate/silence (for example via a user interface) the separation warning/notification features of one or more vehicles. Once silenced, a warning/notification may not repeat until the vehicle separation has again exceeded prescribed safe distances, or, for example, the warning/notification may sound again after a defined period of time if the separation distance violation has not been improved. This silencing feature may allow for periodic, sanctioned violations of prescribed separation distances without alarms, buzzers and the like becoming a nuisance to the operators. An operator may simply acknowledge that the violation of the separation distance was deliberate and the notification may not repeat, until another violation occurs for example. If the violation is not acknowledged, the notification/alarm may repeat periodically.

In some situations, for example, a vehicle operator may be asked by his foreman to temporarily violate the prescribed work separation distances, such as when vehicles come together for a meeting. In this situation, vehicles will slowly approach other vehicles and stop close to other vehicles, so that the work gang may be in a tight group. The operators can then dismount and walk a short distance for a meeting. The collision avoidance system may be designed to accommodate this tight-group situation without needlessly activating alarms, annoying railroad personnel and causing nuisance false alarms, for example by detecting very slow-speed approaches. In some examples, a deactivation may require an operator or a foreman to use a key, code, password or the like to gain authorization to deactivate the warning features. This will prevent an accidental or unauthorized deactivation that may lead to an accident where no warning was sounded. In other examples, the collision avoidance system may automatically reactivate the separation warning features after a certain amount of time, or when the vehicles separate a certain distance (or satisfy a certain distance/speed ratio), so that the system remains in an active tracking and warning mode when the vehicles are working or traveling.

FIG. **15** depicts a flow diagram **1500** that shows exemplary steps in the operation of a CAS, in accordance with one or more embodiments of the present disclosure. Specifically, flow diagram **1500** shows exemplary steps in the operation of a progressive/graduated warning system. In some embodiments, the CAS may utilize a progressive/graduated warning approach that utilizes classes of warnings and/or notifications. The CAS may start by initiating one class of warning, and then escalate to a more severe class of warning if certain

distance/speed measurements violate certain thresholds. Separation distances for progressive/graduated thresholds may be based upon vehicle stopping distance test results as explained elsewhere herein. With regard to the following descriptions, it should be understood that a reference to the CAS or the VMM or the CTU performing a calculation, making a determination, generating a warning/alarm, or other events may actually be performed and/or generated by one or more components within the CAS, VMM and/or CTU.

At step **1502**, the CAS system may determine that a certain distance/speed measurements violate one or more certain preliminary thresholds. At step **1504**, the CAS generates a first class of warning. In one example, the first class of warning may be labeled as a "notification." In certain situations, it may not be dangerous to violate preliminary thresholds (for example, in the case of work vehicles congregating for a meeting), and thus notifications may be designed to allow operators to ignore/silence them. At step **1506**, the CAS may accept input from an operator regarding whether the operator wants to silence the notification. For example, an operator could indicate an "acknowledge" choice via a button, touch screen or the like. At step **1508**, if the operator chooses to silence/acknowledge the notification, this may silence the notification once, at least until a violation that leads to a notification reoccurs. Notifications may be auto ignored in certain situations, for example, if vehicles are moving very slowly. Notifications may be less prominent than other classes of warnings. For example, notifications may display on a screen on the user interface, and may initiate a short sound, without being too annoying or distracting to the operator.

At step **1510**, the CAS system may determine that a certain distance/speed measurements violate certain intermediate thresholds, thresholds that the CAS system has determined present a higher risk of collision. At step **1512**, the CAS may generate a second class of warning. In one example, the second class of warning may be labeled as a "caution" warning. In certain situations, it may not be dangerous to violate these intermediate thresholds, at least momentarily, and thus notifications may be designed to allow operators to ignore/silence them momentarily. At step **1514**, the CAS may accept input from an operator regarding whether the operator wants to silence the caution. At step **1516**, silenced caution warnings may reinitiate quickly if silenced, unless the situation that led to the caution warning is remedied. Caution warnings may be more prominent than notifications but may be less prominent than other more severe classes of warnings. For example, caution warnings may display on a screen on the user interface in a more prominent manner than notifications, such as by blinking, taking up more of the user interface screen, etc. Caution warnings may initiate a louder sound than notifications, but may be designed to avoid being too annoying or distracting to the operator.

At step **1518**, the CAS system may determine that certain distance/speed measurements violate certain critical thresholds, thresholds that the CAS system has determined present a high risk of collision and require immediate correction. At step **1520**, the CAS may generate a third class of warning. In one example, the third class of warning may be labeled as an "alarm" warning. In certain situations, it may be dangerous to violate these critical thresholds, and thus alarms may be designed to prevent operators from ignoring/silencing them. Caution warnings may be designed to get the attention of an operator very quickly, for example by being prominent, loud, frequent, bright and the like. For example, alarms may display on a screen on the user interface in a very prominent manner, such as by blinking, taking up the entire user interface screen, etc. Alarms may initiate a loud sound, and may be designed to be annoying and/or attention getting in order to force the operator to take steps to remedy the situation. Once the operator takes steps to remedy the situation, the warnings may scale back from "alarm" to "caution" to "notification" classification and/or may stop completely.

The progressive/graduated warning system described in relation to FIG. **15** may utilize an "adaptive threshold" feature, whereby one or more thresholds (for example the preliminary, intermediate and critical thresholds) may be modified depending on the speed of one or more vehicles. The adaptive threshold feature may allow for scaling of thresholds of the alarm/notification levels based upon the speed of the immediate vehicle and the relative speed of the immediate vehicle and a vehicle that may collide with the immediate vehicle.

As explained above, the maintenance vehicles often work in work gangs comprising a plurality of vehicles, for example, a group of between four and forty vehicles, and the collision avoidance system is capable of tracking each vehicle that is part of the work gang. In some embodiments of the present technology, however, a single collision avoidance system may be responsible for tracking vehicles that are part of more than one work gang. For example, the collision avoidance system may track group A and group B. A collision avoidance system may be designed to distinguish between multiple work gangs so that the collision avoidance system can determine which vehicles are on the same track. In the event that maintenance vehicles are on two closely-located parallel tracks, it may be difficult for the collision avoidance system to determine which vehicles are on the same track and thus present real collision risks. The CAS may be adapted and/or programmed to handle work group designations/associations in order to limit unwanted detections of other maintenance vehicles on adjacent tracks.

In some embodiments, the VMMs and/or the CTU may include a switch, button, touch screen or the like that may be adapted to allow an operator to select from multiple group associations. All maintenance vehicles on a single track, for example, may set their switch, button, touch screen or the like to select the same group association/setting, and vehicles on a second parallel or other close but separate track may select a different group association/setting. The collision avoidance system may be adapted to ignore (or distinguish) the vehicles on the other tracks (vehicles with an alternate group association/setting), when tracking vehicles within a target group. For example, the work group selections/associations may allow the VMMs/CTU to only notify or alarm an operator when a separation distance violation is detected with other vehicles on the same track/rail. In some embodiments, the CAS may calculate the locations of vehicles using GPS data (or data from other positioning components) and may determine vector locations of such vehicles from which a reasonable calculation of track location can be determined. Other vehicles on an alternate vector could be dismissed by the collision avoidance system when tracking vehicles within a target group.

In some embodiments of the present disclosure, the CAS may include a stopping distance calibration feature and/or may perform a stopping distance calibration method. The stopping distance calibration feature/method may determine how quickly a rail line vehicle can stop under current conditions. For example, during a maintenance project, the work gang generally performs a stopping distance test (for example, at the beginning of each work day) where a vehicle is run at a speed (for example, 25 miles per hour) and then the vehicle's brakes may be engaged and a distance may be

measured from the point where the brakes were engaged to the point where the vehicle comes to a stop. This distance may be referred to as the "stopping distance." If the weather changes and the tracks become wet (or dry), a similar stopping distance test may be performed again, and a new distance measured.

After the stopping distance is measured, the CAS may calculate various safety metrics based on the stopping distance. For example, a safe following distance between vehicles may be adjusted according to the stopping distance. In some embodiments, the collision avoidance system may maintain minimum/default metrics and then adjust the metrics if necessary based on the stopping distance. For example, a minimum/default following distance may be maintained in all situations, and the following distance may be adjusted upwards (extended) if the stopping distance is relatively high. The stopping distance may be used in conjunction with an adaptive threshold feature of a progressive/graduated warning system as described above. For example, one or more safe separation distance thresholds (for example preliminary, intermediate and critical thresholds) may be modified depending on the stopping distance. The adaptive threshold feature may allow for scaling of thresholds of the alarm/notification levels based upon the stopping distance. In one example, one or more alarm thresholds may be made more strict if the stopping distance is too high, resulting in earlier alarms, for example to allow sufficient time to stop under the current conditions.

The CAS may include an automatic/real-time stopping distance calibration feature that, when triggered, may automatically calculate the stopping distance using information from the vehicle mounted module's GPS unit and/or inertial measurement unit (for example an accelerometer or a gyroscope). The new following distance will then be automatically calculated and utilized automatically as the collision avoidance system monitors for proper vehicle separation distance.

The CAS may create and/or maintain one or more logs of events that occur during the operation of the collision avoidance system. The individual VMMs may log information regarding the vehicle on which the vehicle mounted module is mounted. The CTU may also log information regarding the several vehicles in the work gang that the CTU tracks. Saved logs may be downloadable by an authorized person, for example via a cable or a wireless connection to a laptop computer or via an interface card. The amount of log data and time periods of data may be adjustable. Each log entry may be stamped with various types of information, for example the time and duration of the event occurrence, an ID, speed and location of the vehicle and the nature of the event. The collision avoidance system may also log information from a vehicle mounted module's inertial measurement unit (for example an accelerometer or a gyroscope) and/or other shock and impact sensors mounted on a vehicle to record significant impact data related to an incident. All warnings and alarms may be logged as well. Detailed log information may allow railroad personnel to reconstruct the details of an incident. The CAS may allow for logging of vehicle positioning over time using GPS satellite data. This feature allows long term tracking of vehicle location and activities. The CAS may allow for logging of data related to one or more stopping distance calibration tests, for example routine/daily stopping distance calibration tests and/or automatic/real-time stopping distance calibration tests.

In some embodiments of the present disclosure, the collision avoidance system may include the ability to monitor worker presence around machines so that a worker or foreman may be alerted if a worker is standing in an unsafe location. For example, if a worker is standing on the tracks near a vehicle as another vehicle approaches and violates a predetermined separation criteria, the worker and the foreman may be alerted, and perhaps emergency brakes may be activated. The collision avoidance system may monitor the workers by communicating with a communication device that is located on the worker, for example attached to the worker's badge. In one example, the communication device may be an RFID device. In another example, the communication device may be a UWB device, for example a subset of a UWB ranging system that includes components, some that are located on vehicles and some components that are located on workers.

A communication device located on a worker may communicate with one or more components located in one or more vehicle mounted modules, and/or it may communicate with a central tracking unit in a discrete housing. For example, if the communication device communicates with a vehicle mounted module, the vehicle mounted module may determine the orientation and distance of the worker in relation to the vehicle.

In some embodiments of the present disclosure, the collision avoidance system may utilize the concepts described herein to monitor the "vehicle stretch" of a train that includes several cars. As a train starts, stops and changes speed, the "play" in the couplings between the cars may allow the total length of the train to change. For example, if the train starts to slow down, the cars may compact closer to each other as the couplings lock more closely, and the overall length of the train may decrease. The opposite may occur if the train begins to accelerate, for example. Vehicle stretch is an important concept because it may be a measure of efficiency in the vehicle. Stretching and compacting of the vehicles wastes energy, and if the stretch of a vehicle can be monitored, the vehicle may be designed to reduce stretch. The collision avoidance system technologies described herein, for example the UWB technology and other close proximity sensing technologies, may be used to monitor distance between train cars, and then calculations can be made in the collision avoidance system to determine vehicle stretch.

In some embodiments of the present disclosure, the collision avoidance system may monitor, nationwide, locations and speeds of vehicles, equipment and/or workers equipped with collision avoidance system technology. For example, this may allow a central railroad office to monitor several work projects that are underway at several different locations throughout the country.

In some embodiments of the present disclosure, the collision avoidance system may have the ability to interface with rail line crossing technology to control gates while the vehicles work under the surveillance of the collision avoidance system. For example, if the collision avoidance system and the crossing technology were engineered by the same company, group or firm, the interface may be seamless.

Regarding the benefits of the collision avoidance system, in addition to the benefits already described in this disclosure, the following describes further benefits of one or more embodiments of the present technology. It is to be understood that the described benefits are not limitations or requirements, and some embodiments may omit one or more of the described benefits. In some embodiments, a benefit of the collision avoidance system may be that it is implemented as a supplement to existing safety procedures and devices already established for railroad maintenance vehicles and personnel.

Alternatively, the collision avoidance system may be implemented as a primary (and perhaps the sole) collision avoidance and safety system.

Other benefits of the collision avoidance system can be realized when the collision avoidance system is compared to a single-sensor collision avoidance technology. Single sensor technologies do not work well when the work environment includes environmental and physical limitations. In addition to the complexities of tracking vehicles that travel through tunnels, mountains, building and the like, tracking vehicles can also become more complex when the vehicles travel or operate around curves or when the vehicles operate at night or during rain, snow and fog. Curves and other weather conditions create complex sensing environments that render single sensor technologies and/or strictly line-of-sight technologies inadequate. The multi-sensor approach of the collision avoidance system described above, allows for precise tracking of vehicles in these situations.

Another benefit of the collision avoidance system is that railroad companies can use the collision avoidance system to maintain an efficiently running railroad. For example, when an accident occurs in a remote area with single track, it may take days to re-open track after an accident. If the railroad companies can avoid more collisions and keep the tracks open, users of the railroad can make more efficient use of the railroad. A related benefit is that the collision avoidance system can significantly reduce the cost of running a railroad. Not only will the collision avoidance system help the railroad reduce the number of accidents, but the collision avoidance system logging functionality will give the railroads the ability to store data regarding accidents. This information may be used to alleviate rail payouts in the event of worker liability.

Although the present disclosure describes a collision avoidance system that may be applied to a work gang of railroad vehicles, the technology and the concepts described herein may be utilized in other vehicles, applications and/or industries, for example, in industries where spacing, location and status is important. Some industries that may utilize the concepts described herein are (1) the construction industry, (2) the mining industry, (3) the airport industry, specifically on airport tarmacs.

In some alternative implementations of the present disclosure, the function or functions illustrated in the blocks or symbols of a block diagram or flowchart may occur out of the order noted in the figures, and/or may include more or less steps than are shown in the figures. For example in some cases two blocks or symbols shown in succession may be executed substantially concurrently or the blocks may sometimes be executed in the reverse order depending upon the functionality involved.

One or more embodiments of the present disclosure may be realized in hardware, software, or a combination of hardware and software. The present disclosure may be realized in a centralized fashion in at least one machine, computer and/or data processing system; or in a distributed fashion where different elements are spread across several interconnected machines, computers and/or data processing systems. Any kind of machine, computer and/or data processing system or other apparatus adapted for carrying out the methods described herein is suited. A typical combination of hardware and software may be a general-purpose computer system with a computer program that, when being loaded and executed, controls the computer system such that it carries out the methods and techniques described herein.

Some embodiments of the present disclosure may provide a non-transitory machine and/or computer-readable storage and/or media, having stored thereon, a machine code and/or a computer program having at least one code section executable by a machine, computer and/or data processing system, thereby causing the machine, computer and/or data processing system to perform the steps as described herein. One example of a data processing system is a general purpose computer.

Some embodiments of the present disclosure may also be embedded in a computer program product, which comprises all the features enabling the implementation of the methods described herein, and which when loaded in a computer system is able to carry out these methods. Computer program in the present context means any expression, in any language, code or notation, of a set of instructions intended to cause a system having an information processing capability to perform a particular function either directly or after either or both of the following: a) conversion to another language, code or notation; b) reproduction in a different material form.

In the present specification, use of the singular includes the plural except where specifically indicated. In the present specification, any of the functions recited herein may be performed by one or more means for performing such functions. The present systems and methods may include various means, modules, code segments, computer programs and/or software for performing one or more of the steps or actions described in this specification. It is expressly contemplated and disclosed that the present specification provides a written description for claims comprising such means, modules, steps, code segments, computer programs and/or software.

The description of the different advantageous embodiments has been presented for purposes of illustration and description and is not intended to be exhaustive or limited to the embodiments in the form disclosed. Many modifications and variations will be apparent to those of ordinary skill in the art. Further different advantageous embodiments may provide different advantages as compared to other advantageous embodiments. The embodiment or embodiments selected are chosen and described in order to best explain the principles of the embodiments the practical application and to enable others of ordinary skill in the art to understand the disclosure for various embodiments with various modifications as are suited to the particular use contemplated.

The invention claimed is:

1. A collision avoidance system comprising:

a first vehicle mounted module mounted on a first rail vehicle, the first vehicle mounted module comprising:

a first transponder sensor module operable to send and receive data wirelessly, the first transponder sensor module comprising a first radio communication unit and a first antenna;

a first control electronics module comprising a first processor in communication with at least the first transponder sensor module; and

a first user interface module including a first user interface, the first user interface operable to provide rail vehicle information to a vehicle operator and to receive input from the vehicle operator;

a second vehicle mounted module mounted on a second rail vehicle, the second vehicle mounted module comprising:

a second transponder sensor module operable to send and receive data wirelessly, the second transponder sensor module comprising a second radio communication unit and a second antenna;

a second control electronics module comprising a second processor in communication with at least the second transponder sensor module; and

a second user interface module including a second user interface, the second user interface operable to provide rail vehicle information to the vehicle operator and to receive input from the vehicle operator;

wherein:

the first vehicle mounted module is operable to communicate with the second vehicle mounted module mounted on the second rail vehicle; and

the first vehicle mounted module and the second vehicle mounted module are operable to apply a time of flight technique to determine a separation distance between the first rail vehicle and the second rail vehicle.

2. The collision avoidance system of claim **1**, further comprising:

a central tracking unit in communication with the first vehicle mounted module and the second vehicle mounted module, wherein the central tracking unit is operable to track a location of the first vehicle mounted module and a location of the second vehicle mounted module.

3. The collision avoidance system of claim **2**, wherein:

the central tracking unit is distributed among at least the first rail vehicle and the second rail vehicle; and

the first vehicle mounted module comprises a first central tracking unit component.

4. The collision avoidance system of claim **2**, wherein the central tracking unit is located in a discreet housing.

5. The collision avoidance system of claim **1**, wherein the first vehicle mounted module further comprises a first auxiliary transponder sensor module, the first auxiliary transponder sensor module mounted on the first rail vehicle with a first offset with respect to the first transponder sensor module.

6. The collision avoidance system of claim **5**, wherein:

the first auxiliary transponder sensor module comprises a first auxiliary antenna, the first auxiliary antenna being connected to at least one of the first radio communication unit or a first auxiliary radio communication unit; and

the first auxiliary antenna is mounted on the first rail vehicle with a first offset with respect to the first antenna.

7. The collision avoidance system of claim **1**, wherein:

the first vehicle mounted module further comprises a first global positioning system unit, the global positioning system unit operable to receive information from one or more satellites to determine an absolute position of the first rail vehicle; and

the first global positioning system unit is in communication with the first control electronics module.

8. The collision avoidance system of claim **7**, wherein:

the first vehicle mounted module receives information generated by the first global positioning system unit and the first radio communication unit to determine whether one or more vehicle separation criteria are violated; and

the first vehicle mounted module generates a warning signal when one or more vehicle separation criteria are violated.

9. The collision avoidance system of claim **1**, wherein:

the first vehicle mounted module is adapted to execute a progressive warning signal if one or more vehicle separation criteria are violated; and

the progressive warning signal increases in at least one of signal rate, signal frequency, single prominence, signal volume, or signal severity as the violation of the vehicle separation criteria approaches or extends beyond a vehicle separation threshold.

10. The collision avoidance system of claim **1**, wherein the first vehicle mounted module executes an adaptive threshold feature that modifies one or more vehicle separation thresholds based on a speed of the first rail vehicle and a speed of the second rail vehicle.

11. The collision avoidance system of claim **1**, further comprising:

at least a first ground speed detection module operable to determine the speed of the rail vehicle, wherein the first vehicle mounted module communicates with at least the first ground speed detection module.

12. The collision avoidance system of claim **1**, further comprising:

a first inertial measurement unit in communication with at least the first control electronics module, the first inertial measurement unit being operable to detect changes in a speed of the first rail vehicle.

13. The collision avoidance system of claim **12**, wherein the first inertial measurement unit comprises at least one of an accelerometer or a gyroscope.

14. The collision avoidance system of claim **1**, wherein the first radio communication unit is operable to transmit and receive signals with varying center frequencies.

15. The collision avoidance system of claim **1**, wherein;

the first vehicle mounted module is adapted to execute a stopping distance calibration feature to determine a measured stopping distance under existing conditions; and

the measured stopping distance is the distance between a first location of the first rail vehicle when brakes are engaged and a second location where the first rail vehicle comes to a stop under the existing conditions.

16. The collision avoidance system of claim **15**, wherein:

the first vehicle mounted module executes a progressive warning signal if one or more vehicle separation criteria are violated;

the progressive warning signal increases in at least one of signal rate, signal frequency, single prominence, signal volume, or signal severity as the violation of the vehicle separation criteria approaches or extends beyond a vehicle separation threshold; and

the first vehicle mounted module executes an adaptive threshold feature that modifies one or more vehicle separation thresholds based on the measured stopping distance.

17. A rail vehicle module mountable on a first rail vehicle, the module comprising:

a transponder sensor module comprising:

a radio communication unit operable to employ time of flight techniques to detect a separation distance between the first rail vehicle and a second vehicle;

a first wireless communications antenna operable to send and receive data representing the separation distance over the air;

a global positioning system unit operable to receive information from one or more satellites to determine an absolute position of the first rail vehicle;

a control electronics module comprising a processor in communication with the transponder sensor module; and

a user interface module including a user interface operable to provide rail vehicle information to a vehicle operator and to receive input from the vehicle operator,

wherein the rail vehicle module communicates with a second rail vehicle module mountable on the second vehicle to detect a separation distance between the first rail vehicle and the second vehicle.

18. The rail vehicle module mountable on a first rail vehicle of claim **17**, further comprising:

a second wireless communications antenna mounted on the first rail vehicle, wherein:

the second wireless communications antenna is mounted on the first rail vehicle at an offset from the wireless communications antenna; and

the rail vehicle module is operable to receive calibration information related to a length of the rail vehicle, a mounting location of the first wireless communications antenna, and a mounting location of the second wireless communications antenna.

19. The rail vehicle module mountable on a first rail vehicle of claim **17**, wherein:

the rail vehicle module is operable to utilize information generated by the radio communications unit and the global positioning system unit to determine whether one or more vehicle separation criteria are violated, and

the rail vehicle module is further operable to generate a progressive warning signal if one or more vehicle separation criteria are violated; and

the progressive warning signal increases in at least one of signal rate, signal frequency, signal prominence, signal volume, or signal severity as the violation of the vehicle separation criteria approaches or extends beyond a vehicle separation threshold.

20. The rail vehicle module mountable on a first rail vehicle of claim **18**, further comprising a first central tracking unit component, wherein the first central tracking unit component is in communication with a second central tracking unit component mounted on the second vehicle.

* * * * *

EXHIBIT D

US010737709B2

(12) **United States Patent**
Carlson et al.

(10) **Patent No.: US 10,737,709 B2**
(45) **Date of Patent: Aug. 11, 2020**

(54) **WORKER PROTECTION SYSTEM**

(71) Applicant: **Metrom Rail, LLC**, Crystal Lake, IL (US)

(72) Inventors: **Richard Carlson**, Woodstock, IL (US); **Kurt Gunther**, Leland, IL (US); **Sara Jo Woitel**, Lake Zurich, IL (US); **Marc Wayne Cygnus**, Mundelein, IL (US); **Peter Strezev**, Apollo Beach, FL (US); **John Albert Plutt, Jr.**, Chicago, IL (US)

(73) Assignee: **Metrom Rail, LLC**, Crystal Lake, IL (US)

(*) Notice: Subject to any disclaimer, the term of this patent is extended or adjusted under 35 U.S.C. 154(b) by 0 days.

(21) Appl. No.: **16/246,940**

(22) Filed: **Jan. 14, 2019**

(65) **Prior Publication Data**

US 2019/0283787 A1 Sep. 19, 2019

Related U.S. Application Data

(63) Continuation of application No. 15/078,427, filed on Mar. 23, 2016, now Pat. No. 10,179,595.

(Continued)

(51) **Int. Cl.**

B61L 23/06 (2006.01)
B61L 25/02 (2006.01)

(Continued)

(52) **U.S. Cl.**

CPC ***B61L 23/06*** (2013.01); ***B61L 15/0027*** (2013.01); ***B61L 25/021*** (2013.01); ***B61L 25/025*** (2013.01);

(Continued)

(58) **Field of Classification Search**

CPC B61L 23/06; B61L 23/34; B61L 25/02; G08B 1/08; G08B 13/2488; G08B 21/02;

(Continued)

(56) **References Cited**

U.S. PATENT DOCUMENTS

2,475,578 A * 7/1949 Halstead B61L 23/00 362/88
2,762,913 A * 9/1956 Jepson B61L 23/34 246/124

(Continued)

FOREIGN PATENT DOCUMENTS

CN	1417071	5/2003
CN	1676375	10/2005
CN	102923158	2/2013

OTHER PUBLICATIONS

International Search Report and Written Opinion for PCT/US2016/023754, dated Aug. 8, 2016. (10 pages).

(Continued)

Primary Examiner — Jason C Smith
(74) *Attorney, Agent, or Firm* — McAndrews, Held & Malloy, Ltd.

(57) **ABSTRACT**

A worker protection system may include a train-mounted unit for use on a train, and one or more wayside units, configured for placement on or near a track traversed by the train. Each of the train-mounted unit and the one or more wayside units may include a corresponding communication component, with one or more antennas, configured to transmit and/or receive wireless signals, with the signals comprise ultra-wideband (UWB) signals, and one or more circuits configured for processing signals and data, and for performing applications or functions relating to operations of the corresponding unit. The train-mounted unit may operate cooperatively with the one or more wayside units, to provide alerts to one or more workers operating on or near

(Continued)

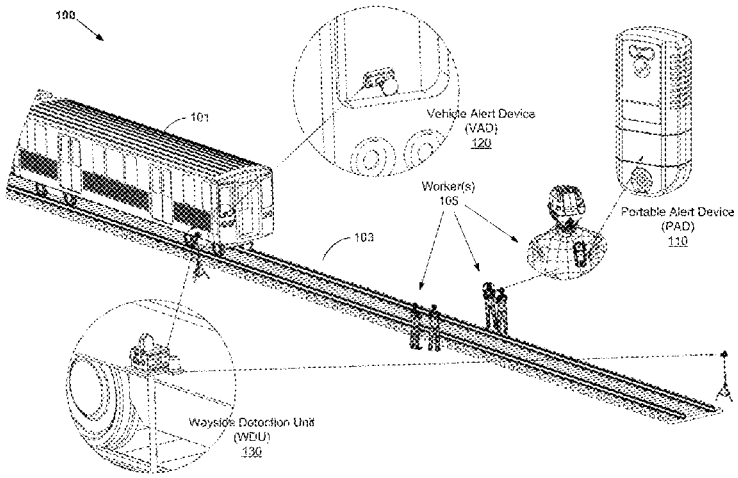

the track, based on communication of the UWB signals with at least one of the one or more wayside units.

20 Claims, 6 Drawing Sheets

Related U.S. Application Data

(60) Provisional application No. 62/177,683, filed on Mar. 23, 2015.

(51) **Int. Cl.**
G01S 19/17 (2010.01)
B61L 15/00 (2006.01)

(52) **U.S. Cl.**
CPC ***G01S 19/17*** (2013.01); *B61L 2205/02* (2013.01); *B61L 2205/04* (2013.01)

(58) **Field of Classification Search**
CPC . G08B 21/18; G08F 1/123; G08F 1/16; G08F 1/163; G08F 1/166
See application file for complete search history.

(56) **References Cited**

U.S. PATENT DOCUMENTS

4,302,811 A 11/1981 McElhenny
4,327,415 A 4/1982 Rush et al.
4,459,668 A 7/1984 Inoue et al.
4,495,578 A 1/1985 Sibley et al.
4,538,228 A 8/1985 Brearey et al.
4,869,557 A 9/1989 Gerum et al.
5,198,800 A * 3/1993 Tozawa E02F 9/2033 212/276
5,554,982 A * 9/1996 Shirkey ..... B61L 3/004 246/122 R
5,620,155 A * 4/1997 Michalek B61L 29/24 246/121
5,652,570 A * 7/1997 Lepkofker A61B 5/1112 340/407.1
5,675,190 A 10/1997 Morita
5,727,758 A * 3/1998 Penza B61L 23/06 246/124
5,924,651 A * 7/1999 Penza B61L 23/06 246/124
5,939,986 A * 8/1999 Schiffbauer B66C 15/045 299/12
6,113,037 A * 9/2000 Pace B61L 23/06 246/124
6,145,792 A * 11/2000 Penza ..... B61L 3/125 246/122 R
6,208,260 B1 * 3/2001 West B66C 15/06 340/5.1
6,232,887 B1 * 5/2001 Carson B61L 23/06 340/4.21
6,650,242 B2 * 11/2003 Clerk F16P 3/144 340/425.5
7,167,082 B2 * 1/2007 Stigall A41D 13/00 340/407.1
7,624,952 B1 * 12/2009 Bartek B61L 23/06 246/124
8,109,474 B2 * 2/2012 Bartek B61L 1/02 246/124
8,200,380 B2 6/2012 Ghaly
8,248,263 B2 * 8/2012 Shervey F16P 3/147 340/539.1
8,344,877 B2 1/2013 Sheardown et al.
8,478,463 B2 7/2013 Knott et al.
8,651,433 B2 2/2014 Ghaly
8,786,428 B2 * 7/2014 Sheardown ..... B61L 23/06 246/122 R
8,952,805 B2 * 2/2015 Baines G08B 21/02 340/539.12
9,134,411 B2 9/2015 Soderi et al.
2003/0214417 A1 11/2003 Peltz et al.
2004/0155760 A1 8/2004 Grisham
2005/0010338 A1 1/2005 Kraeling et al.
2005/0110628 A1 5/2005 Kemwein et al.
2006/0015224 A1 1/2006 Hilleary
2006/0151672 A1 7/2006 Heddebaut
2008/0040023 A1 2/2008 Breed et al.
2008/0114519 A1 5/2008 Defaux
2010/0063656 A1 3/2010 Knott et al.
2010/0102954 A1 * 4/2010 Radivojevic G01S 11/06 340/539.11
2010/0225527 A1 9/2010 Talty
2010/0268466 A1 10/2010 Amutham
2011/0006912 A1 * 1/2011 Sheardown B61L 23/06 340/901
2011/0046845 A1 2/2011 Kozlay
2011/0152971 A1 * 6/2011 Nghiem A61N 1/37229 607/60
2011/0184621 A1 7/2011 Bock et al.
2011/0234451 A1 9/2011 Bock et al.
2012/0029740 A1 2/2012 Bock et al.
2012/0286563 A1 11/2012 Lichterfield et al.
2012/0296562 A1 * 11/2012 Carlson B61L 15/0027 701/301
2013/0138276 A1 5/2013 Soderi et al.
2013/0166114 A1 * 6/2013 Baines B61L 23/06 701/20
2014/0045547 A1 * 2/2014 Singamsetty G06F 1/1643 455/552.1
2014/0046514 A1 2/2014 Jennek et al.
2014/0214247 A1 7/2014 Myokei
2014/0229096 A1 8/2014 Carlson
2015/0032302 A1 1/2015 Foerster et al.
2015/0060608 A1 3/2015 Carlson et al.
2015/0329130 A1 11/2015 Carlson et al.
2015/0367822 A1 12/2015 Jennek et al.
2016/0280240 A1 * 9/2016 Carlson G01S 19/17
2017/0282944 A1 * 10/2017 Carlson B61L 15/0027

OTHER PUBLICATIONS

Chinese Office Action for Application No. 201710074449.6, dated Jan. 17, 2019 (22 pages).
PCT, Notification of Transmittal of the International Search Report and the Written Opinion of the International Searching Authority, or the Declaration, in International application No. PCT/US2014/053900, dated Feb. 18, 2015 (21 pages).

* cited by examiner

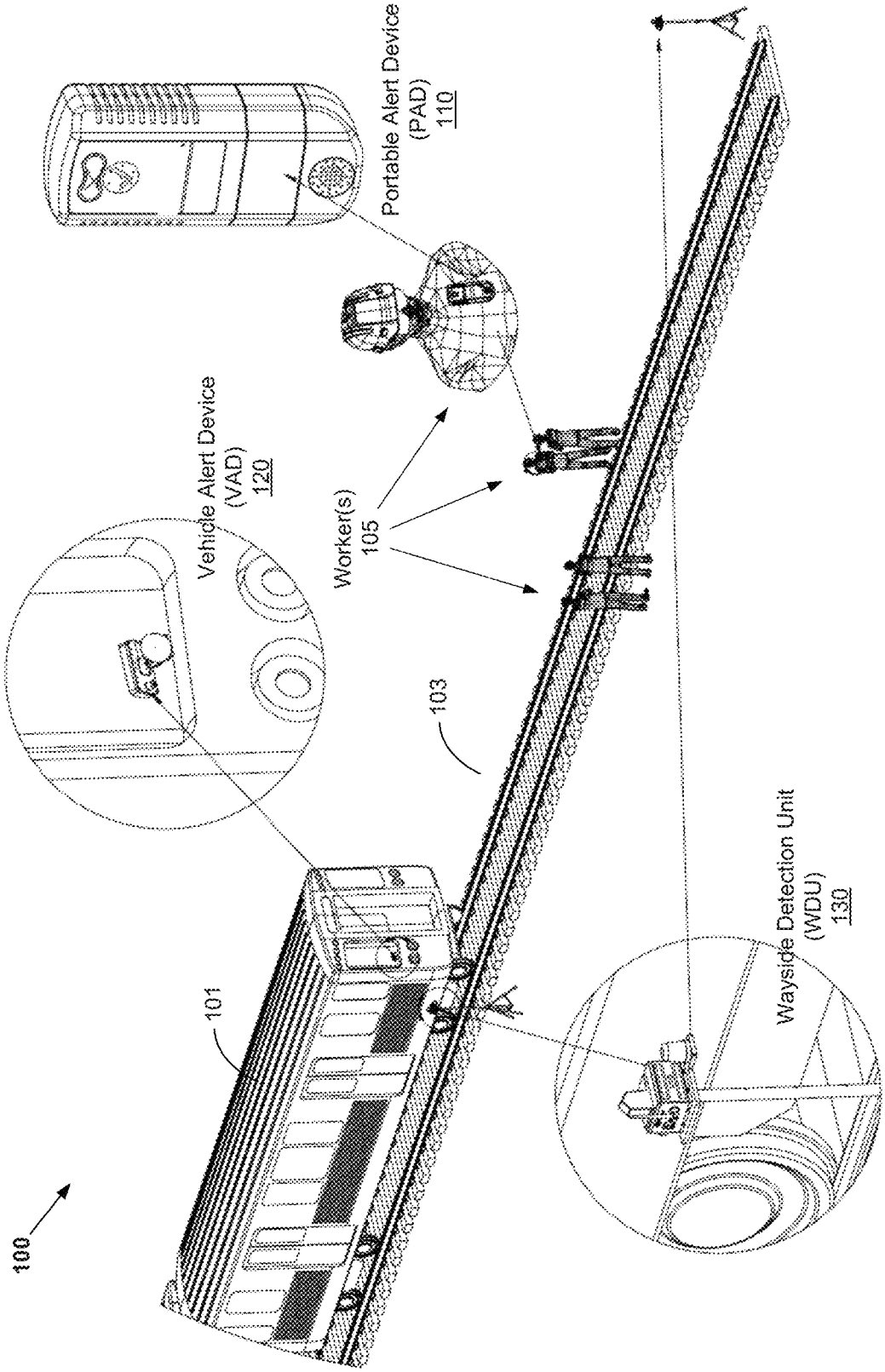
Portable Alert Device
(PAD)
110
Vehicle Alert Device
(VAD)
120
Worker(s)
105
103
101
100
Wayside Detection Unit
(WDU)
130

FIG. 1A

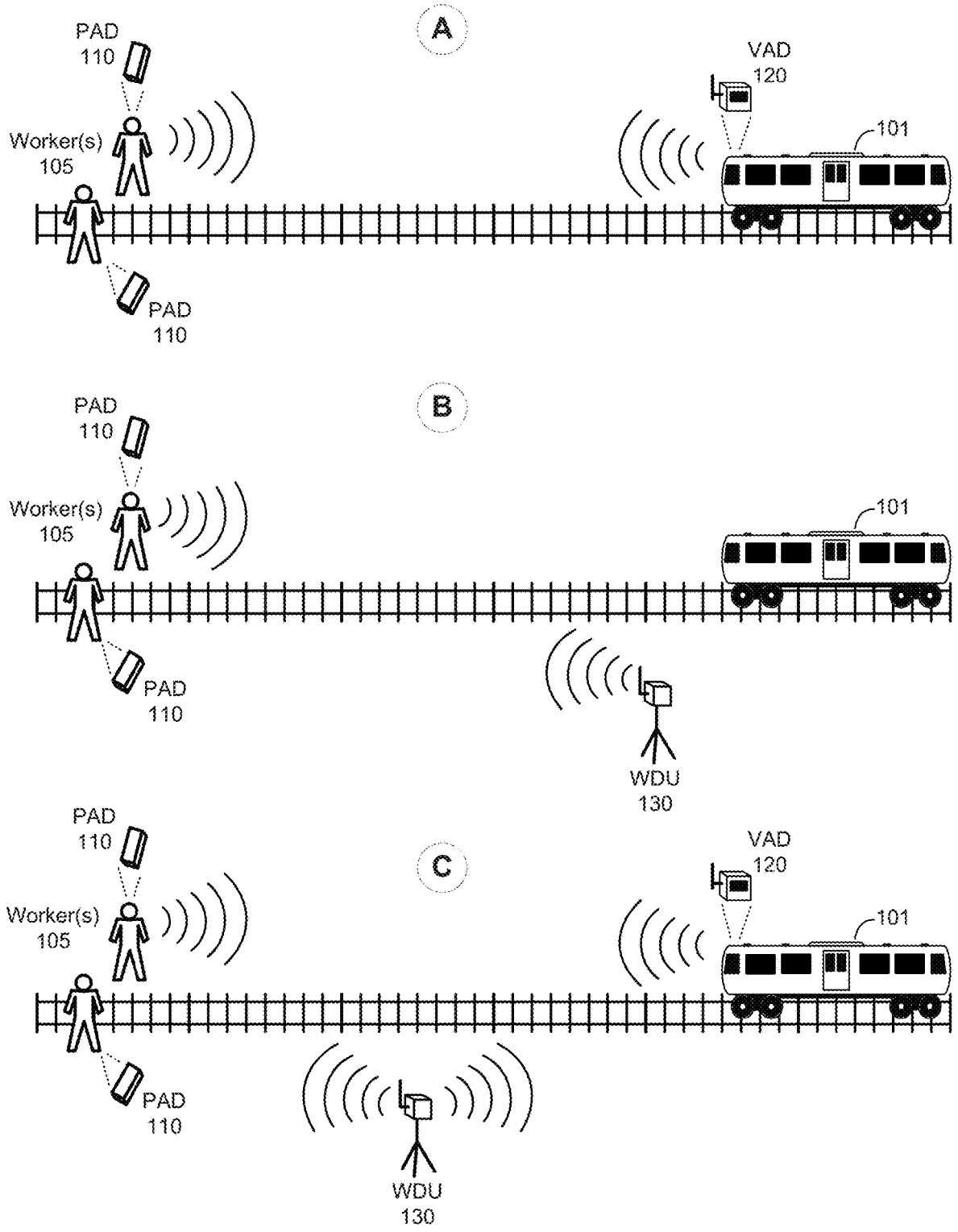
A
PAD
110
Worker(s)
105
PAD
110
VAD
120
101
B
PAD
110
Worker(s)
105
PAD
110
101
WDU
130
C
PAD
110
Worker(s)
105
PAD
110
VAD
120
101
WDU
130

FIG. 1B

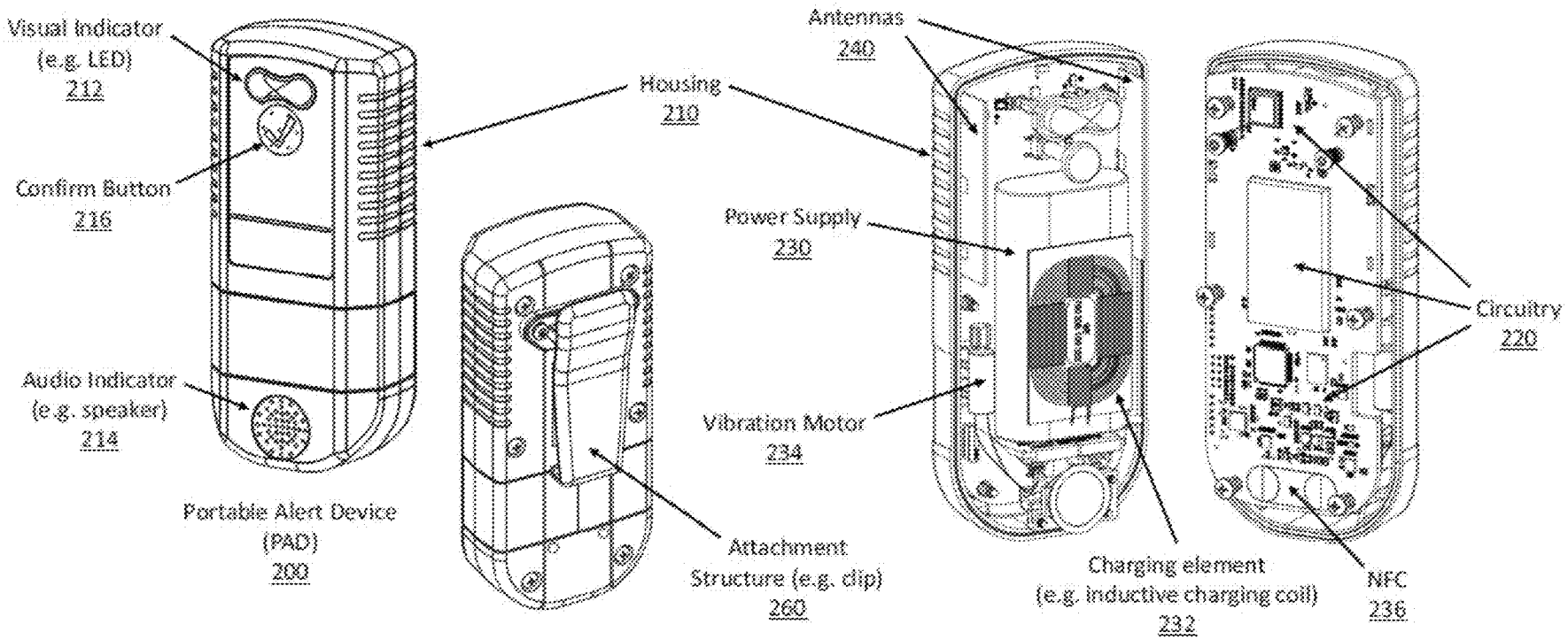
Visual Indicator
(e.g. LED)
212
Confirm Button
216
Audio Indicator
(e.g. speaker)
214
Portable Alert Device
(PAD)
200
Housing
210
Antennas
240
Power Supply
230
Vibration Motor
234
Attachment
Structure (e.g. clip)
260
Charging element
(e.g. inductive charging coil)
232
Circuitry
220
NFC
236

FIG. 2A

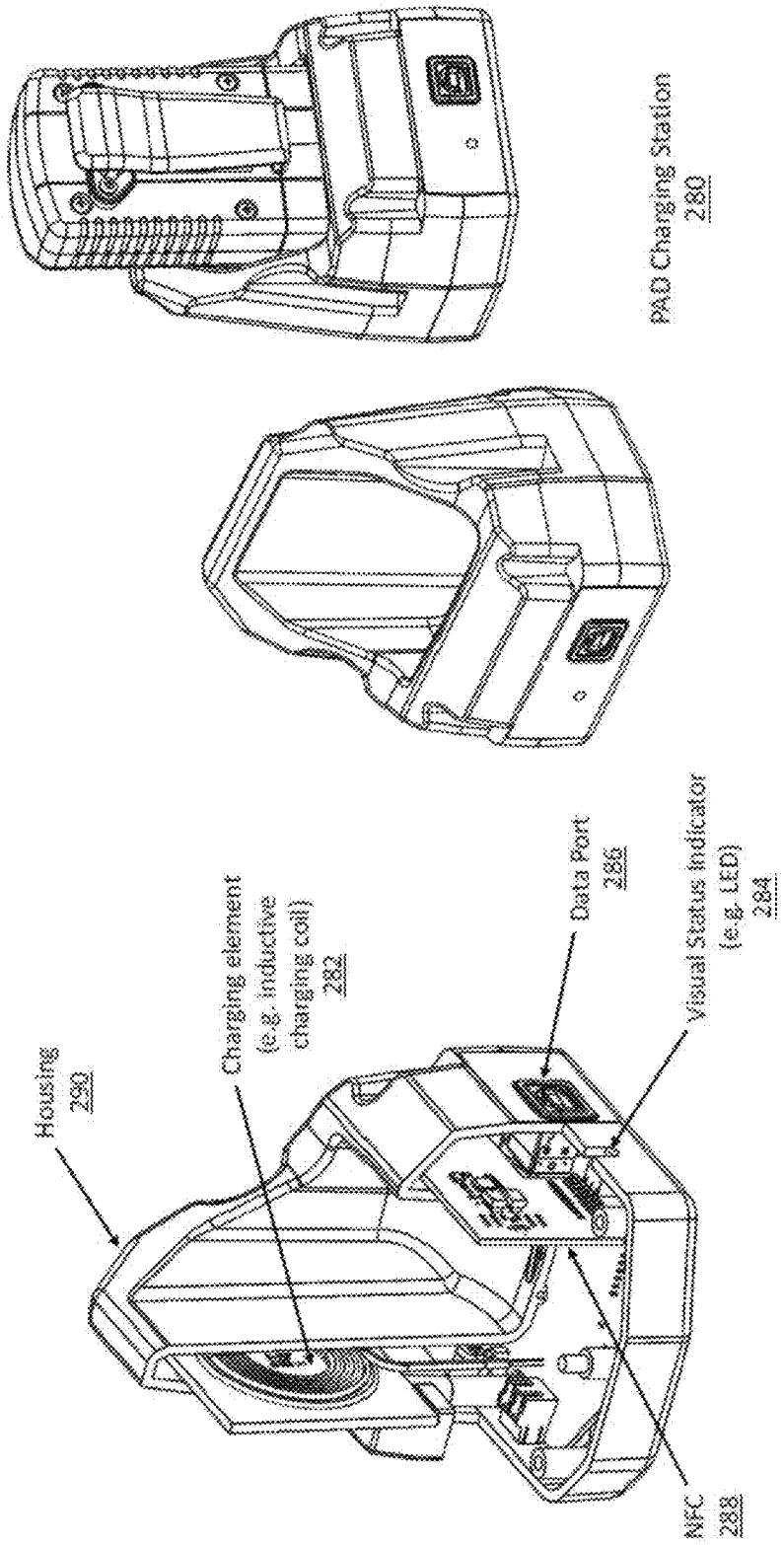
PAD Charging Station
280
Housing
290
Charging element
(e.g. inductive
charging coil)
282
Data Port
286
Visual Status Indicator
(e.g. LED)
284
NFC
288

FIG. 2B

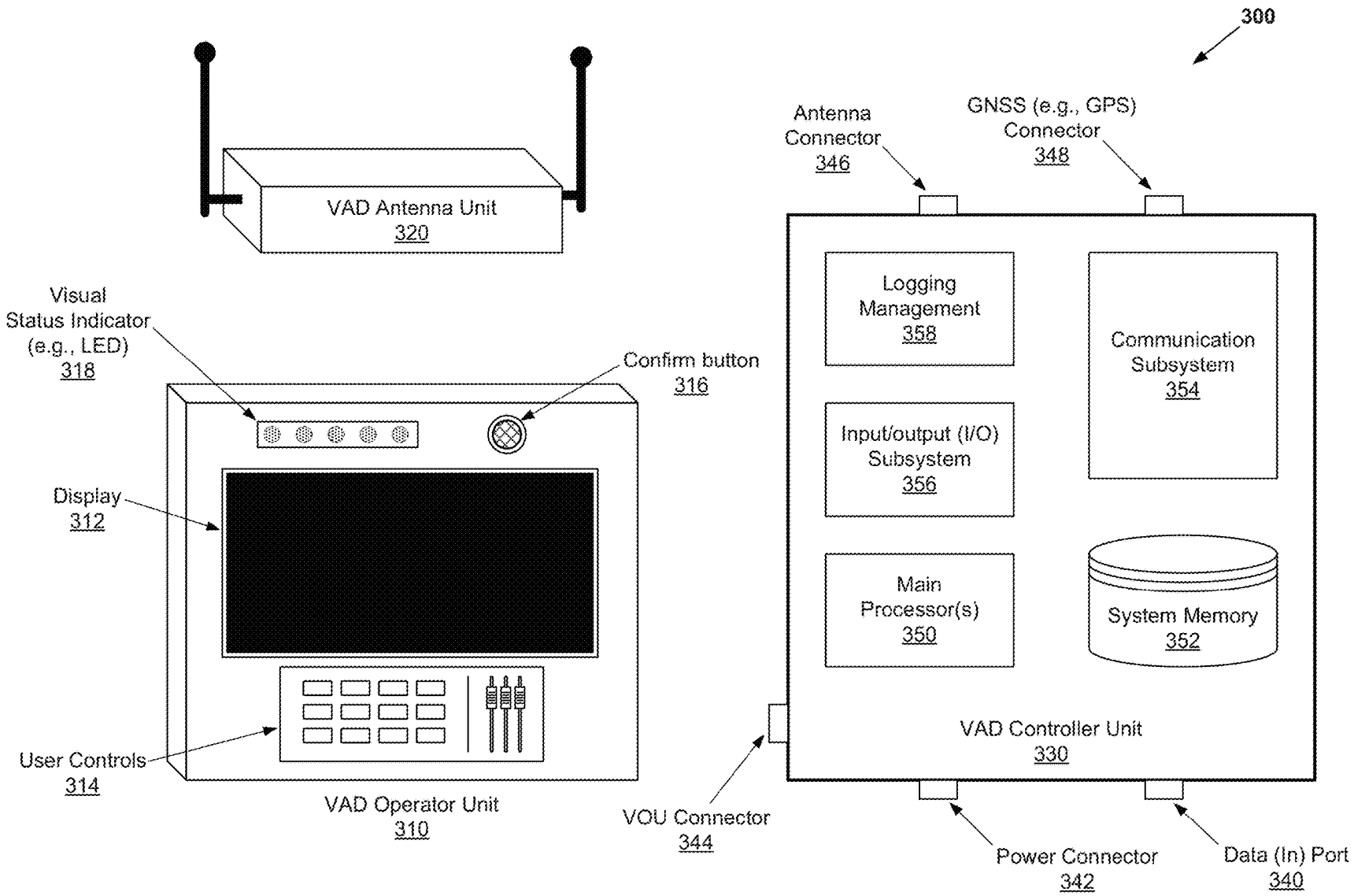
300
VAD Antenna Unit
320
Visual
Status Indicator
(e.g., LED)
318
Confirm button
316
Display
312
User Controls
314
VAD Operator Unit
310
VOU Connector
344
Antenna
Connector
346
GNSS (e.g., GPS)
Connector
348
Logging
Management
358
Communication
Subsystem
354
Input/output (I/O)
Subsystem
356
Main
Processor(s)
350
System Memory
352
VAD Controller Unit
330
Power Connector
342
Data (In) Port
340

FIG. 3

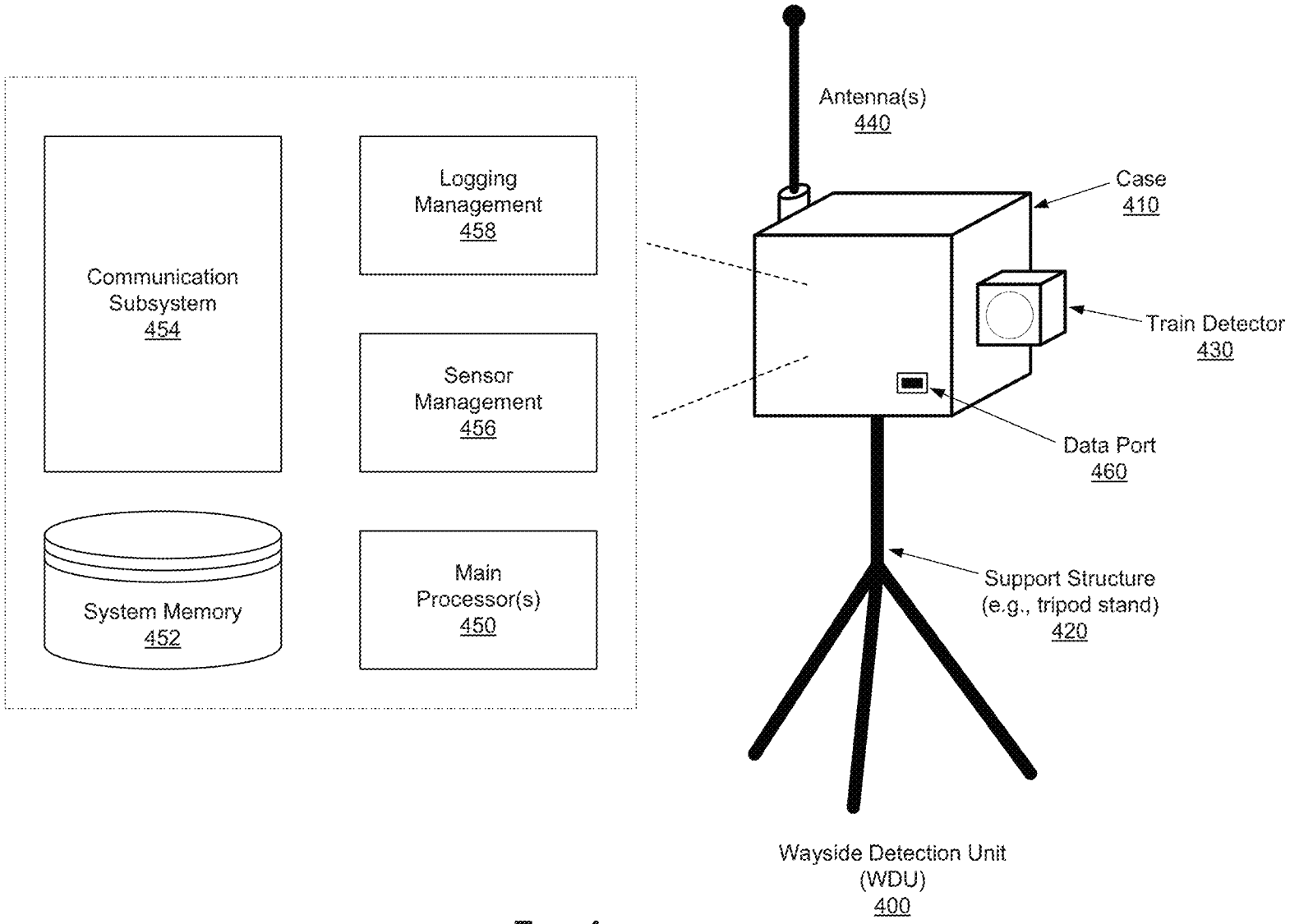
Communication Subsystem 454
Logging Management 458
Sensor Management 456
System Memory 452
Main Processor(s) 450
Antenna(s) 440
Case 410
Train Detector 430
Data Port 460
Support Structure (e.g., tripod stand) 420
Wayside Detection Unit (WDU) 400

FIG. 4

WORKER PROTECTION SYSTEM

CLAIM OF PRIORITY

This patent application is a continuation of U.S. Provisional patent application Ser. No. 15/078,427, filed on Mar. 23, 2016, which makes reference to, claims priority to and claims benefit from U.S. Provisional Patent Application Ser. No. 62/177,683, filed on Mar. 23, 2015. The above identified application is hereby incorporated herein by reference in its entirety.

TECHNICAL FIELD

Aspects of the present disclosure relate to safety solutions particularly in conjunction with railway systems. More specifically, various implementations of the present disclosure relate to methods and systems for worker protection.

BACKGROUND

Various issues may exist with conventional approaches for worker protection in conjunction with railway systems. In this regard, conventional systems and methods, if any existed, for worker protection in conjunction dangers posed by work on or near tracks, can be costly, inefficient, and/or ineffective. Further limitations and disadvantages of conventional and traditional approaches will become apparent to one of skill in the art, through comparison of such systems with some aspects of the present disclosure as set forth in the remainder of the present application with reference to the drawings.

BRIEF SUMMARY

System and methods are provided for enhanced worker protection, substantially as shown in and/or described in connection with at least one of the figures, as set forth more completely in the claims.

These and other advantages, aspects and novel features of the present disclosure, as well as details of an illustrated embodiment thereof, will be more fully understood from the following description and drawings.

BRIEF DESCRIPTION OF THE DRAWINGS

FIG. **1**A illustrates an example work protection system, in accordance with the present disclosure.

FIG. **1**B illustrates example use scenarios of a work protection system, in accordance with the present disclosure.

FIG. **2**A illustrates an example portable alert device (PAD), in accordance with the present disclosure.

FIG. **2**B illustrates an example charging station for use in conjunction with portable alert devices (PADs), in accordance with the present disclosure.

FIG. **3** illustrates an example vehicle alert device (VAD), in accordance with the present disclosure.

FIG. **4** illustrates an example wayside detection unit (WDU), in accordance with the present disclosure.

DETAILED DESCRIPTION OF THE INVENTION

As utilized herein the terms "circuits" and "circuitry" refer to physical electronic components (e.g., hardware) and any software and/or firmware ("code") which may configure the hardware, be executed by the hardware, and or otherwise

be associated with the hardware. As used herein, for example, a particular processor and memory may comprise a first "circuit" when executing a first one or more lines of code and may comprise a second "circuit" when executing a second one or more lines of code. As utilized herein, "and/or" means any one or more of the items in the list joined by "and/or". As an example, "x and/or y" means any element of the three-element set {(x), (y), (x, y)}. In other words, "x and/or y" means "one or both of x and y." As another example, "x, y, and/or z" means any element of the seven-element set {(x), (y), (z), (x, y), (x, z), (y, z), (x, y, z)}. In other words, "x, y and/or z" means "one or more of x, y, and z." As utilized herein, the term "exemplary" means serving as a non-limiting example, instance, or illustration. As utilized herein, the terms "for example" and "e.g." set off lists of one or more non-limiting examples, instances, or illustrations. As utilized herein, circuitry is "operable" to perform a function whenever the circuitry comprises the necessary hardware and code (if any is necessary) to perform the function, regardless of whether performance of the function is disabled or not enabled (e.g., by a user-configurable setting, factory trim, etc.).

FIG. **1**A illustrates an example work protection system, in accordance with the present disclosure. Shown in FIG. **1**A is a worker protection system **100**, which may be used in providing and/or enhancing workers safety, particularly with regard to dangers posed by trains in railway work environments.

The worker protection system **100** is a proximity warning system operable to issue alerts (e.g., to railroad worker(s) **105**) when a particular vehicle (e.g., a train **101**) is approaching. In this regard, the worker protection system **100** comprises one or more devices or components, each comprising suitable hardware (including, e.g., circuitry), software, or any combination thereof configured for supporting worker protection related operations or functions.

For example, the worker protection system **100**, as shown in FIG. **1**A, comprises one or more wearable devices, referred to as portable alert devices (PADs) **110**, which are worn by worker(s) **105**. The PADs **110** communicate with one or more companion devices, which are configured to directly trigger (and transmit to the PADs **110**) alerts, or transmit signals causing issuing of alerts by the PADs **110**. The companion devices comprise vehicle-mounted companion devices, referred to as vehicle alert devices (VADs) **120**, mounted on vehicles (e.g., the train **101**) that may pose danger to the workers, and/or stand-alone devices that are placed in "wayside" manner—that along or near path of the approaching object (e.g., track **103** traversed by the train **101**), referred to wayside detection units (WDUs) **130**, which are portable devices placed by the workers **105** at the work site. The VAD **120** is configured to trigger alerts under particular conditions—e.g., when it detects it is approaching a crew equipped with the corresponding wearable devices (PADs **110**). The VAD **120** may also be configured to alert the vehicle operator—that workers are in proximity, and may provide additional information in this regard (e.g., display the number of detected workers, indicate distance to workers, indicate whether workers have confirmed the alarm, etc.). Similarly, the WDU **130** is configured to trigger alerts under particular conditions, such as when it detects the approaching vehicle (the train **101**). In this regard, the WDU **130** may be used when no VADs **120** are being used, or even when VADs **120** are utilized, such as to provide redundant warning capabilities with additional range.

The PAD **110** may be designed and configured as small and light device, with low profile so as not to impede normal

working activities of the worker(s) **105** wearing it. For example, the PAD **110** may be worn by either a clip, arm band or belt clip. The PAD **110** is operable to issue an indication (e.g., audio, visual, tactile, etc.) to alert the worker wearing it of an approaching object (that pose a safety concern). For example, the PAD **110** may comprise audio warning component (e.g., a speaker), a visual warning component (e.g., a multi-color LED indicator), tactile indicator component (e.g., vibration), etc. Further, the PAD **110** may be operable to enable the user to provide feedback in response to issued alarm indication. For example, the PAD **110** may comprise an alert acknowledgement element, such as a confirmation button to silence alarms (i.e., a "mute" or "confirm" switch). To improve and optimize wearability of the PAD **110**, its housing may be designed to include various features to support multiple mounting locations and/or approaches (e.g., clipped on the user's clothing/equipment, around the user's wrist, etc.). The PAD **110** may be configurable to provide alerts adaptively based on particular pre-set conditions—e.g., to provide at least a 15 second warning in line of sight conditions, when a train is approaching at 60 mph.

The VAD **120** may be configured either as a portable device (e.g., brought into and that may be mounted to vehicles only when needed), or as permanently mounted or integrated component (of vehicles). Implementing the VAD **120**, which typically is the most costly component of the system, as a detachable device may be desirable as it allows use of small number of the VADs **120**, being only moved into and used on vehicles being operated, thus reducing the deployment cost significantly. The VAD **120** may be operable to broadcast signals that are specifically configured to interfaces with the wearable devices (PADs **110**) and may also interface with the wayside unit (WDU **130**) to provide increased distance. Further, in some instances the VAD **120** may be operable to, when worker(s) is/are detected, provide indication to the operator(s) of the vehicle, such as by displaying and/or sounding warnings. In some instances, the VAD **120** may provide detailed information (rather than generic warning), such as indicating the quantity of workers detected, and the approximate distance to the workers.

While the VAD **120** is illustrated in FIGS. **1**A and **1**B as a singular physical component, incorporating all components (including antennas), the disclosure is not so limited, and in some instances VADS may be implemented to support distributed arrangements—e.g., comprising a plurality of physical units, which may be placed at different locations or positions within the vehicles. For example, VADs may comprise a first physical unit comprising the antennas (and related circuitry or other support components), and one or more other physical units housing the remaining components of the VADs. In this regard, the physical antenna unit may be configured for optimal placement (e.g., on roof of front car in train) which may be deemed optimal based on one or more placement criteria (e.g., optimal broadcast characteristics, maximum safety to operators and other individuals on train, such as passengers, etc.).

The WDU **130** is configured to operate as stand-alone device, placed on or near the path of the object(s) being detected. For example, the WDU **130** may be attached to placement component (e.g., a tripod), and is temporarily placed near the track **103**. The placement of the WDU **130** may be subject to particular criteria—e.g., no closer than certain distance (for example, four feet) to the nearest rail, at or in advance of each end of a work zone. The WDU **130** broadcasts a signal when a train or vehicle passes. The WDU **130** may have dual functionality as it may interface with the VAD while also broadcasting signals to PADs. The WDU **130** may be utilized in areas where trains or other vehicles may not have vehicle mounted companion devices (e.g., VADs **120**). Nonetheless, the disclosure is not so limited, and in some instances all three types of devices may work together, as described below.

In certain implementations, worker protection systems in accordance with the present disclosure, such as the worker protection system **100**, may incorporate various solutions for providing worker alerts (particularly, e.g., for railway work environments) in enhanced and adaptive manner. For example, worker protection system **100** may be configured to trigger alerts based on speed, at least in part, rather than simply based on distance between workers and approaching trains. In this regard, the worker protection system **100** may be configured to utilize the approach speed to appropriately time to the alert so that the alerts are not triggered too late, but also are not triggered too early causing the workers **105** to start ignoring and suppressing alerts (e.g., on very slow moving or stationary vehicles), until the vehicle is actually a potential threat. Thus, the distance at which the alerts are triggered may be based on the speed of the vehicles. For example, for trains approaching at speeds under 4 mph, no alerts are triggered until the train is within 100 feet, whereas for a train approaching at 30 mph the alerts are triggered when the train is with 1000 feet. In this regard, the conditions at which the alerts are triggered (e.g., speed, distances, or combinations thereof) may be configurable.

Various aspects of the alert related operations (triggering criteria) and/or associated functions (e.g., logging) may be location-dependent. As such, worker protection systems in accordance with the present disclose (e.g., the worker protection system **100**) may support use of positioning solutions (e.g., Global Navigation Satellite System (GNSS) technologies, such as GPS, GLONASS, Galileo, etc.), to enable obtaining location/positioning information that may be used in alert related operations or functions. This may be done by incorporating into the various devices (e.g., the PADs **110**, the VADs **120**, and the WDUs **130**) dedicated GNSS resources (e.g., receivers, antennas, etc.) and/or by configuring them to use existing GNSS resources where possible (e.g., use of existing positioning application in the train **101** by the VAD **120**).

The alerts may be triggered only when a preset (programmed) alert trigger threshold is satisfied (e.g., vehicle's speed exceeding particular limit, distance to workers falling below particular value, etc.). In certain implementation, multiple threshold types may be used. For example, in one example implementation, three alert threshold types may be used: time-to-arrival (TTA), distance-from-train (DFT), and low-speed close proximity distance alert (CPD). These different types of thresholds may be applicable at different conditions. For example, at low speeds, below a configurable speed threshold, the workers will not get TTA or DFT alerts; rather, the alert triggering is held off until the train/vehicle comes within a programmed short distance. This may avoid triggering DFT alert prematurely (time-wise), when it still might be a long time (e.g., minutes) until the train arrives due to its low speed.

In certain implementations, worker protection systems in accordance with the present disclosure, such as the worker protection system **100**, may support location-specific rule customization. For example, an operator (e.g., a transit agency) may desire modified alerting rules at particular areas/locations (e.g., due to unique geography, or greater difficulty in seeking safe shelter, etc.). Thus, alert devices

that are intended for use in such areas/locations may be reconfigured dynamically. This may be done by use of (re-)customization stations at entry points to those areas/locations, to reconfigure the alert devices dynamically. This may be done using near field communication rule modification. The alert units may be placed in proximity to the customization stations briefly, and the rules are then updated. Further, indications (e.g., visual, audible, etc.) of successful (or failed) rule changes may be provided. In some instances, the special/customized rules may be configured to expire, such as after a certain period of time, after next power down or charging cycle, etc.

In certain implementations, worker protection systems in accordance with the present disclosure, such as the worker protection system **100**, may be configured to provide alerts for both the vehicle operator as well as all workers. The worker protection system **100** may be configurable based on user preferences and/or parameters. For example, the worker protection system **100** may be configured to operate (trigger alerts) within operator-configurable combinations of distances, speeds, location, etc. Further, the PADs **110** may be customized to operate according to individual organizations' rules and regulations.

In certain implementations, worker protection systems in accordance with the present disclosure, such as the worker protection system **100**, may be operable to allow assignment and/or unique identification of vehicle-mounted units (i.e., VADs **120**), such that the wearable units (PADs **110**), as well as the wayside units (WDUs **130**) would only respond to alerts corresponding to particular tracks. In other words, each VAD **120** would be identified uniquely, and assigned to a particular track, to enable only PADs **110** and/or WDUs **130** used by workers on that particular track to respond to alerts triggered by that VAD **120**, while ignoring other VADs **120** (thus avoiding false alerts).

In certain implementations, worker protection systems in accordance with the present disclosure, such as the worker protection system **100**, may be configured to provide optimized power performance (e.g., power supply, power consumption, etc.). In this regard, the power supply may be adaptively selected and/or configured for each of different devices in the worker protection system **100**, based on the type and/or working conditions for the device. For example, the PAD **110** may be powered using integrated power supply (e.g., batteries or similar power sources). In this regard, rechargeable batteries may be used, allowing the recharging of the device when not in use (e.g., being inserted or docked into charging stations at the end of each day to be charged for work the following day. The VAD **120** may be powered by the vehicle to which it is mounted or integrated. The WDU **130** may be powered using integrated power supply (e.g., batteries or similar power sources), which may be rechargeable.

Further, certain solutions may be incorporated and/or used to enhance overall power consumption. For example, the PAD **110** may be configured to support one or more power-saving modes (e.g., modes with the PAD **110**, or at least some of the components thereof, transitioning to low functionality states, or completely shutting down). The PAD **110** may be operable to facilitate transitioning back to full functionality (or powering up) when necessary. For example, the PAD **110** may be configured to automatically shut down when it is not being used (e.g., when placed in a charger or docking bay for recharging). Further, the PAD **110** may be operable to dynamically determine when to transition to (or from) power saving modes. For example, the PAD **110** may comprise a component (e.g., accelerometer) for determining when the device is idle for an extended period of time, and respond to that by entering power saving mode (e.g., shut down, or operate with less frequent polling). Such accelerometer detects the lack of motion for a period of time to enter the power-saving mode; then trigger return to normal operating mode when movement is detected.

In certain implementations, worker protection systems in accordance with the present disclosure, such as the worker protection system **100**, may be configured to provide logging and data recording. The logging and data recording may be used, for example, for training, for location tracking, and/or for even recreating (e.g., during accident investigation). For example, the PAD **110** may comprise circuitry for data recording and/or logging—e.g., to compile downloadable log files, which may be accessible (remotely, such as via any available communication means, or by direct connection to the PAD **110**, such as when the device is docked for recharging). Such log files are then available to allow examination of alerts as well as related events and/or activities (e.g., users' responses, such as alert silencing actions). The VADs **120** and/or the WDUs **130** may similarly be configured to support logging of worker protection/alert related information, such as by also compiling downloadable log files that are available when needed. The log files may contain data recording triggered alerts and related information (e.g., alerts' times and/or location, distances to workers and traveling speed within work zone workers' acknowledgment or response actions, etc.), as well as other information relating to, e.g., faults, mechanical shock over thresholds, etc. Further, logs may include GPS positioning information (e.g., coordinate of locations of alerts), time of events, compass bearing, received signal strength, and antenna used, when available.

In certain implementations, worker protection systems in accordance with the present disclosure, such as the worker protection system **100**, may be incorporate various communication techniques for optimizing performance, with respect to the broadcast, reception, and processing of signals used in triggering alerts. For example, the PAD **110** may incorporate diversity antennas of identical or differing polarity, to improve signal reception reliability. Use of such diversity antennas (with corresponding signal processing functions) allows for improved performance in certain conditions, such as when the worker **105** is not in the optimal position of antenna orientation.

In certain implementations, worker protection systems in accordance with the present disclosure, such as the worker protection system **100**, may be configured to provide backward compatibility with existing protection solutions and/or protocols. Further, it may be particularly designed and implemented such that it may be integrated into future communications based train control systems.

In certain implementations, multiple devices in worker protection systems in accordance with the present disclosure, such as the worker protection system **100**, may be configured to operate collaboratively, to ensure that alerts are received by all workers. For example, the PADs **110** and/or the WDUs **130** may be configured to relay alerts (e.g., of approaching trains) to other devices nearby, thus improving the field strength of warning signals, by increasing the probability that all nearby PADs **110** receive the alert (even devices that may have not been able to receive the signals/alerts directly).

The various devices (PADs, VADs, WDUs) used in the worker protection systems may be designed and/or implemented to meet certain operational requirements (relating to, e.g., shock/vibration, temperature/humidity, salt conditions,

icing, hose down, electrostatic discharge (ESD), electromagnetic compatibility (EMC), electromagnetic interference (EMI), electromagnetic compatibility, etc.) in accordance with particular standards that may be pertinent to the related industries (MIL-STD-810, AREMA 11.5.1, IEC 61000-4, SAE J1113, CISPR 22, FCC Title 47, Association of American Railroads (AAR) All Applicable AAR S-9401, etc.).

Accordingly, worker protection systems in accordance with the present disclosure, such as the worker protection system **100**, with many of the components being portable and/or configurable, offer portability and ease of configuration, allowing them to be set up in any work environment seamlessly.

FIG. **1**B illustrates example use scenarios of a work protection system (e.g., the work protection system **100** of FIG. **1**A), in accordance with the present disclosure. In this regard, the different use scenarios may be based on which of and how the different devices in the work protection system **100**—that is the PADs **110**, the VADs **120**, and the WDUs **130**—interact during operation of the system, to provide the intended protection.

For example, in a first use scenario (denoted as 'A' in FIG. **1**B), only worker wearable devices (PADs **110**) and vehicle-mounted devices (VADs **120**) are used—i.e., no wayside devices (WDUs **130**) are used. In other words, as shown in FIG. **1**B, the train **101** is equipped with a VAD **120**, which broadcasts signals to interface with the PADs **120** worn by worker(s) **105**, to detect if the train **101** is in proximity where an alarm is activated. In this regard, the PADs **120** will issue an alert (e.g., audible alarm) once they are detected by any train-based VAD **120**, such as within a specified distance. On the vehicle side, the VAD **120** may further provide information to the operator when the PADs **120** are detected. For example, a user interface may indicate such information as how many PADs **120** (and thus worker(s) **105**) are present within the specified distance. Further, the workers and/or operators may respond to issued alarms—e.g., silencing them, such as by acknowledging them on the wearable devices and/or on the user interface of the vehicle mounted devices.

In a second use scenario (denoted as 'B' in FIG. **1**B), no vehicle-mounted devices (VADs **120**) are used; rather, the worker wearable devices (PADs **110**) are only in communication with the wayside devices (WDUs **130**). In this regard, the wayside devices monitor for and detect approaching vehicles (e.g., the train **101**), broadcast alarms (or signals triggering alarms) when a vehicle is in proximity (e.g., determined when at particular distance from the wayside device and/or moving at particular speed). For example, when the train **101** is detected by the WDU **130** (e.g., when it passes it, or moves within certain distance from it, at particular speed), it sends a proximity warning to all local PADs **110**. Once the alarms is triggered at the wearable devices, they may continue until acknowledged by the workers—e.g., audible alarms continue until silenced, such as by hitting a "confirm" button.

In a third use scenario (denoted as 'C' in FIG. **1**B), all three types of devices—that is worker wearable devices (PADs **110**), vehicle-mounted devices (VADs **120**) and wayside devices (WDUs **130**)—are used, and may communicate with one another to provide the desired protection. In such scenarios, a worker wearable device may be activated and/or triggered by vehicle-mounted devices as well as wayside devices, for redundancy (thus enhanced protection). For example, the train **101** may be equipped with the VAD **120**, which may communicate directly with the WDU **120** as the train **101** approaches it, such as when the train **101** is at a specified distance. In response, the WDU **130** may send proximity warnings (trigger alarms) to all local PADs **110**. Under certain conditions (e.g., at particular distance and/or speed), the VAD **120** may communicate directly with the local PADs **110**, to trigger alarm (which may be configured differently, such as for heightened risk).

FIG. **2**A illustrates an example portable alert device (PAD), in accordance with the present disclosure. Shown in FIG. **2**A is a portable alert device (PAD) **200**.

The PAD **200** may comprise suitable one or more of hardware (including circuitry and/or other hardware components), software, and combination thereof for implementing various aspects of the present disclosure, particularly with respect to the support of portable wearable functionality in worker protection solutions, as described above. The PAD **200** may be a particular example implementation of the PAD **110**, as described with respect to FIGS. **1**A and **1**B. In this regard, as noted above PADs may be configured as portable devices that are wearable by users (e.g., workers) to provide alerts regarding approaching vehicles that may pose safety threats to workers at particular locations. The PAD **200** is operable to perform such functions, in support of work protection systems in accordance with the present disclosure, as receiving alerts (or triggering alerts in response to broadcast warning signals) and providing alert indications to the user (the worker wearing the device), as well as additional alert related functions, such logging alert related data, etc.

In the example implementation illustrated in FIG. **2**A, the PAD **200** may comprise a housing **210** for enclosing various components of the PAD **200**. The housing **210** may be constructed to be suitable for the intended operations (and environment and/or conditions thereof) of the PAD **200** (e.g., strong enough to withstand harsh work environment but light enough as to not encumber the worker or hinder his/her activities), and to withstand environmental conditions associated with outside/external use (e.g., rain, extreme cold/heat), etc.).

The PAD **200** may comprise (or may be integrated with) an attachment structure **260**, for facilitating the wearability of the PAD **200**, by enabling the PAD **200** to be attached to the worker and/or to item used by the worker (e.g., clothing, equipment, etc.). In this regard, the PAD **200** may support various types of attachment structures, to allow worker to select preferable way for apply the device. For example, as shown in FIG. **2**A, the PAD **200** may comprise or be coupled to a clip structure **260**, so that the PAD **200** may be clipped onto the worker's clothing, belt, etc. In another implementation (not shown), the PAD **200** may comprise or be coupled to a strap structure, so that the PAD **200** may be attached around the worker's wrist.

The PAD **200** has one or more antennas **240**, which may be integrated or enclosed within the housing **210**, configured for transmitting and/or receiving signals (e.g., broadcast alert related signals). As noted above, PADs may support use of various optimization techniques, including use of diversity, and as such the antennas **240** may comprise diversity antennas of identical or differing polarity.

The PAD **200** may have an integrated/internal power supply **230**, for powering the various components of the PAD **200**. In this regard, the power supply **230** may be rechargeable. For example, charging stations (an example of which is described with respect to FIG. **2**B) may be used. The recharging of the power supply **230** may be done in various ways, including by use of charging stations (an example of which is described with respect to FIG. **2**B) for example. In this regard, the PAD **200** may be connected

(e.g., coupled, inserted, docked, etc.) to the charging station when it is not being used (e.g., at the end of each day) to be charged.

The PAD **200** may comprise suitable circuitry **220** for performing various operations in support of its functions. For example, the circuitry **220** may be operable to store data (including code); run and/or execute various applications and/or functions (alert related); handle transmission and/or reception of signals (and processing transmitted and/or received signals); provide power management; manage logging operations in the PAD **200**; and handle input/output functions (e.g., supporting different forms of alert indications, including visual, audio, and/or tactile, and handling user input, such as acknowledges of alerts).

As shown in FIG. **2**A, the PAD **200** comprises a visual indicator (e.g., LED) **212** and an audio indicator (e.g., speaker) **214**, which are integrated into the housing **210**, and are configured to provide visual and/or audio indication in response to triggering of alerts. Also, within the housing **210**, the PAD **200** comprises a vibration motor **234**, which may be configured to cause vibrations in response to triggering of alerts. The PAD **200** may be configured to use one or more of available indications means—e.g., one or more of visual, audio, and tactile indications. This may be done based on pre-set criteria, user selected preferences, dynamic configuration of the device, etc.

Further, as shown in FIG. **2**A, the PAD **200** comprises a confirmation button **216**, which is configured to receive indication of user acknowledgment (e.g., by pressing the confirmation button **216**), when alert indication(s) is/are outputted. In some instances, the PAD **200** may, in response to receiving user confirmations, generate and transmit acknowledge messages, to other alert devices (e.g., PADs, WDUs, and/or VADs broadcasting and/or forwarding signals triggering alerts that were confirmed).

In some example implementations, PADs in accordance with the present disclosure (such as, e.g., the PAD **200**) may not have any openings for connectors or the like (for enhanced rigidity and/or protection against the elements). The functions of the PADs may be configured to account for and/or accommodate such design.

For example, only wireless communications are used such as using near field communications (NFC), for communication of data, and charging of the power supply fs performed indirectly, such as using magnetic induction. Thus, as shown in FIG. **2**A, the PAD **200** comprises a NFC component **236** for supporting NFC transmission and/or reception. Further, the PAD **200** comprises a charging element **232**, for enabling (re)charging the power supply **230** in connectless manner—e.g., without requiring plugging a power cord or other wired cabling. The charging element **232** may comprise an inductive charging coil, for example. The PAD may also include an environmentally sealed button to allow the operator to perform alarm confirmation and silencing.

FIG. **2**B illustrates an example charging station for use in conjunction with portable alert devices (PADs), in accordance with the present disclosure. Shown in FIG. **2**B is a PAD charging station **280**, which may be used in conjunction with portable alert devices (PADs), such as the PAD **200** of FIG. **2**A.

The PAD charging station **280** may comprise suitable one or more of hardware (including circuitry and/or other hardware components), software, and combination thereof for implementing various aspects of the present disclosure, particularly with respect to the support of portable alert devices (PADs). In this regard, the main function of the PAD charging station **280** may be (re)charging PADs (e.g., the PAD **200** of FIG. **2**A). The PAD charging station **280** may support additional functions, however. For example, the PAD charging station **280** may support and/or facilitate exchange of data with the PADs, such as to enable extraction of data from the PADs (e.g., log files) and/or input of data into the PAD (e.g., (re)configuration data), etc.

As shown in the example implementation illustrated in FIG. **2**B, the PAD charging station **280** may comprise a housing **290** for enclosing various components of the PAD **200**. The housing **290** may be constructed to be suitable for intended uses and/or functions of the PAD charging station **280**. For example, the housing **290** may be configured such that it defines a space into which the supported PADs (e.g., the PAD **200** of FIG. **2**A) may be inserted and/or docked.

The PAD charging station **280** may comprise various components for supporting and/or enabling charging power supplies of supported PADs. In this regard, the PAD charging station **280** (and charging related components thereof) may be configured to facilitate the charging in the manner required by the supported PADs. For example, in the example implementation illustrated in FIG. **2**B, the PAD charging station **280** comprises a charging element **282** integrated within the housing **290**, and configured for supporting recharging in connectless manner. The charging element **282** may comprise an indicative charging coil, for example, for enabling (re)charging by induction.

The PAD charging station **280** may comprise a data port **286** for extracting data from and/or inputting data into the PADs, while docked into the PAD charging station **280**. Further, the PAD charging station **280** may comprise suitable communication circuitry for facilitating the actual exchange of data with the docked PADs. For example, the data exchanges may be done via near field communication (NFC) connections, and as such the PAD charging station **280** may comprise an NFC component **288** for supporting such communications.

In some instances, the PAD charging station **280** may comprise input and/or output (I/O) component for use in conjunction with operations of the PAD charging station **280**. For example, the PAD charging station **280** may comprise a visual status indictor (e.g., LED) **284**, integrated within the housing **290**, to provide useful feedback (e.g., indication when charging, data extraction, data input, etc. is complete).

FIG. **3** illustrates an example Vehicle Alert Device (VAD), in accordance with the present disclosure. Shown in FIG. **3** is a vehicle alert device (VAD) **300**.

The VAD **300** may comprise suitable one or more of hardware (including circuitry and/or other hardware components), software, and combination thereof for implementing various aspects of the present disclosure, particularly with respect to the vehicle-mounted functionality in support of worker protection. The VAD **300** may be a particular example implementation of the VAD **120**, as described with respect to FIGS. **1**A and **1**B. In this regard, as noted above VADs may be configured as portable (moveable) devices or as permanent components integrated into vehicles. The VAD **300** is operable to perform such functions, in support of work protection systems in accordance with the present disclosure, as broadcasting signals configured for interfacing with wearable devices (e.g., PADs **100**), as well as additional alert related functions, such alert-related interactions with vehicle operators (e.g., to indicate when worker(s) is/are detected, for example by sounding a warning and/or providing a visual indicators, and/or displaying related infor-

mation, such as the quantity of workers detected, and the approximate distance to the workers), logging alert related data, etc.

While VADs may be implemented as singular devices (that is within a single housing incorporating and/or attaching all components of the VAD), in some implementations, such as the example implementation illustrated in FIG. **3**, VADs may be implemented in a distributed manner—e.g., comprising a plurality of physical units, each of which may be placed at particular location and/or position, selected for optimal performance with respect to functions and/or operations provided by that unit. For example, as shown in FIG. **3**, the VAD **300** may comprise a VAD operator unit **310**, a VAD antenna unit **320**, and a VAD (main) controller unit **330**.

The VAD operator unit **310** may comprise components for supporting interactions with the vehicle operator—e.g., to received user input and/or provide user feedback relating to operation of the VAD **300** and/or to alerts. For example, the VAD operator unit **310** may comprises input/output (I/O) components (and related circuitry and/or support hardware), such as a display **312** and user controls **314**, to enable user interactions. Further, the VAD operator unit **310** may comprise and/or be operable to utilize I/O components configured for providing indications relating to triggering of alerts and/or receiving feedback (e.g., confirmation) relating to such indications. For example, the VAD operator unit **310** may comprise a speaker (not shown), configured for providing audible indications of triggered alerts, a visual status indicator (e.g., LED) **318**, configured for providing visual indication of triggered alerts, and a configuration button **316**, configured to receive indication of user acknowledgment (e.g., by pressing the confirmation button **316**), when alert indication(s) is/are outputted. The user controls **314** may comprise various types of user input elements, such as buttons, dials, etc. for allowing vehicle operator(s) or device users to provide input, such as to configure the VAD **300** and/or its operations, to respond to alerts (when triggered), etc. The user controls **314** may be implemented in the form of a touch screen (e.g., as part of the display **312**), or be implemented with an alpha-numeric display. The display **312** (or any type of user interface) may be used to provide the vehicle operator with various information, such as alert related data (e.g., indicate the quantity of workers detected, and the approximate distance to the workers, calculated time till reaching the workers, etc.).

In some instances, rather than incorporating dedicated I/O components, the VAD **300** (or the VAD operator unit **310**) may be operable to connect to and use existing I/O components (e.g., displays, speakers, etc.) in the vehicle, thus obviating the need to (and cost of) incorporating such dedicated components. For example, the VAD operator unit **310** may be operable to utilize existing audio systems to provide audible indication of triggered alerts.

The VAD antenna unit **320** may comprise one or more antennas **340** (and related circuitry and/or support hardware), configured for use in transmitting and/or receiving signals (e.g., broadcast alert related signals, receiving signal indicating triggering of alerts and/or confirmation of such alerts by workers, etc.). In some implementations, however, the VAD antenna unit **320** may not incorporate dedicated antennas, and may instead simply comprise connecting means (e.g., coaxial connectors for wiring) to existing and/or external antennas in the vehicle.

The VAD controller unit **330** may comprise suitable circuitry for performing (remaining) operations and/or functions of the VAD **300**. The VAD controller unit **330** may comprise, for example, one or more main processors **350**, a system memory **352**, a communication subsystem **354**, an input/output (I/O) subsystem **356**, and a logging management component **358**.

Each main processor **350** may comprise suitable circuitry operable to process data, and/or control and/or manage operations of the VAD **300**, and/or tasks and/or applications performed therein. In this regard, the main processor **350** may configure and/or control operations of various components and/or subsystems of the VAD **300**, by utilizing, for example, one or more control signals. The main processor **350** may comprise a general purpose processor (e.g., CPU), a special purpose processor (e.g., application-specific integrated circuit (ASIC)), or the like. The disclosure, however, is not limited to any particular type of processors. The main processor **350** may enable running and/or execution of applications, programs and/or code, which may be stored, for example, in the system memory **352**. Alternatively, one or more dedicated application processors may be utilized for running and/or executing applications (or programs) in the VAD **300**.

The system memory **352** may comprise suitable circuitry for permanent and/or non-permanent storage, buffering, and/or fetching of data, code and/or other information, which may be used, consumed and/or processed. In this regard, the system memory **352** may comprise different memory technologies, including, for example, read-only memory (ROM), random access memory (RAM), Flash memory, solid-state drive (SSD), and/or field-programmable gate array (FPGA). The disclosure, however, is not limited to any particular type of memory or storage devices. The system memory **352** may store, for example, configuration data, which may comprise parameters and/or code, comprising software and/or firmware, logging data, etc.

The communication subsystem **354** may comprise suitable circuitry operable to communicate signals from and/or to the electronic device, such as via one or more wired and/or wireless connections. In this regard, the communication subsystem **354** may be configured to support one or more wired or wireless interfaces, protocols, and/or standards, and to facilitate transmission and/or reception of signals to and/or from the VAD **300**, and/or processing of transmitted and/or received signals, in accordance with the applicable interfaces, protocols, and/or standards. Examples of signal processing operations that may be performed by the communication subsystem **354** comprise, for example, filtering, amplification, analog-to-digital conversion and/or digital-to-analog conversion, up-conversion/down-conversion of baseband signals, encoding/decoding, encryption/decryption, and/or modulation/demodulation. For example, the communication subsystem **354** may be configured to support broadcast of alert related signals, via the antenna(s) **340**.

The I/O subsystem **356** may comprise suitable circuitry for managing user interactions with the VAD **300**, such as to enable obtaining input from and/or providing output to device user(s). The I/O subsystem **356** may support various types of inputs and/or outputs, including, for example, video, audio, tactile, and/or textual. In this regard, dedicated I/O devices and/or components, external to (and coupled with) or integrated within the VAD **300**, may be utilized for inputting and/or outputting data during operations of the I/O subsystem **356**. Examples of such dedicated I/O devices may comprise user interface components or devices (e.g., the display **312**), audio I/O components (e.g., speakers and/or microphones), mice, keyboards, touch screens (or touchpads), and the like. In some instances, user input

obtained via the I/O subsystem **356**, may be used to configure and/or modify various functions of particular components or subsystems of the VAD **300**.

The logging management component **358** may comprise suitable circuitry for managing logging operations in the VAD **300**. The logging operations may comprise compiling log files (stored in the system memory **352**) containing data relating to alerts, as described above.

Also, while not shown in FIG. **3**, the VAD controller unit **330** may also comprise component for managing power supply (e.g., to the VAD controller unit **330** itself, and/or to other units, such as the VAD operator unit **310**).

As noted above, as shown in the example implementation illustrated in FIG. **3**, the VAD **300** may be implemented as multi-unit system, comprising multiple separate components (the VAD operator unit **310**, the VAD antenna unit **320**, and the VAD controller **330**). In this regard, as noted each of the different physical unit may be configured for placement at particular location and/or position, selected for optimal performance with respect to functions and/or operations provided by that unit. For example, the VAD operator unit **310** may be configured for placement within the operator compartment (e.g., train cockpit) at position optimal for providing output to and/or receiving input from the operator (e.g., top of the dashboard). The VAD antenna unit **320**, may be configured for placement outside (and on top) of the engine car. The VAD controller unit **330** may be configured for placement within the engine car, but out of the way (for convenience).

As the VAD controller unit **330** may house the bulk of the VAD resources (e.g., processing resources, storage resources, etc.), the VAD controller **330** may be configured to support connect to and/or communicate with the remaining unit(s) and/or available resources that may be utilized in support of operations of the VAD **300**. For example, the VAD controller unit **330** may comprise data port **340**, for enabling connecting to the VAD **300** for extracting data therefrom (e.g., log files) and/or inputting data thereto (e.g., for (re)configuration); a power connector **342** (e.g., drawing power from sources within the train); a VAD operator unit (VOU) connector **344**; configured for connecting to the VAD operator unit **320** (e.g., to provide power thereto, exchange data therewith, etc.); one or more antenna connectors **346** (e.g., for connecting to the VAD antenna unit **320**, existing antennas in the train, etc.); one or more GNSS connectors **348**, for connecting to existing GNSS systems (or transceivers); etc.

FIG. **4** illustrates an example wayside detection unit (WDU), in accordance with the present disclosure. Shown in FIG. **4** is a wayside detection unit (WDU) **400**.

The WDU **400** may comprise suitable one or more of hardware (including circuitry and/or other hardware components), software, and combination thereof for implementing various aspects of the present disclosure, particularly with respect to the wayside detection and/or alert related functions in support of worker protection solutions. The WDU **400** may be a particular example implementation of the WDU **130**, as described with respect to FIGS. **1**A and **1**B. In this regard, as noted above WDUs may be configured as portable (moveable) devices that are placed along the expected path (e.g., train tracks) of vehicles that may pose safety threats to workers at particular locations. The WDU **400** is operable to perform such functions, in support of work protection systems in accordance with the present disclosure, as detecting approaching vehicles, triggering alerts at wearable devices (e.g., by broadcasting signals configured for interfacing with the wearable devices (e.g., PADs **100**) to trigger the alerts thereby), and triggering critical alarms when a train enters a work area, as well as additional alert related functions, such logging alert related data, etc.

In the example implementation illustrated in FIG. **4**, the WDU **400** may comprise a housing **410** for enclosing various components of the WDU **400** and/or allowing attachment to certain external elements or structures. The housing **410** may be constructed to be suitable for the intended operation environment and/or conditions of the WDU **400** (e.g., being constructed to be very rigid, to withstand accidental impacts during deployment and/or when it knocked down), and to withstand environmental conditions associated with outside/external use (e.g., rain, extreme cold/heat), etc.). The WDU **400** has one or more antennas **440**, used in transmitting and/or receiving signals (e.g., broadcast alert related signals). Further, the WDU **400** may have sensory elements, such as a train detector **430**. In this regard, the train detector **430** may be operable to monitor, detect, and track approaching vehicle, using one or more suitable technologies (e.g., visual, infrared, laser ranging, etc.), and/or to enable generating corresponding data (distance, relative speed, etc.). The WDU **400** typically would also comprise (or can be coupled to) a support structure **420**, such as a rigid tripod, to enable placement of the WDU **400**, such as near train tracks.

Internally, the WDU **400** may comprise suitable circuitry for performing various operations in support of its functions. For example, the WDU **400** may comprise one or more main processors **450**, a system memory **452**, a communication subsystem **454**, a sensor management component **456**, and a logging management component **458**.

Each main processor **450** may comprise suitable circuitry operable to process data, and/or control and/or manage operations of the WDU **400**, and/or tasks and/or applications performed therein. In this regard, the main processor **450** may configure and/or control operations of various components and/or subsystems of the WDU **400**, by utilizing, for example, one or more control signals. The main processor **450** may comprise a general purpose processor (e.g., CPU), a special purpose processor (e.g., application-specific integrated circuit (ASIC)), or the like. The disclosure, however, is not limited to any particular type of processors. The main processor **450** may enable running and/or execution of applications, programs and/or code, which may be stored, for example, in the system memory **452**. Alternatively, one or more dedicated application processors may be utilized for running and/or executing applications (or programs) in the WDU **400**.

The system memory **452** may comprise suitable circuitry for permanent and/or non-permanent storage, buffering, and/or fetching of data, code and/or other information, which may be used, consumed and/or processed. In this regard, the system memory **452** may comprise different memory technologies, including, for example, read-only memory (ROM), random access memory (RAM), Flash memory, solid-state drive (SSD), and/or field-programmable gate array (FPGA). The disclosure, however, is not limited to any particular type of memory or storage devices. The system memory **452** may store, for example, configuration data, which may comprise parameters and/or code, comprising software and/or firmware, logging data, etc.

The communication subsystem **454** may comprise suitable circuitry operable to communicate signals from and/or to the electronic device, such as via one or more wired and/or wireless connections. In this regard, the communication subsystem **454** may be configured to support one or

more wired or wireless interfaces, protocols, and/or standards, and to facilitate transmission and/or reception of signals to and/or from the WDU **400**, and/or processing of transmitted and/or received signals, in accordance with the applicable interfaces, protocols, and/or standards. Examples of signal processing operations that may be performed by the communication subsystem **454** comprise, for example, filtering, amplification, analog-to-digital conversion and/or digital-to-analog conversion, up-conversion/down-conversion of baseband signals, encoding/decoding, encryption/decryption, and/or modulation/demodulation. For example, the communication subsystem **454** may be configured to support broadcast of alert related signals, via the antenna(s) **440**.

The sensor management component **456** may comprise suitable circuitry for managing sensors, such as the train detector **430**. For example, the sensor management component **456** may control the selection of detection and ranging technology implemented by the train detector **430**, set the parameters required for its operations, and/or process information obtained via the train detector **430**, to generate corresponding data (e.g., distance to approaching train, relative speed, etc.).

The logging management component **458** may comprise suitable circuitry for managing logging operations in the WDU **400**. The logging operations may comprise compiling log files (stored in the system memory **452**) containing data relating to alerts, as described above.

The WDU **400** may comprise a data port **460** for extracting data (e.g., log files) from and/or inputting data (e.g., (re)configuration data) into the WDU **400**.

Other embodiments of the invention may provide a non-transitory computer readable medium and/or storage medium, and/or a non-transitory machine readable medium and/or storage medium, having stored thereon, a machine code and/or a computer program having at least one code section executable by a machine and/or a computer, thereby causing the machine and/or computer to perform the processes as described herein.

Accordingly, various embodiments in accordance with the present invention may be realized in hardware, software, or a combination of hardware and software. The present invention may be realized in a centralized fashion in at least one computing system, or in a distributed fashion where different elements are spread across several interconnected computing systems. Any kind of computing system or other apparatus adapted for carrying out the methods described herein is suited. A typical combination of hardware and software may be a general-purpose computing system with a program or other code that, when being loaded and executed, controls the computing system such that it carries out the methods described herein. Another typical implementation may comprise an application specific integrated circuit or chip.

Various embodiments in accordance with the present invention may also be embedded in a computer program product, which comprises all the features enabling the implementation of the methods described herein, and which when loaded in a computer system is able to carry out these methods. Computer program in the present context means any expression, in any language, code or notation, of a set of instructions intended to cause a system having an information processing capability to perform a particular function either directly or after either or both of the following: a) conversion to another language, code or notation; b) reproduction in a different material form.

While the present invention has been described with reference to certain embodiments, it will be understood by those skilled in the art that various changes may be made and equivalents may be substituted without departing from the scope of the present invention. In addition, many modifications may be made to adapt a particular situation or material to the teachings of the present invention without departing from its scope. Therefore, it is intended that the present invention not be limited to the particular embodiment disclosed, but that the present invention will include all embodiments falling within the scope of the appended claims.

What is claimed is:

1. A system for worker protection, the system comprises:

a train-mounted unit for use on a train, wherein the train-mounted unit comprises:

a communication component, comprising one or more antennas, configured to transmit and/or receive wireless signals, wherein the signals comprise ultra-wideband (UWB) signals; and

one or more circuits configured to process signals and data, and perform one or more applications or functions relating to operations of the train-mounted unit; and

wherein the train-mounted unit is configured to operate cooperatively with one or more wayside units, configured for placement on or near a track traversed by the train, to provide alerts to one or more workers operating on or near the track, based on communication of the UWB signals with at least one of the one or more wayside units.

2. The system of claim **1**, wherein the train-mounted unit is configured to broadcast alert triggering signals.

3. The system of claim **1**, wherein the train-mounted unit is configured to generate data relating to alerts and/or to other devices or objects in a path of the train, based on the communication of the UWB signals with at least one of the one or more wayside units.

4. The system of claim **1**, wherein the train-mounted unit is configured to generate feedback information for outputting to an operator of the train, based on the communication of the UWB signals with at least one of the one or more wayside units.

5. The system of claim **1**, wherein the train-mounted unit is configured to:

receive a signal indicating an acknowledgment of a safety alert by a worker of the one or more workers, in response to broadcasted alert triggering signals; and

provide an indication of the acknowledgement to an operator of the train.

6. The system of claim **1**, wherein the train-mounted unit is configured to log data relating to alerts triggered in response to movement of the train.

7. The system of claim **1**, wherein the train-mounted unit comprises one or more input/output (I/O) components, for receiving input from an operator of the train and/or for providing output to the operator of the train.

8. The system of claim **1**, wherein the train-mounted unit comprises housing for enclosing components of the train-mounted unit.

9. The system of claim **1**, wherein the train-mounted unit is configured, at least in part, as portable, detachable and moveable from the train.

10. The system of claim **1**, wherein the train-mounted unit is arranged into a plurality of separate physical units that comprises at least a broadcast unit comprising at least the communication component, and wherein the broadcast unit is configured for deployment external to the train.

11. The system of claim 10, wherein the plurality of separate physical units comprises an operator unit comprising at least the one or more I/O components, and wherein the operator unit is configured for use by an operator of the train.

12. A system for worker protection, the system comprises:

one or more wayside units configured for placement on or near a track; wherein each wayside unit comprises:

a communication component, comprising one or more antennas, configured to transmit and/or receive wireless signals, wherein the signals comprise ultra-wideband (UWB) signals; and

one or more circuits configured to process signals and data, and perform one or more applications or functions relating to operations of the wayside detection unit; and

wherein the one or more wayside units are configured to operate cooperatively with any train-mounted unit deployed on a train traversing the track, to provide alerts to one or more workers operating on or near the track, based on communication of the UWB signals between at least one of the one or more wayside units and the train-mounted unit.

13. The system of claim 12, wherein each wayside unit comprises a power supply for powering components of the wayside unit.

14. The system of claim 12, wherein each wayside unit comprises a housing for enclosing components of the wayside unit.

15. The system of claim 12, wherein each wayside unit comprises a support structure for holding and supporting the wayside unit when placed on or near the track.

16. The system of claim 12, wherein at least one wayside unit is configured to broadcast alert related signals, relating to the train when approaching the wayside unit.

17. The system of claim 12, wherein at least one wayside unit is configured to forward alerts and/or alert related signals received from the train-mounted unit.

18. The system of claim 12, wherein at least one wayside unit is configured to log data relating to alerts triggered in response to broadcasted alert related signals.

19. The system of claim 12, wherein at least one wayside unit comprises one or more sensory components, for detecting, monitoring, and/or tracking trains, and

wherein the at least one wayside unit configured to determine, based on sensory data obtained from the one or more sensors, when the train is approaching the wayside unit.

20. A system for protecting workers near railroad tracks, comprising:

one or more UWB radios at pre-determined locations along the railroad tracks;

one or more worker UWB radios associated with one or more workers on or near the railroad tracks;

a vehicle UWB radio associated with a vehicle on the railroad track;

wherein:

the vehicle UWB radio is in communication with a processor, wherein:

the processor determines a position of the vehicle based on time of flight measurements obtained based on communication between the vehicle UWB radio and at least one of the one or more UWB radios that are located at pre-determined locations;

the processor determines a location in which the one or more workers are working based on time of flight information obtained based on communication with at least one of the one or more worker UWB radios; and

the processor generates an alert to an operator of the vehicle based on the determined location of the one or more workers; and

at least one worker UWB radio communicates time of flight information between the at least one worker UWB radio and the vehicle UWB radio to a processor in communication with the at least one worker UWB radio, wherein the processor generates alerts to a worker associated with the at least one worker UWB radio based on one or more of: a determined distance to the vehicle UWB radio, an estimated time of closest approach of the vehicle UWB radio to a location of the at least one worker UWB radio, and an approach speed of the vehicle UWB radio.

* * * * *

EXHIBIT E

US010179595B2

(12) **United States Patent**
Carlson et al.

(10) **Patent No.: US 10,179,595 B2**
(45) **Date of Patent: Jan. 15, 2019**

(54) **WORKER PROTECTION SYSTEM**

(71) Applicant: **Metrom Rail, LLC**, Lake Zurich, IL (US)

(72) Inventors: **Richard Carlson**, Woodstock, IL (US); **Kurt Gunther**, Leland, IL (US); **Sara Jo Woitel**, Lake Zurich, IL (US); **Marc Wayne Cygnus**, Mundelein, IL (US); **Peter Strezev**, Apollo Beach, FL (US); **John Albert Plutt, Jr.**, Chicago, IL (US)

(73) Assignee: **METROM RAIL, LLC**, Crystal Lake, IL (US)

(*) Notice: Subject to any disclaimer, the term of this patent is extended or adjusted under 35 U.S.C. 154(b) by 210 days.

(21) Appl. No.: **15/078,427**

(22) Filed: **Mar. 23, 2016**

(65) **Prior Publication Data**

US 2016/0280240 A1 Sep. 29, 2016

Related U.S. Application Data

(60) Provisional application No. 62/177,683, filed on Mar. 23, 2015.

(51) **Int. Cl.**

B61L 15/00	(2006.01)
B61L 23/06	(2006.01)
B61L 25/02	(2006.01)
G01S 19/17	(2010.01)

(52) **U.S. Cl.**

CPC ***B61L 23/06*** (2013.01); ***B61L 15/0027*** (2013.01); ***B61L 25/021*** (2013.01); ***B61L 25/025*** (2013.01); ***G01S 19/17*** (2013.01); *B61L 2205/02* (2013.01); *B61L 2205/04* (2013.01)

(58) **Field of Classification Search**

CPC B61L 23/06; B61L 23/34; B61L 25/02; G08B 1/08; G08B 13/2488; G08B 21/02; G08B 21/18; G08F 1/123; G08F 1/16; G08F 1/163; G08F 1/166

See application file for complete search history.

(56) **References Cited**

U.S. PATENT DOCUMENTS

2,475,578 A *	7/1949	Halstead	.....	B61L 23/00 362/88
2,762,913 A *	9/1956	Jepson	.....	B61L 23/34 246/124
5,198,800 A *	3/1993	Tozawa	.....	E02F 9/2033 212/276

(Continued)

OTHER PUBLICATIONS

International Search Report and Written Opinion for PCT/US2016/023754, dated Aug. 8, 2016. (10 pages).

Primary Examiner — Jason C Smith

(74) *Attorney, Agent, or Firm* — McAndrews, Held & Malloy, Ltd.

(57) **ABSTRACT**

Systems and methods are provided for worker protection. The worker protection systems comprise a plurality of alert devices, comprising one or more wearable personal alert devices, each worn by a person (e.g., worker), and one or more companion alert devices that broadcast alerts or signals triggering alerts. The companion alert devices comprise vehicle-mounted alert devices, configured for operation on vehicles (e.g., trains), and wayside detection units, configured for placement on or near paths of the vehicles. The wayside detection units may be operable to autonomously detect and track the vehicles.

30 Claims, 6 Drawing Sheets

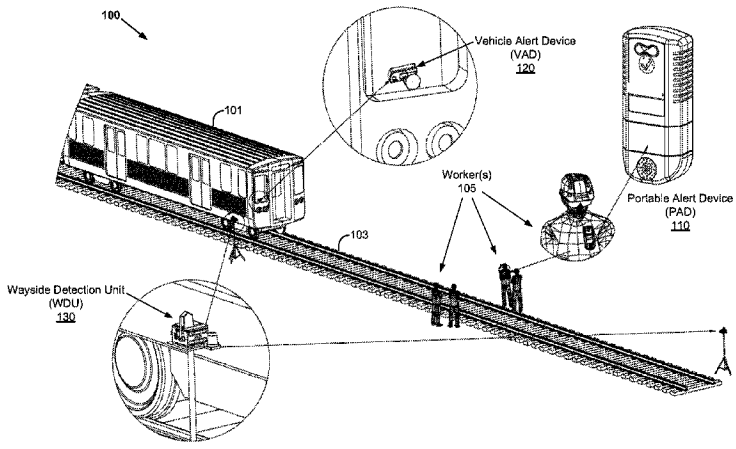

(56) **References Cited**

U.S. PATENT DOCUMENTS

5,554,982 A * 9/1996 Shirkey ..... B61L 3/004 246/122 R
5,620,155 A * 4/1997 Michalek B61L 29/24 246/121
5,652,570 A * 7/1997 Lepkofker A61B 5/1112 340/407.1
5,727,758 A * 3/1998 Penza B61L 23/06 246/124
5,924,651 A * 7/1999 Penza B61L 23/06 246/124
5,939,986 A * 8/1999 Schiffbauer B66C 15/045 299/12
6,113,037 A * 9/2000 Pace B61L 23/06 246/124
6,145,792 A * 11/2000 Penza ..... B61L 3/125 246/122 R
6,208,260 B1 * 3/2001 West B66C 15/06 340/5.1
6,232,887 B1 * 5/2001 Carson B61L 23/06 340/4.21
6,650,242 B2 * 11/2003 Clerk F16P 3/144 340/425.5
7,167,082 B2 * 1/2007 Stigall A41D 13/00 340/407.1
7,624,952 B1 * 12/2009 Bartek B61L 23/06 246/124
8,109,474 B2 * 2/2012 Bartek B61L 1/02 246/124
8,248,263 B2 * 8/2012 Shervey F16P 3/147 340/539.1
8,344,877 B2 1/2013 Sheardown et al.
8,786,428 B2 * 7/2014 Sheardown ..... B61L 23/06 246/122 R
8,952,805 B2 * 2/2015 Baines G08B 21/02 340/539.12
2010/0102954 A1 * 4/2010 Radivojevic G01S 11/06 340/539.11
2011/0006912 A1 * 1/2011 Sheardown B61L 23/06 340/901
2011/0152971 A1 * 6/2011 Nghiem A61N 1/37229 607/60
2012/0296562 A1 * 11/2012 Carlson B61L 15/0027 701/301
2013/0166114 A1 * 6/2013 Baines B61L 23/06 701/20
2014/0045547 A1 * 2/2014 Singamsetty G06F 1/1643 455/552.1
2016/0280240 A1 * 9/2016 Carlson G01S 19/17
2017/0282944 A1 * 10/2017 Carlson B61L 15/0027

* cited by examiner

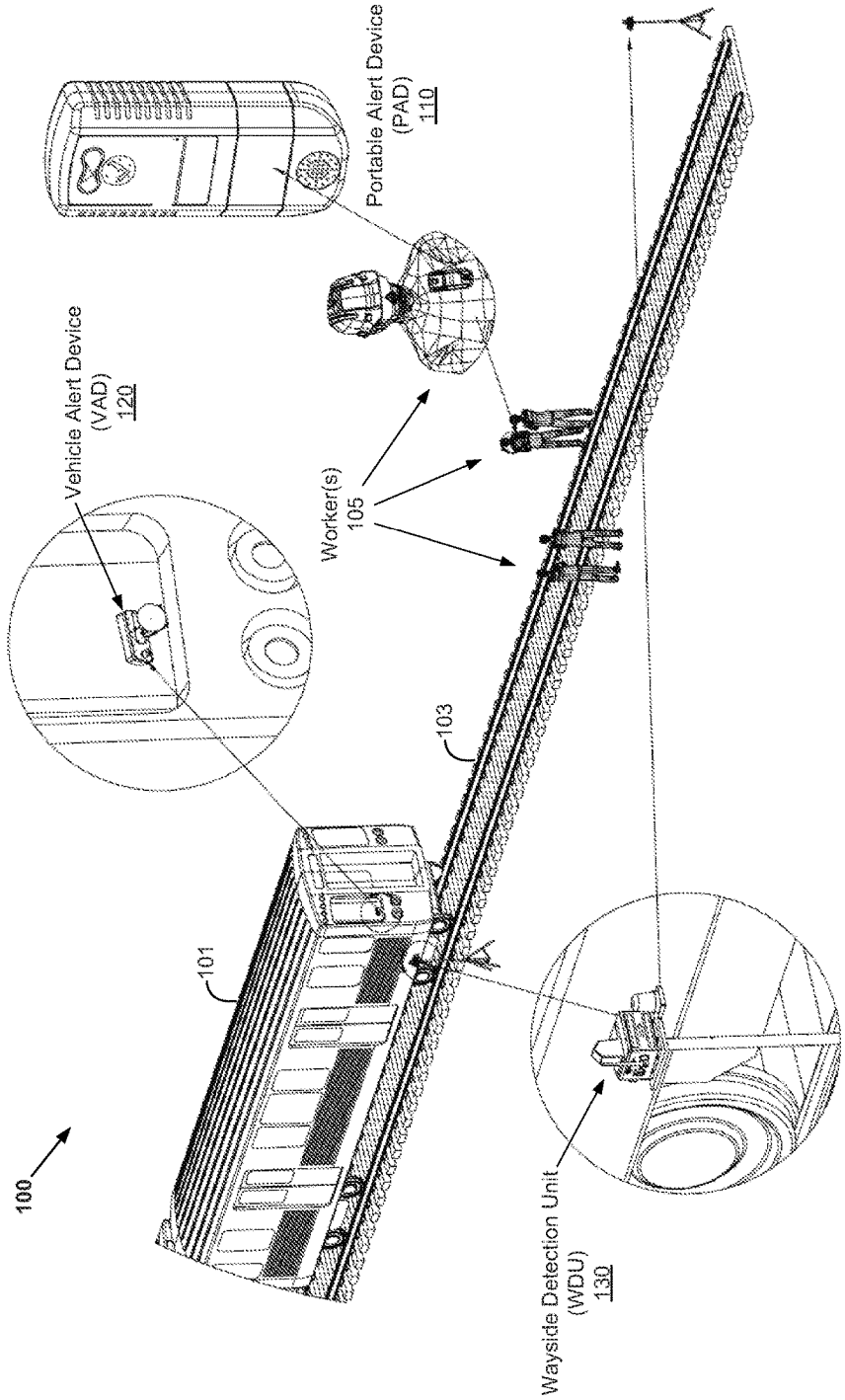
100
101
103
Vehicle Alert Device
(VAD)
120
Worker(s)
105
Portable Alert Device
(PAD)
110
Wayside Detection Unit
(WDU)
130

FIG. 1A

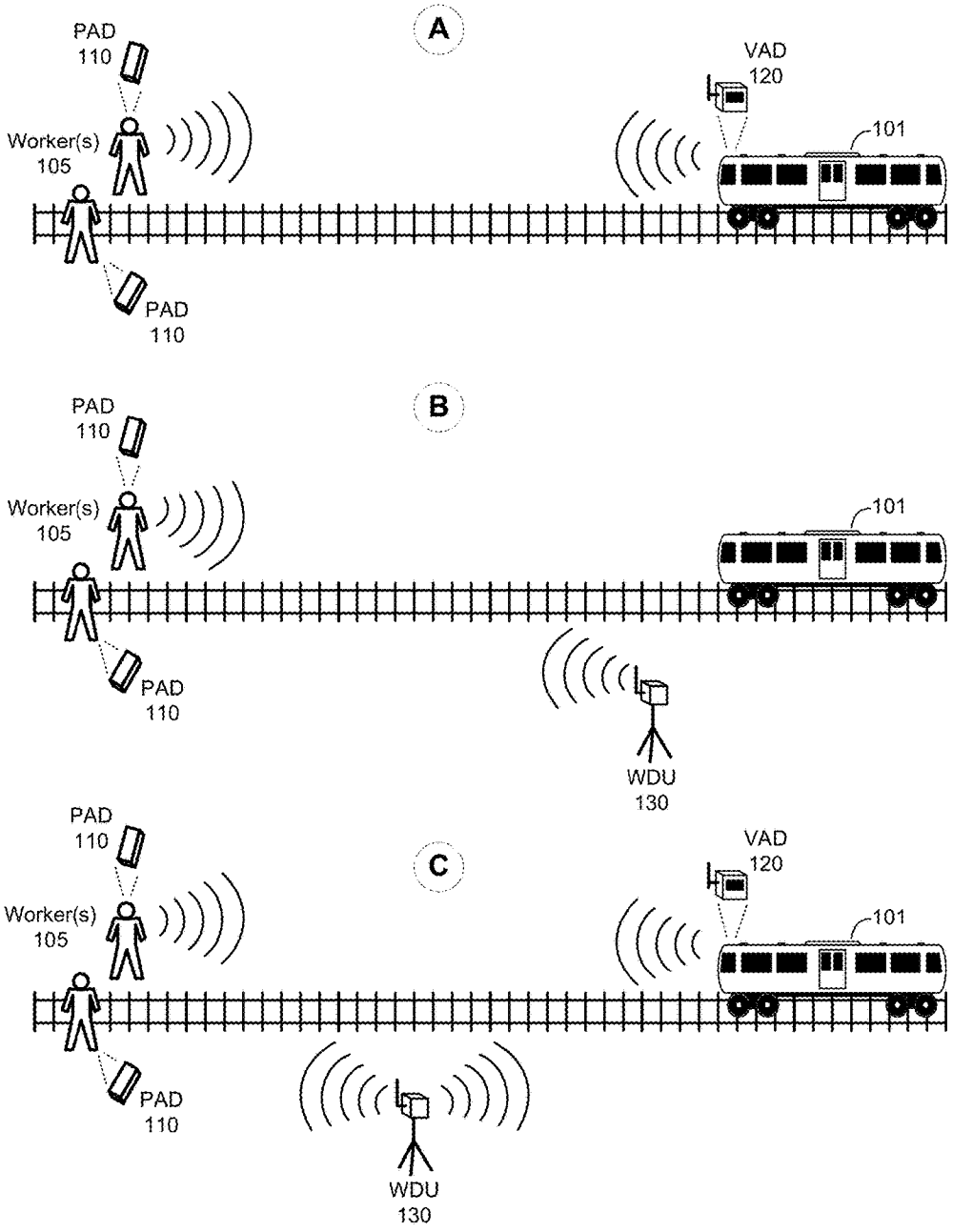
A
PAD
110
Worker(s)
105
VAD
120
101
PAD
110
B
PAD
110
Worker(s)
105
101
PAD
110
WDU
130
C
PAD
110
Worker(s)
105
VAD
120
101
PAD
110
WDU
130

FIG. 1B

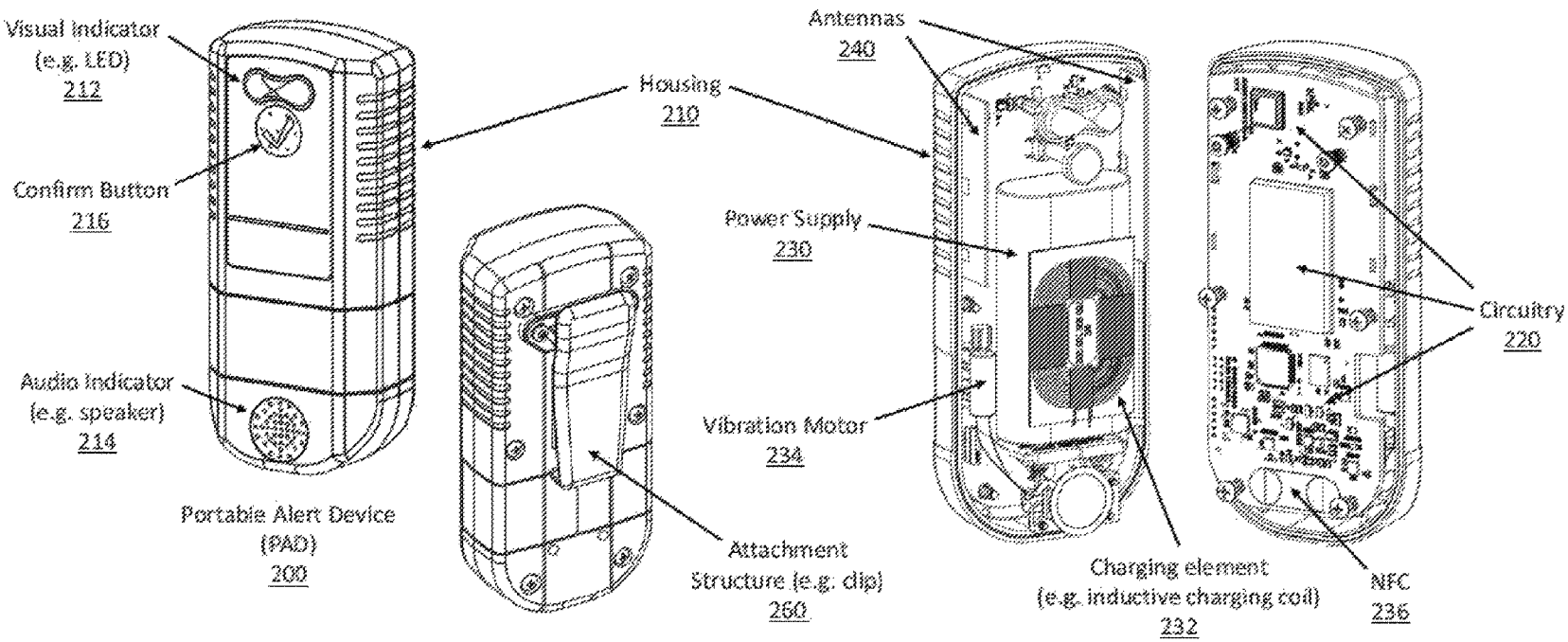
Visual Indicator
(e.g. LED)
212
Confirm Button
216
Audio Indicator
(e.g. speaker)
214
Portable Alert Device
(PAD)
200
Housing
210
Antennas
240
Power Supply
230
Vibration Motor
234
Attachment
Structure (e.g. clip)
260
Charging element
(e.g. inductive charging coil)
232
Circuitry
220
NFC
236

FIG. 2A

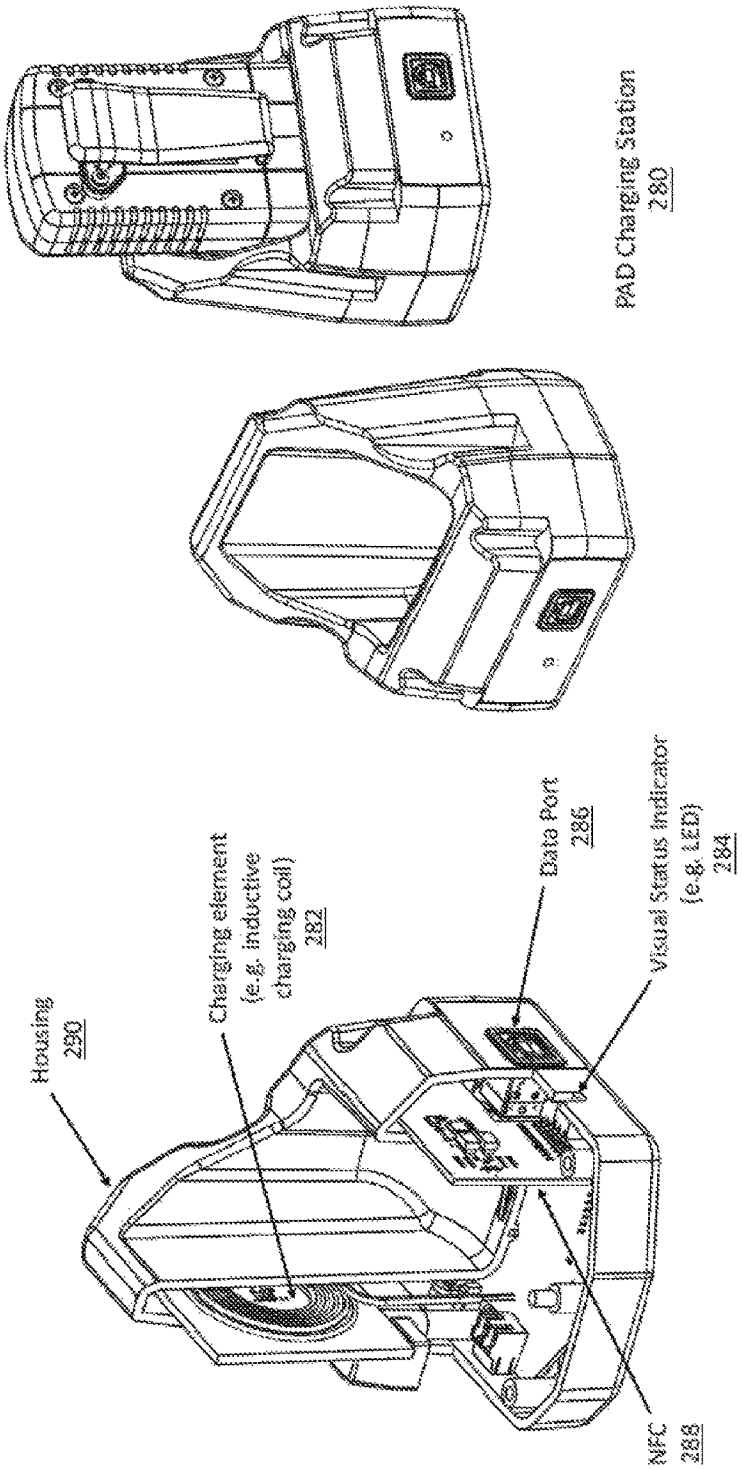
PAD Charging Station
280
Housing
290
Charging element
(e.g. inductive
charging coil)
282
Data Port
286
Visual Status Indicator
(e.g. LED)
284
NFC
288

FIG. 2B

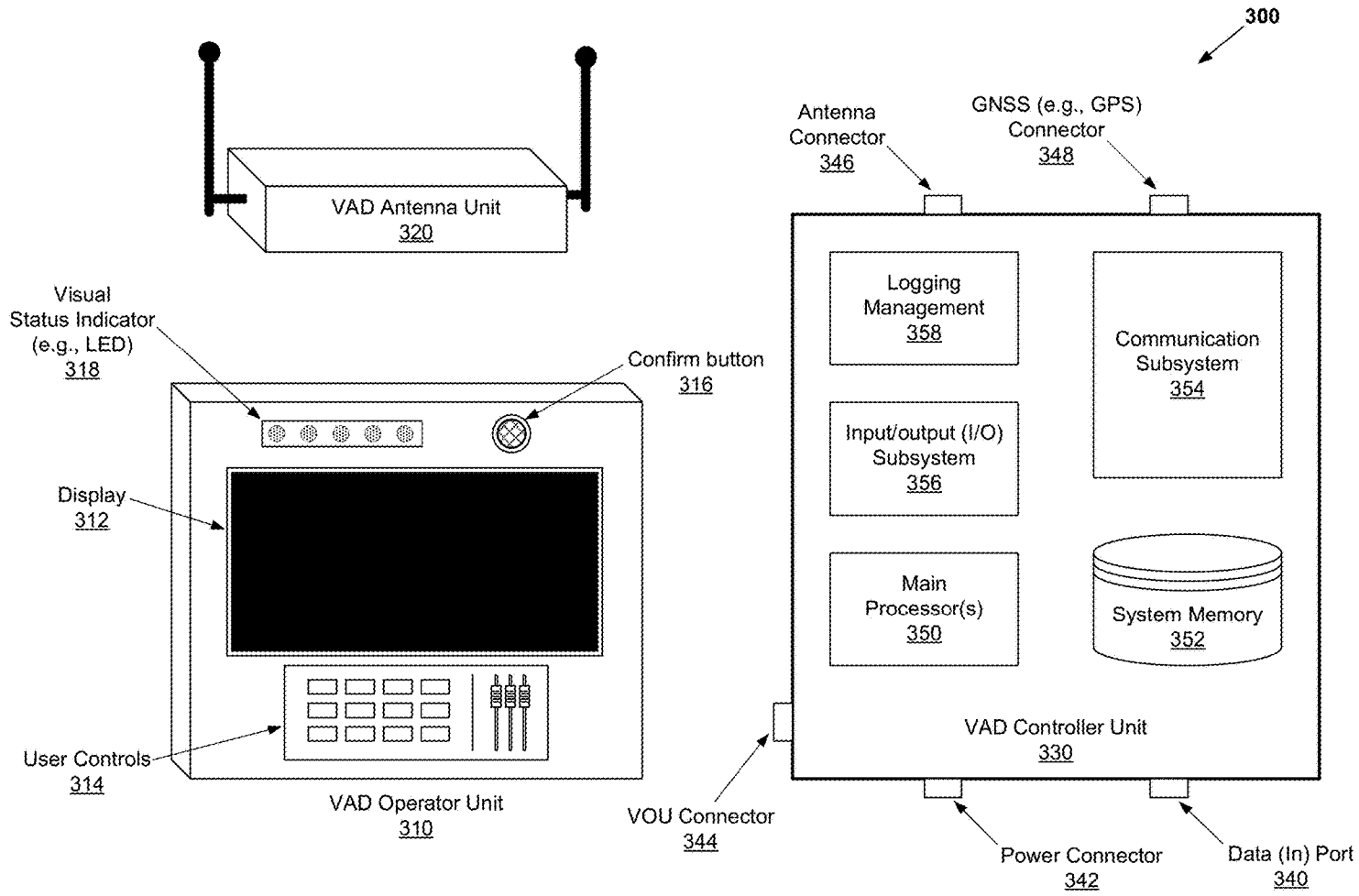
300
VAD Antenna Unit
320
Visual
Status Indicator
(e.g., LED)
318
Confirm button
316
Display
312
User Controls
314
VAD Operator Unit
310
VOU Connector
344
Antenna
Connector
346
GNSS (e.g., GPS)
Connector
348
Logging
Management
358
Communication
Subsystem
354
Input/output (I/O)
Subsystem
356
Main
Processor(s)
350
System Memory
352
VAD Controller Unit
330
Power Connector
342
Data (In) Port
340

FIG. 3

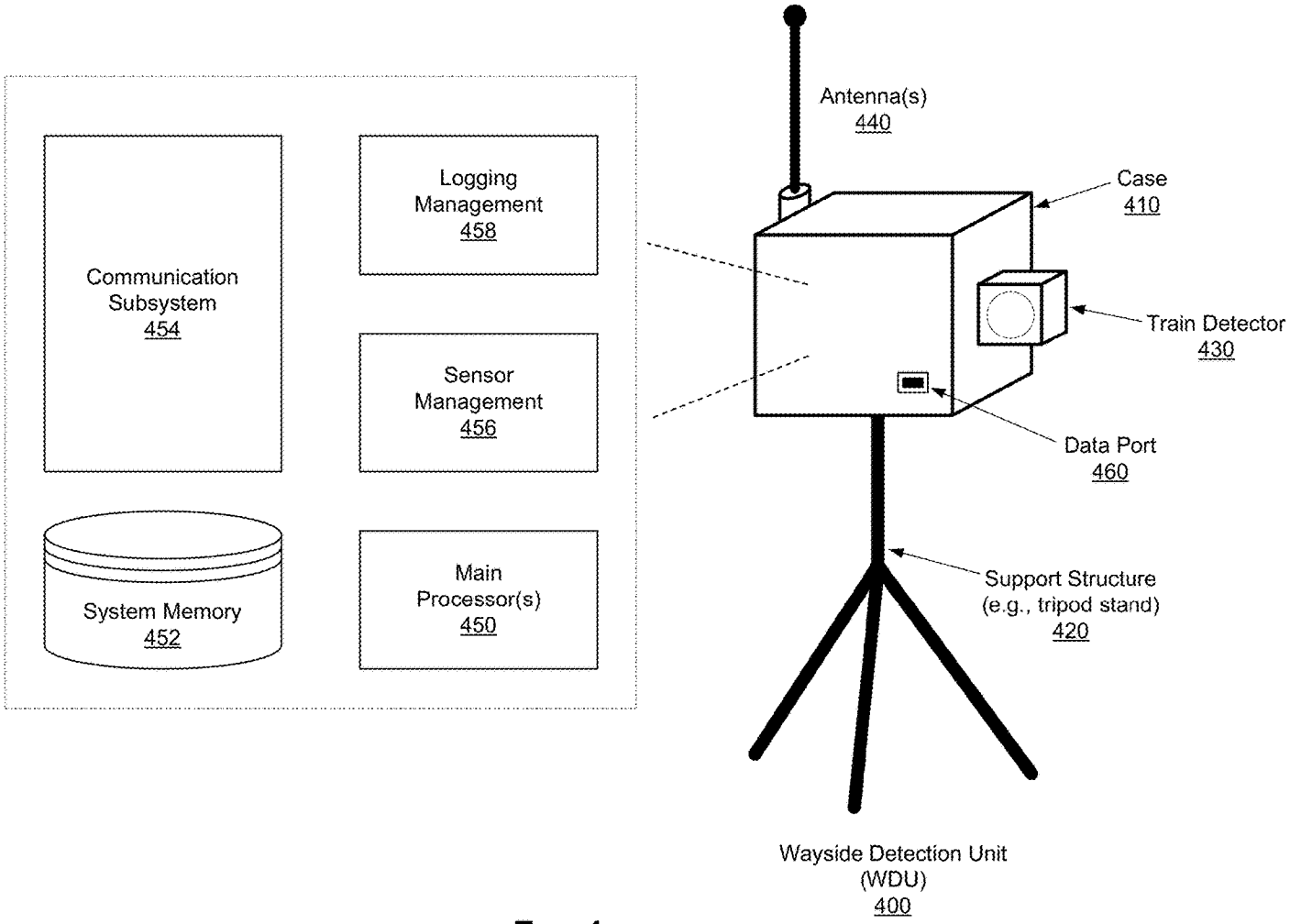
Communication Subsystem 454
Logging Management 458
Sensor Management 456
System Memory 452
Main Processor(s) 450
Antenna(s) 440
Case 410
Train Detector 430
Data Port 460
Support Structure (e.g., tripod stand) 420
Wayside Detection Unit (WDU) 400

FIG. 4

WORKER PROTECTION SYSTEM

CLAIM OF PRIORITY

This patent application makes reference to, claims priority to and claims benefit from U.S. Provisional Patent Application Ser. No. 62/177,683, filed Mar. 23, 2015. The above identified application is hereby incorporated herein by reference in its entirety.

TECHNICAL FIELD

Aspects of the present disclosure relate to safety solutions particularly in conjunction with railway systems. More specifically, various implementations of the present disclosure relate to methods and systems for worker protection.

BACKGROUND

Various issues may exist with conventional approaches for worker protection in conjunction with railway systems. In this regard, conventional systems and methods, if any existed, for worker protection in conjunction dangers posed by work on or near tracks, can be costly, inefficient, and/or ineffective. Further limitations and disadvantages of conventional and traditional approaches will become apparent to one of skill in the art, through comparison of such systems with some aspects of the present disclosure as set forth in the remainder of the present application with reference to the drawings.

BRIEF SUMMARY

System and methods are provided for enhanced worker protection, substantially as shown in and/or described in connection with at least one of the figures, as set forth more completely in the claims.

These and other advantages, aspects and novel features of the present disclosure, as well as details of an illustrated embodiment thereof, will be more fully understood from the following description and drawings.

BRIEF DESCRIPTION OF SEVERAL VIEWS OF THE DRAWINGS

FIG. **1**A illustrates an example work protection system, in accordance with the present disclosure.

FIG. **1**B illustrates example use scenarios of a work protection system, in accordance with the present disclosure.

FIG. **2**A illustrates an example portable alert device (PAD), in accordance with the present disclosure.

FIG. **2**B illustrates an example charging station for use in conjunction with portable alert devices (PADs), in accordance with the present disclosure.

FIG. **3** illustrates an example vehicle alert device (VAD), in accordance with the present disclosure.

FIG. **4** illustrates an example wayside detection unit (WDU), in accordance with the present disclosure.

DETAILED DESCRIPTION OF THE INVENTION

As utilized herein the terms "circuits" and "circuitry" refer to physical electronic components (e.g., hardware) and any software and/or firmware ("code") which may configure the hardware, be executed by the hardware, and or otherwise be associated with the hardware. As used herein, for

example, a particular processor and memory may comprise a first "circuit" when executing a first one or more lines of code and may comprise a second "circuit" when executing a second one or more lines of code. As utilized herein, "and/or" means any one or more of the items in the list joined by "and/or". As an example, "x and/or y" means any element of the three-element set {(x), (y), (x, y)}. In other words, "x and/or y" means "one or both of x and y." As another example, "x, y, and/or z" means any element of the seven-element set {(x), (y), (z), (x, y), (x, z), (y, z), (x, y, z)}. In other words, "x, y and/or z" means "one or more of x, y, and z." As utilized herein, the term "exemplary" means serving as a non-limiting example, instance, or illustration. As utilized herein, the terms "for example" and "e.g." set off lists of one or more non-limiting examples, instances, or illustrations. As utilized herein, circuitry is "operable" to perform a function whenever the circuitry comprises the necessary hardware and code (if any is necessary) to perform the function, regardless of whether performance of the function is disabled or not enabled (e.g., by a user-configurable setting, factory trim, etc.).

FIG. **1**A illustrates an example work protection system, in accordance with the present disclosure. Shown in FIG. **1**A is a worker protection system **100**, which may be used in providing and/or enhancing workers safety, particularly with regard to dangers posed by trains in railway work environments.

The worker protection system **100** is a proximity warning system operable to issue alerts (e.g., to railroad worker(s) **105**) when a particular vehicle (e.g., a train **101**) is approaching. In this regard, the worker protection system **100** comprises one or more devices or components, each comprising suitable hardware (including, e.g., circuitry), software, or any combination thereof configured for supporting worker protection related operations or functions.

For example, the worker protection system **100**, as shown in FIG. **1**A, comprises one or more wearable devices, referred to as portable alert devices (PADs) **110**, which are worn by worker(s) **105**. The PADs **110** communicate with one or more companion devices, which are configured to directly trigger (and transmit to the PADs **110**) alerts, or transmit signals causing issuing of alerts by the PADs **110**. The companion devices comprise vehicle-mounted companion devices, referred to as vehicle alert devices (VADs) **120**, mounted on vehicles (e.g., the train **101**) that may pose danger to the workers, and/or stand-alone devices that are placed in "wayside" manner—that along or near path of the approaching object (e.g., track **103** traversed by the train **101**), referred to wayside detection units (WDUs) **130**, which are portable devices placed by the workers **105** at the work site. The VAD **120** is configured to trigger alerts under particular conditions—e.g., when it detects it is approaching a crew equipped with the corresponding wearable devices (PADs **110**). The VAD **120** may also be configured to alert the vehicle operator—that workers are in proximity, and may provide additional information in this regard (e.g., display the number of detected workers, indicate distance to workers, indicate whether workers have confirmed the alarm, etc.). Similarly, the WDU **130** is configured to trigger alerts under particular conditions, such as when it detects the approaching vehicle (the train **101**). In this regard, the WDU **130** may be used when no VADs **120** are being used, or even when VADs **120** are utilized, such as to provide redundant warning capabilities with additional range.

The PAD **110** may be designed and configured as small and light device, with low profile so as not to impede normal working activities of the worker(s) **105** wearing it. For

example, the PAD **110** may be worn by either a clip, arm band or belt clip. The PAD **110** is operable to issue an indication (e.g., audio, visual, tactile, etc.) to alert the worker wearing it of an approaching object (that pose a safety concern). For example, the PAD **110** may comprise audio warning component (e.g., a speaker), a visual warning component (e.g., a multi-color LED indicator), tactile indicator component (e.g., vibration), etc. Further, the PAD **110** may be operable to enable the user to provide feedback in response to issued alarm indication. For example, the PAD **110** may comprise an alert acknowledgement element, such as a confirmation button to silence alarms (i.e., a "mute" or "confirm" switch). To improve and optimize wearability of the PAD **110**, its housing may be designed to include various features to support multiple mounting locations and/or approaches (e.g., clipped on the user's clothing/equipment, around the user's wrist, etc.). The PAD **110** may be configurable to provide alerts adaptively based on particular pre-set conditions—e.g., to provide at least a 15 second warning in line of sight conditions, when a train is approaching at 60 mph.

The VAD **120** may be configured either as a portable device (e.g., brought into and that may be mounted to vehicles only when needed), or as permanently mounted or integrated component (of vehicles). Implementing the VAD **120**, which typically is the most costly component of the system, as a detachable device may be desirable as it allows use of small number of the VADs **120**, being only moved into and used on vehicles being operated, thus reducing the deployment cost significantly. The VAD **120** may be operable to broadcast signals that are specifically configured to interfaces with the wearable devices (PADs **110**) and may also interface with the wayside unit (WDU **130**) to provide increased distance. Further, in some instances the VAD **120** may be operable to, when worker(s) is/are detected, provide indication to the operator(s) of the vehicle, such as by displaying and/or sounding warnings. In some instances, the VAD **120** may provide detailed information (rather than generic warning), such as indicating the quantity of workers detected, and the approximate distance to the workers.

While the VAD **120** is illustrated in FIGS. **1**A and **1**B as a singular physical component, incorporating all components (including antennas), the disclosure is not so limited, and in some instances VADS may be implemented to support distributed arrangements—e.g., comprising a plurality of physical units, which may be placed at different locations or positions within the vehicles. For example, VADs may comprise a first physical unit comprising the antennas (and related circuitry or other support components), and one or more other physical units housing the remaining components of the VADs. In this regard, the physical antenna unit may be configured for optimal placement (e.g., on roof of front car in train) which may be deemed optimal based on one or more placement criteria (e.g., optimal broadcast characteristics, maximum safety to operators and other individuals on train, such as passengers, etc.).

The WDU **130** is configured to operate as stand-alone device, placed on or near the path of the object(s) being detected. For example, the WDU **130** may be attached to placement component (e.g., a tripod), and is temporarily placed near the track **103**. The placement of the WDU **130** may be subject to particular criteria—e.g., no closer than certain distance (for example, four feet) to the nearest rail, at or in advance of each end of a work zone. The WDU **130** broadcasts a signal when a train or vehicle passes. The WDU **130** may have dual functionality as it may interface with the VAD while also broadcasting signals to PADs. The WDU **130** may be utilized in areas where trains or other vehicles may not have vehicle mounted companion devices (e.g., VADs **120**). Nonetheless, the disclosure is not so limited, and in some instances all three types of devices may work together, as described below.

In certain implementations, worker protection systems in accordance with the present disclosure, such as the worker protection system **100**, may incorporate various solutions for providing worker alerts (particularly, e.g., for railway work environments) in enhanced and adaptive manner. For example, worker protection system **100** may be configured to trigger alerts based on speed, at least in part, rather than simply based on distance between workers and approaching trains. In this regard, the worker protection system **100** may be configured to utilize the approach speed to appropriately time to the alert so that the alerts are not triggered too late, but also are not triggered too early causing the workers **105** to start ignoring and suppressing alerts (e.g., on very slow moving or stationary vehicles), until the vehicle is actually a potential threat. Thus, the distance at which the alerts are triggered may be based on the speed of the vehicles. For example, for trains approaching at speeds under 4 mph, no alerts are triggered until the train is within 100 feet, whereas for a train approaching at 30 mph the alerts are triggered when the train is with 1000 feet. In this regard, the conditions at which the alerts are triggered (e.g., speed, distances, or combinations thereof) may be configurable.

Various aspects of the alert related operations (triggering criteria) and/or associated functions (e.g., logging) may be location-dependent. As such, worker protection systems in accordance with the present disclose (e.g., the worker protection system **100**) may support use of positioning solutions (e.g., Global Navigation Satellite System (GNSS) technologies, such as GPS, GLONASS, Galileo, etc.), to enable obtaining location/positioning information that may be used in alert related operations or functions. This may be done by incorporating into the various devices (e.g., the PADs **110**, the VADs **120**, and the WDUs **130**) dedicated GNSS resources (e.g., receivers, antennas, etc.) and/or by configuring them to use existing GNSS resources where possible (e.g., use of existing positioning application in the train **101** by the VAD **120**).

The alerts may be triggered only when a preset (programmed) alert trigger threshold is satisfied (e.g., vehicle's speed exceeding particular limit, distance to workers falling below particular value, etc.). In certain implementation, multiple threshold types may be used. For example, in one example implementation, three alert threshold types may be used: time-to-arrival (TTA), distance-from-train (DFT), and low-speed close proximity distance alert (CPD). These different types of thresholds may be applicable at different conditions. For example, at low speeds, below a configurable speed threshold, the workers will not get TTA or DFT alerts; rather, the alert triggering is held off until the train/vehicle comes within a programmed short distance. This may avoid triggering DFT alert prematurely (time-wise), when it still might be a long time (e.g., minutes) until the train arrives due to its low speed.

In certain implementations, worker protection systems in accordance with the present disclosure, such as the worker protection system **100**, may support location-specific rule customization. For example, an operator (e.g., a transit agency) may desire modified alerting rules at particular areas/locations (e.g., due to unique geography, or greater difficulty in seeking safe shelter, etc.). Thus, alert devices that are intended for use in such areas/locations may be

reconfigured dynamically. This may be done by use of (re-)customization stations at entry points to those areas/locations, to reconfigure the alert devices dynamically. This may be done using near field communication rule modification. The alert units may be placed in proximity to the customization stations briefly, and the rules are then updated. Further, indications (e.g., visual, audible, etc.) of successful (or failed) rule changes may be provided. In some instances, the special/customized rules may be configured to expire, such as after a certain period of time, after next power down or charging cycle, etc.

In certain implementations, worker protection systems in accordance with the present disclosure, such as the worker protection system **100**, may be configured to provide alerts for both the vehicle operator as well as all workers. The worker protection system **100** may be configurable based on user preferences and/or parameters. For example, the worker protection system **100** may be configured to operate (trigger alerts) within operator-configurable combinations of distances, speeds, location, etc. Further, the PADs **110** may be customized to operate according to individual organizations' rules and regulations.

In certain implementations, worker protection systems in accordance with the present disclosure, such as the worker protection system **100**, may be operable to allow assignment and/or unique identification of vehicle-mounted units (i.e., VADs **120**), such that the wearable units (PADs **110**), as well as the wayside units (WDUs **130**) would only respond to alerts corresponding to particular tracks. In other words, each VAD **120** would be identified uniquely, and assigned to a particular track, to enable only PADs **110** and/or WDUs **130** used by workers on that particular track to respond to alerts triggered by that VAD **120**, while ignoring other VADs **120** (thus avoiding false alerts).

In certain implementations, worker protection systems in accordance with the present disclosure, such as the worker protection system **100**, may be configured to provide optimized power performance (e.g., power supply, power consumption, etc.). In this regard, the power supply may be adaptively selected and/or configured for each of different devices in the worker protection system **100**, based on the type and/or working conditions for the device. For example, the PAD **110** may be powered using integrated power supply (e.g., batteries or similar power sources). In this regard, rechargeable batteries may be used, allowing the recharging of the device when not in use (e.g., being inserted or docked into charging stations at the end of each day to be charged for work the following day. The VAD **120** may be powered by the vehicle to which it is mounted or integrated. The WDU **130** may be powered using integrated power supply (e.g., batteries or similar power sources), which may be rechargeable.

Further, certain solutions may be incorporated and/or used to enhance overall power consumption. For example, the PAD **110** may be configured to support one or more power-saving modes (e.g., modes with the PAD **110**, or at least some of the components thereof, transitioning to low functionality states, or completely shutting down). The PAD **110** may be operable to facilitate transitioning back to full functionality (or powering up) when necessary. For example, the PAD **110** may be configured to automatically shut down when it is not being used (e.g., when placed in a charger or docking bay for recharging). Further, the PAD **110** may be operable to dynamically determine when to transition to (or from) power saving modes. For example, the PAD **110** may comprise a component (e.g., accelerometer) for determining when the device is idle for an extended period of time, and respond to that by entering power saving mode (e.g., shut down, or operate with less frequent polling). Such accelerometer detects the lack of motion for a period of time to enter the power-saving mode; then trigger return to normal operating mode when movement is detected.

In certain implementations, worker protection systems in accordance with the present disclosure, such as the worker protection system **100**, may be configured to provide logging and data recording. The logging and data recording may be used, for example, for training, for location tracking, and/or for even recreating (e.g., during accident investigation). For example, the PAD **110** may comprise circuitry for data recording and/or logging—e.g., to compile downloadable log files, which may be accessible (remotely, such as via any available communication means, or by direct connection to the PAD **110**, such as when the device is docked for recharging). Such log files are then available to allow examination of alerts as well as related events and/or activities (e.g., users' responses, such as alert silencing actions). The VADs **120** and/or the WDUs **130** may similarly be configured to support logging of worker protection/alert related information, such as by also compiling downloadable log files that are available when needed. The log files may contain data recording triggered alerts and related information (e.g., alerts' times and/or location, distances to workers and traveling speed within work zone workers' acknowledgment or response actions, etc.), as well as other information relating to, e.g., faults, mechanical shock over thresholds, etc. Further, logs may include GPS positioning information (e.g., coordinate of locations of alerts), time of events, compass bearing, received signal strength, and antenna used, when available.

In certain implementations, worker protection systems in accordance with the present disclosure, such as the worker protection system **100**, may be incorporate various communication techniques for optimizing performance, with respect to the broadcast, reception, and processing of signals used in triggering alerts. For example, the PAD **110** may incorporate diversity antennas of identical or differing polarity, to improve signal reception reliability. Use of such diversity antennas (with corresponding signal processing functions) allows for improved performance in certain conditions, such as when the worker **105** is not in the optimal position of antenna orientation.

In certain implementations, worker protection systems in accordance with the present disclosure, such as the worker protection system **100**, may be configured to provide backward compatibility with existing protection solutions and/or protocols. Further, it may be particularly designed and implemented such that it may be integrated into future communications based train control systems.

In certain implementations, multiple devices in worker protection systems in accordance with the present disclosure, such as the worker protection system **100**, may be configured to operate collaboratively, to ensure that alerts are received by all workers. For example, the PADs **110** and/or the WDUs **130** may be configured to relay alerts (e.g., of approaching trains) to other devices nearby, thus improving the field strength of warning signals, by increasing the probability that all nearby PADs **110** receive the alert (even devices that may have not been able to receive the signals/alerts directly).

The various devices (PADs, VADs, WDUs) used in the worker protection systems may be designed and/or implemented to meet certain operational requirements (relating to, e.g., shock/vibration, temperature/humidity, salt conditions, icing, hose down, electrostatic discharge (ESD), electromag-

netic compatibility (EMC), electromagnetic interference (EMI), electromagnetic compatibility, etc.) in accordance with particular standards that may be pertinent to the related industries (MIL-STD-810, AREMA 11.5.1, IEC 61000-4, SAE J1113, CISPR 22, FCC Title 47, Association of American Railroads (AAR) All Applicable AAR S-9401, etc.).

Accordingly, worker protection systems in accordance with the present disclosure, such as the worker protection system **100**, with many of the components being portable and/or configurable, offer portability and ease of configuration, allowing them to be set up in any work environment seamlessly.

FIG. **1**B illustrates example use scenarios of a work protection system (e.g., the work protection system **100** of FIG. **1**A), in accordance with the present disclosure. In this regard, the different use scenarios may be based on which of and how the different devices in the work protection system **100**—that is the PADs **110**, the VADs **120**, and the WDUs **130**—interact during operation of the system, to provide the intended protection.

For example, in a first use scenario (denoted as 'A' in FIG. **1**B), only worker wearable devices (PADs **110**) and vehicle-mounted devices (VADs **120**) are used—i.e., no wayside devices (WDUs **130**) are used. In other words, as shown in FIG. **1**B, the train **101** is equipped with a VAD **120**, which broadcasts signals to interface with the PADs **120** worn by worker(s) **105**, to detect if the train **101** is in proximity where an alarm is activated. In this regard, the PADs **120** will issue an alert (e.g., audible alarm) once they are detected by any train-based VAD **120**, such as within a specified distance. On the vehicle side, the VAD **120** may further provide information to the operator when the PADs **120** are detected. For example, a user interface may indicate such information as how many PADs **120** (and thus worker(s) **105**) are present within the specified distance. Further, the workers and/or operators may respond to issued alarms—e.g., silencing them, such as by acknowledging them on the wearable devices and/or on the user interface of the vehicle mounted devices.

In a second use scenario (denoted as 'B' in FIG. **1**B), no vehicle-mounted devices (VADs **120**) are used; rather, the worker wearable devices (PADs **110**) are only in communication with the wayside devices (WDUs **130**). In this regard, the wayside devices monitor for and detect approaching vehicles (e.g., the train **101**), broadcast alarms (or signals triggering alarms) when a vehicle is in proximity (e.g., determined when at particular distance from the wayside device and/or moving at particular speed). For example, when the train **101** is detected by the WDU **130** (e.g., when it passes it, or moves within certain distance from it, at particular speed), it sends a proximity warning to all local PADs **110**. Once the alarms is triggered at the wearable devices, they may continue until acknowledged by the workers—e.g., audible alarms continue until silenced, such as by hitting a "confirm" button.

In a third use scenario (denoted as 'C' in FIG. **1**B), all three types of devices—that is worker wearable devices (PADs **110**), vehicle-mounted devices (VADs **120**) and wayside devices (WDUs **130**)—are used, and may communicate with one another to provide the desired protection. In such scenarios, a worker wearable device may be activated and/or triggered by vehicle-mounted devices as well as wayside devices, for redundancy (thus enhanced protection). For example, the train **101** may be equipped with the VAD **120**, which may communicate directly with the WDU **120** as the train **101** approaches it, such as when the train **101** is at a specified distance. In response, the WDU **130** may send proximity warnings (trigger alarms) to all local PADs **110**. Under certain conditions (e.g., at particular distance and/or speed), the VAD **120** may communicate directly with the local PADs **110**, to trigger alarm (which may be configured differently, such as for heightened risk).

FIG. **2**A illustrates an example portable alert device (PAD), in accordance with the present disclosure. Shown in FIG. **2**A is a portable alert device (PAD) **200**.

The PAD **200** may comprise suitable one or more of hardware (including circuitry and/or other hardware components), software, and combination thereof for implementing various aspects of the present disclosure, particularly with respect to the support of portable wearable functionality in worker protection solutions, as described above. The PAD **200** may be a particular example implementation of the PAD **110**, as described with respect to FIGS. **1**A and **1**B. In this regard, as noted above PADs may be configured as portable devices that are wearable by users (e.g., workers) to provide alerts regarding approaching vehicles that may pose safety threats to workers at particular locations. The PAD **200** is operable to perform such functions, in support of work protection systems in accordance with the present disclosure, as receiving alerts (or triggering alerts in response to broadcast warning signals) and providing alert indications to the user (the worker wearing the device), as well as additional alert related functions, such logging alert related data, etc.

In the example implementation illustrated in FIG. **2**A, the PAD **200** may comprise a housing **210** for enclosing various components of the PAD **200**. The housing **210** may be constructed to be suitable for the intended operations (and environment and/or conditions thereof) of the PAD **200** (e.g., strong enough to withstand harsh work environment but light enough as to not encumber the worker or hinder his/her activities), and to withstand environmental conditions associated with outside/external use (e.g., rain, extreme cold/heat), etc.).

The PAD **200** may comprise (or may be integrated with) an attachment structure **260**, for facilitating the wearability of the PAD **200**, by enabling the PAD **200** to be attached to the worker and/or to item used by the worker (e.g., clothing, equipment, etc.). In this regard, the PAD **200** may support various types of attachment structures, to allow worker to select preferable way for apply the device. For example, as shown in FIG. **2**A, the PAD **200** may comprise or be coupled to a clip structure **260**, so that the PAD **200** may be clipped onto the worker's clothing, belt, etc. In another implementation (not shown), the PAD **200** may comprise or be coupled to a strap structure, so that the PAD **200** may be attached around the worker's wrist.

The PAD **200** has one or more antennas **240**, which may be integrated or enclosed within the housing **210**, configured for transmitting and/or receiving signals (e.g., broadcast alert related signals). As noted above, PADs may support use of various optimization techniques, including use of diversity, and as such the antennas **240** may comprise diversity antennas of identical or differing polarity.

The PAD **200** may have an integrated/internal power supply **230**, for powering the various components of the PAD **200**. In this regard, the power supply **230** may be rechargeable. For example, charging stations (an example of which is described with respect to FIG. **2**B) may be used. The recharging of the power supply **230** may be done in various ways, including by use of charging stations (an example of which is described with respect to FIG. **2**B) for example. In this regard, the PAD **200** may be connected

(e.g., coupled, inserted, docked, etc.) to the charging station when it is not being used (e.g., at the end of each day) to be charged.

The PAD **200** may comprise suitable circuitry **220** for performing various operations in support of its functions. For example, the circuitry **220** may be operable to store data (including code); run and/or execute various applications and/or functions (alert related); handle transmission and/or reception of signals (and processing transmitted and/or received signals); provide power management; manage logging operations in the PAD **200**; and handle input/output functions (e.g., supporting different forms of alert indications, including visual, audio, and/or tactile, and handling user input, such as acknowledges of alerts).

As shown in FIG. **2**A, the PAD **200** comprises a visual indicator (e.g., LED) **212** and an audio indicator (e.g., speaker) **214**, which are integrated into the housing **210**, and are configured to provide visual and/or audio indication in response to triggering of alerts. Also, within the housing **210**, the PAD **200** comprises a vibration motor **234**, which may be configured to cause vibrations in response to triggering of alerts. The PAD **200** may be configured to use one or more of available indications means—e.g., one or more of visual, audio, and tactile indications. This may be done based on pre-set criteria, user selected preferences, dynamic configuration of the device, etc.

Further, as shown in FIG. **2**A, the PAD **200** comprises a confirmation button **216**, which is configured to receive indication of user acknowledgment (e.g., by pressing the confirmation button **216**), when alert indication(s) is/are outputted. In some instances, the PAD **200** may, in response to receiving user confirmations, generate and transmit acknowledge messages, to other alert devices (e.g., PADs, WDUs, and/or VADs broadcasting and/or forwarding signals triggering alerts that were confirmed).

In some example implementations, PADs in accordance with the present disclosure (such as, e.g., the PAD **200**) may not have any openings for connectors or the like (for enhanced rigidity and/or protection against the elements). The functions of the PADs may be configured to account for and/or accommodate such design.

For example, only wireless communications are used such as using near field communications (NFC), for communication of data, and charging of the power supply is performed indirectly, such as using magnetic induction. Thus, as shown in FIG. **2**A, the PAD **200** comprises a NFC component **236** for supporting NFC transmission and/or reception. Further, the PAD **200** comprises a charging element **232**, for enabling (re)charging the power supply **230** in connectless manner—e.g., without requiring plugging a power cord or other wired cabling. The charging element **232** may comprise an inductive charging coil, for example. The PAD may also include an environmentally sealed button to allow the operator to perform alarm confirmation and silencing.

FIG. **2**B illustrates an example charging station for use in conjunction with portable alert devices (PADs), in accordance with the present disclosure. Shown in FIG. **2**B is a PAD charging station **280**, which may be used in conjunction with portable alert devices (PADs), such as the PAD **200** of FIG. **2**A.

The PAD charging station **280** may comprise suitable one or more of hardware (including circuitry and/or other hardware components), software, and combination thereof for implementing various aspects of the present disclosure, particularly with respect to the support of portable alert devices (PADs). In this regard, the main function of the PAD charging station **280** may be (re)charging PADs (e.g., the PAD **200** of FIG. **2**A). The PAD charging station **280** may support additional functions, however. For example, the PAD charging station **280** may support and/or facilitate exchange of data with the PADs, such as to enable extraction of data from the PADs (e.g., log files) and/or input of data into the PAD (e.g., (re)configuration data), etc.

As shown in the example implementation illustrated in FIG. **2**B, the PAD charging station **280** may comprise a housing **290** for enclosing various components of the PAD **200**. The housing **290** may be constructed to be suitable for intended uses and/or functions of the PAD charging station **280**. For example, the housing **290** may be configured such that it defines a space into which the supported PADs (e.g., the PAD **200** of FIG. **2**A) may be inserted and/or docked.

The PAD charging station **280** may comprise various components for supporting and/or enabling charging power supplies of supported PADs. In this regard, the PAD charging station **280** (and charging related components thereof) may be configured to facilitate the charging in the manner required by the supported PADs. For example, in the example implementation illustrated in FIG. **2**B, the PAD charging station **280** comprises a charging element **282** integrated within the housing **290**, and configured for supporting recharging in connectless manner. The charging element **282** may comprise an indicative charging coil, for example, for enabling (re)charging by induction.

The PAD charging station **280** may comprise a data port **286** for extracting data from and/or inputting data into the PADs, while docked into the PAD charging station **280**. Further, the PAD charging station **280** may comprise suitable communication circuitry for facilitating the actual exchange of data with the docked PADs. For example, the data exchanges may be done via near field communication (NFC) connections, and as such the PAD charging station **280** may comprise an NFC component **288** for supporting such communications.

In some instances, the PAD charging station **280** may comprise input and/or output (I/O) component for use in conjunction with operations of the PAD charging station **280**. For example, the PAD charging station **280** may comprise a visual status indictor (e.g., LED) **284**, integrated within the housing **290**, to provide useful feedback (e.g., indication when charging, data extraction, data input, etc. is complete).

FIG. **3** illustrates an example Vehicle Alert Device (VAD), in accordance with the present disclosure. Shown in FIG. **3** is a vehicle alert device (VAD) **300**.

The VAD **300** may comprise suitable one or more of hardware (including circuitry and/or other hardware components), software, and combination thereof for implementing various aspects of the present disclosure, particularly with respect to the vehicle-mounted functionality in support of worker protection. The VAD **300** may be a particular example implementation of the VAD **120**, as described with respect to FIGS. **1**A and **1**B. In this regard, as noted above VADs may be configured as portable (movable) devices or as permanent components integrated into vehicles. The VAD **300** is operable to perform such functions, in support of work protection systems in accordance with the present disclosure, as broadcasting signals configured for interfacing with wearable devices (e.g., PADs **100**), as well as additional alert related functions, such alert-related interactions with vehicle operators (e.g., to indicate when worker(s) is/are detected, for example by sounding a warning and/or providing a visual indicators, and/or displaying related infor-

mation, such as the quantity of workers detected, and the approximate distance to the workers), logging alert related data, etc.

While VADs may be implemented as singular devices (that is within a single housing incorporating and/or attaching all components of the VAD), in some implementations, such as the example implementation illustrated in FIG. **3**, VADs may be implemented in a distributed manner—e.g., comprising a plurality of physical units, each of which may be placed at particular location and/or position, selected for optimal performance with respect to functions and/or operations provided by that unit. For example, as shown in FIG. **3**, the VAD **300** may comprise a VAD operator unit **310**, a VAD antenna unit **320**, and a VAD (main) controller unit **330**.

The VAD operator unit **310** may comprise components for supporting interactions with the vehicle operator—e.g., to received user input and/or provide user feedback relating to operation of the VAD **300** and/or to alerts. For example, the VAD operator unit **310** may comprises input/output (I/O) components (and related circuitry and/or support hardware), such as a display **312** and user controls **314**, to enable user interactions. Further, the VAD operator unit **310** may comprise and/or be operable to utilize I/O components configured for providing indications relating to triggering of alerts and/or receiving feedback (e.g., confirmation) relating to such indications. For example, the VAD operator unit **310** may comprise a speaker (not shown), configured for providing audible indications of triggered alerts, a visual status indicator (e.g., LED) **318**, configured for providing visual indication of triggered alerts, and a configuration button **316**, configured to receive indication of user acknowledgment (e.g., by pressing the confirmation button **316**), when alert indication(s) is/are outputted. The user controls **314** may comprise various types of user input elements, such as buttons, dials, etc. for allowing vehicle operator(s) or device users to provide input, such as to configure the VAD **300** and/or its operations, to respond to alerts (when triggered), etc. The user controls **314** may be implemented in the form of a touch screen (e.g., as part of the display **312**), or be implemented with an alpha-numeric display. The display **312** (or any type of user interface) may be used to provide the vehicle operator with various information, such as alert related data (e.g., indicate the quantity of workers detected, and the approximate distance to the workers, calculated time till reaching the workers, etc.).

In some instances, rather than incorporating dedicated I/O components, the VAD **300** (or the VAD operator unit **310**) may be operable to connect to and use existing I/O components (e.g., displays, speakers, etc.) in the vehicle, thus obviating the need to (and cost of) incorporating such dedicated components. For example, the VAD operator unit **310** may be operable to utilize existing audio systems to provide audible indication of triggered alerts.

The VAD antenna unit **320** may comprise one or more antennas **340** (and related circuitry and/or support hardware), configured for use in transmitting and/or receiving signals (e.g., broadcast alert related signals, receiving signal indicating triggering of alerts and/or confirmation of such alerts by workers, etc.). In some implementations, however, the VAD antenna unit **320** may not incorporate dedicated antennas, and may instead simply comprise connecting means (e.g., coaxial connectors for wiring) to existing and/or external antennas in the vehicle.

The VAD controller unit **330** may comprise suitable circuitry for performing (remaining) operations and/or functions of the VAD **300**. The VAD controller unit **330** may comprise, for example, one or more main processors **350**, a system memory **352**, a communication subsystem **354**, an input/output (I/O) subsystem **356**, and a logging management component **358**.

Each main processor **350** may comprise suitable circuitry operable to process data, and/or control and/or manage operations of the VAD **300**, and/or tasks and/or applications performed therein. In this regard, the main processor **350** may configure and/or control operations of various components and/or subsystems of the VAD **300**, by utilizing, for example, one or more control signals. The main processor **350** may comprise a general purpose processor (e.g., CPU), a special purpose processor (e.g., application-specific integrated circuit (ASIC)), or the like. The disclosure, however, is not limited to any particular type of processors. The main processor **350** may enable running and/or execution of applications, programs and/or code, which may be stored, for example, in the system memory **352**. Alternatively, one or more dedicated application processors may be utilized for running and/or executing applications (or programs) in the VAD **300**.

The system memory **352** may comprise suitable circuitry for permanent and/or non-permanent storage, buffering, and/or fetching of data, code and/or other information, which may be used, consumed and/or processed. In this regard, the system memory **352** may comprise different memory technologies, including, for example, read-only memory (ROM), random access memory (RAM), Flash memory, solid-state drive (SSD), and/or field-programmable gate array (FPGA). The disclosure, however, is not limited to any particular type of memory or storage devices. The system memory **352** may store, for example, configuration data, which may comprise parameters and/or code, comprising software and/or firmware, logging data, etc.

The communication subsystem **354** may comprise suitable circuitry operable to communicate signals from and/or to the electronic device, such as via one or more wired and/or wireless connections. In this regard, the communication subsystem **354** may be configured to support one or more wired or wireless interfaces, protocols, and/or standards, and to facilitate transmission and/or reception of signals to and/or from the VAD **300**, and/or processing of transmitted and/or received signals, in accordance with the applicable interfaces, protocols, and/or standards. Examples of signal processing operations that may be performed by the communication subsystem **354** comprise, for example, filtering, amplification, analog-to-digital conversion and/or digital-to-analog conversion, up-conversion/down-conversion of baseband signals, encoding/decoding, encryption/decryption, and/or modulation/demodulation. For example, the communication subsystem **354** may be configured to support broadcast of alert related signals, via the antenna(s) **340**.

The I/O subsystem **356** may comprise suitable circuitry for managing user interactions with the VAD **300**, such as to enable obtaining input from and/or providing output to device user(s). The I/O subsystem **356** may support various types of inputs and/or outputs, including, for example, video, audio, tactile, and/or textual. In this regard, dedicated I/O devices and/or components, external to (and coupled with) or integrated within the VAD **300**, may be utilized for inputting and/or outputting data during operations of the I/O subsystem **356**. Examples of such dedicated I/O devices may comprise user interface components or devices (e.g., the display **312**), audio I/O components (e.g., speakers and/or microphones), mice, keyboards, touch screens (or touchpads), and the like. In some instances, user input

obtained via the I/O subsystem **356**, may be used to configure and/or modify various functions of particular components or subsystems of the VAD **300**.

The logging management component **358** may comprise suitable circuitry for managing logging operations in the VAD **300**. The logging operations may comprise compiling log files (stored in the system memory **352**) containing data relating to alerts, as described above.

Also, while not shown in FIG. **3**, the VAD controller unit **330** may also comprise component for managing power supply (e.g., to the VAD controller unit **330** itself, and/or to other units, such as the VAD operator unit **310**).

As noted above, as shown in the example implementation illustrated in FIG. **3**, the VAD **300** may be implemented as multi-unit system, comprising multiple separate components (the VAD operator unit **310**, the VAD antenna unit **320**, and the VAD controller **330**). In this regard, as noted each of the different physical unit may be configured for placement at particular location and/or position, selected for optimal performance with respect to functions and/or operations provided by that unit. For example, the VAD operator unit **310** may be configured for placement within the operator compartment (e.g., train cockpit) at position optimal for providing output to and/or receiving input from the operator (e.g., top of the dashboard). The VAD antenna unit **320**, may be configured for placement outside (and on top) of the engine car. The VAD controller unit **330** may be configured for placement within the engine car, but out of the way (for convenience).

As the VAD controller unit **330** may house the bulk of the VAD resources (e.g., processing resources, storage resources, etc.), the VAD controller **330** may be configured to support connect to and/or communicate with the remaining unit(s) and/or available resources that may be utilized in support of operations of the VAD **300**. For example, the VAD controller unit **330** may comprise data port **340**, for enabling connecting to the VAD **300** for extracting data therefrom (e.g., log files) and/or inputting data thereto (e.g., for (re)configuration); a power connector **342** (e.g., drawing power from sources within the train); a VAD operator unit (VOU) connector **344**; configured for connecting to the VAD operator unit **320** (e.g., to provide power thereto, exchange data therewith, etc.); one or more antenna connectors **346** (e.g., for connecting to the VAD antenna unit **320**, existing antennas in the train, etc.); one or more GNSS connectors **348**, for connecting to existing GNSS systems (or transceivers); etc.

FIG. **4** illustrates an example wayside detection unit (WDU), in accordance with the present disclosure. Shown in FIG. **4** is a wayside detection unit (WDU) **400**.

The WDU **400** may comprise suitable one or more of hardware (including circuitry and/or other hardware components), software, and combination thereof for implementing various aspects of the present disclosure, particularly with respect to the wayside detection and/or alert related functions in support of worker protection solutions. The WDU **400** may be a particular example implementation of the WDU **130**, as described with respect to FIGS. **1**A and **1**B. In this regard, as noted above WDUs may be configured as portable (movable) devices that are placed along the expected path (e.g., train tracks) of vehicles that may pose safety threats to workers at particular locations. The WDU **400** is operable to perform such functions, in support of work protection systems in accordance with the present disclosure, as detecting approaching vehicles, triggering alerts at wearable devices (e.g., by broadcasting signals configured for interfacing with the wearable devices (e.g., PADs **100**) to trigger the alerts thereby), and triggering critical alarms when a train enters a work area, as well as additional alert related functions, such logging alert related data, etc.

In the example implementation illustrated in FIG. **4**, the WDU **400** may comprise a housing **410** for enclosing various components of the WDU **400** and/or allowing attachment to certain external elements or structures. The housing **410** may be constructed to be suitable for the intended operation environment and/or conditions of the WDU **400** (e.g., being constructed to be very rigid, to withstand accidental impacts during deployment and/or when it knocked down), and to withstand environmental conditions associated with outside/external use (e.g., rain, extreme cold/heat), etc.). The WDU **400** has one or more antennas **440**, used in transmitting and/or receiving signals (e.g., broadcast alert related signals). Further, the WDU **400** may have sensory elements, such as a train detector **430**. In this regard, the train detector **430** may be operable to monitor, detect, and track approaching vehicle, using one or more suitable technologies (e.g., visual, infrared, laser ranging, etc.), and/or to enable generating corresponding data (distance, relative speed, etc.). The WDU **400** typically would also comprise (or can be coupled to) a support structure **420**, such as a rigid tripod, to enable placement of the WDU **400**, such as near train tracks.

Internally, the WDU **400** may comprise suitable circuitry for performing various operations in support of its functions. For example, the WDU **400** may comprise one or more main processors **450**, a system memory **452**, a communication subsystem **454**, a sensor management component **456**, and a logging management component **458**.

Each main processor **450** may comprise suitable circuitry operable to process data, and/or control and/or manage operations of the WDU **400**, and/or tasks and/or applications performed therein. In this regard, the main processor **450** may configure and/or control operations of various components and/or subsystems of the WDU **400**, by utilizing, for example, one or more control signals. The main processor **450** may comprise a general purpose processor (e.g., CPU), a special purpose processor (e.g., application-specific integrated circuit (ASIC)), or the like. The disclosure, however, is not limited to any particular type of processors. The main processor **450** may enable running and/or execution of applications, programs and/or code, which may be stored, for example, in the system memory **452**. Alternatively, one or more dedicated application processors may be utilized for running and/or executing applications (or programs) in the WDU **400**.

The system memory **452** may comprise suitable circuitry for permanent and/or non-permanent storage, buffering, and/or fetching of data, code and/or other information, which may be used, consumed and/or processed. In this regard, the system memory **452** may comprise different memory technologies, including, for example, read-only memory (ROM), random access memory (RAM), Flash memory, solid-state drive (SSD), and/or field-programmable gate array (FPGA). The disclosure, however, is not limited to any particular type of memory or storage devices. The system memory **452** may store, for example, configuration data, which may comprise parameters and/or code, comprising software and/or firmware, logging data, etc.

The communication subsystem **454** may comprise suitable circuitry operable to communicate signals from and/or to the electronic device, such as via one or more wired and/or wireless connections. In this regard, the communication subsystem **454** may be configured to support one or

more wired or wireless interfaces, protocols, and/or standards, and to facilitate transmission and/or reception of signals to and/or from the WDU **400**, and/or processing of transmitted and/or received signals, in accordance with the applicable interfaces, protocols, and/or standards. Examples of signal processing operations that may be performed by the communication subsystem **454** comprise, for example, filtering, amplification, analog-to-digital conversion and/or digital-to-analog conversion, up-conversion/down-conversion of baseband signals, encoding/decoding, encryption/decryption, and/or modulation/demodulation. For example, the communication subsystem **454** may be configured to support broadcast of alert related signals, via the antenna(s) **440**.

The sensor management component **456** may comprise suitable circuitry for managing sensors, such as the train detector **430**. For example, the sensor management component **456** may control the selection of detection and ranging technology implemented by the train detector **430**, set the parameters required for its operations, and/or process information obtained via the train detector **430**, to generate corresponding data (e.g., distance to approaching train, relative speed, etc.).

The logging management component **458** may comprise suitable circuitry for managing logging operations in the WDU **400**. The logging operations may comprise compiling log files (stored in the system memory **452**) containing data relating to alerts, as described above.

The WDU **400** may comprise a data port **460** for extracting data (e.g., log files) from and/or inputting data (e.g., (re)configuration data) into the WDU **400**.

Other embodiments of the invention may provide a non-transitory computer readable medium and/or storage medium, and/or a non-transitory machine readable medium and/or storage medium, having stored thereon, a machine code and/or a computer program having at least one code section executable by a machine and/or a computer, thereby causing the machine and/or computer to perform the processes as described herein.

Accordingly, various embodiments in accordance with the present invention may be realized in hardware, software, or a combination of hardware and software. The present invention may be realized in a centralized fashion in at least one computing system, or in a distributed fashion where different elements are spread across several interconnected computing systems. Any kind of computing system or other apparatus adapted for carrying out the methods described herein is suited. A typical combination of hardware and software may be a general-purpose computing system with a program or other code that, when being loaded and executed, controls the computing system such that it carries out the methods described herein. Another typical implementation may comprise an application specific integrated circuit or chip.

Various embodiments in accordance with the present invention may also be embedded in a computer program product, which comprises all the features enabling the implementation of the methods described herein, and which when loaded in a computer system is able to carry out these methods. Computer program in the present context means any expression, in any language, code or notation, of a set of instructions intended to cause a system having an information processing capability to perform a particular function either directly or after either or both of the following: a) conversion to another language, code or notation; b) reproduction in a different material form.

While the present invention has been described with reference to certain embodiments, it will be understood by those skilled in the art that various changes may be made and equivalents may be substituted without departing from the scope of the present invention. In addition, many modifications may be made to adapt a particular situation or material to the teachings of the present invention without departing from its scope. Therefore, it is intended that the present invention not be limited to the particular embodiment disclosed, but that the present invention will include all embodiments falling within the scope of the appended claims.

What is claimed is:

1. A system for worker protection, the system comprises:
- a compact wearable personal alert device, configured for use by a worker, the personal alert device comprising:
  - a housing for enclosing components of the personal alert device;
  - an attachment structure for attaching the personal alert device to the worker or an item used by the worker;
  - a power supply for powering components of the personal alert device;
  - a communication component, comprising one or more antennas, configured for transmitting and/or receiving wireless signals;
  - one or more indicator components, for outputting alert indications; and
  - one or more circuits operable to process signals and data, and to perform one or more applications or functions relating to operations of the personal alert device;
  - wherein the personal alert device is operable to:
    - process signals received from a companion alert device, wherein the companion alert device is deployed locally in proximity of the personal alert device and/or within vehicles operating in areas service by workers;
    - generate, in response to signals received from the companion alert device, a safety alert; and
    - output, via the one or more indicator components, one or more alert indications to the worker based on the safety alert.

2. The system of claim **1**, wherein the personal alert device is operable to implement a power management scheme for optimizing power consumption in the personal alert device.

3. The system of claim **2**, wherein the power management scheme comprises transitioning the personal alert device from a full operation mode to a power-saving mode, the power-saving mode comprising at least one of shut-down mode and low-function mode.

4. The system of claim **2**, wherein the personal alert device comprises at least one control component for generating control data applicable to the power management scheme.

5. The system of claim **4**, wherein the at least one control component comprises a movement sensor for sensing movement of the worker, configured to generate indications when the personal alert device is moving or not.

6. The system of claim **1**, wherein the one or more antennas comprise diversity antennas of identical or differing polarity, and the personal alert device is operable to support use of diversity during the transmitting and/or receiving of wireless signals.

7. The system of claim **1**, wherein triggering of alerts and/or broadcast of signals triggering of the alerts is based on one or more types of alert thresholds.

8. The system of claim 7, where the one or more types of alert thresholds comprise time-to-arrival (TTA), distance-from-train (DFT), and low-speed close proximity distance alert (CPD).

9. The system of claim 1, wherein the personal alert device is operable to communicate with one or more nearby alert devices, to forward received signals and/or alerts generated in response to the received signals among the personal alert device and the one or more nearby alert devices.

10. The system of claim 1, wherein the personal alert device is operable to log data relating to alerts triggered and/or handled by the personal alert device.

11. The system of claim 1, wherein the companion alert device comprises a vehicle-mounted alert device, a wayside detection unit, or another personal alert device.

12. The system of claim 1, wherein the one or more indicator components comprise at least one of visual indicator, audio indicator, and a tactile indicator.

13. The system of claim 1, wherein the power supply comprises a rechargeable power supply.

14. The system of claim 13, wherein the rechargeable power supply is operable to recharge without direct connection.

15. The system of claim 1, wherein the attachment structure comprises a clip structure or a strap structure.

16. The system of claim 1, wherein the personal alert device comprises one or more acknowledgment components, configured for receiving input from the worker, to indicate acknowledgment of the safety alert.

17. The system of claim 16, wherein the personal alert device is operable to communicate a signal to the companion alert device to indicate the acknowledgment of the safety alert by the worker.

18. The system of claim 1, wherein the housing completely seals internal space enclosing components of the personal alert device, and wherein charging the power supply and/or communication of data to and/or from the portable alert device is done without direct connection.

19. The system of claim 1, wherein the personal alert device is operable to implement configurable alarm management for allowing setting and/or adjusting of rules controlling triggering and/or handling of alerts.

20. The system of claim 1, wherein the personal alert device is operable to:

receive Global Navigation Satellite System (GNSS) signals;

determine location information based on the received GNSS signals; and

utilize the location information in conjunction with at least one of the operations of the personal alert device.

21. A system for worker protection, the system comprises:

a vehicle-mounted alert device, configured for use on a vehicle, the vehicle-mounted alert device comprising:

a housing for enclosing components of the vehicle-mounted alert device;

a communication component, comprising one or more antennas, configured for transmitting and/or receiving wireless signals;

one or more circuits operable to process signals and data, and to perform one or more applications or functions relating to operations of the vehicle-mounted alert device; and

one or more input/output (I/O) components, for receiving input from an operator of the vehicle and/or for providing output to the operator of the vehicle;

wherein the vehicle-mounted alert device is operable to:

broadcast alert triggering signals; and

generate, in response to triggering of alerts, data relating to alerts and/or to other devices or objects in path of the vehicle; and

output based on the data, via the one or more I/O components, feedback information to the operator.

22. The system of claim 21, wherein the vehicle-mounted alert device is configured, at least in part, as portable, detachable and movable from the vehicle.

23. The system of claim 21, wherein the vehicle-mounted alert device is operable to log data relating to alerts triggered in response to movement of the vehicle.

24. The system of claim 21, wherein the vehicle-mounted alert device is arranged into a plurality of separate physical units that comprises at least a broadcast unit comprising at least the communication component, the broadcast unit is configured to attachment external to the vehicle.

25. The system of claim 24, wherein the plurality of separate physical units comprises an operator unit comprising at least the one or more I/O components, the operator unit is configured for use by the operator.

26. The system of claim 21, wherein the vehicle-mounted alert device is operable to:

receive a signal indicating an acknowledgment of a safety alert by a worker in response to the broadcasted alert triggering signals; and

provide, via the one or more I/O components, an indication of the acknowledgement to the operator of the vehicle.

27. A system for worker protection, the system comprises:

a wayside detection unit, configured for placement on or near path of a vehicle, the wayside detection unit comprising:

a housing for enclosing components of the wayside detection unit;

a support structure for holding and supporting the wayside detection unit when placed on or near the path;

a power supply for powering components of the wayside detection unit;

one or more sensory components, for detecting, monitoring, and/or tracking vehicles;

a communication component, comprising one or more antennas, configured for transmitting and/or receiving wireless signals;

one or more circuits operable to process signals and data, and to perform one or more applications or functions relating to operations of the wayside detection unit;

wherein the wayside detection unit is operable to:

determine, based on sensory data obtained from the one or more sensors, when the vehicle is approaching the wayside detection unit; and

broadcast, to one or more companion alert devices, alert related signals, relating to the approaching of the vehicle.

28. The system of claim 27, wherein the wayside detection unit is operable to forward alerts and/or alert related signals communicated by one or more nearby alert devices, the one or more nearby alert devices comprises vehicle alert devices, personal alert devices and/or other wayside detection units.

29. The system of claim 27, wherein the wayside detection unit is operable to log data relating to alerts triggered in response to the broadcasted alert related signals.

30. The system of claim **27**, wherein the support structure comprises a tripod or a connection element for permanent connection to wayside equipment.

* * * * *

EXHIBIT F

News

MTA and Piper Networks Demonstrate Successful Ultra Wideband Pilot

JAN 29, 2020 / THE PIPER TEAM / SAFETY, TECHNOLOGY, TRANSIT / COMMENTS DISABLED

New & Innovative Technologies Complement New York City Transit's Unprecedented $7.1 Billion Investment to Modernize Outdated

Signaling System

Successful 9-Month Ultra-Wide Band Pilot & Proof of Concept Result of MTA Genius Transit Challenge First Launched in 2017

New York, NY (January 23, 2020)

MTA New York City Transit today demonstrated the successful results of a nine-month pilot of ultra-wideband (UWB) technology on the Flushing and Canarsie lines to modernize the agency's signaling system and deliver safer, faster and more reliable service for customers.

MTA officials were joined by executives from Thales and Piper Networks along the line who have completed the nine-month pilot program with strong results and demonstrated the potential for UWB positioning technologies to integrate seamlessly with Communications-Based Train Control (CBTC) to improve system reliability and the speed of delivery for upgraded signaling systems. The innovative pilot complements the MTA's unprecedented $7.1 billion investment into modernizing its outdated signaling system over the next several years as part of the historic $51.5 billion Capital Plan. The initiative and partnership are the result of the MTA's Genius Transit Challenge first launched in 2017, which challenged leading companies from around the world to improve subway signals, capacity and communications for the future.

"Signals have long been described as the backbone of the subway system, and the work to modernize them is very much at the heart of our transformation work," said Mark Dowd, the MTA's Chief Innovation Officer. "Today is an essential first step in our broader efforts to rethink everything we do when it comes to signaling and how we can achieve greater reliability for our customers across the system."

"Ultra-wideband wireless technology brings the promise of fewer and shorter delays, and faster and cheaper installation of modern CBTC signaling, by eliminating much of the equipment traditionally fitted under trains and on tracks. This is a game-changer for our customers," said Pete Tomlin, New York City Transit's head of signaling. "We are eager to work with innovative companies as we continue to reimagine our approach to installing modern signaling across the system as part of the MTA's historic 2020-2024 Capital Plan."

In March 2019, the NYC Transit awarded Thales, in partnership with Piper, a contract for a UWB-based Train Control System Pilot Program on the line. At the same time, NYC Transit awarded Siemens, in partnership with Humatics, a contract for a UWB-based Train Control System Pilot Program on the Canarsie line. The scope of the pilot was to prepare the new

platform for safety certifiability and it consisted of nine months of testing and collecting 2,500 hours of operational data. An automated data upload facility at Corona Yard has allowed for cloud-based processing of all collected sensor data from the line, which could then be compared with data from the Communications-Based Train Control (CBTC) system and a LIDAR-based “ground truth” digital map.

As part of the pilot program, four trains on the line, which is one of two lines in the system already equipped with CBTC, have been outfitted with the Thales’ CBTC system that integrates Piper’s UWB technology. Four trains on the Canarsie line were outfitted with Siemens’ CBTC system that integrates Humatics UWB technology.

> Ultra-wideband wireless technology brings the promise of fewer and shorter delays, and faster and cheaper installation of modern CBTC signaling, by eliminating much of the equipment traditionally fitted under trains and on tracks. This is a game-changer for our customers.
>
> - Pete Tomlin, Signaling Chief for the Metropolitan Transportation Authority (MTA)

The demonstration, which took place on the express track of the line between the 61 St-Woodside and 40 St stations, showed the potential of an even more precise positioning system, UWB, to improve system performance and recovery. The pilot proved it could also help accelerate the implementation of CBTC. Additionally, because UWB technology is installed off the tracks rather than on the tracks, it could be considerably easier for NYCT personnel to maintain in the long term and cut down on delays stemming from malfunctioning equipment on the tracks.

Key advantages of UWB pilot as the MTA works to modernize its signaling system as demonstrated in the include:

- Rapid implementation, achieved through a reduction of train-borne equipment by removal of undercarriage installation, which would enable the MTA to modernize aging subway infrastructure on an accelerated timeline.
- Increased train positioning accuracy, achieved through utilization of modern onboard sensors including UWB radios, which could contribute to fewer and shorter service delays for passengers.
- Accelerated start-up position initialization, enabling a train to initialize and switch to

Automatic Train Operation (ATO) faster than current-generation CBTC systems.

“Thanks to this partnership with NYCT, we’re delivering cutting edge technology as we test the next generation of train positioning,” said Dominique Gaiardo, Vice President and Managing Director for urban rail signaling business at Thales. “Thales has integrated modern onboard sensors with a UWB network to create an enhanced next generation positioning system for our CBTC digital signaling architecture. The new system has higher accuracy, resiliency, and availability and is quicker to deploy than current generation products.”

“Today we took an exciting step in safety certifying Piper’s Ultra-Wideband technology for the MTA, and we’re looking forward to rolling out this technology across other subway lines as part of the Fast Forward program,” said Robert Hanczor, CEO of Piper Networks. “Together with our partner Thales, we worked closely with the NYCT leadership team to who continually demonstrated their desire to support new technology providers and encourage innovation in the transit sector.”

To help accelerate the modernization of the signaling system, NYC Transit has announced a third vendor, Mitsubishi Electrical Power Products, to qualify as a CBTC supplier. Mitsubishi successfully completed, within budget, a development and safety certification program awarded in September 2015.

NEXT STEPS

NYC Transit will take the lessons learned from CBTC implementation on the Flushing line and incorporate industry best practices to improve and expedite future implementation on other subway line corridors, including better costing estimates, formalized personnel structure and responsibilities, enhanced project and contractor monitoring, more frequency surveys and enhanced attention on subway car interfacing. NYC Transit has created a new database to capture cross-discipline feedback and information from CBTC projects to better track such valuable information to help improve future CBTC processes.

MTA Press Release

MTA Demonstrates Successful Ultra-Wideband Technology Pilot on Flushing and Canarsie Lines – January 23, 2020

Save

Copyright © 2021 Piper

EXHIBIT G

HUMATICS RAIL NAVIGATION SYSTEM

PRECISION POSITIONING FOR RAIL & TRANSIT VEHICLES

Humatics' Rail Navigation System is a drop-in replacement for traditional railway odometry sensors such as tachometers, transponders, and doppler radars. Humatics' systems consist of industrial-grade ultra-wideband (UWB) beacons and Inertial Measurement Units (IMU) providing position, speed, and acceleration to vital and non-vital carborne systems for signaling, train control, train management, and passenger information.

Humatics' Rail Navigation System operates similarly to satellite positioning serving as "terrestrial satellites" and works by continually ranging from carborne beacons to a constellation of UWB beacons. Given this architecture, UWB ranging is especially well-suited to augment GNSS positioning on sections of track with poor or no signal reception such as urban canyons and tunnels.

BENEFITS

1. Alternative to GNSS in tunnels, stations, depots, and urban canyons
2. Precise sub-10cm safety-critical positioning at high speed in all weather conditions
3. Longest-ranging ultra-wideband radio technology on the market

Through its high-availability and ultra-precise UWB localization network, Humatics enables safety-critical train positioning in all conditions, unlocking a variety of applications including automatic train operations, platooning, advanced driver assistance, platform door control, roadway worker safety, and emergency location services.

Humatics' engineering team develops system architectures to meet your functional requirements and Reliability, Availability, Maintainability, Safety (RAMS) targets. In the process of doing so, we balance the tradeoffs between positioning precision and cost of deployment. Alternatively, Humatics provides a robust UWB ranging API if your team prefers to integrate our UWB radios into your own navigation solution.

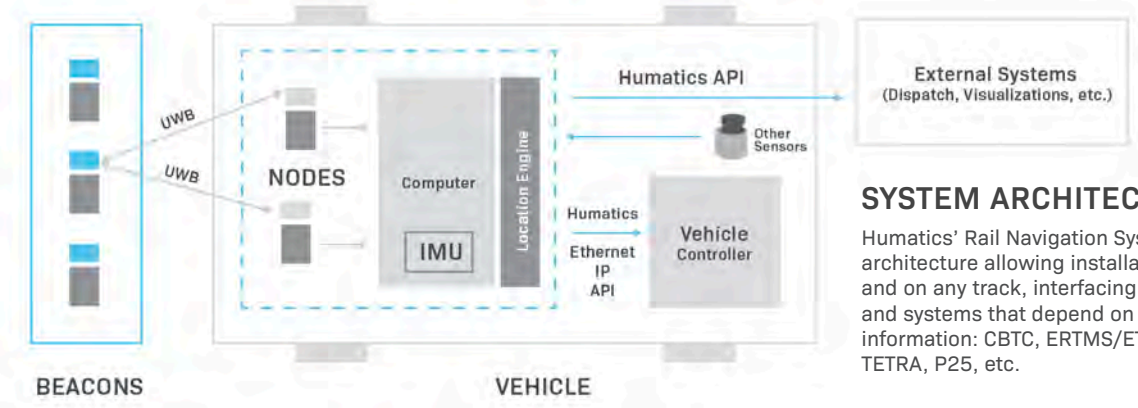

SYSTEM ARCHITECTURE

Humatics' Rail Navigation System has a simple architecture allowing installation within any vehicle and on any track, interfacing into vehicle controllers and systems that depend on safety-critical positioning information: CBTC, ERTMS/ETCS, PTC, TCMS, CAD/AVL, TETRA, P25, etc.

© 2020 Humatics Corporation
This document is confidential, proprietary and only for the information of the intended recipient and may not be used, published or redistributed without the prior written consent of Humatics Corporation.

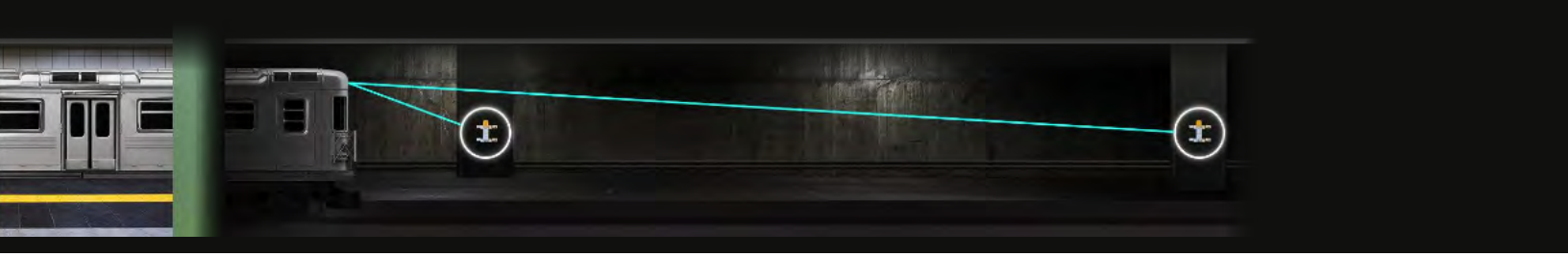

APPLICATIONS

SIGNALING & TRAIN CONTROL
Replace legacy odometry systems such as wheel sensors and track-mounted transponders. Interfaces with Communication-Based Train Control (CBTC), European Train Control System (ETCS/ERTMS), Positive Train Control (PTC), and transit CAD/AVL systems.

DRIVER ASSISTANCE SYSTEMS
Integrate with the onboard Train Control & Management System (TCMS) and Driver Machine Interface (DMI) to provide situational awareness and enable precision stops at platforms. Provide zero-speed signal and train type information to SIL-4 door controllers.

AUTOMATIC TRAIN OPERATION (ATO)
Train-to-train UWB ranging provides the ultra-precise high-frequency relative positioning information necessary for vehicle platooning. In addition, train-to-train UWB communication enables the synchronization of braking and traction between trainsets.

HI-RAIL VEHICLES AND ROADWAY WORKER PROTECTION
UWB provides the ranging and communication infrastructure for roadway worker protection systems. The positioning precision allows for making the safety-critical distinction between workers and vehicles on and off the tracks.

YARD AND DEPOT MANAGEMENT
Track buses and railcars in yards and indoor maintenance facilities. Humatics industry-leading 300m ranging distance and robustness to interference means large depots require fewer UWB beacons to achieve precise vehicle positioning.

SPECIFICATIONS

PERFORMANCE
Provides position, speed, acceleration, direction, and associated uncertainties
10 seconds dead reckoning with IMU
Proven to track vehicles traveling over 55 mph (designed for >200 mph)
Variable update rate up to 200Hz
Flexible sensor fusion with GNSS, Lidar, Eurobalise, and other commonly used odometry technologies
Diversified and redundant architecture to meet project RAMS requirements

RELIABILITY
Wayside Beacon MTBF > 600,000 hours
Carborne Node MTBF > 165,000 hours
Carborne Computer MTBF > 52,000 hours

STANDARDS	
IEC 62278 / EN 50126	Specification and demonstration of reliability, availability, maintainability and safety (RAMS)
IEC 62279 / EN 50128	Software for railway control and protection systems
IEC 62280 / EN 50159	Safety-related communication in transmission systems
IEC 62425 / EN 50129	Safety-related electronic systems for signaling
IEC 62443	Industrial Automation and Control Systems (IACS) cybersecurity
IEEE 1474.1, 1474.4	Communications-Based Train Control (CBTC)
AREMA	Communications and Signals Manual
MIL-STD-810	Environmental Engineering Considerations and Laboratory Tests
NFPA 130	Fire protection and life safety requirements for underground, surface, and elevated fixed guideway transit and passenger rail systems.
IEC 61373	Rolling stock equipment – Shock and vibration tests
IEEE 1478	Environmental Conditions for Transit Railcar Electronic Equipment
EN 50121	Railway applications. Electromagnetic compatibility

UWB	
Range:	Line of sight, up to 300 meters
Ranging Precision:	Architecture-dependent, can be as low as +/- 2cm
Operating Spectrum:	4 - 4.9 GHz
Unique beacon IDs and channel codes protect transmission and enhance security	
Real-time diagnostics available for ease of maintenance	
FCC Part 15 Compliant	

IMU
Triaxial Accelerometer, Dynamic Range of +/- 40g
Triaxial Gyroscope, Dynamic Range of +/- 2000 degrees/second

CARBORNE EQUIPMENT	
Interface:	Ethernet IP
Navigation Computer Input Power:	5-48 VDC, nominal 37.5V
Power Consumption :	< 15 Watts @37.5V
Ambient Operating Temperature:	-40C to +70C
Mechanical Shock & Operating Vibration:	IEC 61373 Compliant
Ingress Protection:	IP 67

WAYSIDE BEACONS	
Input Power:	5-48VDC
Power Consumption:	< 5 Watts
Ambient Operating Temperature:	-40 to +70C
Mechanical Shock & Operating Vibration:	AREMA Communications and Signal Manual (C&S) Compliant
Ingress Protection:	IP 67

© 2020 Humatics Corporation
This document is confidential, proprietary and only for the information of the intended recipient and may not be used, published or redistributed without the prior written consent of Humatics Corporation.

EXHIBIT H

THE HUMATICS VISION FOR RAIL NAVIGATION

Humatics' approach to Rail and Transit hinges on four principles: (1) industrial UWB provides the precision, reliability, and robustness needed for train control; (2) high performance navigation requires fusing sensor data together for a given application; (3) safety critical applications, such as modernizing signaling, require a system's level approach to safety certification, and (4) system performance and capabilities are proven through data.

Humatics Created Industrial-Grade UWB

Humatics invented UWB in 1987 and has spent three decades perfecting and deploying the technology worldwide. The result is industrial-grade UWB. Most UWB systems use commercial UWB radios which have shorter range, inferior precision, and limited reliability and security. However, harsh environments and safety critical applications require more. Humatics industrial-grade UWB addresses these challenges through precise positioning down to an inch or less and unmatched security and robustness to challenging environmental conditions, such as dust and snow, multipath and interference.

Humatics' systems have a proven track record in rail applications: transit agencies and rail engineering firms have used Humatics' solutions to improve and modernize rail signaling. Humatics UWB was the underlying technology for two of the four signaling winners of the 2017 MTA Genius Challenge. Humatics' own success in the 2019 MTA UWB Pilot, outfitting over 5 miles of track and four trains, further proves the power of industrial UWB: for example, Humatics' UWB solution required wayside beacons every 360 feet on average compared to nearly 100 feet for commercial UWB solutions.

For Critical Applications, You Need More Than UWB

When safety and robustness matter, UWB alone won't do the job. UWB plays a key role, but critical navigation systems require fusing data from additional sensors. Relying on just one technology reduces performance and, more importantly, creates failure modes (when the singular technology fails) that compromise safety and reliability. Taking the best aspects of each sensor and tying them together with software provides a superior solution. History has proven this concept time and time again: it took people to the moon 50 years ago and is the foundation of how critical systems such as airplanes and industrial robots navigate.

Humatics acknowledges that UWB plays an important role in navigation moving forward but it is only part of the solution. Humatics combines UWB ranges with data from an inertial measurement unit device to fortify and enhance performance. This approach has been proven in the field: not only did Humatics' solution meet the performance requirements, but it also successfully positioned the train even when UWB sensors were unavailable for short periods of time. System "up-time" also benefits from this approach with the solution providing 99.9999% or greater availability in a 2-out-of-3 architecture in our deployment with the MTA. Furthermore, Humatics' navigation solution is capable of ingesting any sensor data allowing for the right sensors to be used to solve the problem at hand.

Safe Systems vs. Safe Components

Rail systems aren't just critical, they're safety critical. Transit systems all over the world are undergoing signaling transformations trying to upgrade the capacity and reliability of entire systems in a matter of years instead of decades. UWB-based navigation systems play a key role in signal modernization efforts, but achieving these goals --- increased rider capacity through more frequent, reliable train service --- requires coupling navigation systems with train control solutions such as communications-based train control. Combining two independent systems in a complex safety application requires a holistic approach towards system design and, more importantly, safety certification, examining navigation and train control together rather than an evaluation of the discrete parts.

Humatics advocates for a systems-safety centric approach to every project we undertake. Key decisions, such as implementing a specific safety architecture, should not be made in a vacuum. Rather than focusing on creating a "safe black box" for just the Humatics technology within the system, we collaborate with partners to create integrated safety-certified systems that solve the customer's problem. Safety has no shortcuts and the fastest path to revenue service is to certify an entire solution in a single process from the start.

The Proof is in the Data

At Humatics, claims of performance and capabilities are nice, but data speaks the truth. Data is what we use to gauge performance of our system, fuel continual improvement, and articulate our capabilities to our customers. Claiming that Humatics has a robust solution is fine, but showing a 99.9999% system availability over the course of thousands of runs proves that our customers can be confident in using our solution as part of their integrated system. Data collection and analyses is ingrained in our DNA and we provide the data driven evidence necessary for our customers to make informed decisions.

As Humatics partners and customers look to move forward with resignaling initiatives around the world, these concepts --- commiting to UWB sensor technologies built to perform in harsh environments, understanding that robust, high performance navigation requires combining UWB with other sensor technologies, recognizing that safety requires a system approach, and continually assessing with data --- are the fastest pathways to modern, robust, and safe transit signaling systems.

About Humatics

Recognized as the inventor and leader in industrial ultra-wideband, Humatics has built the first microlocation system for the industrial world that fuses proprietary industrial-grade UWB, sensors, and data, delivering best in class range and precision and enabling transit systems to navigate safely and reliably. Customers use Humatics' systems to solve mission-critical localization and navigation challenges in harsh environments where other technologies fall short.

Founded by world leaders in AI-assisted piloting, autonomous navigation, and high-precision radar, Humatics is headquartered in Waltham, Massachusetts with an office in Huntsville, Alabama. Humatics is the underlying technology behind two out of the four winners in the Signaling category for the MTA Genius Transit Challenge and, in 2019, completed a successful UWB Pilot with the MTA, demonstrating that UWB can cost effectively accelerate MTA signaling modernization. For more information, visit www.humatics.com.

© 2020 Humatics Corporation
This document is confidential, proprietary and only for the information of the intended recipient and may not be used, published or redistributed without the prior written consent of Humatics Corporation.

EXHIBIT I

Piper Ultra Wideband Technology Overview

Piper's UWB positioning technology is built specially for the transit industry. In New York City, the MTA can use Piper technology to accelerate the upgrading of train control signaling systems, enhance worker safety, and improve headways in order to move more riders each day.

01. Installation

Piper equipment is small and easy to install - helping put trains back into service faster with less downtime.

02. Positioning

Piper onboard sensors communicate with track-side radios many times each second to determine accurate distances within a few inches.

03. Computing

Piper onboard computers use the positioning data to calculate the location of the train along the track and feed that information into the train control system.

04. Smart Use of Data

Piper's UWB system can also be used for many operational functions including track worker safety, work train and equipment location, and fleet management.

Benefits of Piper Transit Technology

Pinpoints the location of trains down to a few inches.	Improves headways allowing trains to run closer together and more frequently.	Provides advanced track worker protection functionality.	Accelerates the installation times and performance of CBTC and PTC.	Tracks work trains and equipment for improved maintenance.

Learn more at pipernetworks.com

EXHIBIT J

VITAL ULTRA WIDEBAND TRAIN POSITIONING

Piper's ETLS (Enhanced Transit Location System) uses Ultra Wideband (UWB) Technology to track the location and movement of trains, vehicles, equipment, people and other objects in real-time for various location awareness needs.

Piper's ETLS determines the location of trains throughout a system in real-time with unmatched positional certainty. The system is like a blanket of radio coverage over the subway lines - virtually surrounding the tracks with smart sensors that pinpoint train location down to a few inches.

Watch an explantion video on Piper's recent Ultra Wideband train positioning deployment in New York City on the MTA's Flushing 7 line.

Watch Video

WORLD'S FIRST SIL-4 SAFETY CERTIFICATION FOR ULTRA WIDEBAND TRAIN CONTROL SYSTEM

Piper Networks has received a CENELEC Safety Integrity Level 4 (SIL-4) Certification for its Ultra Wideband (UWB) train control system from independent safety assessor, TÜV SÜD. The certification is a milestone achievement for Piper and the transportation industry as it becomes the first ever UWB-based position and speed technology to achieve vitality. The system is now ready for integration with signaling and train control programs being implemented by transportation agencies and their engineering contractors in the US and worldwide.

©2021 PIPER NETWORKS. All rights reserved.

PiperNetworks.com | contactus@pipernetworks.com | 3636 Nobel Drive, San Diego, CA 92122

piper

Piper Ultra Wideband Technology Overview

Piper's UWB positioning technology is built specially for the transit industry. In New York City, the MTA can use Piper technology to accelerate the upgrading of train control signaling systems, enhance worker safety, and improve headways in order to move more riders each day.

02. Positioning

Piper onboard sensors communicate with track-side radios many times each second to determine accurate distances within a few inches.

03. Computing

Piper onboard computers use the positioning data to calculate the location of the train along the track and feed that information into the train control system.

01. Installation

Piper equipment is small and easy to install - helping put trains back into service faster with less downtime.

04. Smart Use of Data

Piper's UWB system can also be used for many operational functions including track worker safety, work train and equipment location, and fleet management.

How it works

- **Piper UWB Tags** are available in various form factors, power and battery capacities based on size and environmental requirements. They are easily attached to any asset that must be tracked or monitored and can be customized to meet your needs. For rail, they are typically installed in front & rear bonnets.
- **Piper UWB Anchors** are installed wayside on tunnel walls or on survey markers of elevated tracks. These anchors detect the tags in the trains using UWB radio signals. Each anchor detects multiple tags simultaneously and uses a Time-of-Flight algorithm to calculate the changing distance between the anchor and the tags in real-time.
- **Piper Tag Controllers** in the bonnet of the train capture this location data and relay the information to the Onboard Control Unit (OBCU) which in turn sends the data to the cloud.
- **Piper Remote Monitoring Dashboard** is cloud-based and relies on a combination of network infrastructure for connectivity where trains can feed the dashboard through an LTE connection.

BENEFITS OF PIPER ULTRA WIDEBAND SOLUTIONS

It's important to note that Piper is a systems integrator as well as a technology solutions provider and this has many benefits. Piper believes that the use of UWB in train control systems is an important evolutionary leap forward for signaling. Because UWB equipment is installed on the wayside and in the interior control cabinets on the train (as opposed to the track bed and the undercarriage of the rolling stock), the positioning systems required to manage train headways can be deployed faster, at lower cost, and with minimal disruption.

- **INCREASING SUBWAY THROUGHPUT**
  Ultra-precise positioning improves headways, allowing trains to run closer together and more frequently. The result is increased capacity that improves on-time performance and overall customer service.

- **REDUCING COST**
  Piper's positioning equipment significantly reduces the cost associated with the current generation of track bed units. Cars can be retrofitted in less than 2 hours and be ready for revenue service. As with most upgrades of trains or signaling, the majority of the cost is borne by the agency. Installing Piper equipment reduces the need for General Orders because the wayside equipment can be provisioned under flagging.

- **IMPROVING MAINTENANCE**
  Piper's UWB technology uses wayside instead of trackbed equipment, making it easier to install and safer to maintain. We are also able to adapt our equipment to existing infrastructure.

- **CAPTURING MORE VALUE FROM ASSETS**
  Once Piper equipment is installed, we can continue to collect data and introduce new technologies like our TrackSight™ without requiring a new build-out of infrastructure or requiring interface changes from the CBTC suppliers. Our equipment fits easily into train cabinets of legacy rolling stock and/or the Work Train fleet, which helps to reduce cabling required for positioning systems.

- **BUILDING INTEROPERABILITY**
  Interoperability with CBTC suppliers and UWB manufacturers will ensure that the technology will be compatible with future implementations. Piper is currently designing an interoperability specification that will help establish an industry standard for this technology.

- **INCREASING PERFORMANCE**
  UWB technology can help accelerate the installation times and performance of CBTC to be installed. Piper is focused on reducing the delays often associated with installing new equipment and improving reliability of revenue trains.

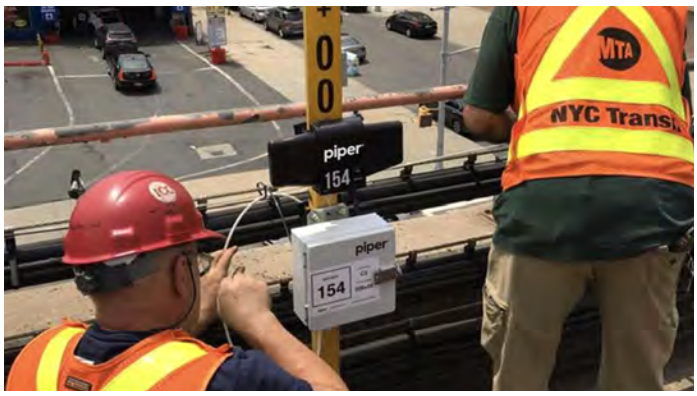

Piper team members were present in NYC and near the trackside during the wayside installation to answer questions and resolve issues quickly. Anchors were installed wayside of elevated tracks by being attached to survey markers. Anchors were also attached to predetermined locations in tunnels by Piper's custom developed bracketery.

Piper did a live demonstration of its train positioning technology to members of the media and NYCT leadership. This screen shows the devices in the front and rear of the trains are continuously being detected by several anchors on the wayside simultaneously, allowing for direction and speed determination.

CASE STUDY: ULTRA WIDEBAND TRAIN POSITIONING

METROPOLITAN TRANSPORTATION AUTHORITY, NYC SUBWAY SYSTEM

Overview

Piper is currently engaged in an ongoing project to assist Metropolitan Transit Authority (MTA) and the New York City Subway System with collecting real-time subway train location data. Using customized Piper UWB Tags installed on trains in combination with Piper UWB sensors deployed in underground and elevated stations and tracks, Piper aggregates a stream of ultra-precise real-time positioning data. By integrating the data with MTA's systems, Piper helps track and locate trains, power countdown clocks with reliable arrival information for riders, and improve safety of track workers.

Scope and Objective of the Pilot

Demonstrate the accuracy and reliability of a UWB-based Train Control System operating in Shadow Mode compared to a Revenue Service CBTC System. From the viewpoint of NYCT, the pilot project is related to the analysis of the Piper Networks UWB RPS system as a vital component of the CBTC system (providing train positioning required for CBTC operation). In this context, the UWB RPS provides the absolute reference locations on the guideway to the OBCU which uses the data to initialize localization of the train and re-localize, as needed.

Results

Piper successfully demonstrated a system which utilized UWB and enabled the greater CBTC system to provide Automatic Train Protection (ATP) and Automatic Train Operation (ATO) functions as defined in the Technical Specification. The system demonstrated no interruptions to the certified interfaces with the ATS and SSI subsystem. While the technical specification called for a system which provided positional accuracy of 6-inches (15.24 cm) while stationary and 12-inches while in motion (30.48cm), Piper was able to far exceed this requirement by demonstrating a system which reliably and continuously provided a positional accuracy between 2 to 4-inches. Piper also substantially exceeded the requirement for 2,500 hours of data collection by collecting over 4,000 hours of data.

"Ultra Wideband wireless technology brings the promise of fewer and shorter delays, and faster and cheaper installtion of modern CBTC signaling, by eliminating much of the equipment traditionally fitted under trains and on tracks. This is a game-changer for our customers." - Pete Tomlin, Former MTA Signaling Chief

©2021 PIPER NETWORKS. All rights reserved.

PiperNetworks.com | contactus@pipernetworks.com | 3636 Nobel Drive, San Diego, CA 92122

piper®

EXHIBIT K

LIMITS COMPLIANCE & COLLISION AVOIDANCE SYSTEM

Helix™ is an advanced, multi-sensor Limits Compliance and Collision Avoidance System (LCCAS) that uses LiDAR, UWB and other positioning technologies. The Maintenance of Way (MoW) safety solution allows for fleets of rail-bound and hi-rail equipment to be accurately detected and tracked on the railroad in real-time, thereby reducing the potential for worker injury, equipment damage, and operational disruptions resulting from accidents or major rule violations.

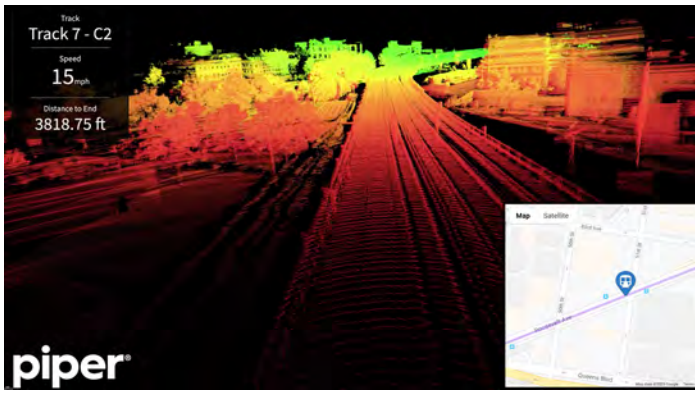

Piper Helix™ LCCAS incorporates multiple sensors to provide railroads with a vital train-centric positioning system:

- **GPS RTK** - High precision position & speed calculation for limits compliance and time synchronization.
- **UWB** - For localization in complex junctions and/or yards.
- **TrackSight™ LiDAR** - For obstacle detection and redundant position & speed calculations.
- **IMU** - Onboard inertial measurement unit.
- **HD Cameras** - Deliver live video from each vehicle.

Helix™ uses Piper's patent-pending, Solid State LiDAR technology, called TrackSight™, to compare real-time imaging to an onboard database. It constantly surveys tracks and maintains a detailed model of the territory to independently calculate the vehicle's position. Together with Piper's Ultra Wideband (UWB) technology, Helix™ provides consistent and redundant positioning data to an onboard system. The image above shows how the TrackSight™ portion of Helix™ is used for obstacle detection and position & speed calculation.

Limits Compliance • Collision Avoidance • Collision Detection

Object & Worker Detection • Live HD Video

Real-Time Employee-in-Charge & Operator Communication

Piper Networks is an innovative rail engineering solutions provider and systems integrator specializing in the development of transportation technologies. Founded in 2011, Piper has four primary product lines that serve the industry, including: Vital Train Positioning, Maintenance of Way (MOW) Protection, Automatic Train Protection (ATP), and Passenger Information Display Systems (PIDS). Piper's proprietary Ultra Wideband (UWB), GPS-RTK, and patent-pending TrackSight™ LiDAR image positioning technology are designed to operate in some of the most challenging transportation environments while maintaining pinpoint accuracy that improves performance for train operators and train control suppliers.

Watch Video

©2021 PIPER NETWORKS. All rights reserved.

PiperNetworks.com | contactus@pipernetworks.com | 3636 Nobel Drive, San Diego, CA 92122

HELIX™ by piper

MOW Limits Compliance & Collision Avoidance System (LCCAS) Overview

Piper's Helix™ LCCAS solution allows for fleets of rail-bound and hi-rail equipped MoW equipment to be detected and tracked on the railroad for the purpose of enhancing safety. The solution will serve to reduce the potential for employee and customer injury, equipment damage, and operational disruptions resulting from accidents and/or major rules violations.

01. Limits Compliance

GPS RTK technology communicates the details of MoW location and vehicle work limits with sub-meter accuracy.

02. Advanced Infrastructure Management (AIM)

Piper's AIM is integrated into 3rd party dispatch systems and allows for remote monitoring & managing of Helix-equipped vehicles.

03. Collision Detection

Onboard IMU devices provide valuable operational telemetry data and alert operators instantly to any collisions.

04. Collision Avoidance

UWB sensors deliver continuous positioning data relative to nearby MoW vehicles and personnel with in-cab alerts for operators.

05. HD Cameras

Deliver live video from each equipped MoW vehicle.

06. Object & Worker Detection

Alerts operators to presence of objects and workers in path of vehicles.

08. Employee in Charge (EIC)

EIC receives tablet with interface to monitor vehicles and limits in real-time.

07. Operator Display

Visual interface for operator with warnings and alerts.

Benefits of Piper Helix™ System

Reliable system provides Vital navigation of rail vehicles.	Works in extreme conditions & above or underground rail environments.	Advanced track worker and MoW equipment protection functionality.	Suite of sensor technologies includes UWB, LiDAR, IMU and optional GPS.	Consistent two-way communication with local MoW system using LTE Modem.

Learn more at pipernetworks.com

piper®

EXHIBIT L

Enhanced Transit Location Systems & Asset Tracking

Piper Networks is an innovative IT solutions provider and systems integrator with transportation industry expertise. We create reliable, real-time solutions that provide highly accurate location awareness and we do so consistently in some of the most challenging environments, like subway tunnels. Solutions include real-time train positioning, advanced worker safety systems, pinpoint asset tracking, and reliable data communications.

Proximity Solutions for Enterprises

ASSET TRACKING & LOCATING

FLEET MANAGEMENT

WORKER SAFETY

MULTI FACTOR AUTHENTICATION

ENVIRONMENTAL AWARENESS

Monitor and locate workers as they move about tracks and buildings. Small wearable devices with piezo alarms and bright LEDs can alert them when trains are on track or if they enter restricted areas.

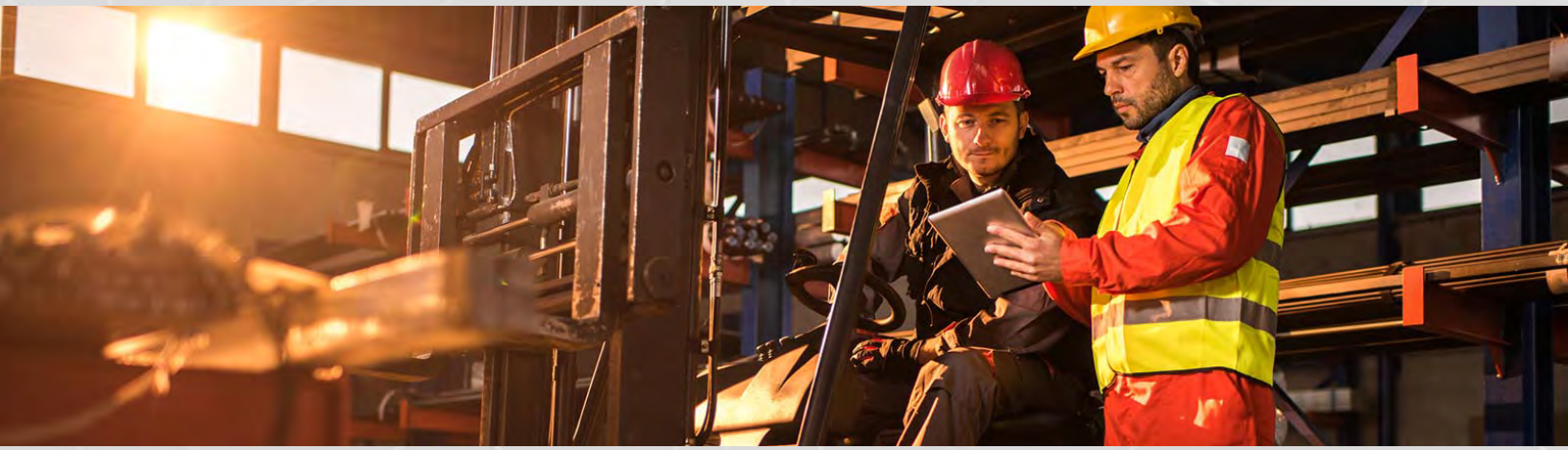

Advanced Technology & Benefits

REAL-TIME DATA | HIGH ACCURACY | LOW LATENCY | REDUCED SIGNAL INTERFERENCE | SECURE SIGNAL

UWB technology improves upon existing RTLS, geolocation, and Wi-Fi based services by providing greater precision down to 10cm.

Customized to Requirements

UWB/BLE SOLUTIONS | TAGS & BEACONS | ANCHORS & SENSORS | CLOUD-BASED PLATFORM | CUSTOM DEVELOPMENT & INTEGRATIONS

Choose from a variety of different form factors, weather casings and power options, or we can develop custom devices to meet your project's specific requirements.

Enhanced Transit Location System (ETLS)

Piper's Enhanced Transit Location System powers a new rail and vehicle tracking solution that can finally meet the real-time location awareness requirements of sophisticated

providing greater granularity and accuracy to within 10cm, reduced signal latency, added security, and minimal multipath interference. This makes our ETLS solution ideal for performing in restrictive locations and congested RF environments like underground subway tunnels.

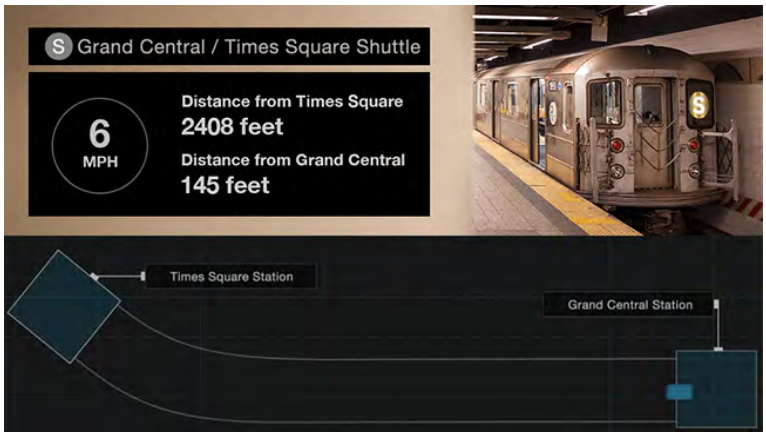

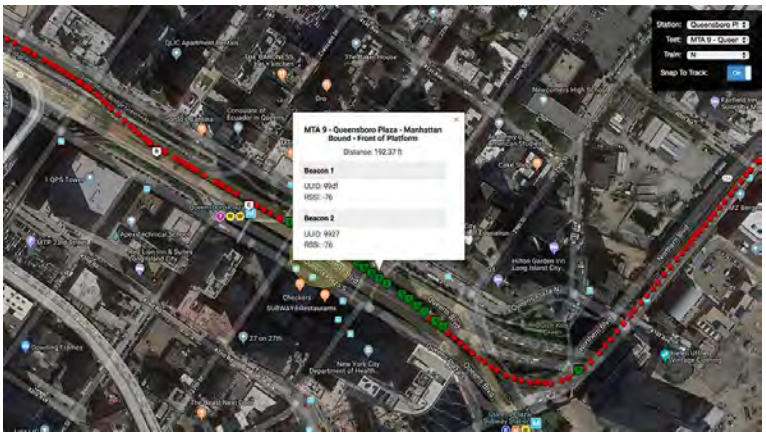

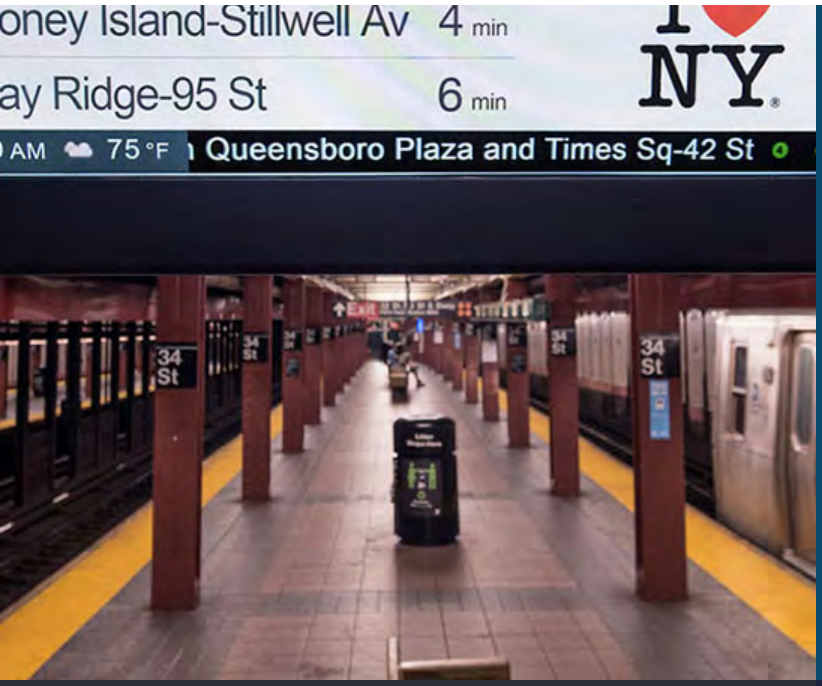

Featured Client - MTA

Piper is currently engaged in an ongoing project to assist Metropolitan Transit Authority (MTA) and the New York City Subway System with collecting real-time subway train location data. Using customized Ultra-Wideband and Bluetooth Low Energy technology installed on trains, in tunnels and underground stations, Piper aggregates a stream of real-time location data to help locate trains, predict arrivals and power countdown clocks.

KNOW MORE

Featured Industry - Airports

Piper's RTLS solutions track the location and movement of vehicles, equipment, people and other objects that must be identified in real-time for various location awareness needs, including fleet management and livery metering. Airports increasingly need these solutions to be customized so that

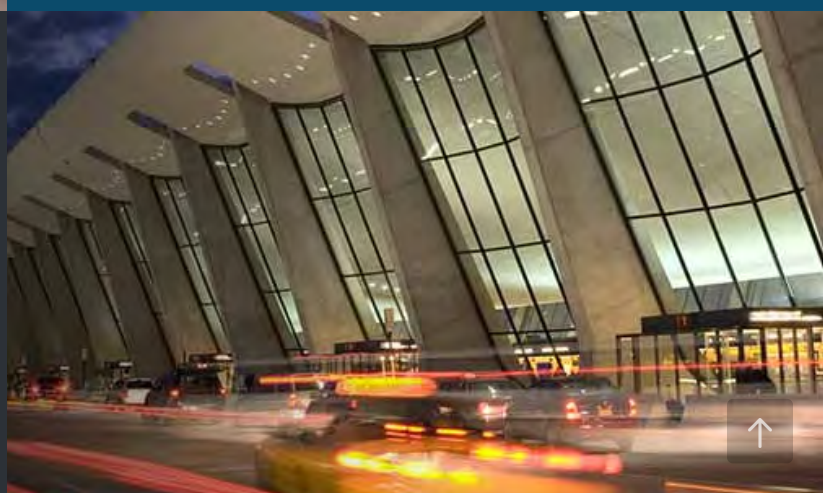

Get in Touch

Got any questions? Feel free to get in touch with us.
We would love to hear from you.

Your Name

Email

Phone Number

Message

Submit

Copyright © 2021 Piper