US007356639B2

(12) United States Patent
Perego et al.

(10) Patent No.: US 7,356,639 B2
(45) Date of Patent: *Apr. 8, 2008

(54) **CONFIGURABLE WIDTH BUFFERED MODULE HAVING A BYPASS CIRCUIT**

(75) Inventors: **Richard Perego**, Thornton, CO (US); **Fred Ware**, Los Altos Hills, CA (US); **Ely Tsern**, Los Altos, CA (US); **Craig Hampel**, Los Altos, CA (US)

(73) Assignee: **Rambus Inc.**, Los Altos, CA (US)

( * ) Notice: Subject to any disclaimer, the term of this patent is extended or adjusted under 35 U.S.C. 154(b) by 0 days.

This patent is subject to a terminal disclaimer.

(21) Appl. No.: **10/848,369**

(22) Filed: **May 18, 2004**

(65) **Prior Publication Data**

US 2004/0256638 A1 Dec. 23, 2004

**Related U.S. Application Data**

(63) Continuation-in-part of application No. 10/766,131, filed on Jan. 28, 2004, which is a continuation-in-part of application No. 10/272,024, filed on Oct. 15, 2002, which is a continuation of application No. 09/479,375, filed on Jan. 5, 2000, now Pat. No. 6,502,161.

(51) **Int. Cl.**
*G06F 12/00* (2006.01)

(52) **U.S. Cl.** ..... **711/5**; 711/105; 711/115

(58) **Field of Classification Search** ..... None
See application file for complete search history.

(56) **References Cited**

U.S. PATENT DOCUMENTS

4,621,339 A 11/1986 Wagner et al.

(Continued)

FOREIGN PATENT DOCUMENTS

EP 0 198 429 10/1986

(Continued)

OTHER PUBLICATIONS

Intel Developer Forum, "DDR2 Memory In 2004 Servers—Recipes For Successful Designs", Sep. 2003.

(Continued)

*Primary Examiner*—Kevin Verbrugge
(74) *Attorney, Agent, or Firm*—Vierra Magen Marcus & DeNiro LLP

(57) **ABSTRACT**

A memory system architecture/interconnect topology includes a configurable width buffered memory module having a configurable width buffer device with at least one bypass circuit. A buffer device, such as a configurable width buffer device, is positioned between or with at least one integrated circuit memory device positioned on a substrate surface of a memory module, such as a DIMM. The configurable width buffer device is coupled to at least one memory device (by way of an internal channel), entry pin and exit pin on the memory module. The configurable width buffer device includes a multiplexer/demultiplexer circuit coupled to the entry pin and the internal channel for accessing the memory device. A bypass circuit is coupled to the entry pin and the exit pin in order to allow information to be transferred through the memory module to another coupled memory module in the memory system by way of an external channel. In an alternate embodiment of the present invention, two bypass circuits are coupled to a pair of entry and exit pins. In an embodiment of the present invention, a memory system may include at least four interfaces, or sockets, for respective memory modules having configurable width buffer devices with bypass circuits that enable additional upgrade options while reducing memory system access delays.

**57 Claims, 30 Drawing Sheets**

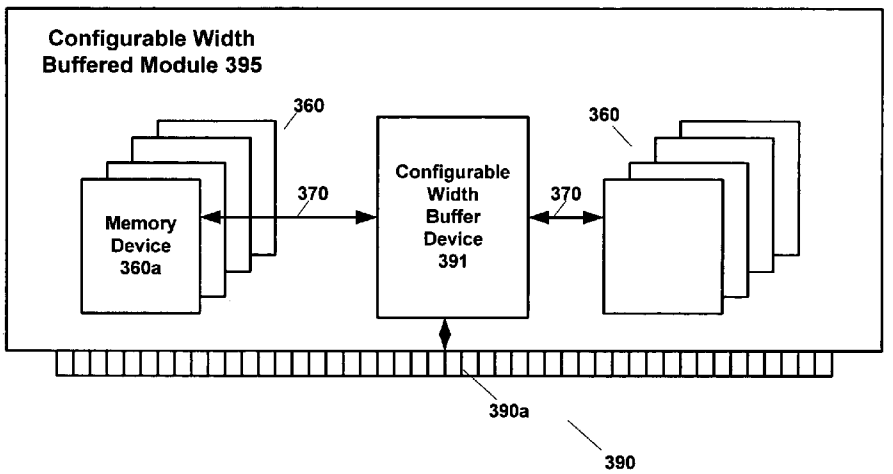

U.S. PATENT DOCUMENTS

| | | | | |
|---|---|---|---|---|
| 4,631,666 | A | 12/1986 | Harris et al. | |
| 4,644,532 | A | 2/1987 | George et al. | |
| 4,667,305 | A | 5/1987 | Dill et al. | |
| 4,747,070 | A | 5/1988 | Trottier et al. | |
| 4,747,100 | A | 5/1988 | Roach et al. | |
| 4,858,107 | A | 8/1989 | Fedele | |
| 4,864,563 | A | 9/1989 | Pavey et al. | |
| 4,947,257 | A * | 8/1990 | Fernandez et al. | 348/585 |
| 4,977,498 | A | 12/1990 | Rastegar et al. | |
| 5,034,917 | A | 7/1991 | Bland et al. | |
| 5,068,650 | A * | 11/1991 | Fernandez et al. | 345/547 |
| 5,228,132 | A * | 7/1993 | Neal et al. | 711/5 |
| 5,228,134 | A | 7/1993 | MacWilliams et al. | |
| 5,283,877 | A | 2/1994 | Gastinel et al. | |
| 5,325,493 | A | 6/1994 | Herrell et al. | |
| 5,355,467 | A | 10/1994 | MacWilliams et al. | |
| 5,371,880 | A | 12/1994 | Bhattacharya | |
| 5,400,360 | A | 3/1995 | Richards et al. | |
| 5,408,646 | A | 4/1995 | Olnowich et al. | |
| 5,475,818 | A | 12/1995 | Molyneaux et al. | |
| 5,511,224 | A | 4/1996 | Tran et al. | |
| 5,513,135 | A * | 4/1996 | Dell et al. | 365/52 |
| 5,513,377 | A | 4/1996 | Capowski et al. | |
| 5,537,394 | A | 7/1996 | Abe et al. | |
| 5,544,342 | A | 8/1996 | Dean | |
| 5,553,266 | A | 9/1996 | Metzger et al. | |
| 5,557,266 | A | 9/1996 | Calvignac et al. | |
| 5,574,945 | A | 11/1996 | Elko et al. | |
| 5,602,780 | A | 2/1997 | Diem et al. | |
| 5,604,735 | A | 2/1997 | Levinson et al. | |
| 5,630,095 | A | 5/1997 | Snyder | |
| 5,642,444 | A | 6/1997 | Mostafavi | |
| 5,655,113 | A | 8/1997 | Leung et al. | |
| 5,659,710 | A | 8/1997 | Sherman et al. | |
| 5,701,313 | A * | 12/1997 | Purdham | 714/764 |
| 5,742,840 | A | 4/1998 | Hansen et al. | |
| 5,748,872 | A | 5/1998 | Norman | |
| 5,787,083 | A | 7/1998 | Iwamoto et al. | |
| 5,802,054 | A | 9/1998 | Bellenger | |
| 5,802,565 | A | 9/1998 | McBride et al. | |
| 5,805,798 | A | 9/1998 | Kearns et al. | |
| 5,838,985 | A | 11/1998 | Ohki | |
| 5,848,145 | A | 12/1998 | Gallagher et al. | |
| 5,860,080 | A | 1/1999 | James et al. | |
| 5,867,180 | A | 2/1999 | Katayama et al. | |
| 5,867,422 | A | 2/1999 | John | |
| 5,883,839 | A | 3/1999 | Tosaka et al. | |
| 5,884,036 | A | 3/1999 | Haley | |
| 5,893,921 | A | 4/1999 | Bucher et al. | |
| 5,898,863 | A | 4/1999 | Ofer et al. | |
| 5,900,017 | A | 5/1999 | Genduso et al. | |
| 5,901,294 | A | 5/1999 | Tran et al. | |
| 5,911,052 | A | 6/1999 | Singhal et al. | |
| 5,913,044 | A | 6/1999 | Tran et al. | |
| 5,917,760 | A | 6/1999 | Millar | |
| 5,923,893 | A | 7/1999 | Moyer et al. | |
| 5,926,839 | A | 7/1999 | Katayama | |
| 5,953,215 | A | 9/1999 | Karabatsos | |
| 5,982,238 | A | 11/1999 | Soderquist | |
| 6,006,318 | A | 12/1999 | Hansen et al. | |
| 6,016,282 | A | 1/2000 | Keeth | |
| 6,034,878 | A | 3/2000 | Osaka et al. | |
| 6,038,682 | A | 3/2000 | Norman | |
| 6,065,092 | A | 5/2000 | Roy | |
| 6,092,229 | A | 7/2000 | Boyle et al. | |
| 6,104,417 | A | 8/2000 | Nielsen et al. | |
| 6,108,731 | A * | 8/2000 | Suzuki et al. | 710/301 |
| 6,125,419 | A | 9/2000 | Umemura et al. | |
| 6,142,830 | A | 11/2000 | Loeffler | |
| 6,151,648 | A | 11/2000 | Haq | |
| 6,154,826 | A | 11/2000 | Wulf et al. | |
| 6,154,855 | A | 11/2000 | Norman | |
| 6,160,423 | A | 12/2000 | Haq | |
| 6,185,644 | B1 | 2/2001 | Farmwald et al. | |
| 6,185,654 | B1 * | 2/2001 | Van Doren | 711/5 |
| 6,208,273 | B1 | 3/2001 | Dye et al. | |
| 6,247,100 | B1 | 6/2001 | Drehmel et al. | |
| 6,255,859 | B1 | 7/2001 | Haq | |
| 6,263,413 | B1 | 7/2001 | Motomura et al. | |
| 6,266,252 | B1 | 7/2001 | Karabatsos | |
| 6,272,609 | B1 | 8/2001 | Jeddeloh | |
| 6,276,844 | B1 | 8/2001 | Coteus et al. | |
| 6,292,877 | B1 | 9/2001 | Ryan | |
| 6,317,352 | B1 | 11/2001 | Halbert et al. | |
| 6,327,205 | B1 | 12/2001 | Haq | |
| 6,330,687 | B1 | 12/2001 | Griffith | |
| 6,345,321 | B1 | 2/2002 | Litaize et al. | |
| 6,369,605 | B1 | 4/2002 | Bonella et al. | |
| 6,408,402 | B1 | 6/2002 | Norman | |
| 6,414,904 | B2 | 7/2002 | So et al. | |
| 6,425,064 | B2 | 7/2002 | Soderquist | |
| 6,434,035 | B2 | 8/2002 | Miersch et al. | |
| 6,446,158 | B1 | 9/2002 | Karabatsos | |
| 6,449,213 | B1 | 9/2002 | Dodd et al. | |
| 6,449,679 | B2 | 9/2002 | Ryan | |
| 6,449,703 | B2 | 9/2002 | Jeddeloh | |
| 6,449,727 | B1 | 9/2002 | Toda | |
| 6,477,592 | B1 | 11/2002 | Chen et al. | |
| 6,477,614 | B1 | 11/2002 | Leddige et al. | |
| 6,480,409 | B2 | 11/2002 | Park et al. | |
| 6,480,927 | B1 | 11/2002 | Bauman | |
| 6,487,102 | B1 | 11/2002 | Halbert et al. | |
| 6,493,250 | B2 | 12/2002 | Halbert et al. | |
| 6,502,161 | B1 | 12/2002 | Perego et al. | |
| 6,510,503 | B2 | 1/2003 | Gillingham et al. | |
| 6,513,080 | B1 | 1/2003 | Haq | |
| 6,513,091 | B1 | 1/2003 | Blackmon et al. | |
| 6,526,469 | B1 | 2/2003 | Drehmel et al. | |
| 6,530,006 | B1 | 3/2003 | Dodd et al. | |
| 6,530,033 | B1 * | 3/2003 | Raynham et al. | 714/5 |
| 6,553,450 | B1 | 4/2003 | Dodd et al. | |
| 6,557,069 | B1 | 4/2003 | Drehmel et al. | |
| 6,587,912 | B2 | 7/2003 | Leddige et al. | |
| 6,604,180 | B2 | 8/2003 | Jeddeloh | |
| 6,622,224 | B1 | 9/2003 | Cloud | |
| 6,625,687 | B1 | 9/2003 | Halbert et al. | |
| 6,633,947 | B1 | 10/2003 | Holman et al. | |
| 6,639,820 | B1 | 10/2003 | Khandekar et al. | |
| 6,643,752 | B1 | 11/2003 | Donnelly et al. | |
| 6,690,191 | B2 | 2/2004 | Wu et al. | |
| 6,690,726 | B1 | 2/2004 | Yavits et al. | |
| 6,708,248 | B1 | 3/2004 | Garrett, Jr. et al. | |
| 6,820,163 | B1 | 11/2004 | McCall et al. | |
| 6,853,938 | B2 | 2/2005 | Jeddeloh | |
| 6,854,042 | B1 | 2/2005 | Karabatsos | |
| 6,877,079 | B2 | 4/2005 | Yoo et al. | |
| 6,889,284 | B1 | 5/2005 | Nizar et al. | |
| 6,968,419 | B1 * | 11/2005 | Holman | 711/5 |
| 6,970,968 | B1 * | 11/2005 | Holman | 711/5 |
| 7,007,130 | B1 * | 2/2006 | Holman | 711/5 |
| 7,110,400 | B2 | 9/2006 | Hronik | |
| 2001/0039606 | A1 | 11/2001 | Jeddeloh | |
| 2002/0083287 | A1 | 6/2002 | Zumkehr et al. | |
| 2002/0112119 | A1 | 8/2002 | Halbert et al. | |
| 2002/0124153 | A1 | 9/2002 | Litaize et al. | |
| 2002/0144071 | A1 | 10/2002 | Williams et al. | |
| 2002/0184462 | A1 | 12/2002 | Jeddeloh | |
| 2003/0012229 | A1 | 1/2003 | Braun | |
| 2003/0018880 | A1 | 1/2003 | Litaize et al. | |
| 2003/0074490 | A1 | 4/2003 | Pochmuller | |
| 2003/0120895 | A1 | 6/2003 | Litaize et al. | |
| 2003/0177313 | A1 | 9/2003 | Iyer et al. | |
| 2004/0015650 | A1 | 1/2004 | Zumkehr et al. | |
| 2004/0095838 | A1 | 5/2004 | Li | |

| | | | | |
|---|---|---|---|---|
| 2004/0145935 | A1 | 7/2004 | Jakobs | |
| 2004/0246767 | A1 | 12/2004 | Vogt | |
| 2004/0246785 | A1 | 12/2004 | Vogt | |
| 2004/0246786 | A1 | 12/2004 | Vogt | |
| 2004/0250024 | A1* | 12/2004 | Vogt | 711/131 |
| 2004/0250153 | A1 | 12/2004 | Vogt | |
| 2004/0250181 | A1 | 12/2004 | Vogt et al. | |
| 2004/0260991 | A1 | 12/2004 | Vogt et al. | |
| 2004/0267481 | A1 | 12/2004 | Resnick | |

FOREIGN PATENT DOCUMENTS

| | | | |
|---|---|---|---|
| EP | 0 282 070 | B1 | 8/1994 |
| EP | 0 811 916 | A2 | 12/1997 |
| EP | 1069509 | A2 | 1/2001 |
| GB | 2 383 656 | A | 7/2003 |
| WO | WO 99/30240 | | 6/1999 |
| WO | WO99/30240 | | 6/1999 |
| WO | WO 99/41666 | | 8/1999 |
| WO | WO99/41666 | | 8/1999 |
| WO | WO 99/41667 | | 8/1999 |
| WO | WO99/41667 | | 8/1999 |
| WO | WO 2004/111856 | | 12/2004 |

OTHER PUBLICATIONS

QBM Alliance, Platform Conference, Quad Band Memory (QBM tm): DDR 200/266/333 devices producing DDR400/533/667, Jan. 23-24, 2002.
Karabatsos, C., "Quad Band Memory (QBM) Technology", Kentron Technologies, Inc., Apr. 2001.
Quad Band Memory (QBM), "The 'QBM Enabled' VIA PT880/PM880 Chipset Solutions with the Fastest Memory".
Weber, F., "The AMD Athlon Processor: Future Directions", AMD.
"Intel 82804AA Memory Repeater Hub for SDRAM (MRH-S) Datasheet", Intel Corp., pp. 2-48 (Nov. 1999).
"Intel 82805AA Memory Translater Hub (MTH) Datasheet", Intel Corp., pp. 1-48 (Nov. 1999).
Cataldo, A., "TI Fields DSP-Based Media Processor on a DIMM", EE Times (Jan. 2000).
Mac Williams, P., "PC Memory Directions For 1999 and Beyond", Intel Developer Forum, pp. 1-10 (Sep. 1998).
Johnson, B., "Direct RDRAM Basic Architecture and Program Overview", Intel Developer Forum, pp. 1-14 (Sep. 1998).
Gillingham, P., "SLDRAM Architectural and Functional Overview", SLDRAM Consortium, SLDRAM Inc., pp. 1-14 (Aug. 1997).
"Draft Standard for a High-Speed Memory Interface (Synclink)", Draft 0.99 IEEE P1596.7-199X, IEEE Inc., pp. 1-51 (1996).
Wiggers, H., "SyncLink A Proposal for an Implementation of IEEE P1596.4", Hewlett Packard, pp. 1-20 (Mar. 1995).
"KMM377S1620CT2 SDRAM Module Datasheet", Samsung Electronics Inc., pp. 1-2 (Nov. 1998).
"SLD4M18DR400 4MEG×18 SLDRAM Datasheet", SLDRAM Inc., pp. 1-69 (Jul. 1998).
Poulton, J., "Signaling in High Performance Memory Systems", IEEE Solid State Circuits Conference, slides 1-59 (Feb. 1999).
"SLDRAM 400Mb/s/pin Command/Address Repeater", SLD10400 Rev .5, SLDRAM Consortium, pp. 1-12 (Jan. 7, 1998).
Minutes of meeting No. 75 JEDEC JC-42.3 Committee on RAM Memories, and referenced attachment "Y" of the presentation titled "SyncLink", May 24, 1995, New Orleans.
Intel Developer Forum, "Fully Buffered DIMM (FB-DIMM) Server Memory Architecture: Capacity, Performance, Reliability, and Longevity", Feb. 18, 2004.
Intel Developer Forum, "Fully Buffered DIMM (FB-DIMM) Design Considerations", Feb. 18, 2004.
Jeddeloh, Joe, "Fully Buffered DIMM (FB-DIMM)", Advanced Systems Technology, Micron Technology, Inc. Apr. 15-16, 2004.
IEEE Standard for Scalable Coherent Interface (SCI), "Microprocessor and Microcomputer Standards Subcommittee of the IEEE Computer Society", IEEE Std 1596-1992.
SCI, "P1596: SCI, A Scalable Coherent Interface", Nov. 28, 1988.
Gustavson et al., DRAFT "The Scalable Coherent Interface Project (SuperBus)", SCI, Aug. 22, 1988, Rev. 14.
Schanke, "Proposal for Clock Distribution in SCI", SCI, May 5, 1989.
James, "Scalable I/O Architecture for Buses", COMPCON Spring 1989, SCI, Nov. 28, 1988.
Volz et al., "Position Paper On Global Clock For the Futurebus +", SCI, 1989.
Kristiansen et al., "Scalable Coherent Interface", to appear in Eurobus Conference Proceedings, May 1989.
PCT International Search Report (Jun. 27, 2001) 4 pages.
Microsoft Press Computer Dictionary, 3rd Ed., 1997, pp. 48 and 68.
Gustavson et al., "Macintosh HD:Desktop Folder:SLDRAMrepeaterConcerns", Sunday, Nov. 23, 1997, 4 pages.
U.S. Appl. No. 10/713,868, filed Nov. 14, 2003 by Pete D. Vogt.
U.S. Appl. No. 10/714,025, filed Nov. 14, 2003 by Pete D. Vogt.
U.S. Appl. No. 10/714,026, filed Nov. 14, 2003 by Pete D. Vogt.
U.S. Appl. No. 10/883,474, filed Jun. 30, 2004 by Pete D. Vogt.
U.S. Appl. No. 10/882,999, filed Jun. 30, 2004 by Pete D. Vogt.
U.S. Appl. No. 10/859,438, filed May 31, 2004 by Pete D. Vogt.
U.S. Appl. No. 10/858,850, filed May 31, 2004 by Pete D. Vogt.
U.S. Appl. No. 10/859,060, filed May 31, 2004 by Pete D. Vogt.
Ng, R. (Sun Microsystems Inc.), "Fast computer memories", IEEE Spectrum, Oct. 1992, pp. 36-39.
Salters, R.H.W. (Philips Research Laboratories), "Fast DRAMS for sharper TV", IEEE Spectrum, Oct. 1992, pp. 40-42.
Jones, F (United Memories, Inc.), "A new era of fast dynamic RAMs", IEEE Spectrum, Oct. 1992, pp. 43-49.
Farmwald, M. et al. (Rambus Inc.), "A fast path to one memory", IEEE Spectrum, Oct. 1992, pp. 50-51.
Gjessing, S. (University of Oslo), Gustavson, D.B. (Stanford Linear Accelerator Center), James, D. et al. (Apple Computer Inc.), Wigger, H. (Hewlett-Packard Co.), "A RAM link for high speed", IEEE Spectrum, Oct. 1992, pp. 52-53.
The Institute of Electrical and Electronics Engineering , Inc., "IEEE Standard for High-Bandwidth Memory Interface Based on Scalable Coherent Interface (SCI) Signaling Technology (RamLink)", 1996, pp. 1-91.
JEDEC Standard No. 21-C, pp. 4.20.4-1 through 4.20.4-69, 4.20.4-184 PIN, PC1600/2100 DDR SDRAM Registered DIMM Design Specificationm, Revision 1.2.
MICRON, 240-Pin 256MB, 512MB, 1GB DDR2 SDRAM FBDIMM (SR, FB×72) Features, Micron Technology, Inc., 2004, pp. 1-36.
Micron, 256MB, 512MB, 1GB: (×72, ECC, DR) 168-Pin SDRAM RDIMM, Synchronous DRAM Module, Micron Technology, Inc., 2001, pp. 1-28.
Lizy Kurian John, "VaWiRAM: A Variable Width Random Access Memory Module", 9th International Conference on VLSI Design, Jan. 1996, pp. 219-224, 1995 IEEE.
A. Cataldo "TI fields DSP-Based Media Processor on a DIMM", EE Times (Jan. 2000).
P. Mac Williams, "PC Memory Directions For 1999 and Beyond", Intel Developer Forum, pp. 1-10, (Sep. 1998).
B Johnson, "Direct RDRAM Basic Architecture and Program Overview", Intel Developer Forum, pp. 1-14, (Sep. 1998).
P. Gillingham, "SLDRAM Architectural and Functional Overview", SLDRAM Consortium, SLDRAM Inc., pp. 1-14, (Aug. 1997).
"Draft Standard For a High-Speed Memory Interface (Synclink)", Draft 0.99 IEEE P1596.7-199X, IEEE Inc. (1996), pp. 1-51.
H. Wiggers, "SyncLink A Proposal for an Implementation of IEEE P1596.4", Hewlett Packard, Mar. 1995, pp. 1-20.
"SLD4M18DR400 4MEG×18 SLDRAM Datasheet", SLDRAM Inc., pp. 1-69, (Jul. 98).
J. Poulton, "Signaling in High Performance Memory Systems", IEEE Solid State Circuits Conference, slides 1-59, (Feb. 1999).
Joe Jeddeloh, "Fully Buffered DIMM (FB-DIMM)", Advanced Systems Technology, Micron Technology, Inc., Conference Apr. 15-16, 2004.
European Search Report in EP05001769.

Request for Declaration of Interference, filed on Apr. 13, 2006 in U.S. Appl. No. 11/203,652 to Drehmel et al., including exhibits A through K.
Jerry D. Gibson, Editor-in-Chief, "The Mobile Communications Handbook," copyright 1996 CRC Press, Inc., p. 24.
G. Doettling et al., "S/390 Parallel Enterprise Server Generation 3: A Balanced System and Cache Structure," IBM J. Res. Develop., vol. 41 (No. 4/5), Jul./Sep. 1997, pp. 405-428.
JEDEC Standard - "FBDIMM Specification: High Speed Differential PTP Link at 1.5V," JESDS-18, Sep. 2006, available at "http://www.jedec.org/download/search/JESD8-18.pdf".
Excel Spreadsheet, entitled "Patents.xls," available at "http://www.jedec.org/download/search/FBDIMM/patents.xls".
"Patentica" letter, dated Dec. 18, 2004, 4 pages, referenced in Excel Spreadsheet, entitled "Patent.xls.".
"Kentron" letter, dated Jan. 23, 2006, 1 page, referenced in Excel Spreadsheet, entitled "Patents.xls.".
"Wintec" letter, dated Mar. 19, 2003, 1 page, referenced in Excel Spreadsheet, entitled "Patents.xls.".
"Wintec" letter, dated Apr. 2, 2003, 1 page, referenced in Excel Spreadsheet, entitled "Patents.xls.".
"AMD" letter, dated Apr. 12, 2004, 1 page, referenced in Excel Spreadsheet, entitled "Patents.xls.".
"Micron" letter, dated Dec. 2, 2003, 3 pages, referenced in Excel Spreadsheet, entitled "Patents.xls.".
"Micron" letter, dated Sep. 16, 2005, 1 page, referenced in Excel Spreadsheet, entitled "Patents.xls.".
"Inphi" letter, dated Mar. 3, 2005, 1 page, referenced in Excel Spreadsheet, entitled "Patents.xls.".
"Inphi" letter, dated Jun. 6, 2005, 1 page, referenced in Excel Spreadsheet, entitled "Patents.xls.".
"Samsung" letter, dated Oct. 25, 2004, 1 page, referenced in Excel Spreadsheet, entitled "Patents.xls.".
European Search Report in EP05001769.
Communication from European Patent Office dated Mar. 9, 2007.
International Search Report in PCT/US05/17066, mailed Nov. 2, 2005.

* cited by examiner

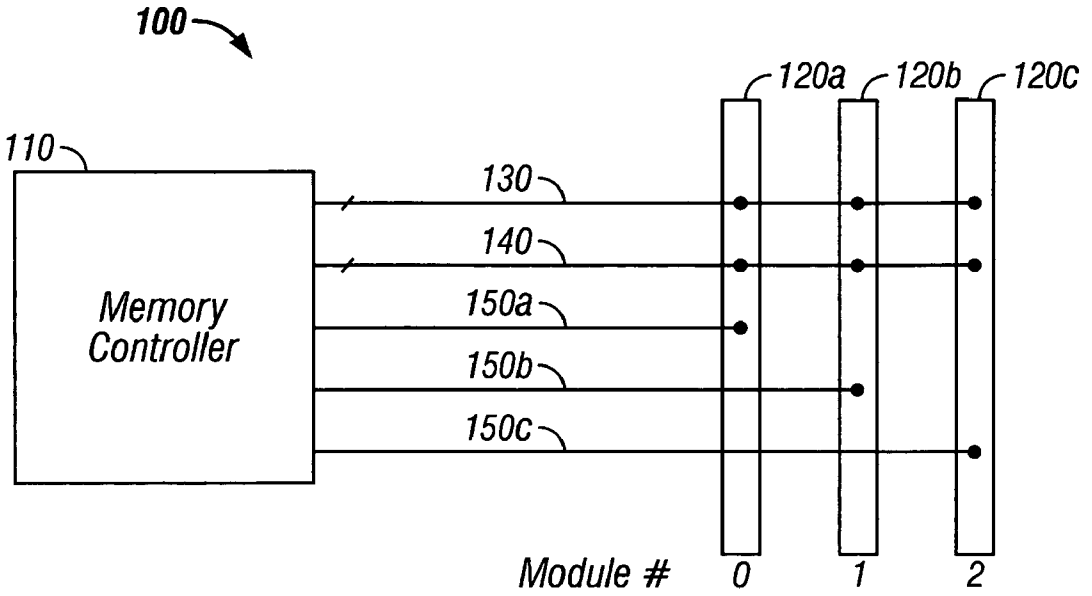


FIG. 1
(Prior Art)

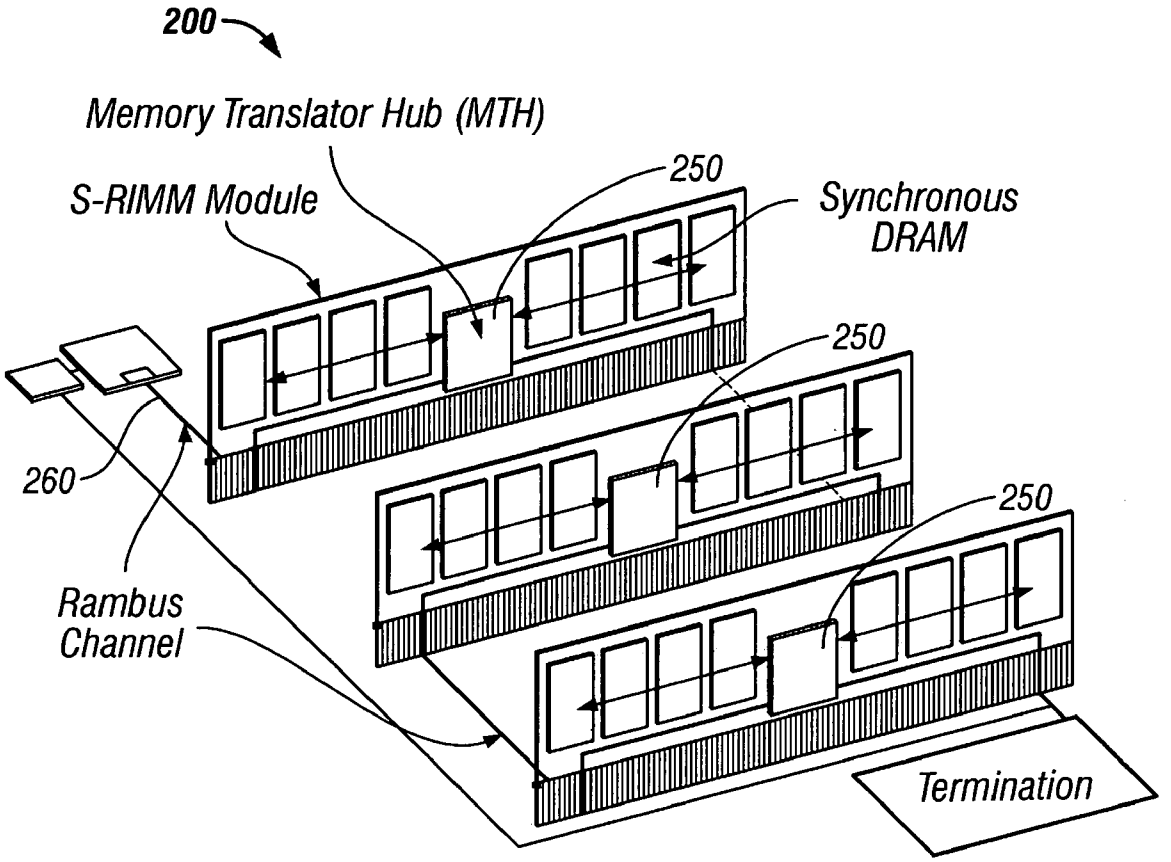


FIG. 2A
(Prior Art)

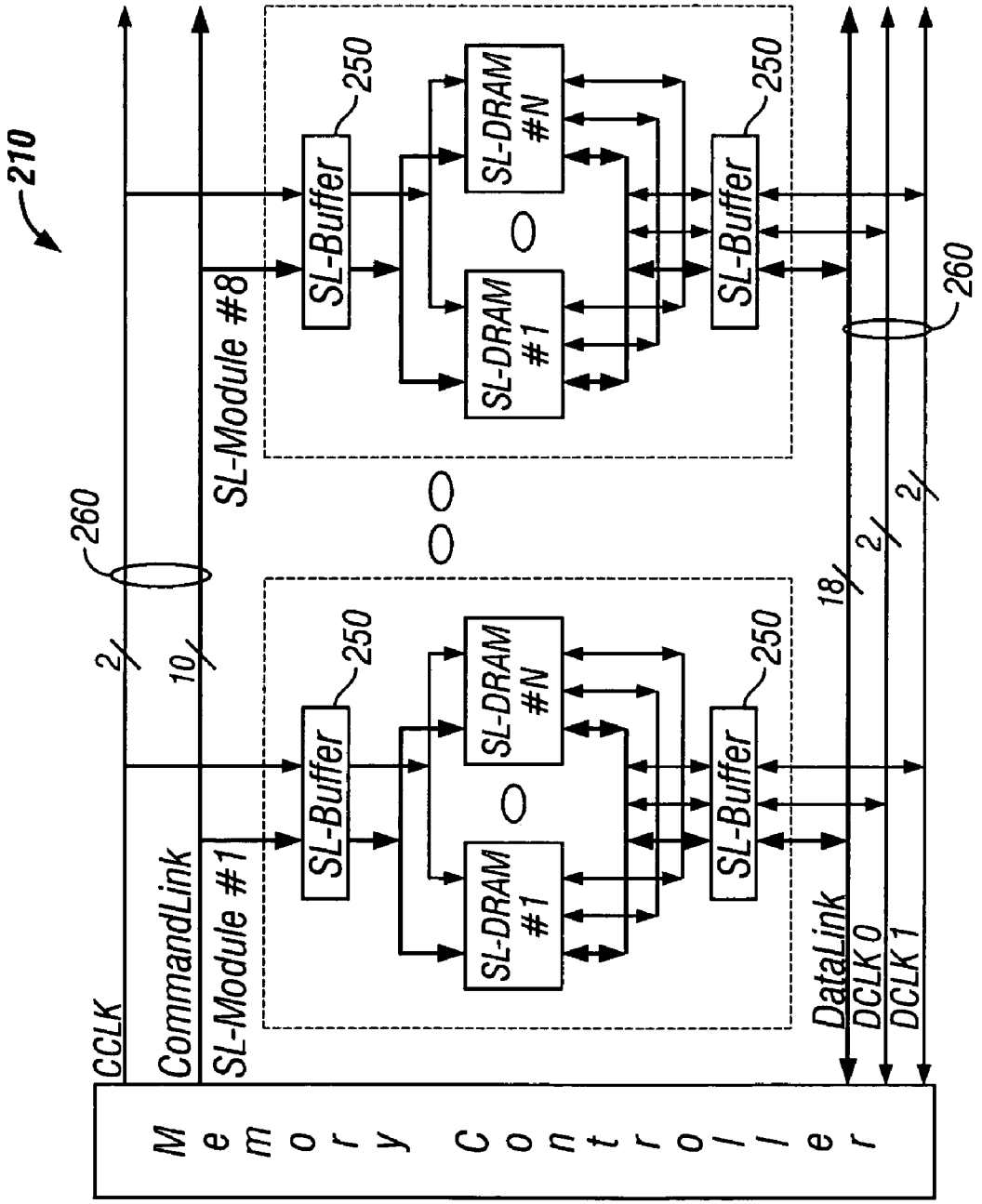


FIG. 2B
(Prior Art)

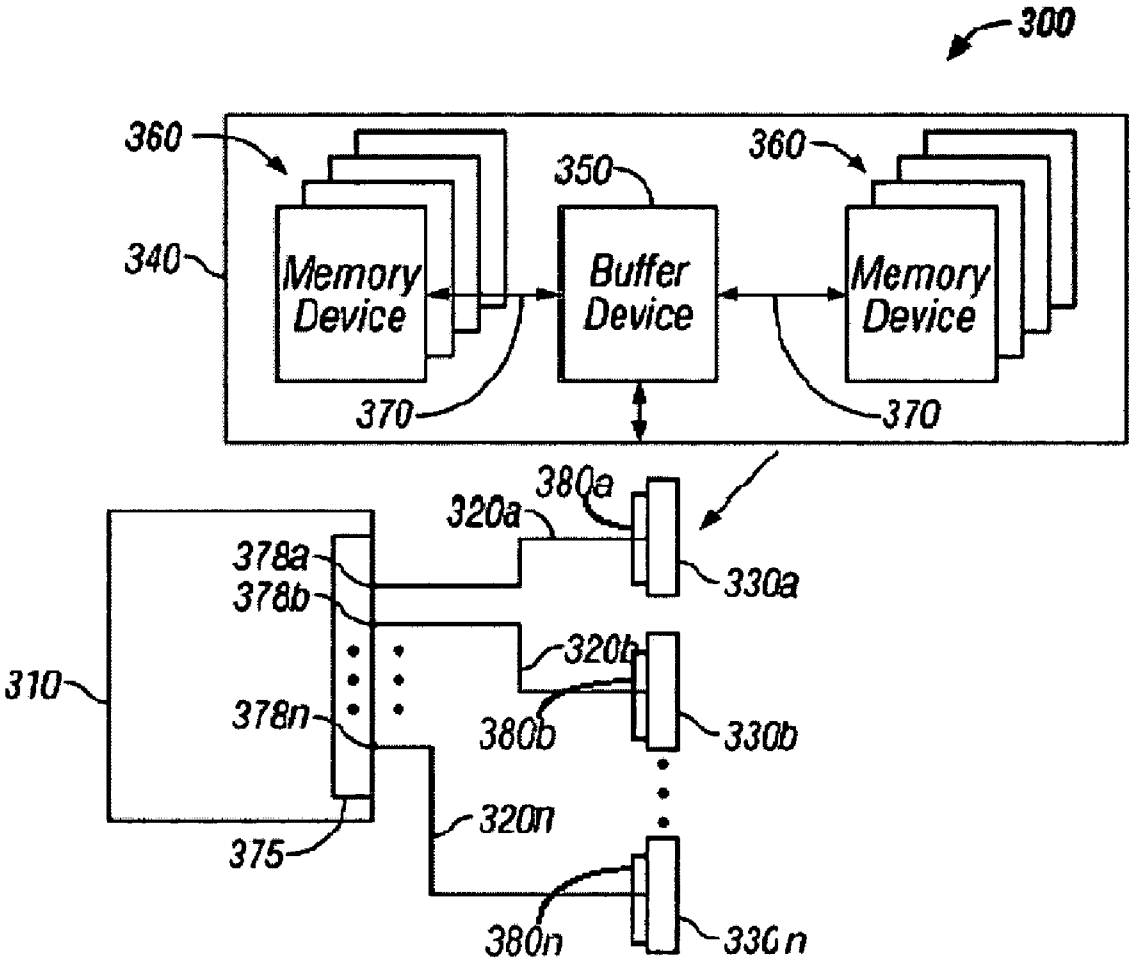
300
360
350
360
340
Memory Device
Buffer Device
Memory Device
370
370
380a
320a
330a
378a
378b
320b
310
378n
380b
330b
320n
375
380n
330n

FIG. 3A

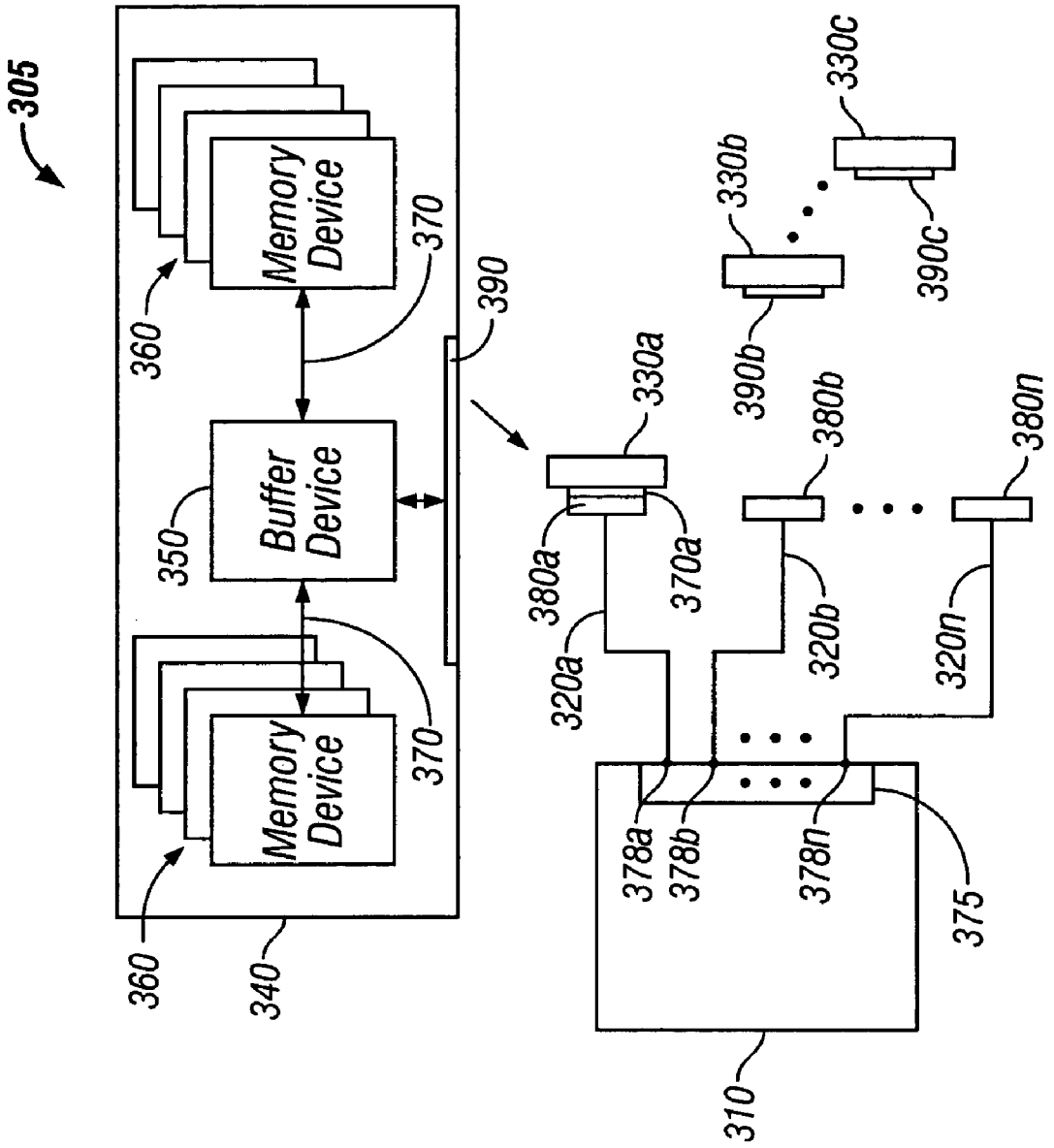
305
Memory Device
Buffer Device
Memory Device
360
350
370
370
360
340
390
330a
330b
330c
390b
390c
380a
380b
380n
370a
320a
320b
320n
378a
378b
378n
375
310

FIG. 3B

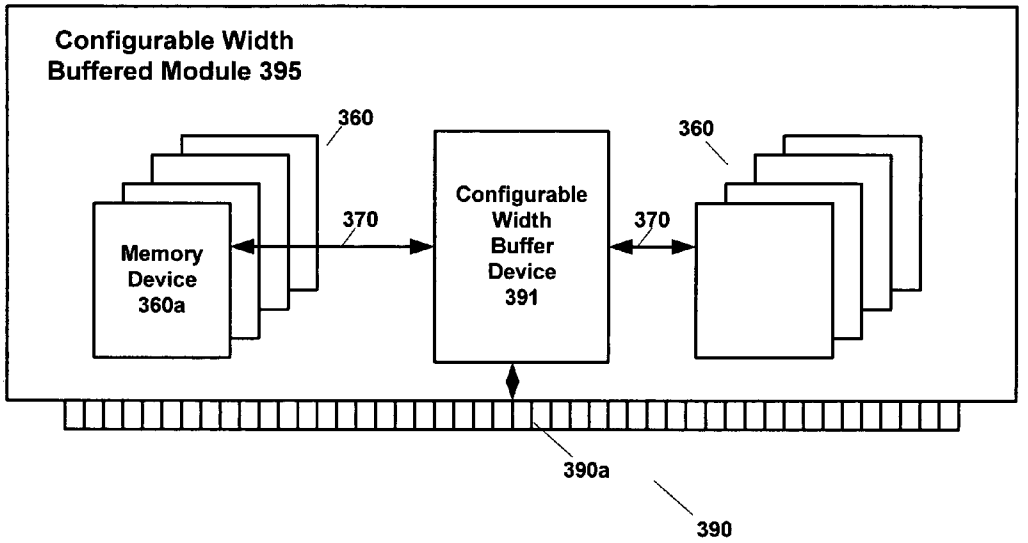
Configurable Width
Buffered Module 395
360
360
370
370
Memory
Device
360a
Configurable
Width
Buffer
Device
391
390a
390

Fig. 3C

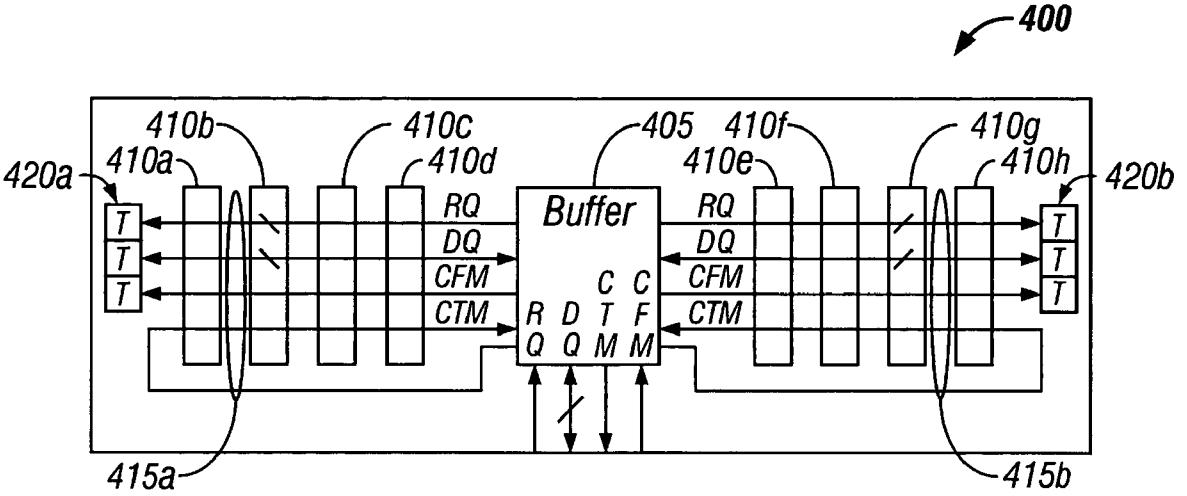
400
410b
410c
405
410f
410g
420a
410a
410d
410e
410h
420b
Buffer
RQ
DQ
CFM
CTM
T
415a
415b

FIG. 4A

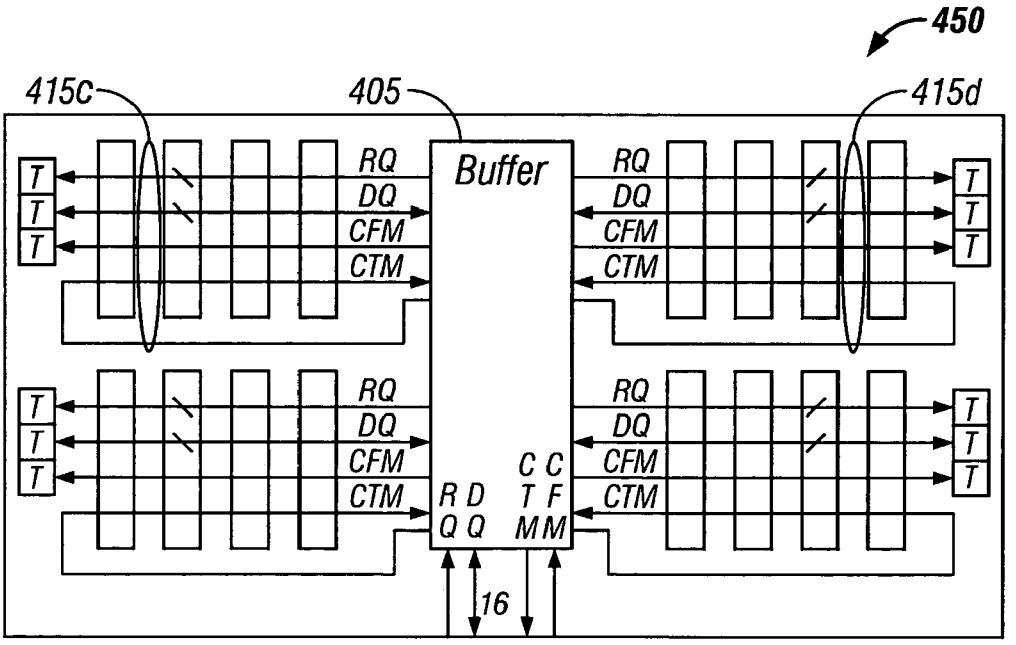
450
415c
405
415d
Buffer
RQ
DQ
CFM
CTM
T
16

FIG. 4B

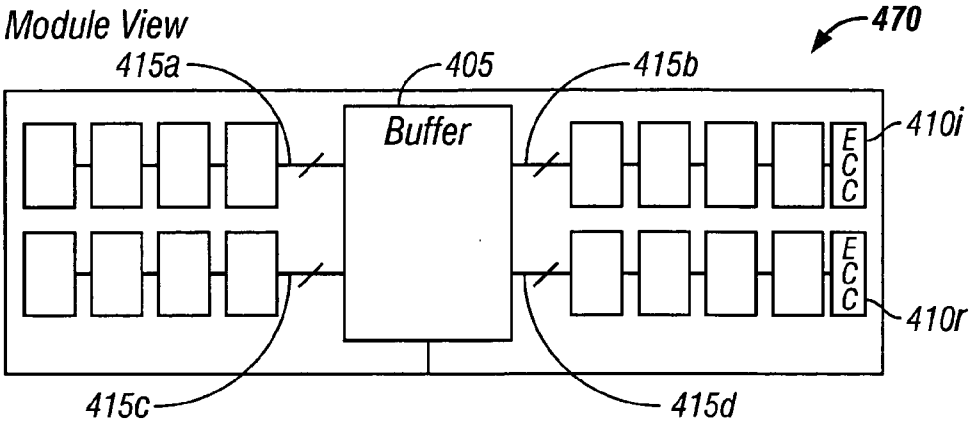
Module View
470
415a
405
415b
Buffer
410i
ECC
ECC
410r
415c
415d

FIG. 4C

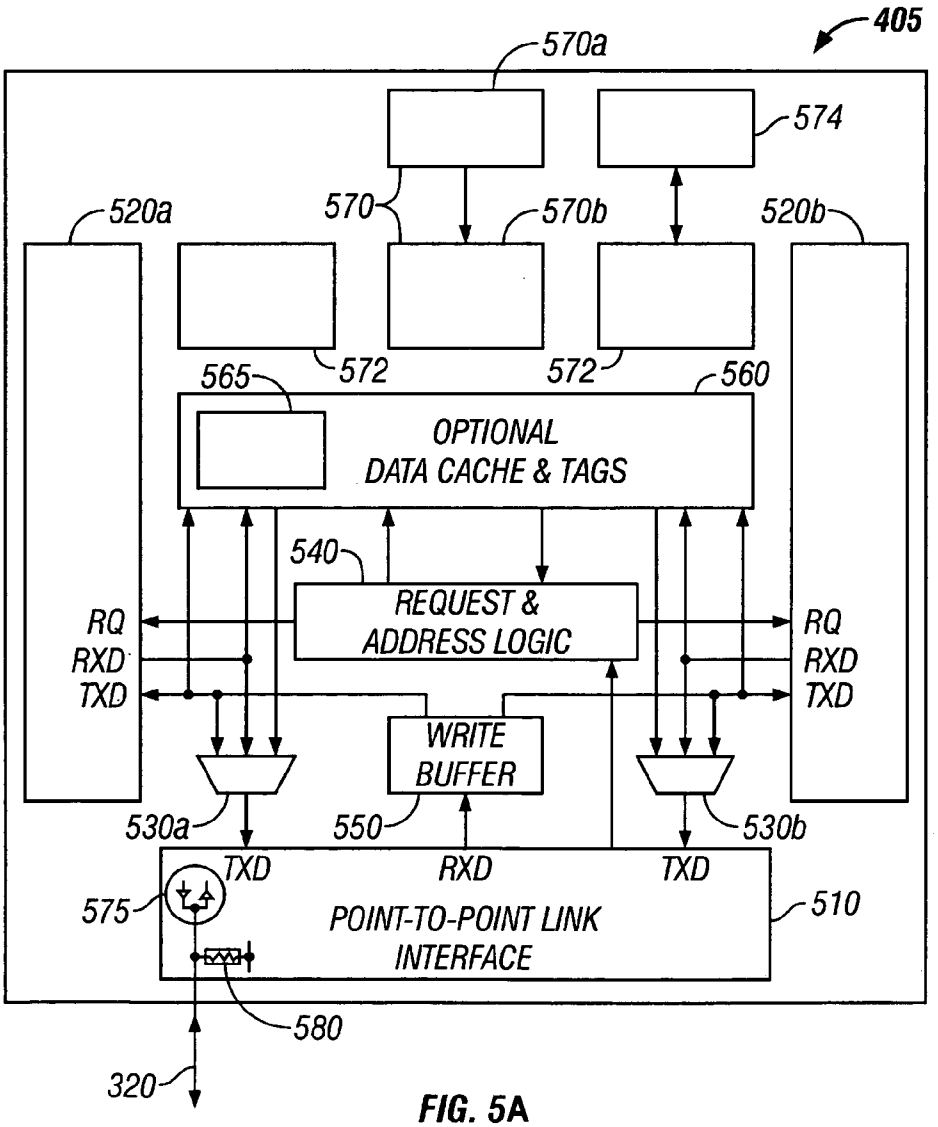
405
570a
574
520a
570
570b
520b
572
572
565
560
OPTIONAL
DATA CACHE & TAGS
540
REQUEST &
ADDRESS LOGIC
RQ
RXD
TXD
RQ
RXD
TXD
WRITE
BUFFER
530a
550
530b
TXD
RXD
TXD
575
POINT-TO-POINT LINK
INTERFACE
510
580
320

FIG. 5A

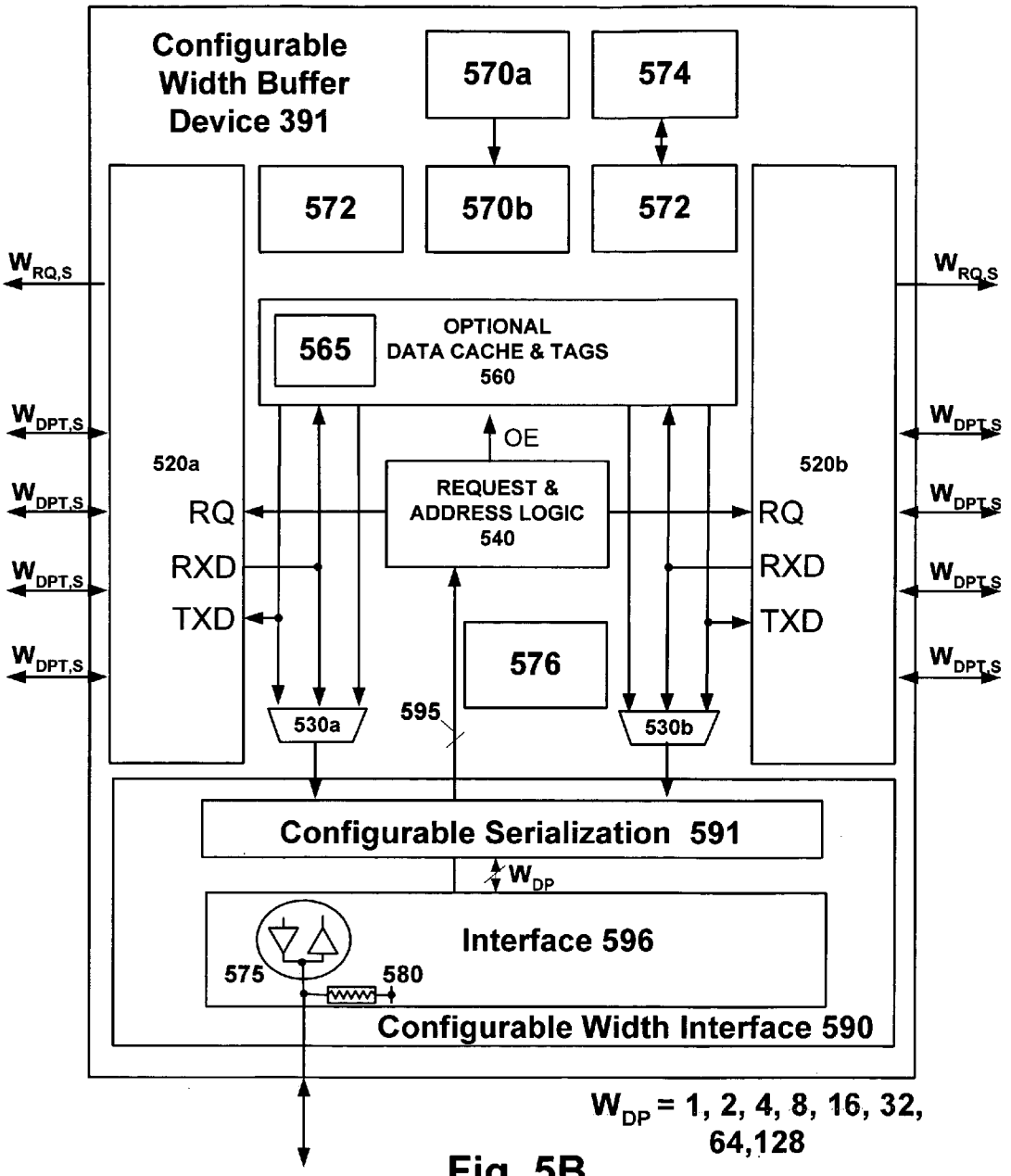
Configurable Width Buffer Device 391
570a
574
572
570b
572
$W_{RQ,S}$
$W_{RQ,S}$
565
OPTIONAL DATA CACHE & TAGS 560
$W_{DPT,S}$
$W_{DPT,S}$
$W_{DPT,S}$
$W_{DPT,S}$
$W_{DPT,S}$
$W_{DPT,S}$
$W_{DPT,S}$
$W_{DPT,S}$
520a
520b
OE
REQUEST & ADDRESS LOGIC 540
RQ
RXD
TXD
RQ
RXD
TXD
576
595
530a
530b
Configurable Serialization 591
$W_{DP}$
Interface 596
575
580
Configurable Width Interface 590
$W_{DP}$ = 1, 2, 4, 8, 16, 32, 64,128

Fig. 5B

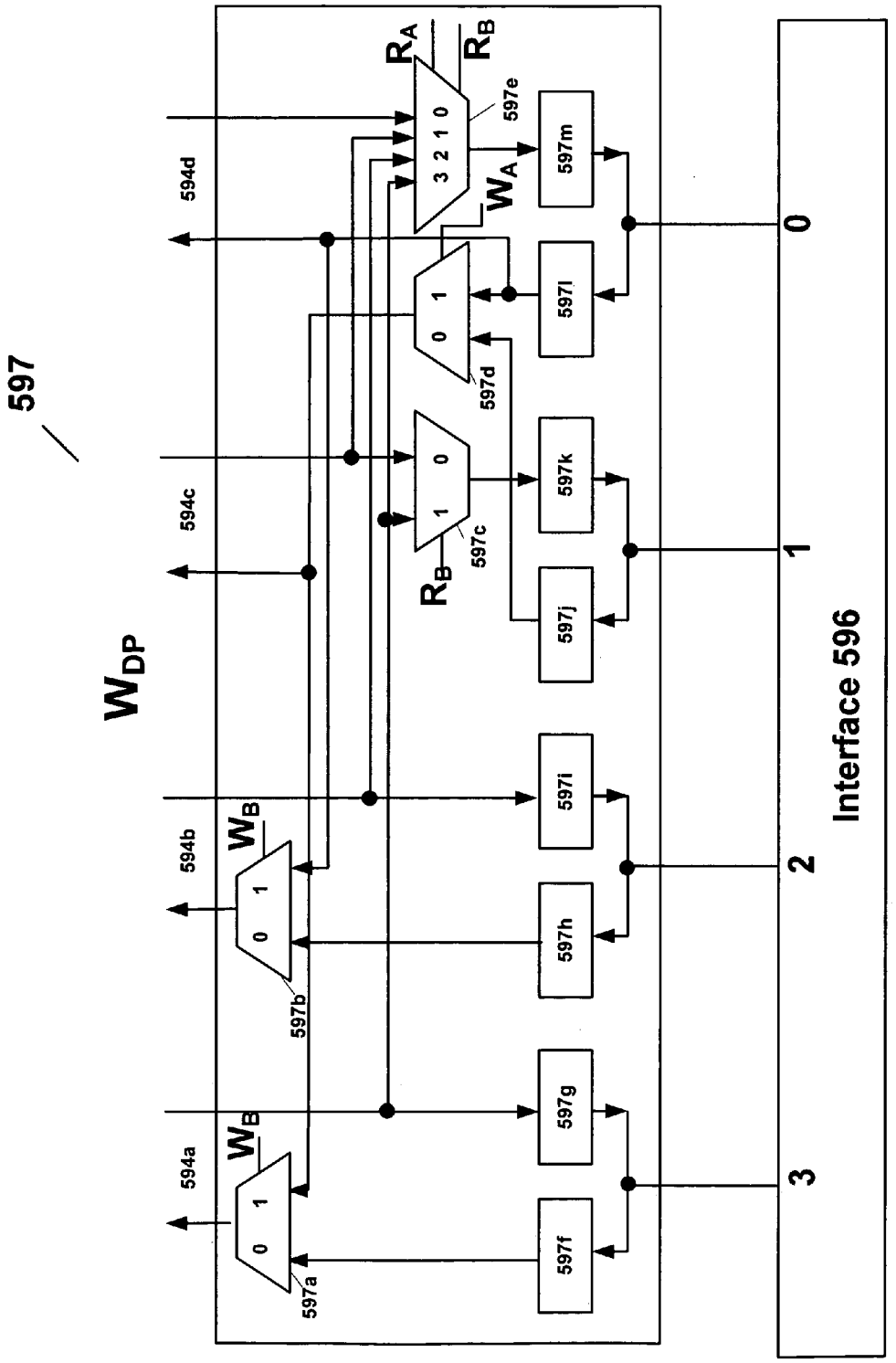
597
$W_{DP}$
594a
594b
594c
594d
$W_B$
$W_B$
$R_B$
$R_A$
$R_B$
$W_A$
597a
597b
597c
597d
597e
597f
597g
597h
597i
597j
597k
597l
597m
0
1
2
3
Interface 596

Fig. 5C

| Width | Write | | Read | | Interface 596 Connections |
|---|---|---|---|---|---|
| | $W_A$ | $W_B$ | $R_A$ | $R_B$ | |
| 1 | 1 | 1 | $A_0$ | $A_1$ | 0 |
| 2 | 0 | 1 | 0 | $A_0$ | 0 and 1 |
| 4 | 0 | 0 | 0 | 0 | 3, 2, 1 and 0 |

Fig. 5D

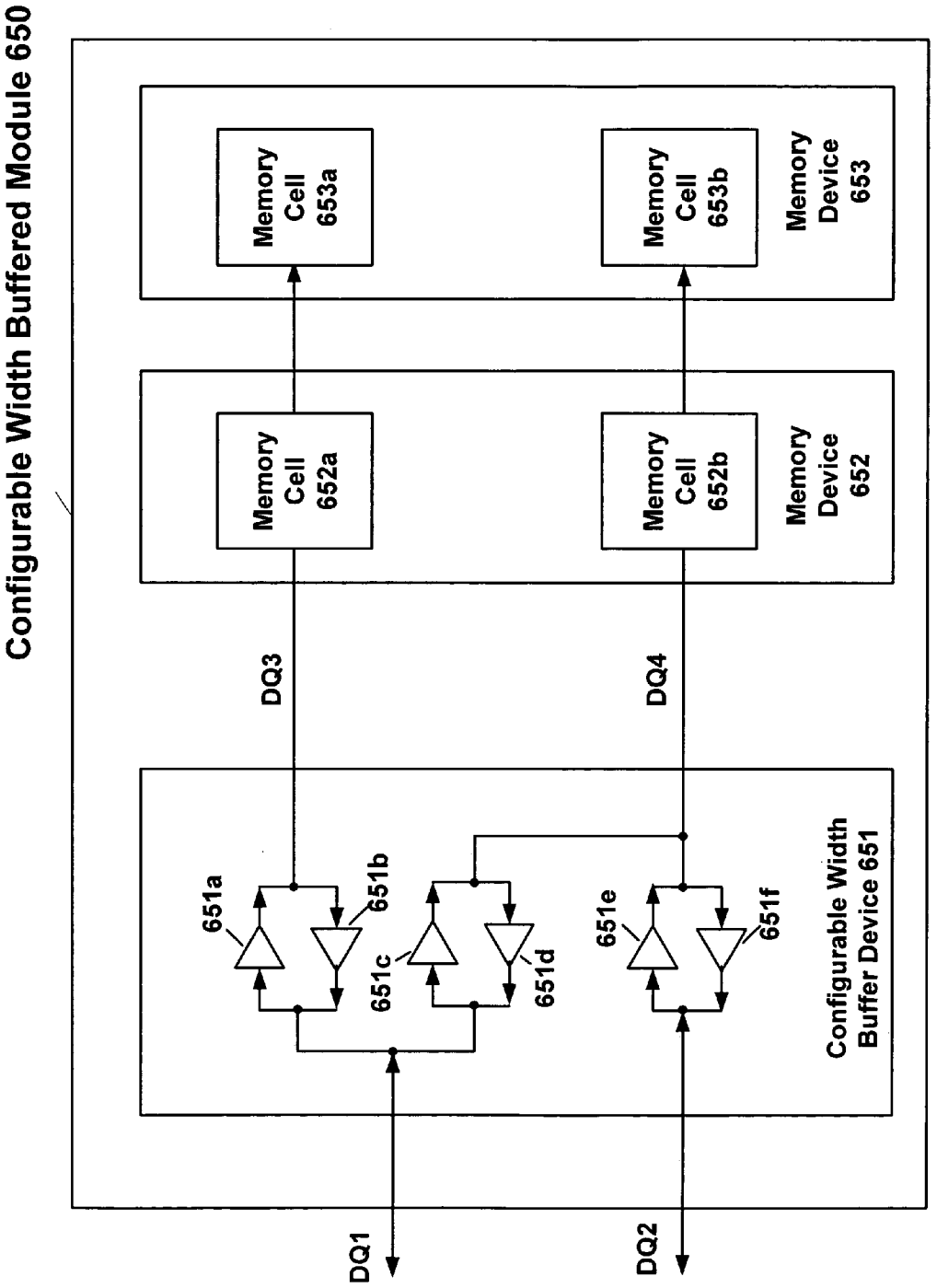
Configurable Width Buffered Module 650
Memory Cell 653a
Memory Cell 653b
Memory Device 653
Memory Cell 652a
Memory Cell 652b
Memory Device 652
DQ3
DQ4
651a
651b
651c
651d
651e
651f
Configurable Width Buffer Device 651
DQ1
DQ2

Fig. 5E

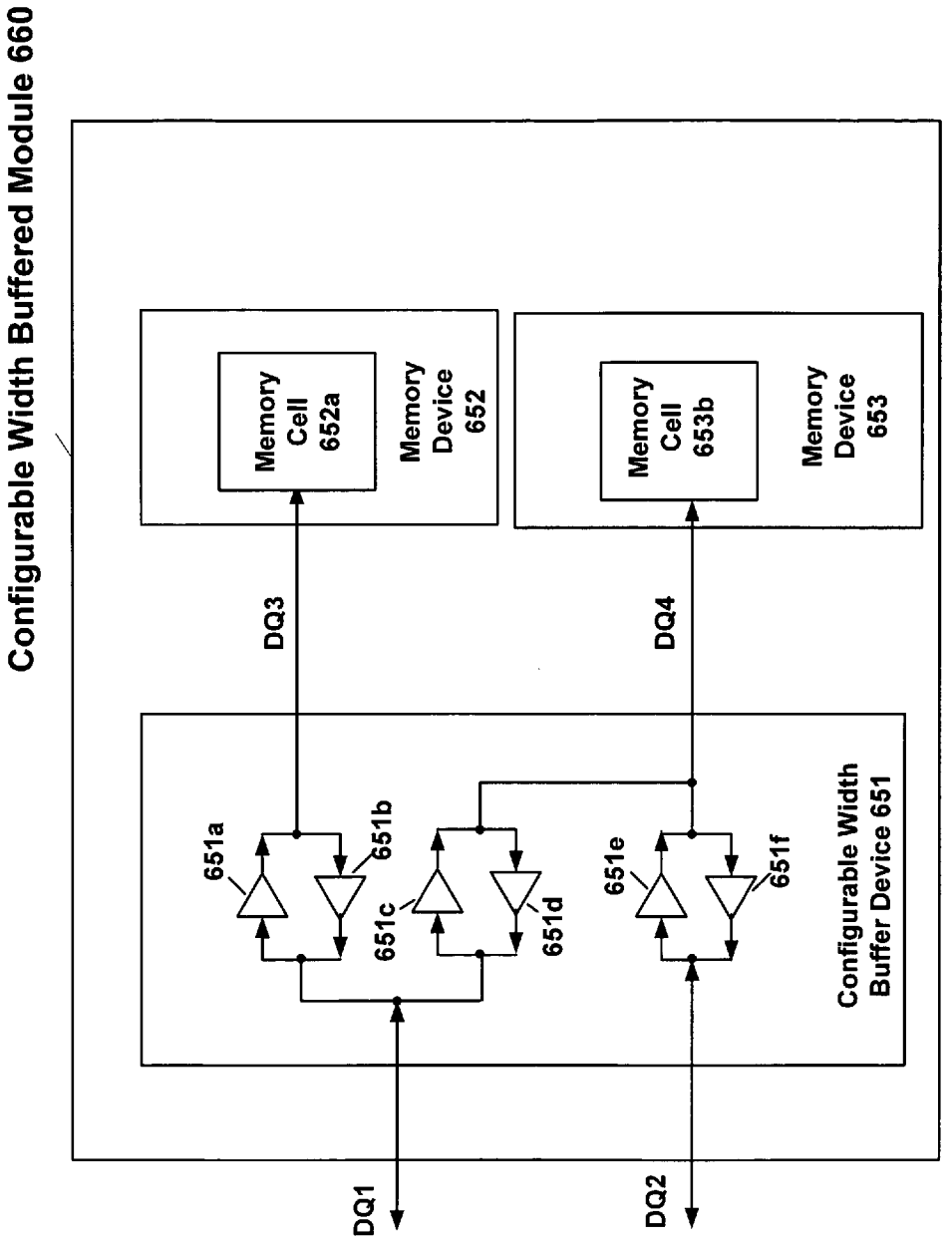
Configurable Width Buffered Module 660
Memory Cell 652a
Memory Device 652
Memory Cell 653b
Memory Device 653
DQ3
DQ4
651a
651b
651c
651d
651e
651f
Configurable Width Buffer Device 651
DQ1
DQ2

Fig. 5F

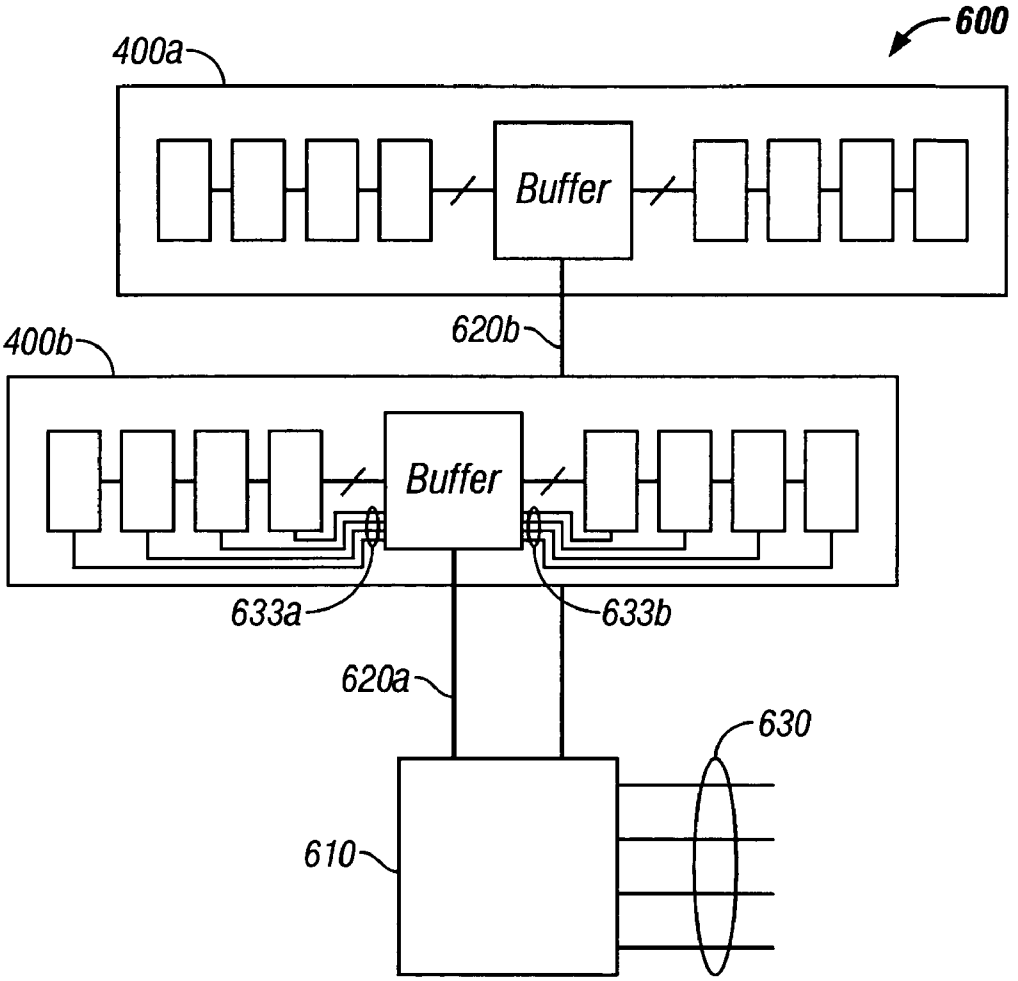


FIG. 6A

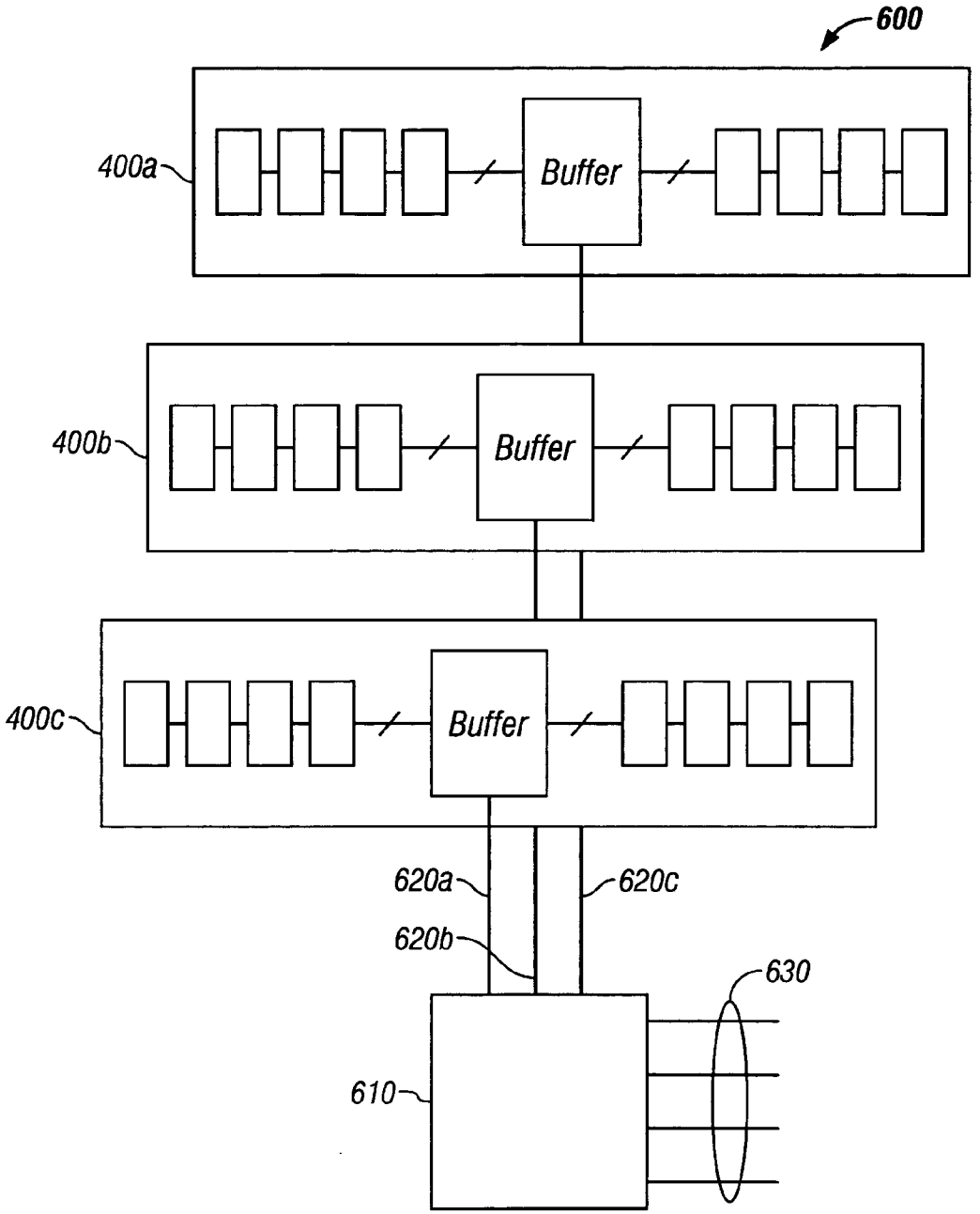
600
400a
Buffer
400b
Buffer
400c
Buffer
620a
620c
620b
630
610

FIG. 6B

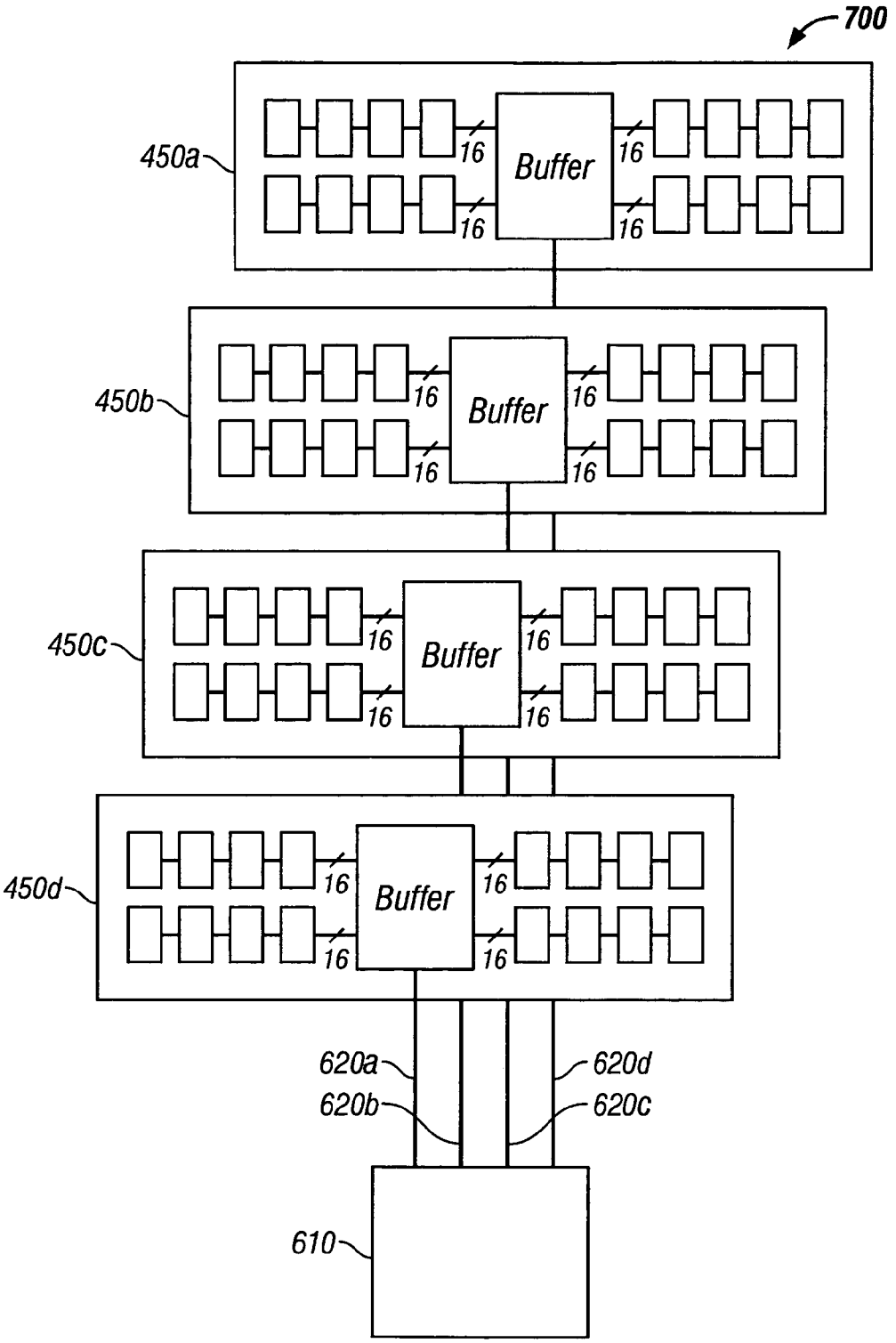


FIG. 7

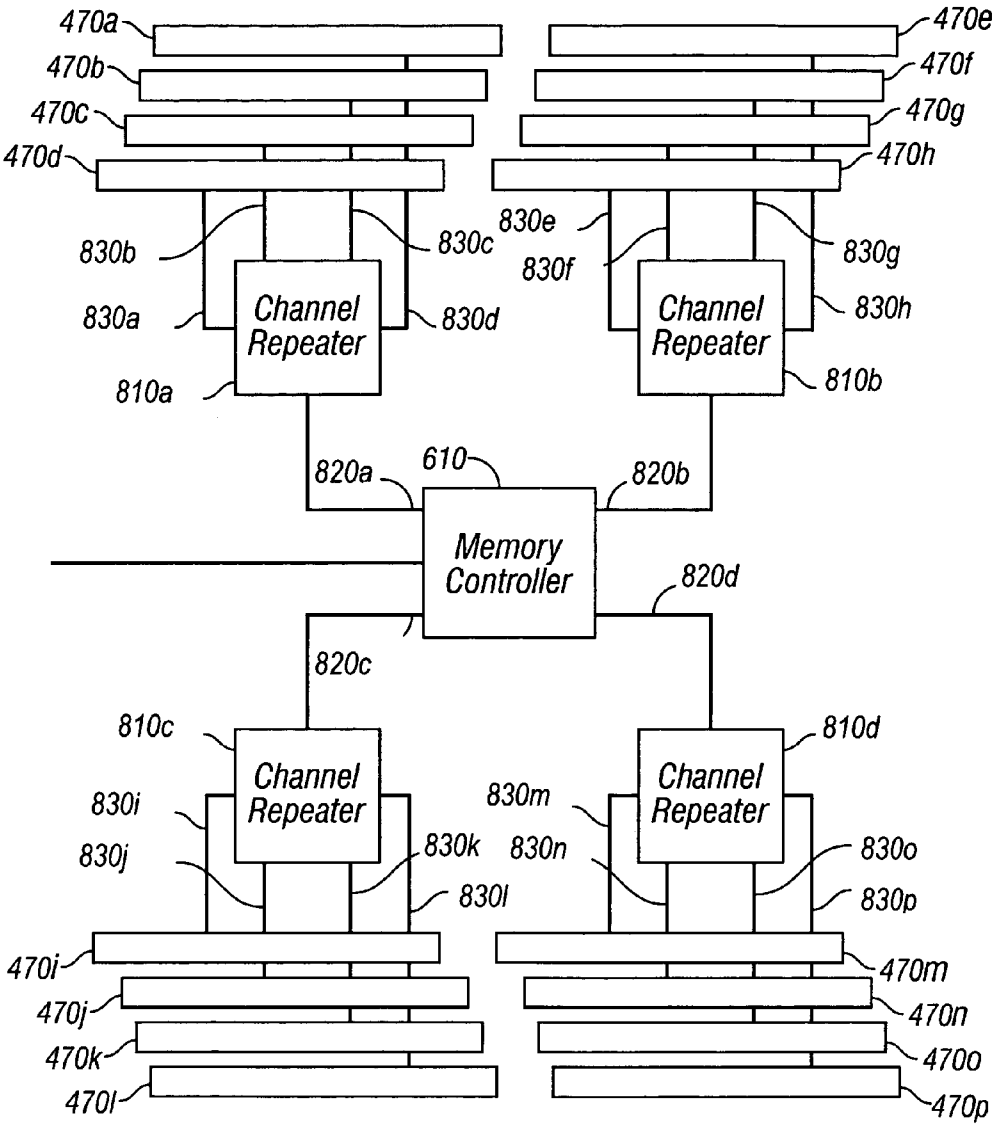
470a
470b
470c
470d
470e
470f
470g
470h
830b
830c
830e
830f
830g
830a
830d
830h
Channel Repeater
Channel Repeater
810a
810b
820a
610
820b
Memory Controller
820d
820c
810c
810d
Channel Repeater
Channel Repeater
830i
830j
830k
830l
830m
830n
830o
830p
470i
470j
470k
470l
470m
470n
470o
470p

FIG. 8A

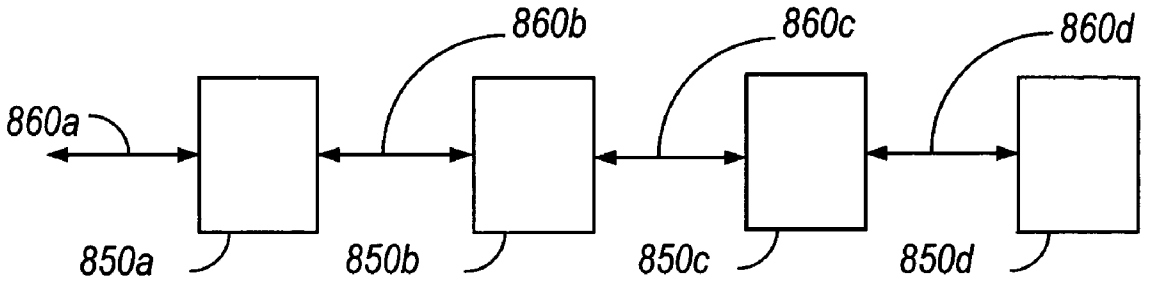


FIG. 8B

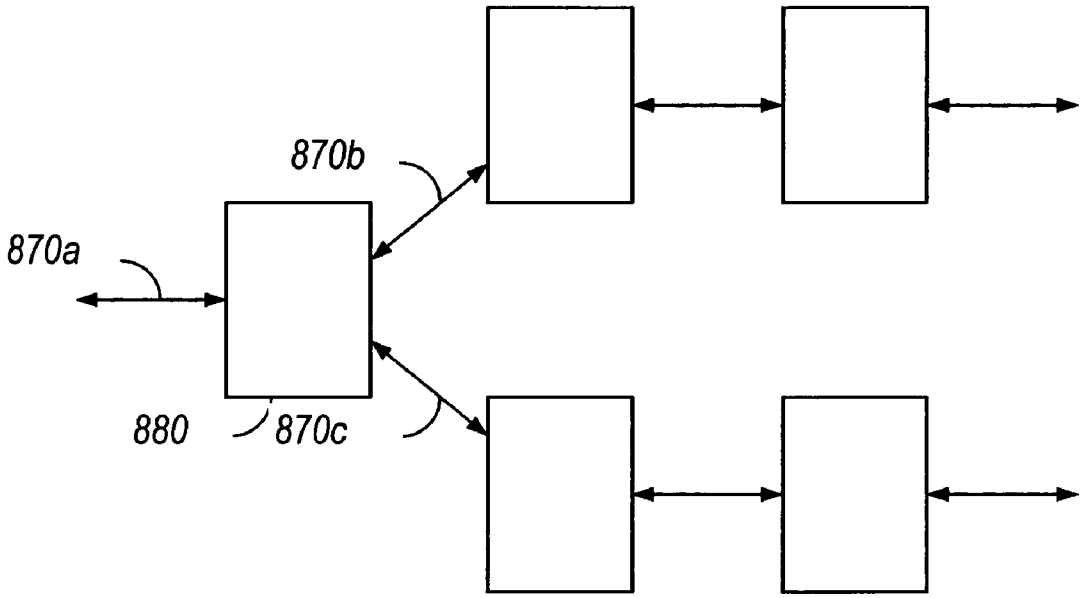


FIG. 8C

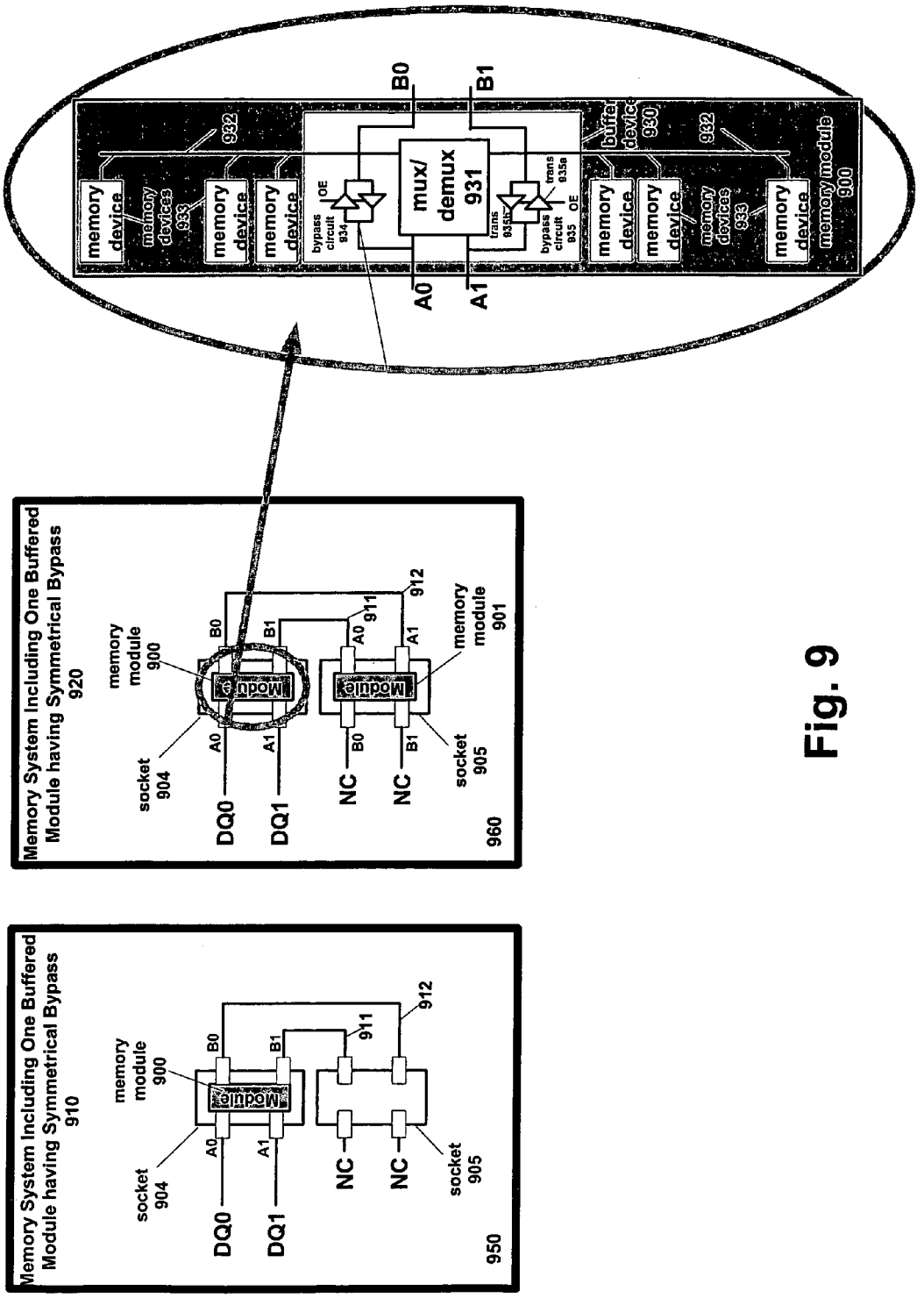
Memory System Including One Buffered Module having Symmetrical Bypass
910
memory module 900
socket 904
DQ0
DQ1
A0
A1
B0
B1
NC
NC
911
912
socket 905
950
Memory System Including One Buffered Module having Symmetrical Bypass
920
memory module 900
memory module 901
960
memory device
memory devices 933
932
bypass circuit 934
OE
mux/ demux 931
trans 935b
trans 935a
bypass circuit 935
buffer device 930
memory modules 900

Fig. 9

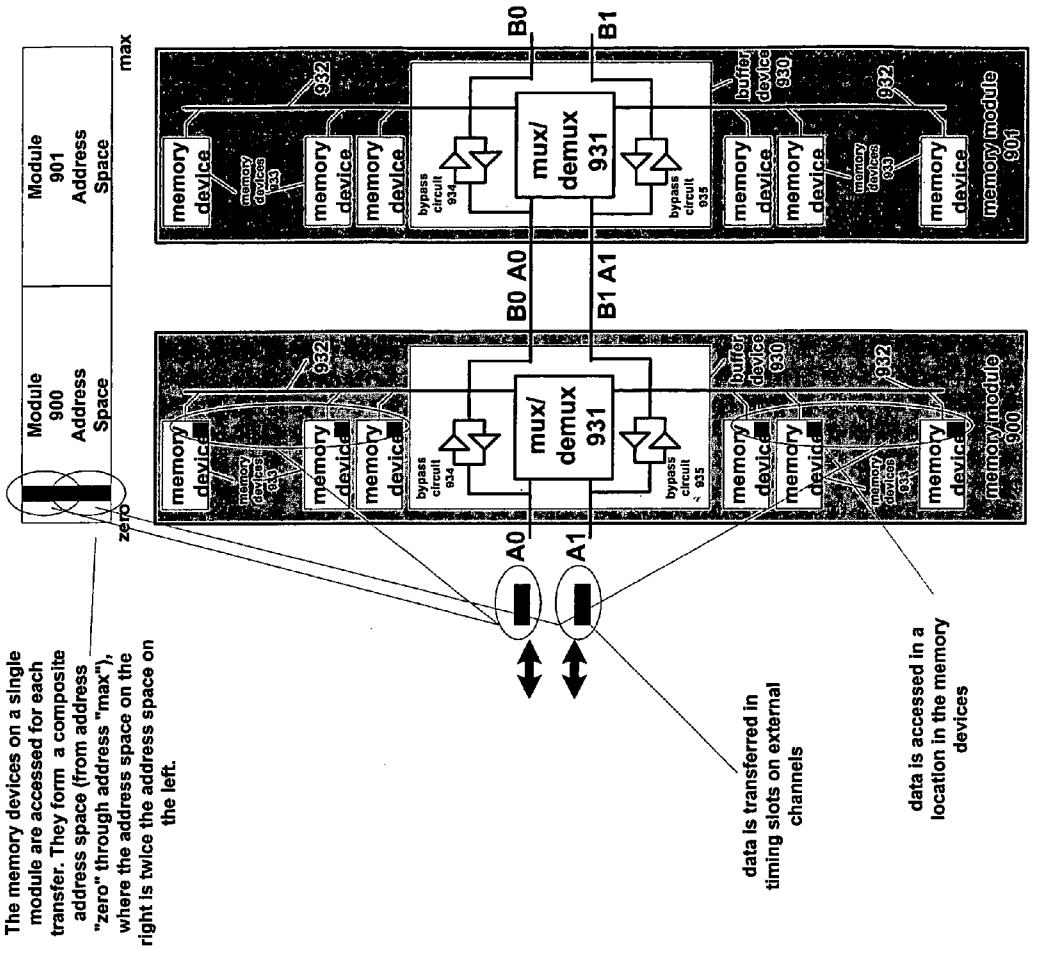


Fig. 10B

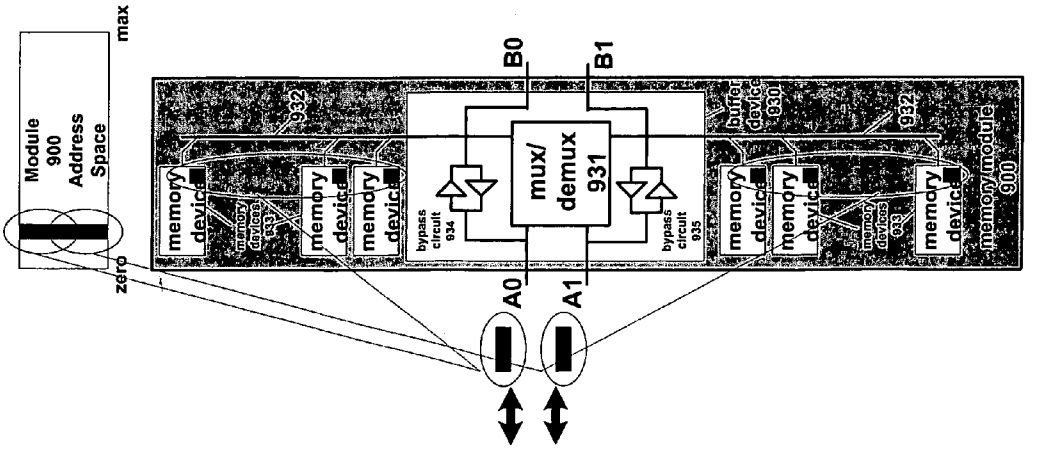


Fig. 10A

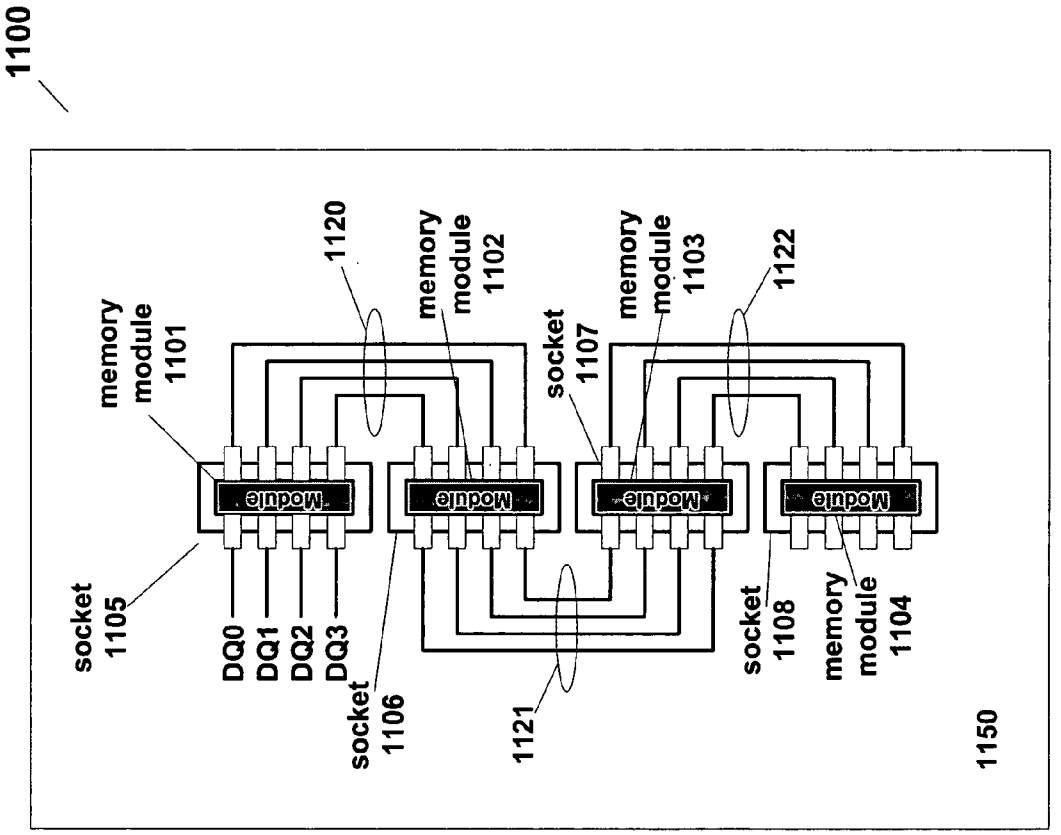
1100
memory module 1101
socket 1105
DQ0
DQ1
DQ2
DQ3
1120
memory module 1102
socket 1106
1121
socket 1107
memory module 1103
1122
socket 1108
memory module 1104
1150
Module
Module
Module
Module

Fig. 11

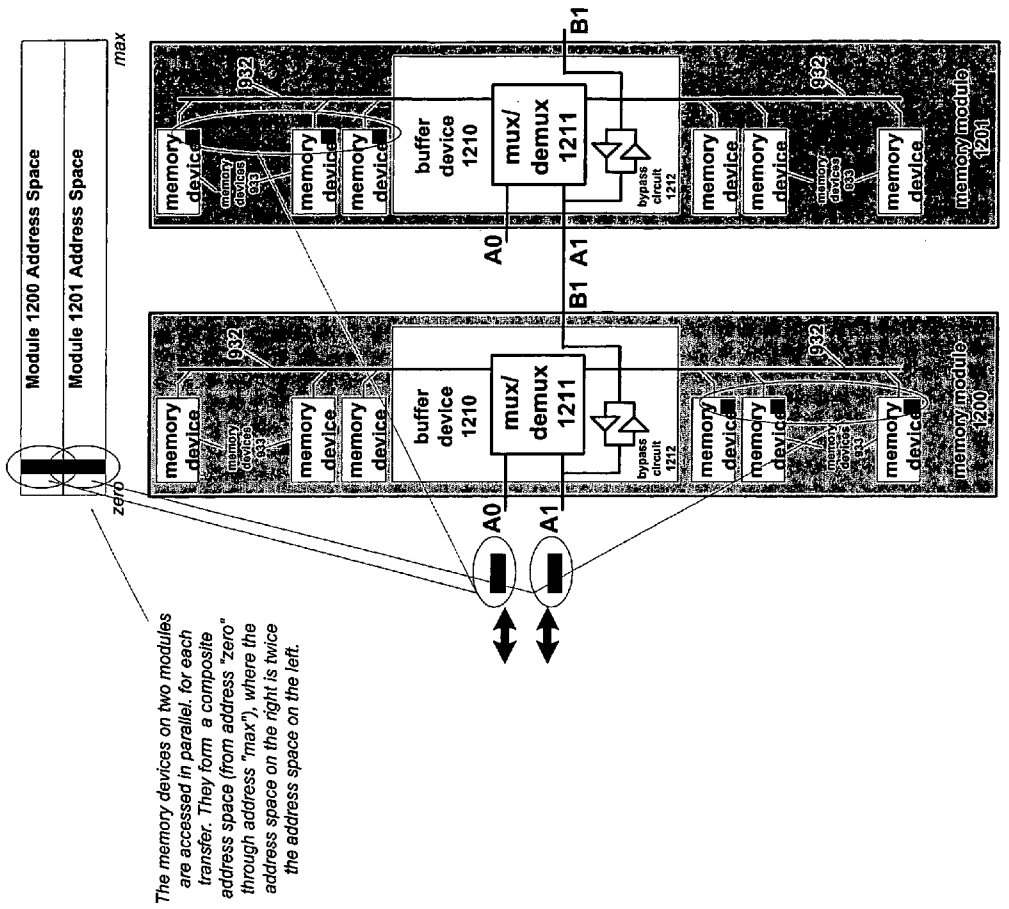


Fig. 12B

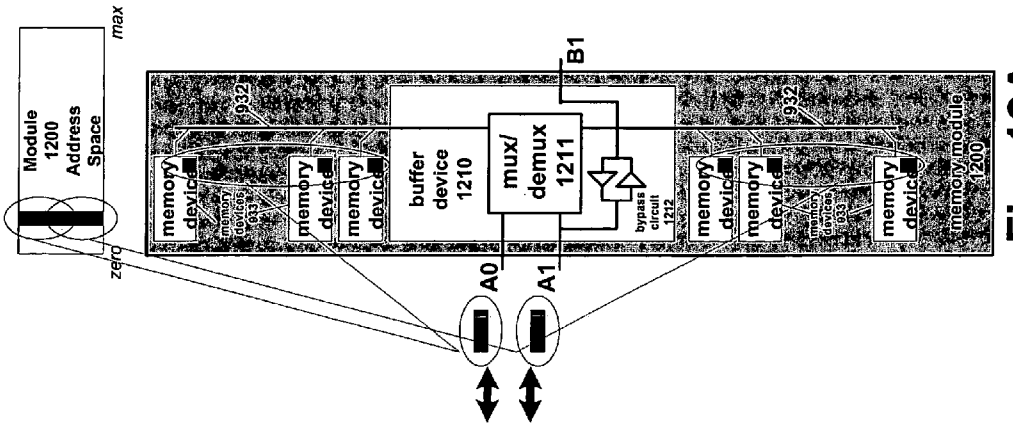


Fig. 12A

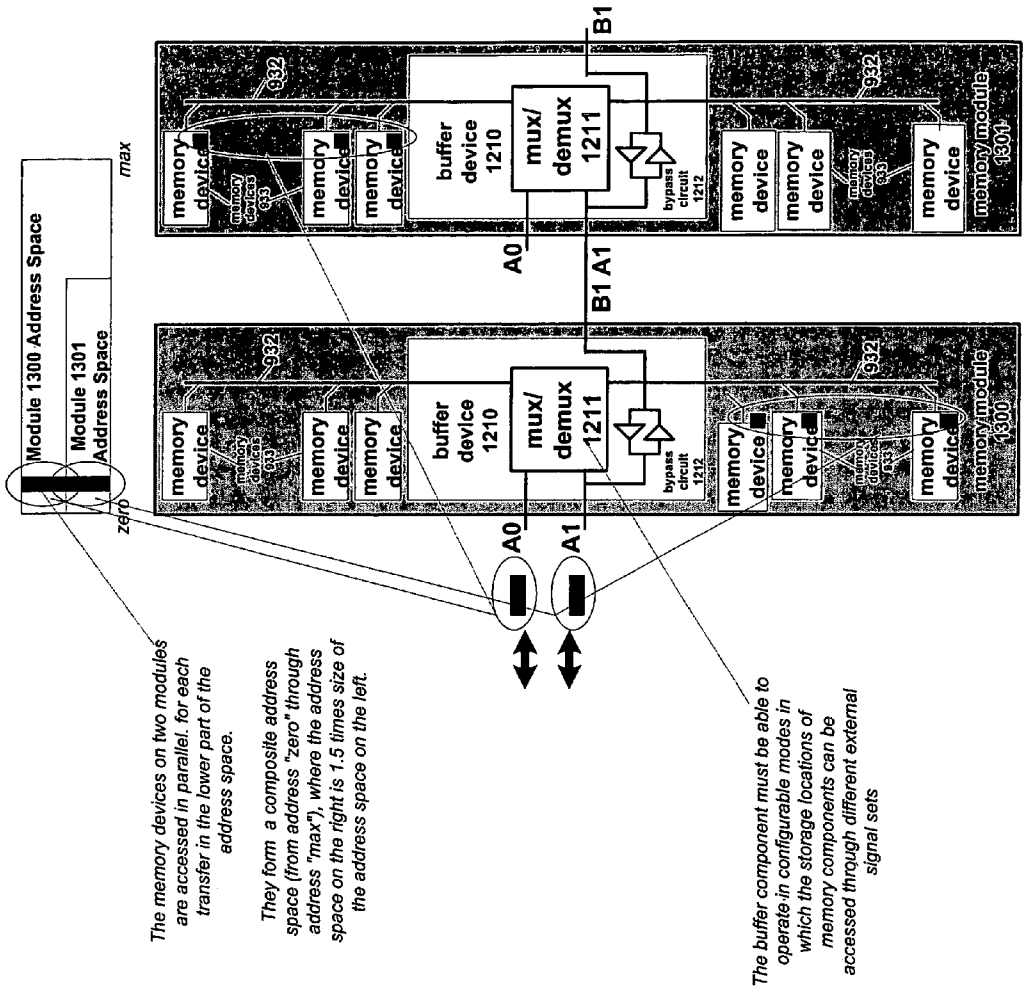


Fig. 13B

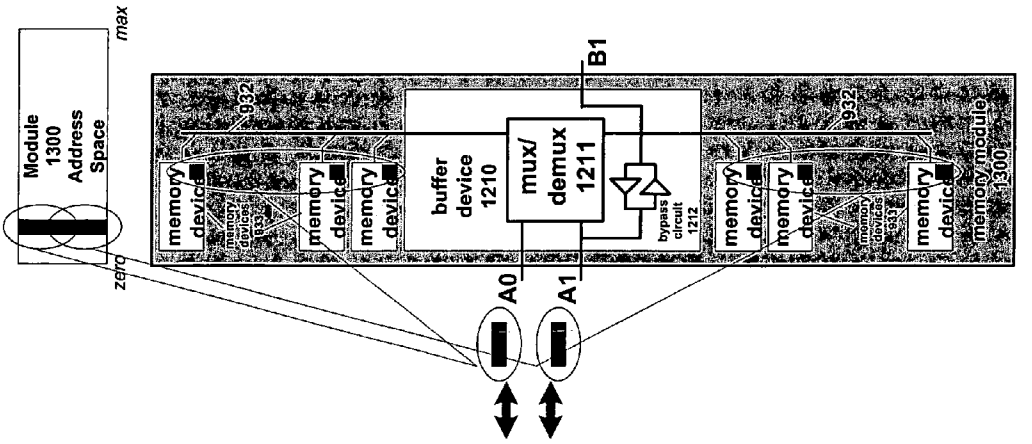


Fig. 13A

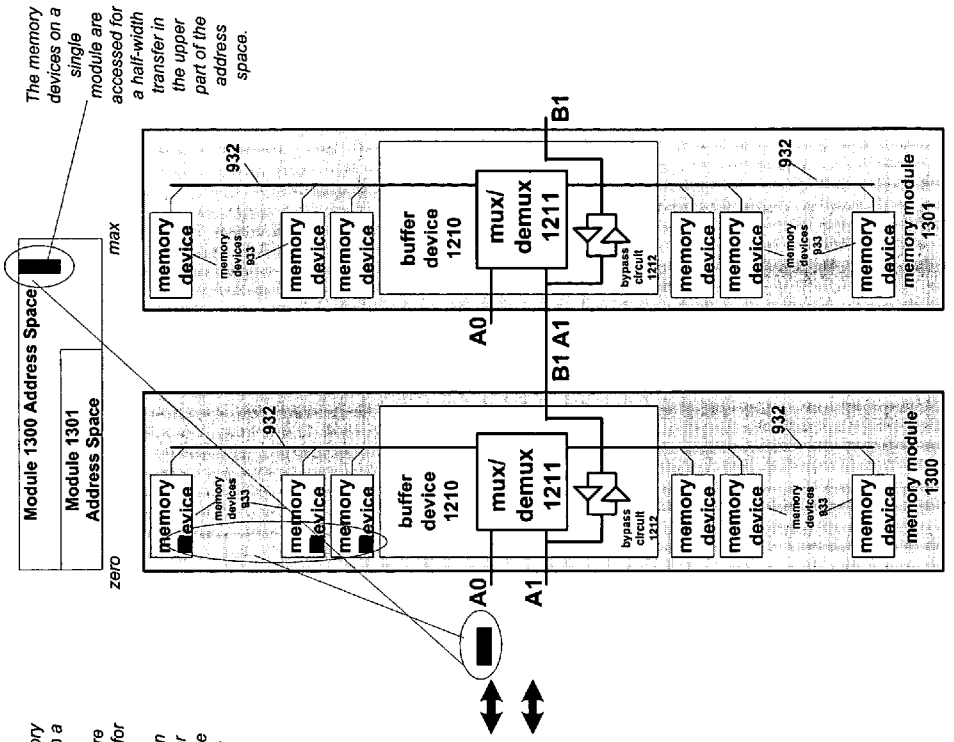


Fig. 14B

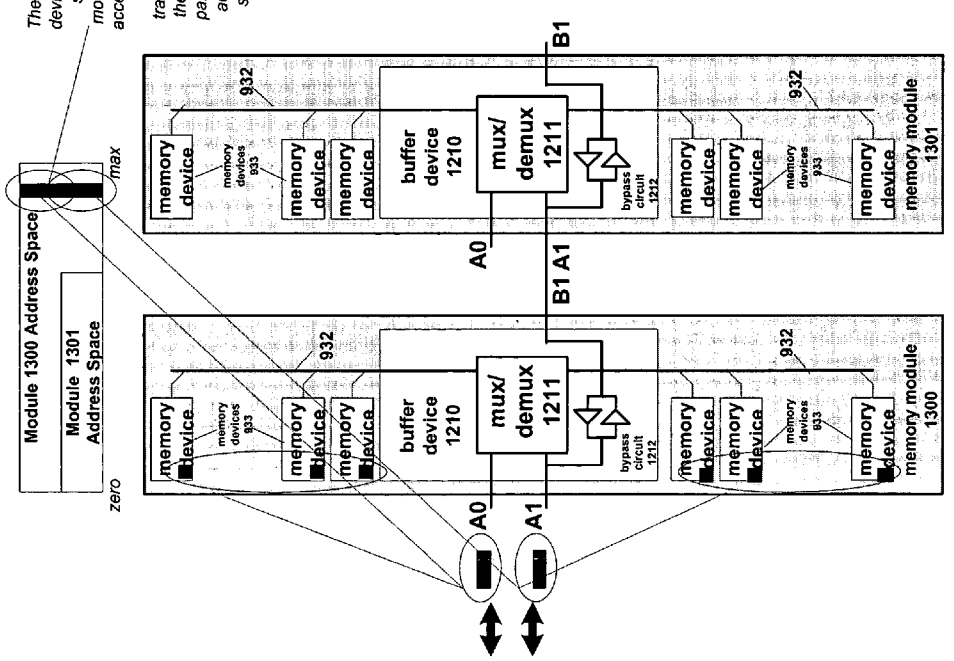


Fig. 14A

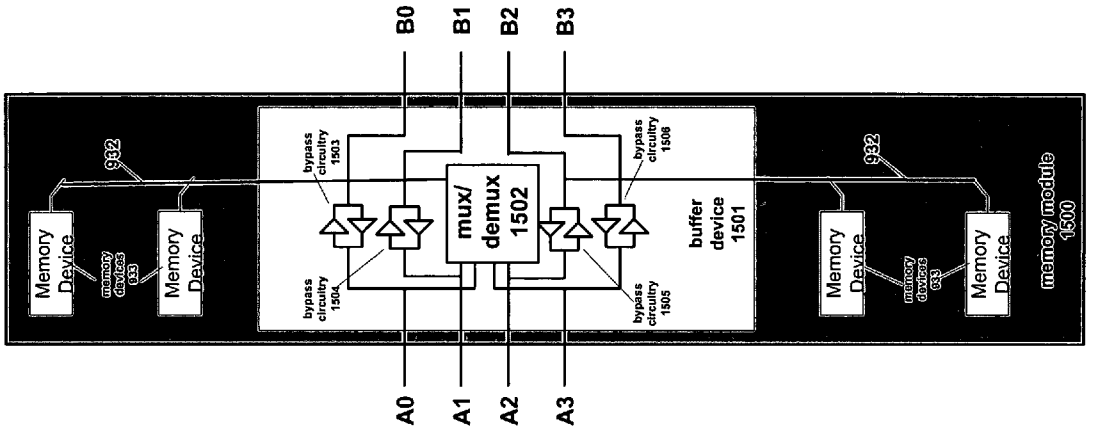
Memory Device
memory devices 633
Memory Device
632
bypass circuitry 1504
bypass circuitry 1503
mux/ demux 1502
bypass circuitry 1506
bypass circuitry 1508
buffer device 1501
Memory Device
memory devices 633
Memory Device
632
memory module 1500
A0
A1
A2
A3
B0
B1
B2
B3

Fig. 15

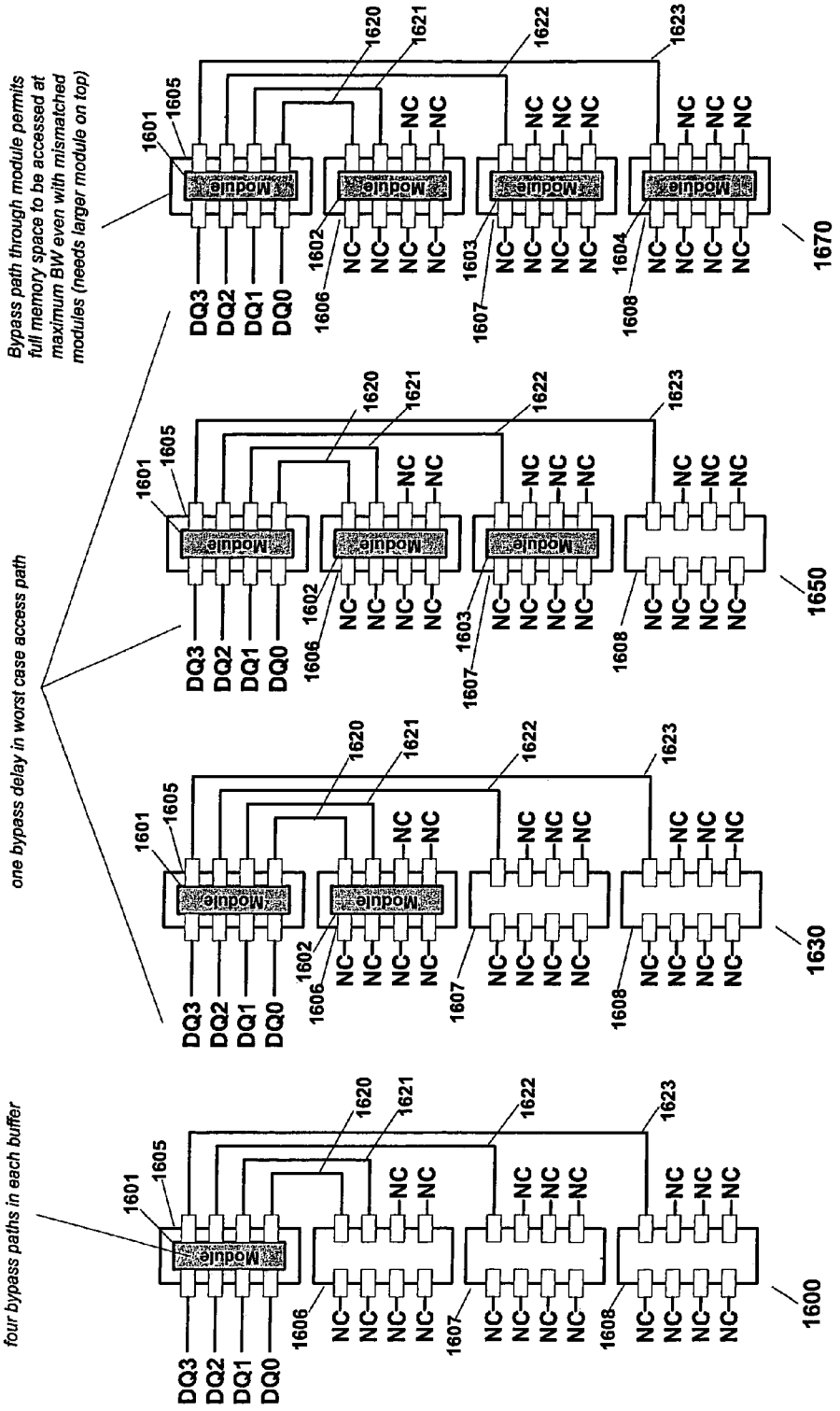


Fig. 16A

Fig. 16B

Fig. 16C

Fig. 16D

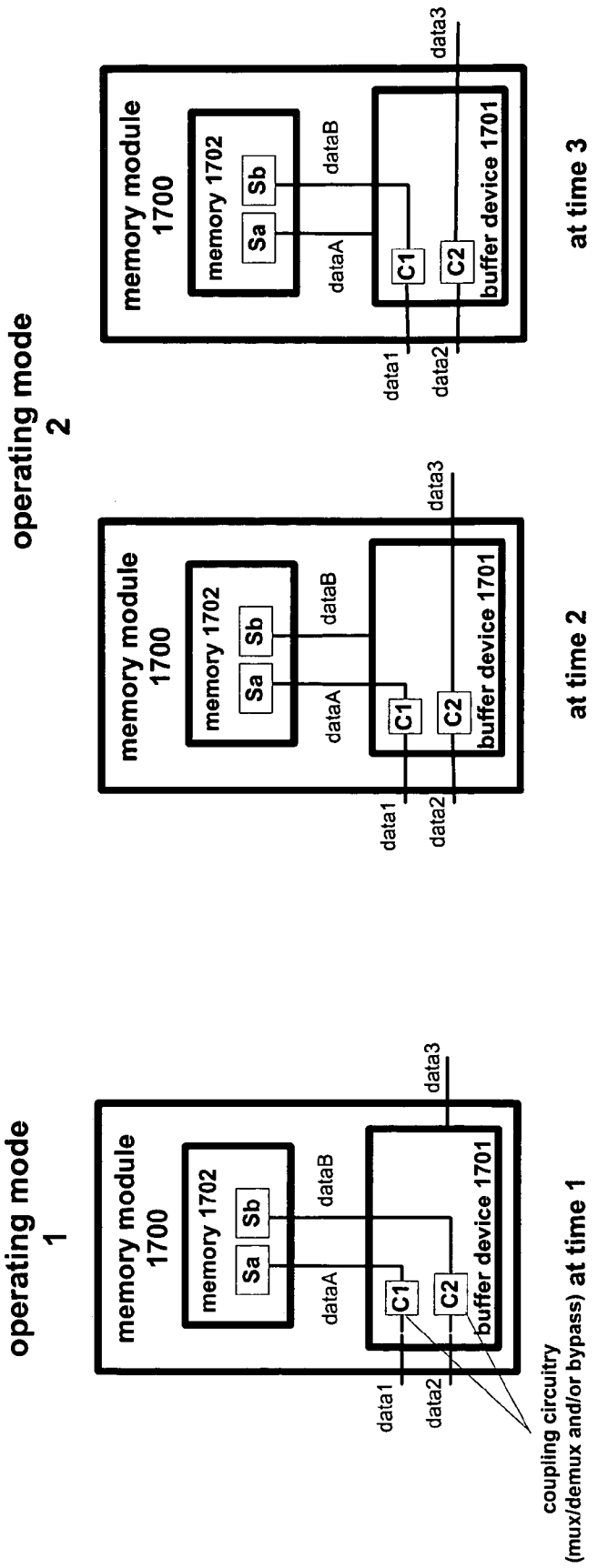
operating mode 1
memory module 1700
memory 1702
Sa
Sb
dataA
dataB
C1
C2
buffer device 1701
data1
data2
data3
coupling circuitry (mux/demux and/or bypass)
at time 1
operating mode 2
memory module 1700
memory 1702
Sa
Sb
dataA
dataB
C1
C2
buffer device 1701
data1
data2
data3
at time 2
memory module 1700
memory 1702
Sa
Sb
dataA
dataB
C1
C2
buffer device 1701
data1
data2
data3
at time 3

Fig. 17

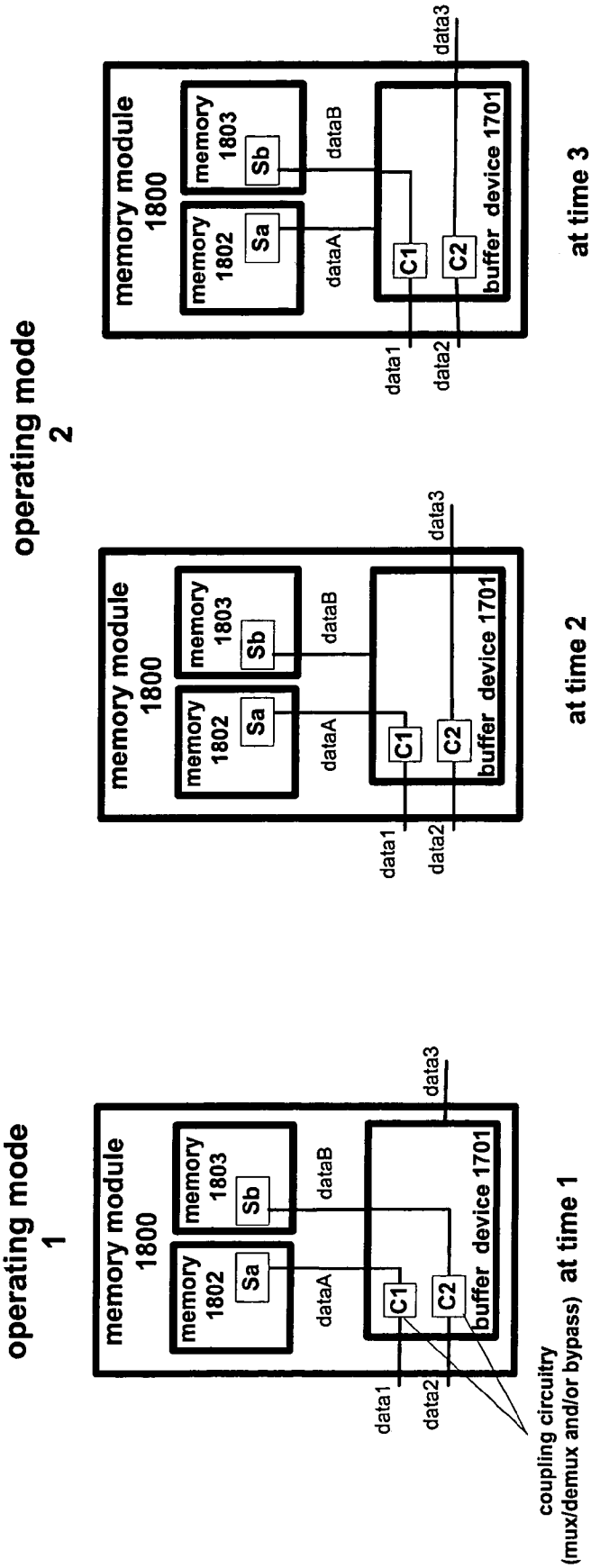
operating mode 1
memory module 1800
memory 1802
Sa
memory 1803
Sb
dataA
dataB
C1
C2
buffer device 1701
data1
data2
data3
coupling circuitry (mux/demux and/or bypass)
at time 1
operating mode 2
memory module 1800
memory 1802
Sa
memory 1803
Sb
dataA
dataB
C1
C2
buffer device 1701
data1
data2
data3
at time 2
memory module 1800
memory 1802
Sa
memory 1803
Sb
dataA
dataB
C1
C2
buffer device 1701
data1
data2
data3
at time 3

Fig. 18

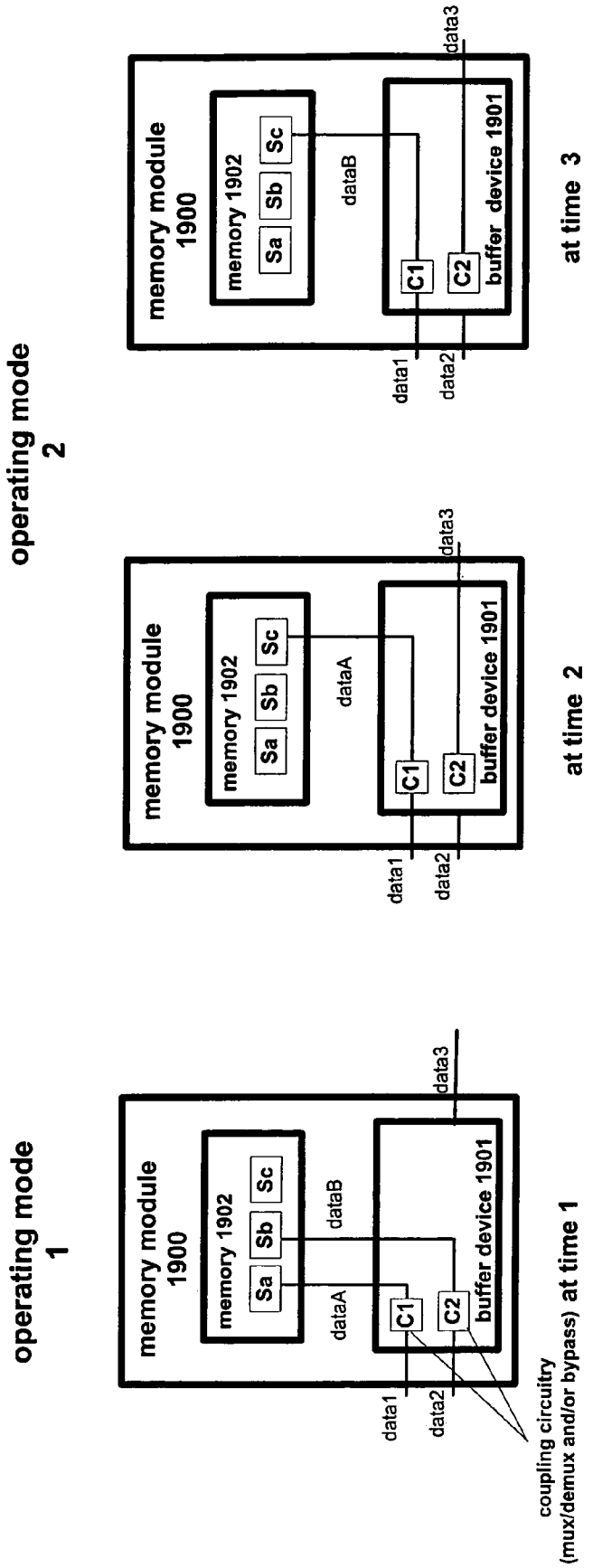
operating mode 1
memory module 1900
memory 1902
Sa
Sb
Sc
dataA
dataB
C1
C2
buffer device 1901
data1
data2
data3
coupling circuitry (mux/demux and/or bypass)
at time 1
operating mode 2
memory module 1900
memory 1902
Sa
Sb
Sc
dataA
C1
C2
buffer device 1901
data1
data2
data3
at time 2
memory module 1900
memory 1902
Sa
Sb
Sc
dataB
C1
C2
buffer device 1901
data1
data2
data3
at time 3

Fig. 19

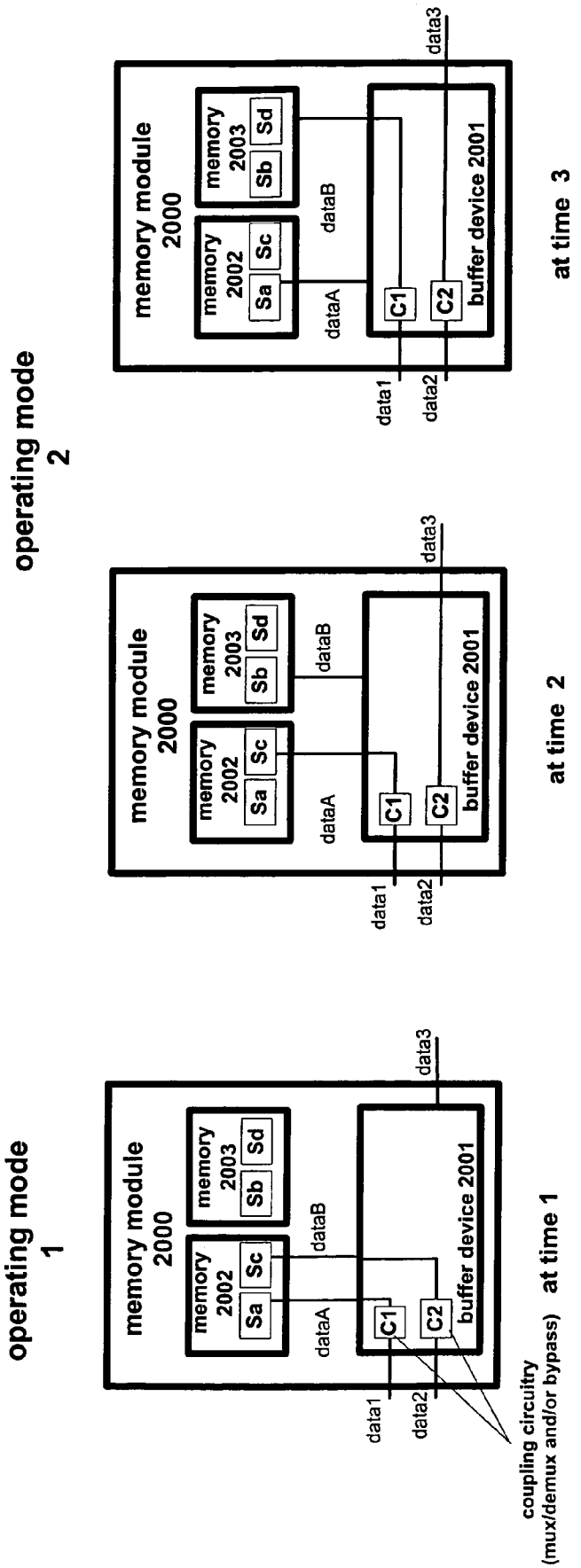
operating mode 1
memory module 2000
memory 2002
Sa
Sc
memory 2003
Sb
Sd
dataA
dataB
C1
C2
buffer device 2001
data1
data2
data3
coupling circuitry (mux/demux and/or bypass)
at time 1
operating mode 2
memory module 2000
memory 2002
Sa
Sc
memory 2003
Sb
Sd
dataA
dataB
C1
C2
buffer device 2001
data1
data2
data3
at time 2
memory module 2000
memory 2002
Sa
Sc
memory 2003
Sb
Sd
dataA
dataB
C1
C2
buffer device 2001
data1
data2
data3
at time 3

Fig. 20

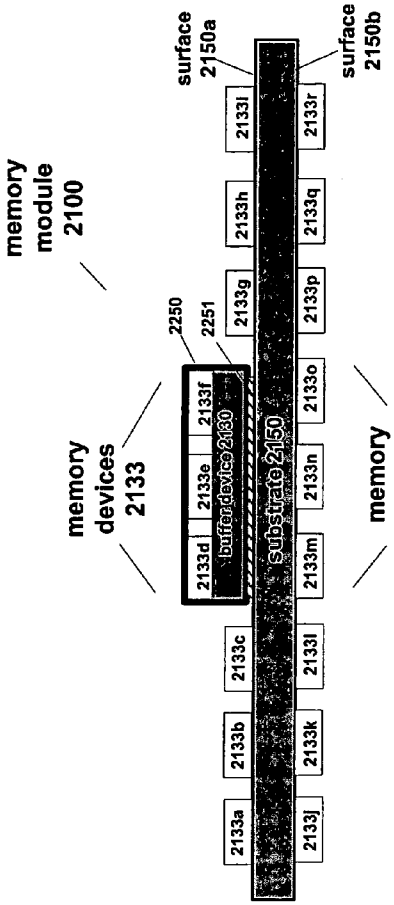
memory module 2100
surface 2150a
surface 2150b
memory devices 2133
memory devices 2133
2250
2251
2133a
2133b
2133c
2133d
2133e
2133f
2133g
2133h
2133i
2133j
2133k
2133l
2133m
2133n
2133o
2133p
2133q
2133r
buffer device 2130
substrate 2150

Fig. 22

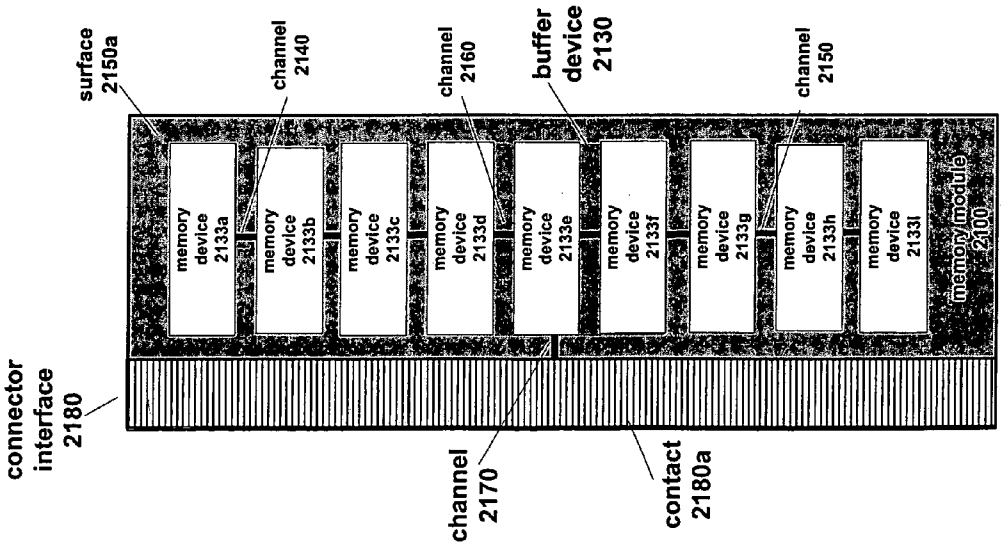
connector interface 2180
surface 2150a
channel 2140
channel 2160
buffer device 2130
channel 2150
channel 2170
contact 2180a
memory device 2133a
memory device 2133b
memory device 2133c
memory device 2133d
memory device 2133e
memory device 2133f
memory device 2133g
memory device 2133h
memory device 2133i
memory module 2100

Fig. 21

# CONFIGURABLE WIDTH BUFFERED MODULE HAVING A BYPASS CIRCUIT

This application is a continuation-in-part of U.S. patent application Ser. No. 10/766,131 filed on Jan. 28, 2004 (still pending); which is a continuation-in-part of U.S. patent application Ser. No. 10/272,024 filed on Oct. 15, 2002 (still pending); which is a continuation of U.S. patent application Ser. No. 09/479,375 filed on Jan. 5, 2000 (now U.S. Pat. No. 6,502,161).

## BACKGROUND OF THE INVENTION

This invention relates to memory systems, memory subsystems, memory modules or a system having memory devices. More specifically, this invention is directed toward memory system architectures that may include integrated circuit devices such as one or more controllers and a plurality of memory devices.

Some contemporary memory system architectures may demonstrate tradeoffs between cost, performance and the ability to upgrade, for example; the total memory capacity of the system. Memory capacity is commonly upgraded via memory modules or cards featuring a connector/socket interface. Often these memory modules are connected to a bus disposed on a backplane to utilize system resources efficiently. System resources include integrated circuit die area, package pins, signal line traces, connectors, backplane board area, just to name a few. In addition to upgradeability, many of these contemporary memory systems also require high throughput for bandwidth intensive applications, such as graphics.

With reference to FIG. **1**, a representational block diagram of a conventional memory system employing memory modules is illustrated. Memory system **100** includes memory controller **110** and modules **120***a*–**120***c*. Memory controller **110** is coupled to modules **120***a*–**120***c* via control/address bus **130**, data bus **140**, and corresponding module control lines **150***a*–**150***c*. Control/address bus **130** typically comprises a plurality of address lines and control signals (e.g., RAS, CAS and WE).

The address lines and control signals of control/address bus **130** are bussed and "shared" between each of modules **120***a*–**120***c* to provide row/column addressing and read/write, precharge, refresh commands, etc., to memory devices on a selected one of modules **120***a*–**120***c*. Individual module control lines **150***a*–**150***c* are typically dedicated to a corresponding one of modules **120***a*–**120***c* to select which of modules **120***a*–**120***c* may utilize the control/address bus **130** and data bus **140** in a memory operation.

Here and in the detailed description to follow, "bus" denotes a plurality of signal lines, each having one or more connection points for "transceiving" (i.e., transmitting or receiving). Each connection point connects or couples to a transceiver (i.e., a transmitter-receiver) or one of a single transmitter or receiver circuit. A connection or coupling is provided electrically, optically, magnetically, by way of quantum entanglement or equivalently thereof.

With further reference to FIG. **1**, memory system **100** may provide an upgrade path through the usage of modules **120***a*–**120***c*. A socket and connector interface may be employed which allows each module to be removed and replaced by a memory module that is faster or includes a higher capacity. Memory system **100** may be configured with unpopulated sockets or less than a full capacity of modules (i.e., empty sockets/connectors) and provided for increased capacity at a later time with memory expansion modules. Since providing a separate group of signals (e.g., address lines and data lines) to each module is avoided using the bussed approach, system resources in memory system **100** are efficiently utilized.



U.S. Pat. No. 5,513,135 discloses a contemporary dual inline memory module (DIMM) having one or more discrete buffer devices.

Examples of contemporary memory systems employing buffered modules are illustrated in FIGS. **2**A and **2**B. FIG. **2**A illustrates a memory system **200** based on a Rambus® channel architecture and FIG. **2**B illustrates a memory system **210** based on a Synchronous Link architecture. Both of these systems feature memory modules having buffer devices **250** disposed along multiple transmit/receive connection points of bus **260**.

In an upgradeable memory system, such as conventional memory system **100**, different memory capacity configurations become possible. Each different memory capacity configuration may present different electrical characteristics to the control/address bus **130**. For example, load capacitance along each signal line of the control/address bus **130** may change with two different module capacity configurations. However, using conventional signaling schemes, the bussed approaches lend efficiency towards resource utilization of a system and permits module interfacing for upgradeability.

There is a need for memory system architectures or interconnect topologies that provide flexible and cost effective upgrade capabilities while providing high bandwidth to keep pace with microprocessor operating frequencies.

## BRIEF DESCRIPTION OF THE DRAWINGS

In the course of the detailed description to follow, reference will be made to the attached drawings, in which:

FIG. **1** illustrates a representational block diagram of a conventional memory system employing memory modules;

FIGS. **2**A and **2**B illustrate contemporary memory systems employing buffered modules;

FIGS. **3**A and **3**B illustrate a block diagram representing memory systems according to embodiments of the present invention;

FIG. **3**C illustrates a block diagram representing a memory module that includes a configurable width buffer device according to an embodiment of the present invention;

FIGS. **4**A, **4**B, and **4**C illustrate buffered memory modules according to embodiments of the present invention;

FIG. **5**A illustrates a block diagram of a buffer device according to another embodiment of the present invention;

FIG. **5**B illustrates a block diagram of a configurable width buffer device according to an embodiment of the present invention;

FIG. **5**C illustrates a block diagram showing multiplexing and demultiplexing logic used in a configurable width interface of a buffer device shown in FIG. **5**B according to an embodiment of the present invention;

FIG. **5**D is a table showing control input states to achieve specified data widths in the configurable width buffer device shown in FIG. **5**B;

FIGS. **5**E and **5**F illustrate configurable width buffered modules including a configurable width buffer device coupled to memory devices according to an embodiment of the present invention;

FIGS. **6**A and **6**B illustrate block diagrams of a memory system according to other embodiments of the present invention;

FIG. **7** illustrates a block diagram of a memory system employing a buffered quad-channel module according to an embodiment of the present invention;

FIG. **8**A illustrates a block diagram of a large capacity memory system according to another embodiment of the present invention; and

FIGS. **8**B and **8**C illustrate another approach utilized to expand the memory capacity of a memory system in accordance to yet another embodiment of the present invention;

FIG. **9** illustrates a memory system including a buffered memory module having symmetric bypass circuits in accordance to an embodiment of the present invention;

FIG. **10**A illustrates an address space for a single buffered memory module having symmetric bypass circuits in accordance to an embodiment of the present invention;

FIG. **10**B illustrates an address space for two buffered memory modules having respective symmetric bypass circuits in accordance to an embodiment of the present invention;

FIG. **11** illustrates a memory system including four buffered memory modules having respective symmetric bypass circuits in accordance to an embodiment of the present invention;

FIG. **12**A illustrates an address space for a single buffered memory module having asymmetric bypass circuit in accordance to an embodiment of the present invention;

FIG. **12**B illustrates an address space for two buffered memory modules having respective asymmetric bypass circuits in accordance to an embodiment of the present invention;

FIG. **13**A illustrates an address space for a single buffered memory module having asymmetric bypass circuit in accordance to an embodiment of the present invention;

FIG. **13**B illustrates an address space for two buffered memory modules having respective asymmetric bypass circuits when the two buffer memory modules do not have equal storage capacity in accordance to an embodiment of the present invention;

FIG. **14**A illustrates managing an address space for a single buffered memory module having asymmetric bypass circuit in a memory system having buffered memory modules with unequal storage capacity in accordance to an embodiment of the present invention;

FIG. **14**B illustrates managing an address space for two buffered memory modules having respective asymmetric bypass circuits when the two buffered memory modules have unequal storage capacity in accordance to an embodiment of the present invention;

FIG. **15** illustrates a buffered memory module having bypass circuits for coupling to four channels in accordance to an embodiment of the present invention;

FIG. **16**A illustrates how a single buffered memory module, as shown in FIG. **15**, is used in a four-socket memory system in accordance to an embodiment of the present invention;

FIG. **16**B illustrates how two buffered memory modules, as shown in FIG. **15**, are used in a four-socket memory system in accordance to an embodiment of the present invention;

FIG. **16**D illustrates how three buffered memory modules, as shown in FIG. **15**, are used in a four-socket memory system in accordance to an embodiment of the present invention;

FIG. **16**D illustrates how four buffered memory modules, as shown in FIG. **15**, are used in a four-socket memory system in accordance to an embodiment of the present invention;

FIGS. **17** and **19** illustrate different modes of operation of a buffered memory module in accessing storage cells in a memory device in accordance to an embodiment of the present invention;

FIGS. **18** and **20** illustrate different modes of operation of a buffered memory module in accessing respective storage cells in respective memory devices in accordance to an embodiment of the present invention;

FIGS. **21** and **22** illustrate different views of a memory module having a buffer device positioned between a substrate and an integrated circuit memory device in accordance to embodiments of the present invention.

## DETAILED DESCRIPTION

The present invention relates to a memory system which includes one or more semiconductor memory devices coupled to a buffer device having a bypass circuit. The buffer device may be disposed on a memory module, housed in a common package along with memory devices, or situated on a motherboard, for example, main memory in a personal computer or server. The buffer device may also be employed in an embedded memory subsystem, for example such as one found on a computer graphics card, video game console or a printer.

In several embodiments, the buffer device having a bypass circuit provides for flexible system configurations, and several performance benefits. For example, a buffer device having a bypass circuit enables adding memory module upgrades to a memory system while reducing system delays for accessing information from the memory module upgrades. Further, the buffer device may be a configurable width buffer device to provide upgrade flexibility and/or provide high bandwidth among a variety of possible module configurations in the system. A plurality of buffer devices, configurable or otherwise, may be utilized in the memory system to provide high capacity, without compromising performance. A buffer device having configurable width functionality may be employed to allow memory subsystem bandwidth to scale as the system is upgraded or to allow theoretical maximum memory subsystem bandwidth to be achieved among possible memory module configurations. As specified herein, "configurable width" is used to denote that interfacing to the buffer device may be configured in a flexible manner, for example, by configuring how many parallel bits of data may be transferred with the buffer device.

In several embodiments, one or more busses or a plurality of point-to-point links may be used to couple one or more buffer devices to a master (e.g., a controller or microprocessor device). A dynamic point-to-point link topology or any combination of point-to-point links or busses may be used to interface the master device and a corresponding buffer device.

In a specific embodiment, at least one point-to-point link connects at least one memory subsystem to the master, (e.g., a processor or controller). The memory system may be upgraded by coupling memory subsystems to the master via respective dedicated point-to-point links. Each memory subsystem includes a buffer device (e.g., a configurable width buffer device) that communicates to a plurality of memory devices. The master communicates with each buffer device via each point-to-point link. The buffer device may be disposed on a memory module along with the plurality of memory devices and connected to the point-to-point link via a connector. Alternatively, the buffer device may be disposed

on a common printed circuit board or backplane link along with the corresponding point-to-point link and master.

"Memory devices" are a common class of integrated circuit devices that have a plurality of storage cells, collectively referred to as a memory array. A memory device stores data (which may be retrieved) associated with a particular address provided, for example, as part of a write or read command. Examples of types of memory devices include dynamic random access memory (DRAM), static random access memory (SRAM), and double data rate SDRAM (DDR). A memory device typically includes request decode and array access logic that, among other functions, decodes request and address information, and controls memory transfers between a memory array and routing path. A memory device includes a transceiver for transmitting and receiving data in an embodiment of the present invention. A transceiver includes a transmitter circuit to output data synchronously with respect to rising and falling edges of a clock signal as well as a receiver circuit in an embodiment of the present invention.

A "memory subsystem" is a plurality of memory devices, which may be interconnected with an integrated circuit device (e.g., a buffer device) providing access between the memory devices and an overall system, for example, a computer system. It should be noted that a memory system is distinct from a memory subsystem in that a memory system may include one or more memory subsystems. A "memory module" or simply just "module" denotes a substrate package housing or structure having a plurality of memory devices employed with a connector interface. For example, a memory module may be included in a single unitary package, as in a "system in package" ("SIP") approach. In one type of SIP approach, the module may include a series of integrated circuit dies (i.e., memory devices and buffer device) stacked on top of one another and coupled via conductive interconnect. Solder balls or wire leads may be employed as the connector interface such that the module may be fixedly attached to a printed circuit board substrate. The connector interface may also be of a physically separable type that includes, for example, male and female portions such that the module is detachable from the rest of the system. Another SIP approach may include a number of memory devices and buffer device disposed, in a two dimensional arrangement, on a common substrate plane and situated inside a single package housing.

It follows from these definitions that a memory module having a buffer device (e.g., having a configurable width) isolating data, control, and address signals of the memory devices from the connector interface may be a memory subsystem. As referred to herein, the term "buffer device" may be interchangeable with "configurable width buffer device", although this does not expressly imply that a "buffer device" must have a "configurable width" feature.

A connector interface as described herein, such as a memory module connector interface, is not limited to physically separable interfaces where a male connector or interface engages a female connector or interface. A connector interface also includes any type of physical interface or connection, such as an interface used in a SIP where leads, solder balls or connections from a memory module are soldered to a circuit board. For example, in the stacked die approach, a number of integrated circuit die (i.e., memory devices and buffer device) may be stacked on top of one another with a substrate forming the base and interface to a memory controller or processor via a ball grid array type of connector interface. As another example, the memory devices and buffer device may be interconnected via a flexible tape interconnect and interface to a memory controller via one of a ball grid array type connector interface or a physically separable socket type connector interface.

With reference to FIGS. **3**A and **3**B, block diagrams of a memory system according to embodiments of the present invention are illustrated. Memory systems **300** and **305** include a controller **310**, a plurality of point-to-point links **320***a*–**320***n*, and a plurality of memory subsystems **330***a*–**330***n*. For simplicity, a more detailed embodiment of memory subsystem **330***a* is illustrated as memory subsystem **340**. Buffer device **350** and a plurality of memory devices **360** are disposed on memory subsystem **340**. Buffer device **350** is coupled to the plurality of memory devices **360** via channels **370**. Interface **375** disposed on controller **310** includes a plurality of memory subsystem ports **378***a*–**378***n*. A "port" is a portion of an interface that serves a congruent I/O functionality. The memory subsystem ports **378***a*–**378***n* may be included as a portion of a configurable width interface, for example as is described in some of the embodiments below.) One of memory subsystem ports **378***a*–**378***n* includes I/Os, for sending and receiving data, addressing and control information over one of point-to-point links **320***a*–**320***n*.

According to an embodiment of the present invention, at least one memory subsystem is connected to one memory subsystem port via one point-to-point link. The memory subsystem port is disposed on the memory controller interface, which includes a plurality of memory subsystem ports, each having a connection to a point-to-point link. In other embodiments, memory subsystems are connected to a memory subsystem port via a bus (i.e., a plurality of signal lines). A combination of bus and point-to-point connections may be used to connect the memory subsystem ports to each memory subsystem, for example, point-to-point links may be employed to transport data between the memory subsystem ports and each memory subsystem, and one or more busses may be used to transport control and/or addressing information between the memory subsystem ports and each memory subsystem.

A dynamic point-to-point topology may also be employed to connect the memory subsystem port to each of the memory subsystems. A dynamic point-to-point topology includes a first plurality of point-to-point connections between the memory controller and a first memory module and a second plurality of point-to-point connections between the memory controller and the second memory module in a first configuration. For example, when the second memory module is removed from the system and a second configuration is desired, the plurality of point-to-point connections are routed to the first memory module to retain system bandwidth between memory modules and the controller or increase the bandwidth to the first memory module. The routing may be performed in a number of ways including using a continuity module or switches. In an embodiment, a configurable width buffer device disposed on the first memory module provides the flexibility to configure the width of the first memory module to accept switch between the first and second configurations. That is the configurable width buffer device may provide the flexibility to configure the module to connect to the first plurality of point-to-point connections in the first configuration and to connect to the second plurality of point-to-point links in the second configuration.

In FIG. **3**A, point-to-point links **320***a*–**320***n*, memory subsystems **330***a*–**330***c* (including mating connectors **380***a*–*n*), and controller **310**, are incorporated on a common substrate (not shown) such as a wafer or a printed circuit

board (PCB) in memory system **300**. In an alternate embodiment, memory subsystems are incorporated onto individual substrates (e.g., PCBs). The memory subsystems are then fixedly attached to a single substrate that incorporates point-to-point links **320***a*–**320***n* and controller **310**. In another alternate embodiment illustrated in FIG. **3**B, memory subsystems **330***a*–**330***c* are incorporated onto individual substrates that include connectors **390***a*–**390***c* to support upgradeability in memory system **305**. Corresponding mating connectors **380***a*–**380***n* are connected to a connection point of each point-to-point link **320***a*–**320***n*. Each of mating connectors **380***a*–**380***n* interface with connectors **390***a*–**390***c* to allow removal/inclusion of memory subsystems **330***a*–**330***c* in memory system **305**. In one embodiment, mating connectors **380***a*–**380***n* are sockets and connectors **390***a*–**390***c* are edge connectors disposed on an edge of each memory subsystems **330***a*–**330***c*. Mating connectors **380***a*–**380***n*, are attached to a common substrate shared with point-to-point links **320***a*–**320***n* and controller **310**.

With further reference to FIGS. **3**A and **3**B, buffer device **350** transceives and provides isolation between signals interfacing to controller **310** and signals interfacing to the plurality of memory devices **360**. In a normal memory read operation, buffer device **350** receives control, and address information from controller **310** via point-to-point link **320***a* and in response, transmits corresponding signals to one or more, or all of memory devices **360** via channels **370**. One or more of memory devices **360** may respond by transmitting data to buffer device **350** which receives the data via one or more of channels **370** and in response, transmits corresponding signals to controller **310** via point-to-point link **320***a*. Controller **310** receives the signals corresponding to the data at corresponding ports **378***a*–**378***n*. In this embodiment, memory subsystems **330***a*–**330***n* are buffered modules. By way of comparison, buffers disposed on the conventional DIMM module in U.S. Pat. No. 5,513,135 are employed to buffer or register control signals such as RAS, and CAS, etc., and address signals. Data I/Os of the memory devices disposed on the DIMM are connected directly to the DIMM connector (and ultimately to data lines on an external bus when the DIMM is employed in memory system **100**).

Buffer device **350** provides a high degree of system flexibility. New generations of memory devices may be phased in with controller **310** or into memory system **300** by modifying buffer device **350**. Backward compatibility with existing generations of memory devices (i.e., memory devices **360**) may also be preserved. Similarly, new generations of controllers may be phased in which exploit features of new generations of memory devices while retaining backward compatibility with existing generations of memory devices.

Buffer device **350** effectively reduces the number of loading permutations on the corresponding point-to-point link to one, thus simplifying test procedures. For example, characterization of a point-to-point link may involve aspects such as transmitters and receivers at opposite ends, few to no impedance discontinuities, and relatively short interconnects. By way of contrast, characterization of control/address bus **130** (see FIG. **1**) may involve aspects such as multiple transmit and receive points, long stub lines, and multiple load configurations, to name a few. Thus, the increased number of electrical permutations tends to add more complexity to the design, test, verification and validation of memory system **100**.

With further reference to FIG. **3**B an exemplary system that uses configurable width modules coupled in a dynamic point-to-point configuration may be described. In this exemplary embodiment, each of memory subsystems **330***a*–**330***c* is a buffered memory module having a configurable width interface. In this embodiment, system capacity may scale without compromising performance when memory modules are added to the system to increase total memory capacity. For example, memory system may be populated with a single buffered memory module located, for example in mating connector **380***a* (e.g., a socket connector), thus leaving point to-point links **320***b*–**320***n* coupled to unpopulated mating connectors **380***b*–**380***n*. In this configuration, point-to-point links **320***b*–**320***n* may be routed to access the single buffered memory module located in mating connector **380***a* and routed using electrical or mechanical switches. The single buffered memory module located in mating connector **380***a* is programmed to include an interface width that may accommodate the routed point-to-point links **320***b*–**320***n*. U.S. patent application Ser. No. 09/797,099, (the Upgradeable Application") entitled "Upgradeable Memory System with Reconfigurable Interconnect," filed on Feb. 28, 2001, which application is incorporated by reference herein and which application is assigned to the owner of the present application, describes a configurable memory module that is used in embodiments of the present invention to provide a dynamic point-to-point configuration. In particular, the configurable memory module taught by the Upgradeable Application is used with a configurable buffer device **391**, as described below, in embodiments of the present invention. In a point-to-point system, the minimum number of links per memory module is limited by the number of memory devices in a memory module that does not include a buffer device, but can be as low as one link for a memory module having a configurable width buffer device **391**. Because memory modules having configurable width buffer devices allow for fewer links per memory module, more memory modules can be supported for a particular number of links from a master device.

FIG. **3**C shows an example of a configurable width buffered module **395** that can be used in conjunction with the system described above. Configurable width buffered module **395** includes memory devices **360**, channels **370**, configurable width buffer device **391** and connector **390**. Configurable width buffered module **395** is configurable or programmable such that information may be transferred using different numbers of interface connections **390***a* in connector **390** provided by configurable width buffer device **391**. In an embodiment of the present invention, interface connections **390***a* includes a plurality of contacts, conducting elements or pins. In an embodiment illustrated by FIG. **3**C, there are four possible configurations for configurable width buffer device **391**. As used in the circuit described above, however, each module will be configured in one of two ways: (a) to use its full set of available interface connections **390***a*, or (b) to use only a limited subset (half in the described example) of its interface connections **390***a*.

In the following discussion, the modules' alternative configurations, and in particular the configurable width buffer device **391** alternate configurations, are referred to as having or using different "widths". However, it should be noted that the capacities of the memory modules may or may not change with the different data widths, at least in an embodiment of the present invention. A module's full set of data stored on the associated memory devices is available regardless of the buffer interface width being used. With wider interface widths, different subsets of memory devices and memory cells may be accessed through different sets of interface connections. With narrower data or interface widths, the different subsets of memory devices and memory

cells are accessed through a common set of interface connections. At such narrower interface widths, larger addressing ranges may be used to access data from one or more of the memory devices.

Configurable width buffered module **395** includes at least one memory device **360***a*, of memory devices **360**, that receive and transmit data bit signals through channels **370** (e.g., a plurality of signal lines). In the described embodiment, memory devices **360** are discretely packaged Synchronous type DRAM integrated circuits (ICs), for example, DDR memory devices, Direct Rambus® memory devices (DRDRAM), or "XDR™" memory devices, although the memory devices might be any of a number of other types, including but not limited to SRAM, FRAM (Ferroelectric RAM), MRAM (Magnetoresistive or Magnetic RAM), Flash, or ROM. singly or in combination.

In the embodiment illustrated in FIG. **3**A, buffered modules added to upgrade memory system **300** (e.g., increase memory capacity) are accommodated by independent point-to-point links. Relative to a bussed approach, system level design, verification and validation considerations are reduced, due to the decreased amount of module interdependence provided by the independent point-to-point links. Additionally, the implementation, verification and validation of buffered modules may be performed with less reliance on system level environment factors.

Several embodiments of point-to-point links **320***a*–**320***n* include a plurality of link architectures, signaling options, clocking options and interconnect types. Embodiments having different link architectures include simultaneous bi-directional links, time-multiplexed bi-directional links and multiple unidirectional links. Voltage or current mode signaling may be employed in any of these link architectures.

Clocking methods employed in the synchronization of events in point-to-point link or bussed topologies include any of globally synchronous clocking (i.e., where a single clock frequency source is distributed to various devices in the system); source synchronous clocking (i.e., where data is transported alongside the clock from the source to destination such that the clock and data become skew tolerant) and encoding the data and the clock together. In one embodiment, differential signaling is employed and is transported over differential pair lines. In alternate embodiments, one or more common voltage or current references are employed with respective one or more current/voltage mode level signaling. In yet other embodiments, multi-level signaling-where information is transferred using symbols formed from multiple signal (i.e., voltage/current) levels is employed.

Signaling over point-to-point links **320***a*–**320***n* or alternatively, over bussed topologies, may incorporate different modulation methods such as non-return to zero (NRZ), multi-level pulse amplitude modulation (PAM), phase shift keying, delay or time modulation, quadrature amplitude modulation (QAM) and Trellis coding. Other signaling methods and apparatus may be employed in point-to-point links **320***a*–**320***n*, for example, optical fiber based apparatus and methods.

The term "point-to-point link" denotes one or a plurality of signal lines, each signal line having only two transceiver connection points, each transceiver connection point coupled to transmitter circuit, receiver circuit or transceiver circuit. For example, a point-to-point link may include a transmitter coupled at or near one end and a receiver coupled at or near the other end. The point-to-point link may be synonymous and interchangeable with a point-to-point connection or a point-to-point coupling.

In keeping with the above description, the number of transceiver points along a signal line distinguishes between a point-to-point link and a bus. According to the above, the point-to-point link consists of two transceiver connection points while a bus consists of more than two transceiver points.

One or more terminators (e.g., a resistive element) may terminate each signal line in point-to-point links **320***a*–**320***n*. In several embodiments of the present invention, the terminators are connected to the point-to-point link and situated on buffer device **350**, on a memory module substrate and optionally on controller **310** at memory subsystem ports **378***a*–**378***n*. The terminator(s) connect to a termination voltage, such as ground or a reference voltage. The terminator may be matched to the impedance of each transmission line in point-to-point links **320***a*–**320***n*, to help reduce voltage reflections. Signal lines of bussed topologies may also benefit from terminating end points or connection points where devices, such as buffer devices connect to those signal lines.

In an embodiment of the present invention employing multi-level PAM signaling, the data rate may be increased without increasing either the system clock frequency or the number of signal lines by employing multiple voltage levels to encode unique sets of consecutive digital values or symbols. That is, each unique combination of consecutive digital symbols may be assigned to a unique voltage level, or pattern of voltage levels. For example, a 4-level PAM scheme may employ four distinct voltage ranges to distinguish between a pair of consecutive digital values or symbols such as 00, 01, 10 and 11. Here, each voltage range would correspond to one of the unique pairs of consecutive symbols.

With reference to FIGS. **4**A, **4**B and **4**C, buffered memory modules according to embodiments of the present invention are shown. Modules **400** and **450** include buffer device **405** and a plurality of memory devices **410***a*–**410***h* communicating over a pair of channels **415***a* and **415***b*. In these embodiments channel **415***a* communicates to memory devices **410***a*–**410***d* and channel **415***b* communicates to memory devices **410***e*–**410***h*.

In an embodiment, channels **415***a* and **415***b* consist of a plurality of signal lines in a relatively short multi-drop bus implementation. The plurality of signal lines may be controlled impedance transmission lines that are terminated using respective termination elements **420***a* and **420***b*. Channels **415***a* and **415***b* are relatively short (i.e., are coupled to relatively few memory devices relative to a conventional memory system, for example see FIGS. **2**A and **2**B) and connect to an I/O interface (not shown) of each memory device via a short stub. Signal lines of channels **415***a* and **415***b* include control lines (RQ), data lines (DQ) and clock lines (CFM, CTM). The varieties of interconnect topologies, interconnect types, clocking methods, signaling references, signaling methods, and signaling apparatus described above in reference to point-to-point links **320***a*–**320***n* may equally apply to channels **415***a* and **415***b*.

In accordance with an embodiment of the present invention, control lines (RQ) transport control (e.g., read, write, precharge . . . ) information and address (e.g., row and column) information contained in packets. By bundling control and address information in packets, protocols required to communicate to memory devices **410***a*–**410***h* are independent of the physical control/address interface implementation.

In alternate embodiments, control lines (RQ) may comprise individual control lines, for example, row address

strobe, column address strobe, etc., and address lines. Individual point-to-point control and address lines increase the number of parallel signal connection paths, thereby increasing system layout resource requirements with respect to a narrow "packet protocol" approach. In one alternate embodiment illustrated in FIG. **6**A, individual device select lines **633***a* and **633***b* are employed to perform device selection. Individual device select lines **633***a* and **633***b* decrease some latency consumed by decoding device identification that normally is utilized when multiple devices share the same channel and incorporate individual device identification values.

Clock lines of channels **415***a* and **415***b* include a terminated clock-to-master (CTM) (i.e., clock to buffer) and clock-from-master (CFM) (i.e., clock from buffer) line. In a source synchronous clocking method, CTM may be transition or edge aligned with control and/or data communicated to buffer device **405** from one or more of memory devices **410***a*–**410***d* in, for example, a read operation. CFM may be aligned with or used to synchronize control and/or data from the buffer to memory in, for example, a write operation.

Although two channels **415***a* and **415***b* are shown in FIG. **4**A, a single channel is also feasible. In other embodiments, more than two channels may be incorporated onto module **400**. It is conceivable that if each channel and memory device interface is made narrow enough, then a dedicated channel between each memory device and the buffer device may be implemented on the module. The width of the channel refers to the number of parallel signal paths included in each channel. FIG. **4**B illustrates a quad-channel module **450** having channels **415***a*–**415***d*. In this embodiment, channels **415***c* and **415***d* are routed in parallel with channels **415***a* and **415***b* to support more memory devices (e.g., 32 memory devices). By incorporating more channels and additional memory devices, module **450** (FIG. **4**B) may be implemented in memory systems that require large memory capacity, for example, in server or workstation class systems.

In alternate embodiments, channels **415***a* and **415***b* may operate simultaneously with channels **415***c* and **415***d* to realize greater bandwidth. By operating a plurality of channels in parallel, the bandwidth of the module may be increased independently of the memory capacity. The advantages of greater bandwidth may be realized in conjunction with larger capacity as more modules incorporated by the memory system **305** (see FIG. **3**B) increase the system memory capacity. In other alternate embodiments, the modules are double sided and channels along with corresponding pluralities of memory devices are implemented on both sides. Using both sides of the module increases capacity or increases bandwidth without impacting module height. Both capacity and bandwidth may increase using this approach. Indeed, these techniques may increase capacity and bandwidth singly or in combination.

Other features may also be incorporated to enhance module **400** in high capacity memory systems, for example, additional memory devices and interface signals for error correction code storage and transport (ECC). Referring to FIG. **4**C, memory devices **410***i* and **410***r* intended for ECC are disposed on module **470**.

In one embodiment, memory devices **410***a*–**410***h* are Rambus® Dynamic Random access Memory (RDRAM) devices operating at a data rate of 1066 Mbits/sec. Other memory devices may be implemented on module **400**, for example, Double Data Rate **2** (DDR**2**) DRAM devices and Synchronous DRAM (SDRAM) devices. Utilizing buffer device **405** between the memory devices and controller in accordance with the present invention (e.g., see FIG. **3**) may feasibly render the type of memory device transparent to the system. Different types of memory devices may be included on different modules within a memory system, by employing buffer device **405** to translate protocols employed by controller **310** to the protocol utilized in a particular memory device implementation.

With reference to FIG. **5**A, a block diagram of a buffer device according to an embodiment of the present invention is illustrated. Buffer device **405** includes interface **510**, interfaces **520***a* and **520***b*, multiplexers **530***a* and **530***b*, request & address logic **540**, write buffer **550**, optional cache **560**, computation block **565**, clock circuit **570***a*–*b* and operations circuit **572**.

In an embodiment, interface **510** couples to external point-to-point link **320** (e.g., point-to-point links **320***a*–**320***n* in FIGS. **3**A and **3**B). Interface **510** includes a port having transceiver **575** (i.e. transmit and receive circuit) that connects to a point-to-point link. Point-to-point link **320** comprises one or a plurality of signal lines, each signal line having no more than two transceiver connection points. One of the two transceiver connection points is included on interface **510**. Buffer device **405** may include additional ports to couple additional point-to-point links between buffer device **405** and other buffer devices on other memory modules. These additional ports may be employed to expand memory capacity as is described in more detail below. Buffer device **405** may function as a transceiver between point-to-point link **320** and other point-to-point links. FIGS. **8**B and **8**C illustrate some buffer-to-buffer connection topology embodiments, while one of ordinary skill in the art would appreciate that there many more embodiments.

In one embodiment, termination **580** is disposed on buffer device **405** and is connected to transceiver **575** and point-to-point link **320**. In this embodiment, transceiver **575** includes an output driver and a receiver. Termination **580** may dissipate signal energy reflected (i.e., a voltage reflection) from transceiver **575**. Termination **580** may be a resistor or capacitor or inductor, singly or a series/parallel combination thereof. In alternate embodiments, termination **580** may be external to buffer device **405**. For example, termination **580** may be disposed on a module substrate or on a memory system substrate.

In another approach, signal energy reflected from transceiver **575** may be utilized in a constructive manner according to an embodiment. By correctly placing a receive point spaced by a distance from the end of point-to-point link **320**, a reflected waveform is summed with an incident waveform to achieve a greater signal amplitude. In this approach, layout space may be saved by eliminating termination **580**. System power may also be saved using this approach since smaller incident voltage amplitude waveforms may be employed. This approach may be equally applicable to the transceiver end of the point-to-point link, or to channels **415***a* and **415***b* (see FIGS. **4**A to **4**C).

With further reference to FIG. **5**A, interfaces **520***a* and **520***b* receive and transmit to memory devices disposed on the module (e.g., see FIGS. **4**A, **4**B and **4**C) via channels. Ports included on interfaces **520***a* and **520***b* connect to each channel. In alternate embodiments of the present invention, interfaces **520***a* and **520***b* include any number of channels e.g., two, four, eight or more channels.

According to an embodiment of the present invention, multiplexers **530***a* and **530***b* perform bandwidth-concentrating operations, between interface **510** and interfaces **520***a* and **520***b*, as well as route data from an appropriate source (i.e. target a subset of channels, internal data, cache or write

buffer). The concept of bandwidth concentration involves combining the (smaller) bandwidth of each channel in a multiple channel embodiment to match the (higher) overall bandwidth utilized in a smaller group of channels. This approach typically utilizes multiplexing and demultiplexing of throughput between the multiple channels and smaller group of channels. In an embodiment, buffer device **405** utilizes the combined bandwidth of interfaces **520***a* and **520***b* to match the bandwidth of interface **510**. Bandwidth concentration is described in more detail below.

Cache **560** is one performance enhancing feature that may be incorporated onto buffer device **405**. Employing a cache **560** may improve memory access time by providing storage of most frequently referenced data and associated tag addresses with lower access latency characteristics than those of the memory devices. Computation block **565** may include a processor or controller unit, a compression/decompression engine, etc, to further enhance the performance and/or functionality of the buffer device. In an embodiment, write buffer **550** may improve interfacing efficiency by utilizing available data transport windows over point-to-point link **320** to receive write data and optional address/mask information. Once received, this information is temporarily stored in write buffer **550** until it is ready to be transferred to at least one memory device over interfaces **520***a* and **520***b*.

A serial interface **574** may be employed to couple signals utilized in initialization of module or memory device identification values, test function, set/reset, access latency values, vendor specific functions or calibration. Operations circuit **572** may include registers or a read-only memory (ROM) to store special information (e.g., vendor, memory device parameter or configuration information) that may be used by the controller. Operations circuit may reduce costs by eliminating the need for separate devices on the module conventionally provided to perform these features (e.g., serial presence detect (SPD) employed in some conventional DIMM modules). An SPD device is a non-volatile memory device included on a memory module. The SPD stores information used by the remainder system to properly configure the memory devices upon boot of the system.

According to an embodiment of the present invention, sideband signals are employed to handle special functions such as reset, initialization and power management functions. In addition, sideband signals may be employed to configure the width of the buffer device. Sideband signals are connected via serial interface **574** and are independent from point-to-point link **320** for handling the special functions. In other embodiments sideband signals are independently coupled to memory devices **410***a*–**410***h* to directly promote initialization, reset, power-up or other functionality independently of buffer device **405**. Other interconnect topologies of sideband signals are possible. For example, sideband signals may be daisy chained between buffer devices and coupled to the memory controller or daisy chained between all memory devices to the memory controller. Alternatively, dedicated sideband signals may be employed throughout.

Clock circuit **570***a*–*b* may include clock generator circuit (e.g., Direct Rambus® Clock Generator), which may be incorporated onto buffer device **405** and thus may eliminate the need for a separate clock generating device. Here, module or system costs may be decreased since the need for a unique clock generator device on the module or in the system may be eliminated. Since reliability to provide adequate clocking on an external device is eliminated, complexity is reduced since the clock may be generated on the buffer device **405**. By way of comparison, some of the conventional DIMM modules require a phase lock loop (PLL) generator device to generate phase aligned clock signals for each memory device disposed on the module. In an embodiment of the present invention, clock circuit **570***a*–*b* is used to resynchronize information transferred by bypass circuits described below.

According to an embodiment of the present invention, clock circuit **570***a*–*b* includes one or more clock alignment circuits for phase or delay adjusting internal clock signals with respect to an external clock (not shown). Clock alignment circuit may utilize an external clock from an existing clock generator, or an internal clock generator to provide an internal clock, to generate internal synchronizing clock signals having a predetermined temporal relationship.

FIG. **5**B illustrates a configurable width buffer device **391** as seen in FIG. **3**C in an embodiment of the present invention. Configurable width buffer device **391** includes like numbered components as shown in FIG. **5**A and, in an embodiment, may operate as described above. Configurable width buffer device **391** also includes configurable width interface **590**, state storage **576**, configurable serialization circuit **591** and interface **596**. In an embodiment, a plurality of contacts, solder balls or pins are included to provide electrical connections between interface **596** and connector **390** (FIG. **3**C) via signal line traces routed on or through out a substrate portion of the module.

Also, in an embodiment of the present invention, one or more transceiver **575** (FIG. **5**B) and termination **580** are associated with each port in interface **596**. In this specific embodiment, transceiver **575** includes a transmit circuit to transmit data onto a signal line (external to configurable width buffer device **391**) and a receiver circuit to receive a data signal on the same signal line. In an alternate embodiment, the transmit circuit is multiplexed with the data received by the receiver circuit. In still a further embodiment of the present invention, the transmit circuit transmits data and the receiver circuit receives data simultaneously.

In another embodiment, the transceiver **575** includes separate unidirectional transmit and receive circuits, each having dedicated resources for communicating data on and off configurable width buffer device **391**. In this embodiment, unidirectional transmitter circuit transmits data onto a first signal line disposed on (external to configurable width buffer device **391**, for example, disposed on configurable width buffered module **395**). In addition, unidirectional receiver circuit receives data from a second signal line.

In another embodiment of the present invention, a transmit circuit transmits a differential signal that includes encoded clock information and a receiver circuit receives a differential signal that includes encoded clock information. In this embodiment, clock and data recovery circuit is included to extract the clock information encoded with the data received by the receiver circuit. Furthermore, clock information is encoded with data transmitted by the transmit circuit. For example, clock information may be encoded onto a data signal, by ensuring that a minimum number of signal transitions occur in a given number of data bits.

In an embodiment of the present invention, any multiplexed combination of control, address information and data intended for memory devices coupled to configurable width buffer device **391** is received via configurable width interface **590**, which may, for example extract the address and control information from the data. For example, control information and address information may be decoded and separated from multiplexed data and provided on lines **595** to request & address logic **540** from interface **596**. The data

may then be provided to configurable serialization circuit **591**. Request & address logic **540** generates one or more output enable (OE) signals to enable bypass circuits as described below.

Interfaces **520***a* and **520***b* include programmable features in embodiments of the present invention. A number of control lines between configurable width buffer device **391** and memory devices are programmable in order to accommodate different numbers of memory devices on a configurable width buffered module **395** in an embodiment of the present invention. Thus, more dedicated control lines are available with increased memory device memory module configuration. Using programmable dedicated control lines avoids any possible load issues that may occur when using a bus to transfer control signals between memory devices and a configurable width buffer device **391**. In another embodiment of the present invention, an additional complement data strobe signal for each byte of each memory device may be programmed at interfaces **520***a* and **520***b* to accommodate different types of memory devices on a configurable width memory module **395**, such as legacy memory devices that require such a signal. In still a further embodiment of the present invention, interfaces **520***a* and **520***b* are programmable to access different memory device widths. For example, interfaces **520***a* and **520***b* may be programmed to connect to 16 "×4" width memory devices, 8 "×8" width memory devices or 4 "×16" width memory devices.

Configurable width buffer device **391** has a maximum buffer device interface width equivalent to the number of data pins or contacts provided on the buffer device's package or interface **596**. In an embodiment of the present invention, interface **596** includes 128 pins of which selectable subsets of 1, 2, 4, 8, 16, 32, 64 or all 128 pins ($W_{DP}$) may be used in order to configure the width of configurable width buffer device **391**. Configurable width buffer device **391** also has a maximum memory device access width defined as the largest number of bits that can be accessed in a single memory device transfer operation to or from configurable width buffer device **391**. Using the techniques described herein, the configurable width buffer device **391** may be programmed or configured to operate at interface widths and memory device access widths other than these maximum values.

In an embodiment illustrated by FIG. **5**B, a serialization ratio is defined as follows:

$$RS=W_A:W_{DP}$$

Where:

$R_S$=Serialization Ratio

$W_A$=Memory Device Access Width

$W_{DP}$=Configured Buffer Device Interface Width

For example, if the memory device access width $W_A$ is 128-bits and the configurable width buffer device interface width $W_{DP}$ is 16-bits, the serialization ratio is 8:1. For the described embodiment, the serialization ratio remains constant for all configured buffer device interface widths, so that the memory device access width scales proportionally with configured buffer device interface width. In other embodiments, the serialization ratio could vary as the configured buffer device interface width varies. In other embodiments, the serialization ratio may change and the memory device access width may remain constant.

Configurable serialization circuit **591** performs serialization and deserialization functions depending upon the desired serialization ratio as defined above. As the memory device access width is reduced from its maximum value, memory device access granularity (measured in quanta of data) is commensurately reduced, and an access interleaving or multiplexing scheme may be employed to ensure that all storage locations within memory devices **360** can be accessed. The number of signal lines of channels **370** may be increased or decreased as the memory device access width changes. Channels **370** (FIG. **3**C) may be subdivided into several addressable subsets. The address of the transaction will determine which target subset of channels **370** will be utilized for the data transfer portion of the transaction. In addition, the number of transceiver circuits included in interface **520***a* and **520***b* that are employed to communicate with one or more memory devices may be configured based on the desired serialization ratio. Typically, configuration of the transceivers may be effectuated by enabling or disabling how many transceivers are active in a given transfer between one or more memory devices and configurable width buffer device **391**.

In an embodiment of the present invention, a serialization ratio SR between a primary channel and secondary channels is defined below. In an embodiment of the present invention, communications between primary (e.g. link or bus) and secondary channels (e.g. channel **370** having a plurality of signal lines) have matched bandwidth (i.e. no compression, coding/ECC overhead, or caching).

$$SR=BW_P:BW_S$$

where:

$BW_P$=bandwidth of primary channel (bits/sec/signal line)

$BW_S$=bandwidth of secondary channel (bits/sec/signal line)

The minimum number of secondary channel signal lines required to participate per transaction between primary and secondary channels is:

$$W_{DPT,S}=W_{DP,P}*SR$$

where:

$W_{DP,P}$=programmed data path width for primary channel

$W_{DP,S}$=total data path width for secondary channel

$W_{DPT,S}$=minimum number of secondary channel signal lines required to participate in each transaction

If the total number of secondary channel signal lines per configurable width buffer device **391**, $W_{DP,S}$ is greater than the minimum number required per transaction, $W_{DPT,S}$, then configurable width buffer device **391** may employ a configurable datapath router within interface **590** to route requests between the primary channel and the target subset of secondary channel signal lines for each transaction. According to a preferred embodiment, the target subset of secondary channel signal lines may be selected via address bits provided as part of the primary channel request. By accessing a subset of secondary channel signal lines per transaction, a number of benefits may be derived. One of these benefits is reduced power consumption. Another benefit is higher performance by grouping memory devices into multiple independent target subsets (i.e. more independent banks).

Operations circuit **572** (similarly, as described above) is included in configurable width buffer device **391** in an embodiment of the present invention. Operations circuit **572** includes storage circuit to store information used by the system in which the configurable width buffer device **391** is situated in, for example, to perform configuration operations. Alternatively the information may be stored in a serial presence detect device (SPD). Alternatively, the information may be stored in a number of different physical locations, for example, in a register within a memory controller or a separate integrated circuit on a system motherboard. Operations circuit **572** may store information representing a pos-

sible number of configurations of configurable width buffer device **391** and/or configurable width buffered module **395** in embodiments of the present invention. Other information, which may be stored includes, but is not limited to memory device parameters, such as access times, precharge times, setup and hold times, allowable skew times, etc. The functionality of operations circuit **572** may be included on an SPD device for example, an EEPROM device, that is readable by the system, such as a controller, to determine the capabilities of a configurable width buffer device **391** and/or configurable width buffered module **395**. A controller can then initialize or set system parameters, such as a data path or interface width, based on the values stored in the SPD device by generating control signals to a control terminal of configurable width buffered module **395**. For example, the SPD device may indicate to a controller that configurable width buffer device **391** has a maximum width of 64 as opposed to a maximum width of 128. In an alternate embodiment of the present invention, the SPD device stores a number of serialization ratios, for example, which may be programmed into a register, located on configurable width buffer device **391**.

State storage **576** may store a value that is repeatedly programmable or changeable to indicate different buffer device interface widths. The value stored in state storage **576** may be decoded to establish the desired configuration of configurable width interface **590**. In addition, state storage may store a plurality of values, for example, a first value that represents the desired width of configurable width interface **590**, and a second value that represents the desired width of one or more of interfaces **520***a* and **520***b*.

State storage may be programmed upon initialization by a controller device that communicates, to the configurable width buffer device, a value, which corresponds to the width of controller. The configurable width buffer device **391** may also automatically detect what the width of the interface of the controller device is upon power-up and set it's own value in state storage **576** accordingly.

In an embodiment of the present invention as illustrated by FIG. **5**B, state storage **576** is a programmable register comprising two programmable memory cells, latches, or other mechanisms for storing state information. Within the two cells, two bits are stored. The two bits can represent four different values, through different combinations of bit values (Ex: 00=×1, 01=×2, 10=×4, 11=×8). The different stored values correspond to different programmed buffer device widths. In an embodiment of the present invention, state storage **576** outputs to request & address logic **540** and configurable width interface **590**. In FIG. **5**B, a state storage **576** is fabricated within each of configurable width buffer device **391**. However, state storage **576** can alternatively be located in a number of different physical locations. For example, stage storage **576** might be a register within a memory controller or on a system motherboard. If the storage register is external to configurable width buffer device **391**, the width selection information is communicated to configurable width buffer device **391** via electrical signals propagated through module connector **390**. In an alternate embodiment of the present invention, a controller transfers width selection information by way of control signals to a control terminal of configurable width buffer device **391**.

Various types of state storage are possible. In the described embodiment, the state storage takes the form of a width selection register or latch. This type of state can be easily changed via software during system operation, allowing a high degree of flexibility, and making configuration operations that are transparent to the end user. However, other types of state storage are possible, including but not limited to manual jumper or switch settings and module presence detection or type detection mechanisms. The latter class of mechanisms may employ pull-up or pull-down resistor networks tied to a particular logic level (high or low), which may change state when a module is added or removed from the system.

State storage **576** can be repeatedly programmed and changed during operation of configurable width buffer device **391** to indicate different interface widths. Changing the value or values of state storage **576** changes the interface width of configurable width buffer device **391**; even after configurable width buffer device **391** has already been used for a particular width. In general, there is no need to power-down or reset configurable width buffer device **391** when switching between different interface widths, although this may be required due to other factors.

There are many possible ways to implement a state storage **576**. Commonly, a register is defined as a state storage **576** that receives a data input and one or more control inputs. The control inputs determine when the storage node within the register will sample the data input. Some time after the register has sampled the input data, which data will appear on the output of the register.

The term register may apply either to a single-bit-wide register or multi-bit-wide register. In general, the number of bits in the width selection register is a function of the number of possible widths supported by the memory device, although there are many possible ways to encode this information.

FIG. **5**C illustrates another embodiment of configurable width interface **590** shown in FIG. **5**B. FIG. **5**C illustrates a multiplexer/demultiplexer circuit **597**, for example that may be disposed in configurable serialization circuit **591** (FIG. **5**B) to perform multiplexing/demultiplexing functions. For the embodiment illustrated by FIG. **5**C, the serialization ratio is 1:1. Serialization ratios greater than 1:1 are possible with the addition of serial-to-parallel (e.g., during write operations, for data intended to be written to the memory devices) and parallel-to-serial (e.g., during read operations, for data read from the memory device to be provided to the controller device) conversion circuits.

Multiplexer/demultiplexer circuit **597** includes four pairs of read and write data line pairs **594***a–d* coupled, by way of configurable width buffer device **391**, to respective memory devices **360**. In an alternate embodiment of the present invention, data line pairs **594***a–d* are coupled to a memory array in a memory device **360***a* by way of configurable width buffer device **391**.

Generally, multiplexer/demultiplexer circuit **597** contains multiplexing logic and demultiplexing logic. The multiplexing logic is used during read operations, and the demultiplexing logic is used during write operations. The multiplexing logic and demultiplexing logic are designed to allow one, two, or four (0–3) buffer device connections or pins in interface **596** to be routed to memory devices, and in particular individual memory cells.

In the one-bit wide configuration, buffer device data connection **0** can be routed to/from any of the four data line pairs **594***a–d*, which may be coupled to respective memory devices or memory cells in a memory device. In the 2-bit wide configuration, buffer device data connections **0** and **1** can be routed to/from data line pairs **594***a–b* or **594***c–d*, respectively. In the 4-bit wide configuration, buffer device data connections **0**, **1**, **2**, and **3** route straight through to/from data line pairs **594***a–d*, respectively.

Likewise, further data paths may be constructed to couple greater than four configurable width buffer device **391** data connections in an embodiment of the present invention.

Multiplexer/demultiplexer circuit **597** includes input and output latches **597***f–m*, two for each configurable width buffer device data connection in interface **596**. Multiplexer/demultiplexer circuit **597** also comprises five multiplexers **597***a–e*. Multiplexers **597***a–d* are two-input multiplexers controlled by a single control input. Multiplexer **597***e* is a four input multiplexer controlled by two control inputs.

Multiplexer/demultiplexer circuit **597** is configured to use two write control signals $W_A$ and $W_B$, and two read control signals $R_A$ and $R_B$. These signals control multiplexers **597***a–e*. They are based on the selected data path width and bits of the requested memory address or transfer phase (see FIG. **5**D, described below). State storage **576** (FIG. **5**B) produces these signals in response to the programmed data width, whether the operation is a read or write operation, and appropriate addressing information.

FIG. **5**D shows the control values used for data path widths of one, two, and four. FIG. **5**D also indicates which of interface **596** connections are used for each data width.

When a width of one is selected during a read operation, the circuit allows data from any one of the four data line pairs **594***a–d* (in particular, the read line) to be presented at interface **596** connection **0**. Control inputs $R_A$ and $R_B$ determine which of data bit signals will be presented at any given time. $R_A$ and $R_B$ are set (at this data width) to equal the least significant two bits ($A_1$, $A_0$) of the memory address corresponding to the current read operation.

When a width of one is selected during a write operation, the circuit accepts the data bit signal from interface **596** data connection **0** and routes it to all of the four data line pairs **594***a–d* (in particular, the write lines), simultaneously. Control inputs $W_A$ and $W_B$ are both set to a logical value of one to produce this routing.

When a width of two is selected during a read operation, the circuit allows any two of the four data bit signals associated with data line pairs **594***a–d* (in particular, the read lines) to be present at interface **596** connections **0** and **1**. To obtain this result, $R_A$ is set to 0, and $R_B$ is equal to the lower bit ($A_0$) of the memory address corresponding to the current read operation. $R_B$ determines which of two pairs of data bit signals (**594***a* and **594***b* or **594***c* and **594***d*) are presented at interface **596** connections **0** and **1** during any given read operation.

When a width of two is selected during a write operation, the circuit accepts the data bit signals from interface **596** connections **0** and **1**, and routes them either to data line pairs **594***a* and **594***b* (in particular, write lines), or to data line pairs **594***c* and **594***d* (in particular, write lines). $W_A$ and $W_B$ are set to 0 and 1, respectively, to obtain this result.

When a width of four is selected by setting all of the control inputs ($R_A$, $R_B$, $W_A$, and $W_B$) to 0, read and write data signals are passed directly between data line pairs **594***a–d* and corresponding interface **596** data connections **3–0**.

The circuit of FIG. **5**C is just one example out of many possible embodiments of the present invention. At the expense of increased logic and wiring complexity, an embodiment of the present invention uses a more elaborate crossbar-type scheme that could potentially route any single data bit signal to any data pair line or to any of the interface **596** data connections. In still further embodiments of the present invention, the number and width of memory devices, number of buffer device data connections per buffer device, serialization ratios, and width of data paths may be varied, singly or in combination, from the exemplary numbers and widths provided in describing particular embodiments of the present invention.

In embodiments of the present invention, a master device, such as memory controller **110**, includes configurable width interface **590**, as described herein, to access at least one configurable width buffered module.

In embodiments of the present invention, interfaces **520***a* and **520***b* include multiplexer/demultiplexer circuit **597**, also known as a type of partial crossbar circuit, for transferring signals between configurable width buffer device **391** and memory devices on configurable width buffered module **395**. In an alternate embodiment of the present invention, a full crossbar circuit is used.

FIG. **5**E illustrates a configurable width buffered module **650** including a configurable width buffer device **651** coupled to memory devices **652** and **653** in an embodiment of the present invention. Memory devices **652** and **653** include memory cells **652***a–b* and **653***a–b*, respectively.

Channels DQ**1** and DQ**2** are coupled to configurable width buffered module **650** at a connector interface that includes at least a first contact and a second contact, and in particular to configurable width buffer device **651**. Channels DQ**1** and DQ**2** include a plurality of signal lines for providing signals to and from configurable width buffered module **650**. In an alternate embodiment of the present invention, a single or more channels are coupled to configurable width buffered module **650**. In an embodiment of the present invention, channels DQ**1** and DQ**2** are coupled to a master device, such as a controller.

Channels DQ**3** and DQ**4** are also coupled to configurable width buffer device **651** and are positioned in configurable width buffered module **650** in an embodiment of the present invention. Channels DQ**3** and DQ**4** couple configurable width buffer device **651** to memory devices **652** and **653**. Channels DQ**3** and DQ**4** include a plurality of signal lines for providing signals to and from memory devices **652** and **653**, and in particular memory cells **652***a–b* and **653***a–b*. In an alternate embodiment of the present invention, a single or more channels are coupled to memory devices **652** and **653**. In alternate embodiments of the present invention, more or less memory devices are included in configurable width buffered module **650**.

Configurable width buffer device **651** includes a plurality of transceiver circuits **651***a–f* capable of transmitting and receiving signals on channels DQ**1–4**. Each transceiver circuit **651***a–f* includes a transmitter circuit and a receiver circuit in an embodiment of the present invention. Transceiver **651***a* is coupled to channel DQ**1** and provides signals on channel DQ**3**. Transceiver **651***b* is coupled to channel DQ**3** and provides signals on channel DQ**1**. Transceiver **651***c* is coupled to channel DQ**1** and provides signals on channel DQ**4**. Transceiver **651***d* is coupled to channel DQ**4** and provides signals on channel DQ**1**. Transceiver **651***e* is coupled to channel DQ**2** and provides signals on channel DQ**4**. Transceiver **651***f* is coupled to channel DQ**4** and provides signals on channel DQ**2**. Both memory cells **652***a* and **652***b* are not accessed via channel DQ**1** during a single access operation in an embodiment of the present invention.

In an embodiment of the present invention, configurable width buffered module **650** operates in at least two modes of operation. In a first mode of operation, memory cell **652***a* and memory cell **652***b* in memory device **652** are accessible from a first contact coupled to channel DQ**1**. In particular, signals are transferred between channel DQ**1** and memory cell **652***a* by using transceiver **651***a*, transceiver **651***b* and channel DQ**3**. Transceiver **651***a* is used to write data signals

to memory cell **652***a* and transceiver **651***b* is used to read data signals from memory cell **652***a*. Signals are transferred between channel DQ**1** and memory cell **652***b* using transceiver **651***c*, transceiver **651***d* and channel DQ**4**. Transceiver **651***c* is used to write data signals to memory cell **652***b* and transceiver **651***d* is used to read data signals from memory cell **652***b*.

In a second mode of operation, memory cell **652***a* and memory cell **652***b* in memory device **652** are accessible from a first contact coupled to channel DQ**1** and a second contact coupled to channel DQ**2**, respectively. In particular, signals are transferred between channel DQ**1** and memory cell **652***a* by using transceiver **651***a*, transceiver **651***b* and channel DQ**3**. Transceiver **651***a* is used to write data signals to memory cell **652***a* and transceiver **651***b* is used to read data signals from memory cell **652***a*. Signals are transferred between channel DQ**2** and memory cell **652***b* using transceiver **651***e*, transceiver **651***f* and channel DQ**4**. Transceiver **651***e* is used to write data signals to memory cell **652***b* and transceiver **651***f* is used to read data signals from memory cell **652***b*. In another embodiment of the present invention, memory device **653** is also coupled to channels DQ**3** and DQ**4** and includes memory cells **653***a* and **653***b* that are likewise accessible in at the two modes of operation described above.

FIG. **5**F illustrates a configurable width buffered module **660** where channel DQ**3** is coupled to memory cell **652***a* in memory device **652** and channel DQ**4** is coupled to memory cell **653***b* in memory device **653**. Like referenced components shown in FIG. **5**F operate and are described above in regard to FIG. **5**E. In this embodiment of the present invention, Configurable width buffer device **651** accesses two memory devices that do not share channels DQ**3** and DQ**4**. There are two modes of operation in an embodiment of the present invention. In a first mode of operation, memory cell **652***a* is accessed via channel DQ**1** and memory cell **653***b* is accessed via channel DQ**2**. In a second mode of operation, memory cell **652***a* is accessed via channel DQ**1** and memory cell **653***b* is accessed via channel DQ**1**. Both memory cells **652***a* and **653***b* are not accessed via channel DQ**1** during a single access operation in an embodiment of the present invention. FIG. **5**F conceptually illustrates accessing memory cells by a configurable width buffer device **651**. In order to clearly describe the present invention, one of ordinary skill in the art would appreciate that may components used in a buffer device and memory devices are not shown, such as memory device access logic and transceivers as well as configurable width buffer device **651** logic.

According to embodiments of the present invention, subsets of available memory devices on configurable width buffered module **395** are activated or powered-on during various modes of operation. Thus, configurable width buffered module **395** is able to achieve power savings by only powering particular memory devices.

With reference to FIGS. **6**A, and **6**B, block diagrams of a memory system according to embodiments of the present invention are illustrated. Memory system **600** includes modules **400***a* and **400***b*, controller **610**, and populated primary point-to-point links **620***a* and **620***b*. Unpopulated primary point-to-point links **630** are populated by coupling additional modules (not shown) thereto. The additional modules may be provided to upgrade memory system **600**. Connectors may be disposed at an end of each primary point-to-point link to allow insertion or removal of the additional modules. Modules **400***a* and **400***b* may also be provided with a connector or may be fixedly disposed (i.e., soldered) in memory system **600**. Although only two populated primary point-to-point links are shown in FIG. **6**A, any number of primary point-to-point links may be disposed in memory system **600**, for example, three primary point-to-point links **400***a*–**400***c*, as shown in FIG. **6**B.

With reference to FIG. **7** and FIG. **4**B, a block diagram of a memory system employing a buffered quad-channel module according to an embodiment of the present invention is illustrated. Memory systems **700** incorporate quad-channel modules **450***a*–**450***d*, each coupled via point-to-point links **620***a*–**620***d* respectively.

Referring to FIG. **4**B, buffer device **405** may operate in a bandwidth concentrator approach. By employing quad channels **415***a*–**415***d* on each of modules **450***a*–**450***d*, bandwidth in each module may be concentrated from all quad channels **415***a*–**415***d* on each module to corresponding point-to-point links **620***a*–**620***d*. In this embodiment, throughput on each of point-to-point links **620***a*–**620***d* is concentrated to four times the throughput achieved on each of quad channels **415***a*–**415***d*. Here, each of channels **415***a*–**415***d* transfers information between one or more respective memory devices on each channel and buffer device **405** simultaneously.

Any number of channels **415***a*–**415***d*, for example; two channels **415***c* and **415***d* may transfer information simultaneously and the memory devices on the other two channels **415***a* and **415***b* remain in a ready or standby state until called upon to perform memory access operations. Different applications may have different processing throughput requirements. In addition, the throughput requirements of a particular application may dynamically change during processing. Typically, more power is consumed as throughput is increased as power consumption relates in proportion to operation frequency. The amount of throughput in a system may be implemented on a dynamic throughput requirement basis to save on power consumption. In this embodiment, memory system **700** may concentrate bandwidth as it is required while in operation. For example, memory system **700** may employ only one of channels **415***a*–**415***d* and match throughput to the corresponding point-to-point link. As bandwidth requirements increase, memory system **700** may dynamically activate more of channels **415***a*–**415***d* and increase the throughput on the point-to-point link along with the number of channels accordingly to meet the bandwidth requirements for a given operation.

With reference to FIG. **8**A, a block diagram of a large capacity memory system according to an embodiment of the present invention is illustrated. Memory system **800** includes modules **470***a*–**470***p*, coupled to controller **610** via repeaters **810***a*–**810***d*, primary links **820***a*–**820***d*, and repeater links **830***a*–**830***p*. Primary links **820***a*–**820***d* provide a point-to-point link between controller **610** and a respective repeater **810***a*–**810***d*. In an embodiment of the present invention, each of repeaters **810***a*–**810***d* decode packets transmitted from controller **610** which are then directed over one or more, or none of repeater links **830***a*–*d*, depending on the type of access configured. Each repeater link **830***a*–**830***p* may utilize a point-to-point link configuration. By incorporating, repeated links **830***a*–**830***p* and repeaters **810***a*–**810***d*, a larger number of modules may be accessed and a larger capacity memory system may be realized. Such a large capacity may be suited in a computer server system.

FIG. **8**B illustrates another approach utilized to expand the memory capacity of a memory system in accordance to yet another embodiment. Here, a plurality of buffered modules **850***a*–**850***d* are "daisy chained" via a plurality of

point-to-point links **860***a*–**860***d* to increase the overall memory capacity. Connection points of each point-to-point link are connected to two adjacent buffered modules. Each of buffered modules **850***a*–**850***d* transceive signals between adjacent point-to-point links **860***a*–**860***d*. Point-to-point link **860***a* may be coupled to a controller or another buffered module. Additional point-to-point links may be coupled to a buffer device in a tree configuration approach. For example, three point-to-point links **870***a*–**870***c* each having a single end connected to one buffer device **880** may be employed as shown in FIG. **8**C.

Other point-to-point topologies include a "ring" in which a plurality of buffered modules are connected in a ring by a respective plurality of point-to-point links and a "star" where a plurality of memory modules are connected to a center memory module by a respective plurality of point-to-point links.

In various embodiment of the present invention, point-to-point links are unidirectional, bidirectional or a combination thereof. A unidirectional link transfers a signal in a single direction to or from a connection point. A bidirectional link transfers signals both to and from a connection point.

FIGS. **9**–**20** illustrate a memory system, or portions of a memory system, for allowing an upgrade option for memory modules. In particular, FIGS. **9**–**20** illustrate a memory system including a buffered memory module having at least one bypass circuit that allows for memory module upgrades while reducing memory system delays in accessing information from the memory module upgrades.

FIG. **9** illustrates a memory system **910** including a single buffered memory module having symmetrical bypass circuits (unpopulated or unfilled socket **905**) and a memory system **920** including two buffered memory modules having symmetrical bypass circuits. Memory systems **910** and **920** include substrates **950** and **960**, respectively, for positioning an interface, such as sockets **904** and **905** that may or may not be populated with buffered memory modules **900** and **901**. The choice of populating sockets **904** and **905** with buffered memory modules **900** and **901** may be made at the time of manufacture, or after a memory system has been manufactured.

Memory modules **900** and **901** include a connector interface having contacts, such as pins A**0**, A**1**, B**0** and B**1** that are used to provide signals between memory modules **900** and **901** and sockets **904** and **905**, respectively. Pins A**0**, A**1**, B**0** and B**1**, respectively, represent one or more contacts or pins in embodiments of the present invention.

Data and/or control signals are transferred between buffered modules **900** and **901** by channels DQ**0**, DQ**1**, **911** and **912**. In an alternate embodiment of the present invention, control and/or address signals are transferred on separate signal lines or channels. Channels DQ**0**, DQ**1**, **911** and **912**,respectively, include one or more signal lines in embodiments of the present invention. In an embodiment of the present invention, channels DQ**0**, DQ**1**, **911**, **912** as well as other channels described herein, are unidirectional (information can travel in one direction) and/or bidirectional (information can travel in either direction). Channels DQ**0** and DQ**1** are coupled to a master device, such as memory controller **310** shown in FIG. **3**B, in an embodiment of the present invention. Channel DQ**0** is also coupled to pin A**0** of memory module **900** by way of socket **904**. Channel DQ**1** is also coupled to pin A**1** of memory module **900** by way of socket **904**. Similarly, pin B**0** of memory module **900** is coupled to channel **912** and pin B**1** of memory module **900** is coupled to channel **911**. In memory system **920**, memory module **901** has pins A**0** and A**1** that are also coupled to channels **911** and **912**, respectively, by way of socket **905**. Pins B**0** and B**1** of memory module **901** are not coupled to a channel in an embodiment of the present invention shown in FIG. **9**.

In an embodiment of the present invention, memory modules **900** and **901**, singly or in combination, include a buffer device **930** having bypass circuits **934** and **935** as indicated by the expanded view of buffered memory module **900** shown in FIG. **9**. Bypass circuit **934** is coupled to pins A**0** and B**0**; while bypass circuit **935** is coupled to pins A**1** and B**1**. In an embodiment of the present invention, a bypass circuit, such as bypass circuit **935**, includes a first transmitter ("trans") **935***a* for transmitting signals received on pin A**1** to pin B**1**. Likewise, a bypass circuit also includes a second transmitter **935***b* for transmitting signals received on pin B**1** to pin A**1** and/or multiplexer/demultiplexer ("mux/demux") circuit **931**.

In an embodiment of the present invention, transmitters **935***a* and **935***b* are enabled responsive to one or more OE signals. In an embodiment of the present invention, an OE signal is generated by request & address logic **540** of configurable width buffer device **391**, as shown in FIG. **5**B, responsive to address information on lines **595**.

In an embodiment of the present invention, information transmitted by transmitters **935***a* and **935***b* is resynchronized using clock circuit **570***a*–*b* in configurable width buffer device **391** shown in FIG. **5**B. In an embodiment of the present invention, clock circuit **570***a*–*b* includes one or more clock alignment circuits for phase or delay adjusting internal clock signals with respect to an external clock (not shown). The clock alignment circuit may utilize an external clock from an existing clock generator, or an internal clock generator to provide an internal clock, to generate internal synchronization clock signals for transmitters **935***a* and **935***b* having predetermined temporal relationships that allow for the resynchronization of information transferred between memory modules having bypass circuits. In particular, generated internal synchronization clock signals are used to receive or sample information provided to bypass circuits and drive or transmit information from bypass circuits.

Buffer device **930** also includes mux/demux circuit **931** for selectively connecting pins A**0** and A**1** to memory devices **933**, in particular memory cells, by way of internal channel **932**. Mux/demux circuit **931** corresponds to multiplexer/demultiplexer circuit **597** shown in FIG. **5**C in an embodiment of the present invention. Mux/demux circuit **931** performs transfers between timing slots on pins A**0** and A**1** and memory devices **933**. In a write transfer embodiment of the present invention, mux/demux circuit **931** will receive information from pins A**0** and A**1**, and will retransmit the information to the memory devices **933** where it is written into storage cells. In a read transfer embodiment of the present invention, mux/demux circuit **931** will receive information that is read from storage cells in memory devices **933**, and will retransmit the information onto pins A**0** and A**1**.

Bypass circuits **934** and **935** perform transfers between timing slots on pins A**0** and A**1** and timing slots on pins B**0** and B**1**. In a write transfer embodiment of the present invention, bypass circuits **934** and **935** will receive information from pins A**0** and A**1**, and will retransmit the information onto pins B**0** and B**1**. In a read transfer embodiment of the present invention, mux/demux circuit **931** will receive information from pins B**0** and B**1**, and will retransmit the information onto pins A**0** and A**1**.

In an embodiment of the present invention, bypass circuits **934**, **935** and mux/demux circuit **931** are used in configurable width buffer device **391** shown in FIG. **5**B.

A channel or signal line between master device pins, such as memory controller pins, and the pins A**0**/A**1** of memory module **900** is known as a point-to-point wiring topology. This point-to-point topology has the principle benefit that the parasitic resistance, capacitance, and inductance elements in the controlled impedance path are minimized, maximizing signaling bandwidth.

The signaling bandwidth is kept high by the use of on-component termination elements, which provide a termination resistance that approximates the impedance value of the signal path or line.

One disadvantage of the point-to-point topology is that each signal path must use pins to enter and exit a memory module. So when bypass circuits **934** and **935** are included in buffer device **930**, a delay in the signal path between entry and exit pins is created. This delay increases as memory modules are added to a memory system without using a buffer device with a bypass circuit. Each memory module sees the accumulated delay of all bypass circuits between it and the controller.

FIG. **10**A illustrates the use of address space when using a single memory module **900** and FIG. **10**B illustrates the use of address space when using two memory modules **900** and **901**. When memory module **900** is present, both channels DQ**0** and DQ**1** connect to memory module **900**. When memory modules **900** and **901** are present, channels DQ**0** and DQ**1** connect to memory module **900** and also connect to memory module **901** using the A**0**/B**0** and A**1**/B**1** connection paths of memory module **900**. The address spaces of the modules **900** and **901** can be stacked, with an access to a particular address location involving only the memory devices of either memory module **900** or module **901**.

FIG. **11** illustrates a memory system **1100** having four memory modules **1101**–**1104** coupled to sockets **1105**–**1108** positioned on substrate **1150**. Socket **1105** is coupled to channels DQ**0**–**3** and **1120**. Socket **1106** is coupled to channels **1120** and **1121**. Socket **1107** is coupled to channels **1121** and **1122**. Socket **1108** is coupled to channels **1122**. The cost of increasing the number of upgrade memory modules is that the signal path from a master device coupled to channels DQ**0**–**3** to the furthest memory module **1104** includes more delay.

In an embodiment of the present invention, an upgradeable memory system includes four or more memory modules without creating more delay than is provided by system **920** shown in FIG. **9**. FIG. **12**A illustrates a memory module **1200** that enables the reduced signal path delay in memory systems having four or more memory modules. Memory module **1200** includes a buffer device **1210** with an asymmetrical bypass circuit **1212**. In particular, buffer device **1210** includes mux/demux circuit **1211** that operates similar to mux/demux circuit **931** and a single bypass circuit **1212** coupled to pins A**1** and B**1**. A difference between buffer device **1210** and **930** is that a bypass path is only provided between pins A**1** and B**1**. There is no path between pins A**0** and B**0**. In an embodiment of the present invention, there is not any pin B**0**.

FIGS. **12**A–B also shows the address spaces for the one and two memory module cases with an asymmetrical bypass circuit. The address space for memory module **1200** is the same in memory module **900** shown in FIG. **9**. But in memory modules **1200** and **1201**, the address spaces of the two memory modules are parallel rather than stacked. This means that when an address is accessed, memory devices **933** on memory module **1201** will be used for the transfer timing slots on the channel DQ**1**, and memory devices **933** on module **1200** will by used for the transfer timing slots on channel DQ**0**.

In embodiments of the present invention, some (or all) of the storage locations or cells of memory devices **933** in memory module **1200** or **1201** must be accessible through either channel DQ**0** or DQ**1**, depending upon the number of memory modules present. Mux/demux circuit **1211** in buffer device **1210** manages this accessing of storage locations/cells.

In an embodiment of the present invention, information from memory devices **933** that are accessed through a shorter path (without the bypass circuit) must be delayed at some point so that the access paths are matched. This delay can be added at a master device, or could be added in the mux/demux circuit **1211** of buffer device **1210** in embodiments of the present invention.

When using only memory module **1200** shown in FIG. **12**A, an access to a particular address in memory devices **933** causes a transfer between timing slots on channels DQ**0** and DQ**1** and storage locations in all memory devices **933** on memory module **1200**. Buffer device **1210** handles the multiplexing and demultiplexing needed for performing this transfer.

When using two memory modules **1200** and **1201** (with equal-size storage capacity) shown in FIG. **12**B, an access to a particular address causes a transfer between timing slots on channel DQ**0** and storage locations in half of the memory devices **933** on memory module **1200**, and between timing slots on channel DQ**1** and storage locations in half of the memory devices **933** on memory module **1201**. Buffer device **1210**, and in particular mux/demux **1211**, handles the multiplexing and demultiplexing needed for performing this transfer. Address and control signals from a master device will manage mux/demux **1211** in an embodiment of the present invention.

In an embodiment of the present invention, the address space of memory modules **1200** and **1201**, respectively, is twice as large as the address space of memory module **900**, because only half of the memory devices **933** are being accessed in each transaction.

When memory modules **1300** and **1301**, as shown in FIG. **13**A-B do not have equal storage capacities, then the management of the address space becomes more complicated. For example, when the upgrade memory module **1301** has half the storage capacity of memory module **1300**, the address space increases in size by a factor of 1.5. Accesses to address locations in the first ⅔ of the address space cause transfers from both memory modules **1300** and **1301**.

When the upper ⅓ of the address space is accessed, only memory module **1300** is accessed in an embodiment of the present invention. There are at least two ways in which access can be performed in embodiments of the present invention.

First, the timing slots on channels DQ**0** and DQ**1** are both used by memory module **1300** in an embodiment of the present invention. A master device uses address and control signals to cause memory module **1300** to perform double-width transfers in this region of the address space as illustrated by FIG. **14**A.

Second, the timing slot on channel DQ**0** is filled from memory module **1300**, and the timing slot on channel DQ**1** is not used. A master device knows that access to this part of the address space will be at half the nominal bandwidth, and that the master device performs the appropriate multi-

plexing and demultiplexing to the master device's internal signal paths as shown by FIG. **14**B.

FIG. **15** illustrates a buffered memory module **1500** that can be used in a memory system such that memory module upgrades can be extended to more than two memory modules with no additional bypass delay. Memory module **1500** includes memory devices **933** coupled to buffer device **1501** by channel **932**. Buffer device **1501** includes mux/demux circuit **1502** similar to mux/demux circuit **1211** described above. Channels DQ**0**, DQ**1**, DQ**2**, and DQ**3** are coupled to pins A**0**, A**1**, A**2** and A**3** which are coupled to bypass circuits **1503**, **1504**, **1505**, and **1506**, respectively. Pins B**0**, B**1**, B**2** and B**3** are also coupled to bypass circuits **1503**, **1504**, **1505**, and **1506**, respectively. Accordingly, information may selectively enter on pins A**0**–A**3** and exit on pins B**0**–B**1**.

FIGS. **16**A–D illustrate how a memory module, such as memory module **1500**, is used in a four socket memory system, allowing one, two, three or four memory modules to be inserted, as shown by FIGS. **16**A, **16**B, **16**C and **16**D, respectively.

FIG. **16**A shows a one-module case **1600** where memory module **1601** is coupled to socket **1605** and sockets **1606-08** are unpopulated. Channels DQ**0**, DQ**1**, DQ**2** and DQ**3** are coupled to socket **1605** that has memory module **1601** inserted. Channel **1620** couples socket **1605** to socket **1606**. Channel **1621** also couples socket **1605** to socket **1606**. Channel **1622** couples socket **1605** to socket **1607** and channel **1623** couples socket **1605** to socket **1608**. In a one-module case, an access causes a transfer between a timing slot on all four channels DQ**0**, DQ**1**, DQ**2**, and DQ**3** and storage locations in memory module **1601** (the top socket **1605**).

FIG. **16**B shows a two-module case **1630** where a memory module **1601** and **1602** is coupled to sockets **1605** and **1606**, respectively, and sockets **1607-08** are unpopulated. An access causes a transfer between a timing slot on two channels DQ**2** and DQ**3** and storage locations in memory module **1601** (the top socket **1606**) and between a timing slot on two channels DQ**0** and DQ**1** and storage locations in memory module **1602** (the second socket **1606** from the top).

FIG. **16**C shows a three-module case **1650** where a memory module **1601**, **1602** and **1603** is coupled to sockets **1605**, **1606** and **1607**, respectively, and socket **1608** is unpopulated. An access causes a transfer between a timing slot on two channels DQ**0** and DQ**3** and storage locations in memory module **1601** (the top socket **1605**), between a timing slot on channel DQ**1** and storage locations in memory module **1602** (the second socket **1607** from the top), and between a timing slot on channel DQ**2** and storage locations in memory module **1603** (the third socket **1607** from the top).

FIG. **16**D shows a four-module case **1670** where a memory module **1601**, **1602**, **1603** and **1604** is coupled to sockets **1605**, **1606**, **1607** and **1608**, respectively. An access causes a transfer between a timing slot on channel DQ**0** and storage locations in memory module **1601** (the top socket **1605**), between a timing slot on one channel DQ**1** and storage locations in memory module **1602** (the second socket **1606** from the top), between a timing slot on channel DQ**2** and storage locations in memory module **1603** (the third socket **1607** from the top), and between a timing slot on channel DQ**3** and storage locations in memory module **1604** (the fourth socket **1608** from the top).

Each memory system shown in FIGS. **16**C–D has the same number of bypass delays in a particular signal path as in the two-module case shown in FIGS. **9** and **12**B. However, the four-module case of FIG. **16**D provides greater capacity and more upgrade opportunities. In alternate embodiments of the present invention, more than four modules are used in a memory system.

In various embodiments of the present invention, each memory system shown in FIGS. **16**A–D will have many combinations of memory module storage capacity; i.e. all the memory modules have the same storage capacity, some memory modules have twice the storage capacity of other memory modules, some memory modules have four times the storage capacity of other memory modules, and so forth. In a preferred embodiment, a memory module with the largest storage capacity will be inserted into a higher socket position; i.e. towards the top of FIG. **16**-D. This will enable higher storage capacity memory modules the opportunity to use a larger number of channels.

For some memory module storage capacity combinations, it will be possible to provide uniform access bandwidth across the entire combined address space. For example, for a three-module case shown in FIG. **16**C, if the top memory module **1601** has twice the storage capacity of the other two memory modules **1602** and **1603**, then uniform access bandwidth is available at any address location. This is because memory module **1601** has two timing slots (channels DQ**0** and DQ**3**) for every single timing slot of memory module **1602** (channel DQ**1**) and memory module **1603** (channel DQ**2**).

For some of the storage capacity combinations, it will not be possible to provide uniform access bandwidth across the entire combined address space using the fixed channels shown in FIGS. **16**A–D in an embodiment of the present invention. For example, for the three-module case **1650** shown in FIG. **16**C, if the top memory module **1601** has four times the storage capacity of the other two memory modules **1602** and **1603**, then there will be a bandwidth mismatch when the upper half of memory module **1601** is accessed.

There are at least two ways in which access can be performed in embodiments of the present invention.

First, the timing slots on channels DQ**0**, DQ**1**, DQ**2** and DQ**3** are all filled from memory module **1601** when the address locations in the upper half of memory module **1601** are accessed. This requires that a master device use the address and control signals to cause memory module **1601** to perform double-width transfers in this region of the address space, similar to the two-module case shown in FIG. **14**A.

Second, the timing slots on channels DQ**0** and DQ**3** are filled from memory module **1601**, and the timing slots on channel DQ**1** and DQ**2** are not used. In this embodiment of the present invention, a master device knows that access to this part of the address space will be at half the nominal bandwidth, and that it performs the appropriate multiplexing and demultiplexing to its internal signal paths. This embodiment is similar to the two-module case shown in FIG. **14**B.

FIG. **17**–**20** illustrates coupling external channels such as channels DQ**0**, DQ**1**, **1120** and **1121** to internal channels, such as channel **932**, by a buffer device, such as buffer device **930**, in a buffered memory module in embodiments of the present invention.

FIG. **17** illustrates operation modes of a memory module **1700** that couples external signal lines data **1** and data **2** to internal signal line data A, internal signal line data B and external signal line data **3**. In embodiments of the present invention, memory module **1700** corresponds to memory module **900** or **1200** described above. In embodiments of the present invention, signal lines data **1** and data **2** are included in a single external channel, such as channel DQ**0**, or

respective external channels. In an embodiment of the present invention, external signal line data **3** is included in an external channel that is different than either external signal lines data **1** or data **2**. In still a further embodiment of the present invention, an external signal line is positioned on a memory module substrate between a buffer device and a memory module contact. Likewise, signal lines data A and data B are included in a single internal channel, such as channel **932**, or respective internal channels in embodiments of the present invention.

Memory module **1700** is used as a memory module having a bypass circuit as described herein in an embodiment of the present invention. Memory module **1700** includes memory device **1702** including storage cells Sa and Sb that represents a memory device in memory devices **933** as described herein in an embodiment of the present invention. Likewise, buffer device **1701** represents a buffer device as described herein, such as buffer device **930** or **1210**, in embodiments of the present invention.

In a first mode of operation at a first time, coupling circuit C**1** in buffer device **1701** couples signal line data **1** to storage cell Sa by way of signal line data A and coupling circuit C**2** couples signal line data **2** to storage cell Sb by way of signal line data B. In embodiments of the present invention, coupling circuits C**1** and C**2** include, respectively, a mux/demux circuit, bypass circuit and/or delay circuit, singly or in combination.

In a second mode of operation at a second time, coupling circuit C**1** couples signal line data **1** to storage cell Sa by way of signal line data A and coupling circuit C**2** couples signal line data **2** to signal line data **3**.

In a third mode of operation at a third time, coupling circuit C**1** couples signal line data **1** to storage cell Sb by way of signal line data B and coupling circuit C**2** couples signal line data **2** to signal line data **3**.

FIG. **18** illustrates operation modes of a memory module **1800** that couples external signal lines data **1** and data **2** to internal signal lines data A, internal signal line data B, and external signal line data **3**. In embodiments of the present invention, external signal lines data **1** and data **2** are included in a single external channel, such as channel DQ**0**, or respective external channels. In an embodiment of the present invention, external signal line data **3** is included in an external channel that is different than either external signal lines data **1** or data **2**. In still a further embodiment of the present invention, an external signal line is positioned on a memory module substrate between a buffer device and a memory module contact. Likewise, internal signal lines data A and data B are included in a single internal channel, such as channel **932**, or respective internal channels in embodiments of the present invention. Memory module **1800** is used as a memory module having a bypass circuit as described herein in an embodiment of the present invention. Memory module **1800** includes a memory device **1802** including storage cell Sa and a memory device **1803** including storage cell Sb that represents respective memory devices in memory devices **933** as described herein in an embodiment of the present invention.

Memory module **1800** operates similar to memory module **1700**, as described above, except that two memory devices **1802** and **1803** having respective storage cells Sa and Sb are accessed instead of storage cells from a single memory device.

FIG. **19** illustrates operation modes of a memory module **1900** that couples external signal lines data **1** and data **2** to internal signal line data A, internal signal line data B and external signal line data **3**. In embodiments of the present invention, signal lines data **1** and data **2** are included in a single external channel, such as channel DQ**0**, or respective external channels. In an embodiment of the present invention, external signal line data **3** is included in an external channel that is different than either external signal lines data **1** or data **2**. In still a further embodiment of the present invention, an external signal line is positioned on a memory module substrate between a buffer device and a memory module contact. Likewise, signal lines data A and data B are included in a single internal channel, such as channel **932**, or respective internal channels in embodiments of the present invention. Memory module **1900** is used as a memory module having a bypass circuit as described herein in an embodiment of the present invention. Memory module **1900** includes memory device **1902** including storage cells Sa, Sb and Sc that represents a memory device in memory devices **933** as described herein in an embodiment of the present invention. Likewise, buffer device **1901** represents a buffer device, such as buffer device **930** or **1210**, as described herein in embodiments of the present invention.

In a first mode of operation at a first time, coupling circuit C**1** in buffer device **1901** couples signal line data **1** to storage cell Sa by way of signal line data A and coupling circuit C**2** couples signal line data **2** to storage cell Sb by way of signal line data B.

In a second mode of operation at a second time, coupling circuit C**1** couples signal line data **1** to storage cell Sc by way of signal line data A and coupling circuit C**2** couples signal line data **2** to signal line data **3**.

In a third mode of operation at a third time, coupling circuit C**1** couples signal line data **1** to storage cell Sc by way of signal line data B and coupling circuit C**2** couples signal line data **2** to signal line data **3**.

FIG. **20** illustrates operation modes of a memory module **2000** that couples external signal lines data **1** and data **2** to internal signal line data A, internal signal line data B and external signal line data **3**. In embodiments of the present invention, signal lines data **1** and data **2** are included in a single external channel, such as channel DQ**0**, or respective external channels. In an embodiment of the present invention, external signal line data **3** is included in an external channel that is different than either external signal lines data **1** or data **2**. In still a further embodiment of the present invention, an external signal line is positioned on a memory module substrate between a buffer device and a memory module contact. Likewise, signal lines data A and data B are included in a single internal channel, such as channel **932**, or respective internal channels in embodiments of the present invention. Memory module **2000** is used as a memory module having a bypass circuit as described herein in an embodiment of the present invention. Memory module **2000** includes a first memory device **2002** including storage cells Sa and Sc; and a second memory device **2003** including storage cells Sb and Sd that represent respective memory devices in memory devices **933** as described herein in an embodiment of the present invention. Likewise, buffer device **2001** represents a buffer device, such as buffer device **930** or **1210**, as described herein in embodiments of the present invention.

In a first mode of operation at a first time, coupling circuit C**1** in buffer device **2001** couples signal line data **1** to storage cell Sa by way of signal line data A and coupling circuit C**2** couples signal line data **2** to storage cell Sc by way of signal line data B.

In a second mode of operation at a second time, coupling circuit C**1** couples signal line data **1** to storage cell Sc by way

of signal line data A and coupling circuit C**2** couples signal line data **2** to signal line data **3**.

In a third mode of operation at a third time, coupling circuit C**1** couples signal line data **1** to storage cell Sd by way of signal line data B and coupling circuit C**2** couples signal line data **2** to signal line data **3**.

FIG. **21** illustrates a top view of a memory module **2100** according to an embodiment of the present invention. Memory module **2100** includes a plurality of integrated circuit memory devices **2133** and a buffer device **2130** positioned on or about surface **2150***a* of substrate **2150**. In an embodiment of the present invention, memory devices **2133***a–c*, **2133***g–i* and **2133***j–r* as well as buffer device **2130** is coupled directly to surface **2150***a*.

Memory module **2100** positions at least a portion of one integrated circuit memory device (i.e. memory devices **2133***d–f*) of memory devices **2133** above or with buffer device **2130** in embodiments of the present invention. One or more memory devices **2133***d–f* are integrated, housed or included with buffer device **2130** in a common or single discrete package **2250**, as shown in FIG. **22**, in embodiments of the present invention. Package **2250** is coupled to surface **2150***a* by a connector interface **2251** including a plurality of contacts as described herein. One or more memory devices **2133***d–f* are located above, adjacent or below buffer device **2130** in package **2250** in embodiments of the present invention. One or more memory devices **2133***d–f* are located on a different die or semiconductor substrate than buffer device **2130** or on the same die, but both one or more memory devices **2133***d–f* and buffer device **2130** are included in package **2250**, in embodiments of the present invention.

In an alternate embodiment of the present invention, one or more memory devices **2133***d–f* have their own respective packages and buffer device **2130** has a separate package. In this embodiment of the present invention, one or more discretely packaged memory devices **2133***d–f* are positioned on top or above and connected to a discretely packaged buffer device **2130**.

This packaging architecture enables numerous benefits. First, when using a buffer device **2130** in a memory module, more integrated circuit memory devices may be included in a standard form factor memory module, such as a DIMM. Second, the present packaging architecture allows for a larger or enhanced buffer device **2130** while not reducing the number of memory devices in memory module **2100**. If buffer device **2130** functionality and/or size increases, memory devices will not have to be removed to accommodate a large sized buffer device or one which requires additional interface contacts.

In embodiments of the present invention, buffer device **2130** is a configurable width buffer device, such as configurable width buffer device **391**, as described herein.

In embodiments of the present invention, memory devices **2133** are discretely packaged DRAM devices or other types of memory devices, singly or in combination, described herein. In an alternate embodiment of the present invention, memory devices **2133***d–f* are not discretely packaged and are included in package **2250**. FIG. **22** illustrates a cross section view of memory module **2100** shown in FIG. **21** having memory devices **2133** positioned on both surfaces of substrate **2150**. In an embodiment of the present invention, memory devices **2133***j–r* are positioned on surface **2150***b* of substrate **2150**, memory devices **2133***a–c* and **2133***g–i* are positioned on surface **2150***a* and memory devices **2133***d–f* are positioned on or with buffer device **2130** that is positioned on surface **2150***a* of substrate **2150**. Accordingly, at least eighteen memory devices are positioned on memory module **2100**.

In an alternate embodiment of the present invention, ten memory devices are positioned on surface **2150***b*, 6 memory devices are positioned on surface **2150***a*, and 2 memory devices are positioned on or with buffer device **2130** in a single package.

In embodiments of the present invention, substrate **2150** is a supporting material, printed circuit board, backplane link or wafer.

Memory module **2100** includes a connector interface **2180**, such as a connector interface as described herein, for mating to an unpopulated socket in a memory system. In an embodiment of the present invention, connector interface **2180** includes a plurality of contacts, such as contact **2180***a*, for transferring signals. In embodiments of the present invention, a contact in connector interface **2180** is a conducting element, pin or solder ball. In an embodiment of the present invention, connector interface **2180** is a DIMM connector.

Connector interface **2180** is coupled to buffer device **2130** by channel **2170**. Similarly, memory devices **2133***a–c* and **2133***g–i* are coupled to buffer device **2130** by channels **2140** and **2150**, respectively, in an embodiment of the present invention. Memory devices **2133***a–c* and **2133***g–i* are coupled to buffer device **2130** by a single channel or more than two channels in alternate embodiments of the present invention. Memory devices **2133***d–f* are coupled to buffer device **2130** by channel **2160** in an embodiment of the present invention. Memory devices **2133***d–f* are coupled to buffer device **2130** in a SIP approach, as described above, in an alternate embodiment of the present invention. For example, memory devices **2133***d–f* are coupled to buffer device by at least one conducting interconnect. Memory devices **2133***j–r* are coupled to buffer device **2130** by channels **2140** and **2150**. In an alternate embodiment of the present invention, memory devices **2133***j–r* are coupled to buffer device **2130** by a single channel or separate channels from channels **2140** and **2150**.

While this invention has been described in conjunction with what is presently considered the most practical embodiments, the invention is not limited to the disclosed embodiments. In the contrary, the embodiments disclosed cover various modifications that are within the scope of the invention as set forth in the following claims.

What is claimed is:

**1**. A memory module comprising:

a connector interface which includes a first contact, a second contact and a third contact;

a first integrated circuit having memory including a first storage cell and a second storage cell; and

a buffer device coupled to the first integrated circuit and the connector interface, wherein the buffer device is operable in a first mode and a second mode, wherein:

during the first mode of operation, the first storage cell and the second storage cell are accessible from the first contact and the second contact, respectively; and

during the second mode of operation, at a first time the first storage cell is accessible from the first contact and the second contact is coupled to the third contact.

**2**. The memory module of claim **1**, wherein:

during the second mode of operation, at a second time the second storage cell is accessible from the first contact and the second contact is coupled to the third contact.

3. The memory module of claim 1, wherein a delay is provided when accessing the first storage cell in the second mode of operation.

4. The memory module of claim 1, wherein during the first mode of operation,

a first coupling circuit couples a first external signal line coupled to the first contact to a first internal signal line coupled to the first storage cell; and,

a second coupling circuit couples a second external signal line coupled to the second contact to a second internal line coupled to the second storage cell.

5. The memory module of claim 1, wherein during the second mode of operation at the first time,

a first coupling circuit couples a first external signal line coupled to the first contact to an internal signal line coupled to the first storage cell; and,

a second coupling circuit couples a second external signal line coupled to the second contact to a third external line coupled to the third contact.

6. The memory module of claim 2, wherein during the second mode of operation at the second time,

a first coupling circuit couples a first external signal line coupled to the first contact to an internal signal line coupled to the second storage cell; and,

a second coupling circuit couples a second external signal line coupled to the second contact to a third external line coupled to the third contact.

7. The memory module of claim 1, wherein the buffer device further comprises a multiplexer/demultiplexer circuit coupled to the first and second contacts to access the first and second storage cells.

8. The memory module of claim 1, wherein the buffer device further comprises a bypass circuit capable to transfer information between the first and third contacts.

9. The memory module of claim 1, further comprising a fourth contact and wherein the buffer device includes:

a first bypass circuit capable to transfer information between the first and fourth contacts: and,

a second bypass circuit capable to transfer information between the second and third contacts.

10. The memory module of claim 9, further comprising a fifth, a sixth, a seventh and a eighth contact and wherein the buffer device includes:

a third bypass circuit capable to transfer information between the fifth and seventh contacts: and,

a fourth bypass circuit capable to transfer information between the sixth and eighth contacts.

11. The memory module of claim 1, wherein the first, second and third contacts are pins for mating to a socket.

12. The memory module of claim 1, wherein in a master device generates a control signal to the memory module to determine the mode of operation.

13. A memory module comprising:

a connector interface which includes a first contact, a second contact and a third contact;

a first integrated circuit having memory including a first storage cell;

a second integrated circuit having memory including a second storage cell; and

a buffer device coupled to the first integrated circuit, the second integrated circuit and the connector interface, wherein the buffer device is operable in a first mode and a second mode, wherein:

during the first mode of operation, the first storage cell and the second storage cell are accessible from the first contact and the second contact, respectively; and

during the second mode of operation, at a first time the first storage cell is accessible from the first contact and the second contact is coupled to the third contact.

14. The memory module of claim 13, wherein:

during the second mode of operation, at a second time the second storage cell is accessible from the first contact and the second contact is coupled to the third contact.

15. The memory module of claim 13, wherein a delay is provided when accessing the first storage cell in the second mode of operation.

16. The memory module of claim 13, wherein during the first mode of operation,

a first coupling circuit couples a first external signal line coupled to the first contact to a first internal signal line coupled to the first storage cell; and,

a second coupling circuit couples a second external signal line coupled to the second contact to a second internal line coupled to the second storage cell.

17. The memory module of claim 13, wherein during the second mode of operation at the first time,

a first coupling circuit couples a first external signal line coupled to the first contact to an internal signal line coupled to the first storage cell; and,

a second coupling circuit couples a second external signal line coupled to the second contact to a third external line coupled to the third contact.

18. The memory module of claim 14, wherein during the third mode of operation,

a first coupling circuit couples a first external signal line coupled to the first contact to an internal signal line coupled to the second storage cell; and,

a second coupling circuit couples a second external signal line coupled to the second contact to a third external line coupled to the third contact.

19. The memory module of claim 13, wherein the buffer device further comprises a multiplexer/demultiplexer circuit coupled to the first and second contacts to access the first and second storage cells.

20. The memory module of claim 13, wherein the buffer device further comprises a bypass circuit capable to transfer information between the first and third contacts.

21. The memory module of claim 13, further comprising a fourth contact and wherein the buffer device includes:

a first bypass circuit capable to transfer information between the first and third contacts: and,

a second bypass circuit capable to transfer information between the second and fourth contacts.

22. The memory module of claim 21, further comprising a fifth, a sixth, a seventh and a eighth contact and wherein the buffer device includes:

a third bypass circuit capable to transfer information between the fifth and seventh contacts: and,

a fourth bypass circuit capable to transfer information between the sixth and eighth contacts.

23. The memory module of claim 13, wherein the first, second and third contacts are pins for mating to a socket.

24. The memory module of claim 13, wherein in a master device generates a control signal to the memory module to determine the mode of operation.

25. A memory module comprising:

a first integrated circuit having memory including a first storage cell, a second storage cell and a third storage cell;

a plurality of internal signal lines including a first and a second internal signal line coupled to the first integrated circuit;

a plurality of external signal lines including a first external signal line, a second external signal line, and a third external signal line; and,

a buffer device coupled to the plurality of internal signal lines and the plurality of external signal lines, wherein:

at a first time the first storage cell is accessible from the first external signal line coupled to the first internal signal line and the second storage cell is accessible from the second external signal line coupled to the second internal signal line; and

at a second time the third storage cell is accessible from the first external signal line coupled to the first internal signal line and the second external signal line is coupled to the third external signal line.

**26**. The memory module of claim **25**, wherein:

at a third time, the third storage cell is accessible from the first external signal line coupled to the second internal signal line and the second external signal line is coupled to the third external signal line.

**27**. The memory module of claim **25**, wherein a delay is provided when accessing the third storage cell in the second mode of operation.

**28**. The memory module of claim **25**, wherein the buffer device further comprises a multiplexer/demultiplexer circuit coupled to the first and second external signal lines to access the first, second, and third storage cells.

**29**. The memory module of claim **25**, wherein the buffer device further comprises a bypass circuit capable to transfer information between the first and third external signal lines.

**30**. The memory module of claim **25**, wherein the first, second and third external signal lines are coupled to a socket for positioning the memory module.

**31**. The memory module of claim **25**, wherein in a master device generates a control signal to the memory module to determine the mode of operation.

**32**. A memory module comprising:

a first integrated circuit having memory including a first storage cell and a second storage cell;

a second integrated circuit having memory including a third storage cell and a fourth storage cell;

a plurality of internal signal lines including a first and a second internal signal line coupled to the first and second integrated circuits;

a plurality of external signal lines including a first external signal line, a second external signal line, and a third external signal line; and,

a buffer device coupled to the plurality of internal signal lines and the plurality of external signal lines, wherein:

at a first time, the first storage cell is accessible from the first external signal line coupled to the first internal signal line and the second storage cell is accessible from the second external signal line coupled to the second internal signal line; and

at a second time, the second storage cell is accessible from the first external signal line coupled to the first internal signal line and the second external signal line is coupled to the third external signal line.

**33**. The memory module of claim **32**, wherein:

at a third time, the fourth storage cell is accessible from the first external signal line coupled to the second internal signal line and the second external signal line is coupled to the third external signal line.

**34**. The memory module of claim **32**, wherein a delay is provided when accessing the second storage cell in the second mode of operation.

**35**. The memory module of claim **32**, wherein the buffer device further comprises a multiplexer/demultiplexer circuit coupled to the first and second external signal lines to access the first, second, third and fourth storage cells.

**36**. The memory module of claim **32**, wherein the buffer device further comprises a bypass circuit capable to transfer information between the first and third external signal lines.

**37**. The memory module of claim **32**, wherein the first, second and third external signal lines are coupled to a socket for positioning the memory module.

**38**. The memory module of claim **32**, wherein in a master device generates a control signal to the memory module to determine the mode of operation.

**39**. A buffer device, comprising:

a configurable width interface;

a multiplexer/demultiplexer circuit capable to access a first storage cell in a plurality of storage cells; and,

a first bypass circuit capable to transfer information through the buffer device from a first contact to a second contact.

**40**. The buffer device of claim **39**, further comprising:

second bypass circuit capable to transfer information through the buffer device from a third contact to a fourth contact.

**41**. The buffer device of claim **40**, further comprising:

a third bypass circuit capable to transfer information through the buffer device from a fifth contact to a sixth contact; and,

a fourth bypass circuit capable to transfer information through the buffer device from a seventh contact to a eighth contact.

**42**. A memory module, comprising:

a substrate having a first and second surface;

a first integrated circuit memory device disposed on the first surface;

a buffer device having a configurable width interface; and,

a second integrated circuit memory device,

wherein the buffer device and second integrated circuit memory device are included in a first package, the first package disposed on the first surface.

**43**. The memory module of claim **42**, wherein the first package includes a connector coupled to the first surface.

**44**. The memory module of claim **42**, wherein the buffer device is disposed on a first die and the second integrated circuit memory device is disposed on a second die, wherein the first and second dies are included in the first package.

**45**. A memory module, comprising:

a substrate having a first and second surface;

a first integrated circuit memory device disposed on the first surface;

a buffer device having a configurable width interface; and,

a second integrated circuit memory device,

wherein the second integrated circuit memory device is included in a first package and the buffer device is included in a second package, and wherein the second package is disposed on the first surface and the second package is disposed between the first package and the first surface.

**46**. The memory module of claim **42**, wherein the memory module is a dual inline memory module.

**47**. The memory module of claim **42**, wherein the first and second integrated circuits are dynamic random access memory ("DRAM") devices.

**48**. The memory module of claim **42**, wherein the memory module includes 18 integrated circuit memory devices, wherein 9 integrated circuit memory devices are positioned on the second surface, 6 integrated circuit memory devices are positioned on the first surface, and 3 integrated circuit memory devices are positioned on the buffer device.

**49**. The memory module of claim **42**, wherein the memory module includes 18 integrated circuit memory devices, wherein 10 integrated circuit memory devices are positioned on the second surface, 6 integrated circuit memory devices are positioned on the first surface, and 2 integrated circuit memory devices positioned with the buffer device, wherein the 2 integrated circuit memory devices and the buffer device are included in a package positioned on the first surface.

**50**. The memory module of claim **42**, wherein the buffer device includes a bypass circuit.

**51**. The memory module of claim **42**, wherein the memory module is coupled to a master device.

**52**. A memory module, comprising:

a substrate;

a connector interface, coupled to the substrate, which includes a first contact, a second contact and a third contact;

a first integrated circuit having memory including a first storage cell and a second storage cell; and

a buffer device with the first integrated circuit positioned in a package coupled to the substrate, wherein the buffer device is operable in a first mode and a second mode, wherein:

during the first mode of operation, the first storage cell and the second storage cell are accessible from the first contact and the second contact, respectively; and

during the second mode of operation, at a first time the first storage cell is accessible from the first contact and the second contact is coupled to the third contact.

**53**. The memory module of claim **52**, wherein:

during the second mode of operation, at a second time the second storage cell is accessible from the first contact and the second contact is coupled to the third contact.

**54**. The memory module of claim **52**, wherein a delay is provided when accessing the first storage cell in the second mode of operation.

**55**. The memory module of claim **52**, wherein during the first mode of operation,

a first coupling circuit couples a first external signal line coupled to the first contact to a first internal signal line coupled to the first storage cell; and,

a second coupling circuit couples a second external signal line coupled to the second contact to a second internal line coupled to the second storage cell.

**56**. The memory module of claim **52**, wherein during the second mode of operation at the first time,

a first coupling circuit couples a first external signal line coupled to the first contact to an internal signal line coupled to the first storage cell; and,

a second coupling circuit couples a second external signal line coupled to the second contact to a third external line coupled to the third contact.

**57**. The memory module of claim **52**, wherein during the second mode of operation at the second time,

a first coupling circuit couples a first external signal line coupled to the first contact to an internal signal line coupled to the second storage cell; and,

a second coupling circuit couples a second external signal line coupled to the second contact to a third external line coupled to the third contact.

* * * * *