Engineering white paper, 2nd Edition

Configuring and using DDR3 memory with HP ProLiant Gen8 Servers

Best Practice Guidelines for ProLiant servers with Intel® Xeon® processors

Table of contents

Introduction 3

Overview of DDR3 memory technology 3
- **Basics of DDR3 memory technology** 3
- **Basics of DIMMs** 4
- **DDR3 DIMM types** 5
- **HP SmartMemory** 6
- **HP Advanced Memory Error Detection** 6

ProLiant Gen8 memory architecture for servers with Intel® Xeon® E5-2600 series processors 6
- **Overview** 6
- **ProLiant Gen8 servers using the Intel® Xeon® E5-2600 series processors** 7
- **ProLiant Gen8 Intel® Xeon® E5-2600 series processors** 7

ProLiant Gen8 memory architecture for servers using Intel® Xeon® E5-2400 series processors 8
- **Overview** 8
- **ProLiant Gen8 servers using Intel® Xeon® E5-2400 series processors** 9
- **ProLiant Gen8 Intel® Xeon® E5-2400 series processors** 9
- **DDR3 DIMMs for ProLiant Gen8 servers** 10

Populating memory in ProLiant Gen8 servers 11
- **ProLiant Gen8 memory slot configurations** 11
- **Population rules for ProLiant Gen8 servers** 11
- **DIMM Population Order** 12
- **Memory system operating speeds** 14

Netlist EX2004-p. 1
Samsung v Netlist
IPR2023-00455

General population guidelines 14

Optimizing memory configurations 15
Optimizing for capacity 15
Optimizing for performance 15
Optimizing for lowest power consumption 20
Optimizing for Resiliency 22

Understanding unbalanced memory configurations 23
Memory configurations that are unbalanced across channels 23
Memory configurations that are unbalanced across Processors 23

BIOS Settings for memory 24
Controlling Memory Speed 24
Setting Memory Interleave 25

For more information 26

Appendix A - Sample Configurations for 2P ProLiant Gen8 servers 27
24 DIMM slot servers using Intel® Xeon® E5-2600 processor series 27
16 DIMM Slot Servers using Intel® Xeon® E5-2600 series processors 28
12 DIMM Slot Servers using Intel® Xeon® E5-2400 series processors 29

Introduction

This paper provides an overview of the new DDR3 memory and its use in the 2 socket HP ProLiant Gen8 servers using the latest Intel® Xeon® E5-2600 series processor family. With the introduction of HP ProLiant Gen8 servers, DDR3 maximum operating speed is increasing and a new type of Load Reduced DIMM (LRDIMM) is being introduced. We are also introducing HP SmartMemory, which provides superior performance over 3rd party memory in certain configurations.

The new 2 socket HP ProLiant Gen8 servers also feature advances in memory support. HP ProLiant Gen8 servers based on the Intel® Xeon® E5-2600 series processor family support 4 separate memory channels per CPU and up to 24 DIMM slots– allowing larger memory configurations and improved memory performance. They also incorporate HP Advanced Memory Protection technology, which improves the prediction of critical memory error conditions.

In addition to describing these improvements, this paper reviews the rules, best practices, and optimization strategies that should be used when installing DDR3 memory on HP ProLiant Gen8 servers.

Overview of DDR3 memory technology

Basics of DDR3 memory technology

DDR3, the third-generation of DDR SDRAM technology, makes improvements in bandwidth and power consumption over DDR2. Additional improvements in DDR3 yield up to 70% power savings versus DDR2 at the same speed, and 100% higher bandwidth over DDR2.

DDR3 Memory Technology

DDR3 DIMMs use the same 240-pin connector as DDR2 DIMMs, but the notch key is in a different position.

To increase performance and reduce power consumption, DDR3 incorporates several key enhancements:

- Standard DDR3 DIMMs operate at 1.5V, compared to 1.8V for DDR-2 DIMMs. DDR3 Low Voltage DIMMs operate at 1.35V. For HP ProLiant Gen8 servers, the majority of new DDR3 DIMMs are Low Voltage. These HP SmartMemory DIMMs enable the same performance as standard 1.5V DIMMs while using up to 20% less power.
- An 8-bit prefetch buffer stores more data before it is needed than the 4-bit buffer for DDR2
- Fly-by topology (for the commands, addresses, control signals, and clocks) improves signal integrity by reducing the number of stubs and their length. The improved signal integrity, combined with “write leveling” technology, enables DDR3 to operate at significant faster transfer rates than previous memory generations.
- A thermal sensor integrated on the DIMM module signals the chipset to reduce memory traffic to the DIMM if its temperature exceeds a programmable critical trip point.

DDR3 Speeds

The DDR3 specification originally defined data rates of up to 1600 Mega transfers per second (MT/s), more than twice the rate of the fastest DDR2 memory speed (Table 2). ProLiant G6 and G7 servers support a maximum DDR3 DIMM speed of 1333 MT/s. ProLiant Gen8 servers use the new 1600 MT/s DDR3 DIMMs as well as 1333 MT/s DIMMs.

The DDR3 specification has been extended to define additional memory speeds of 1866 MT/s and 2166 MT/s. ProLiant Gen8 servers currently support memory speeds up to 1600 MT/s. HP engineers have designed the ProLiant Gen8 platform architecture to run at memory speeds up to 1866 MT/s once processor chipsets and DIMMs that support this speed are available.

Table 1. DDR3 memory speeds

DIMM Label	JEDEC Name	Data Transfer Rate	Maximum DIMM Throughput
PC3 – 14900	DDR3-1866	1866 MT/s	14.9 GB/s
PC3 – 12800	DDR3-1600	1600 MT/s	12.8GB/s
PC3 – 10600	DDR3-1333	1333 MT/s	10.6 GB/s
PC3 – 8500	DDR3-1066	1066 MT/s	8.5 GB/s
PC3 – 6400	DDR3- 800	800 MT/s	6.4 GB/s

Basics of DIMMs

Before exploring the new technologies in DDR3 DIMMs for ProLiant Gen8 servers, let's quickly review some of the basics of DIMM technology.

DRAM technology

DIMMs are made up of DRAM chips that are grouped together. Each DRAM chip contains arrays of individual bit storage locations. A DRAM chip with one billion storage locations is called 1 Gigabit (1Gb) technology. Note the lower case b in Gb. Eight 1Gb chips ganged together will provide 1 GigaByte (1GB) of memory. Note the upper case B in GB.

DDR3 DIMMs are currently made up of 1Gb, 2Gb, and 4Gb DRAM chips. It is not possible to mix DRAM technologies on the same DIMM. DDR3 does not support DIMMs made up of 512Mb DRAM chips.

A DRAM chip may have 4 data I/O signals or 8 data I/O signals. These are called x4 or x8, pronounced "by four" or "by eight" respectively.

Ranks

A rank is a group of DRAM chips that are grouped together to provide 64 bits (8 Bytes) of data on the memory bus. All chips in a rank are controlled simultaneously by the same Chip Select, Address and Command signals. DDR3 DIMMs are available in single-, dual- and quad-ranks (1, 2, and 4 ranks respectively.)

Eight x8 DRAM chips or 16 x4 chips form a rank. DIMMs with 8 bits of Error Correction Code (ECC) use nine x8 chips and 18 x4 chips for each rank.

Speed

Speed refers to the frequency of the memory clock. The memory subsystem uses a different clock than the processor cores, and the memory controllers use this clock to coordinate data transfers between the memory controller and the DIMMs. The actual speed at which this clock operates in a particular server depends on five factors:

- **Rated memory speed of the processor**. Each Intel® Xeon® processor model supports a specific maximum memory speed.
- **Rated memory speed of the DIMM**. DDR3 DIMMs can run at different speeds, often called frequencies. For ProLiant Gen8 servers, we offer two native speeds of DDR3 memory: DDR3-1600 and DDR3-1333.
- **Number of ranks on the DIMM**. Each rank on a memory channel adds one electrical load. As the electrical loads increase, the signal integrity degrades. To maintain the signal integrity the memory channel may run at a lower speed.
- **Number of DIMMs populated**. The number of DIMMs attached to a memory controller also affects the loading and signal integrity of the controller's circuits. In order to maintain signal integrity, the memory controller may operate DIMMs at lower than their rated speed. In general, the more DIMMs that are populated, the lower the operational speed for the DIMMs.
- **BIOS settings**. Enabling certain BIOS features can affect memory speed. For example, the ROM Based Setup Utility (RBSU) in HP ProLiant servers includes a user-selectable setting to force memory to run at a slower speed than the normally configured speed in order to save on power consumption. See the section on BIOS settings for details.

DDR3 DIMM types

ProLiant Gen8 servers support four different DIMM types – Unbuffered with ECC Memory (UDIMMs), Registered Memory (RDIMMs), Load Reduced Memory (LRDIMMs), and HyperCloud Memory (HDIMMs). UDIMMs and RDIMMs are familiar from their use in both ProLiant G6 and G7 servers. However, LRDIMMs are a new class of DIMMs that work solely with the ProLiant Gen8 server architecture. HyperCloud DIMMs are special purpose memory available only as a Factory Installed option. Each type of memory has its unique characteristics, and the type of memory you use may depend on the application requirements for your server.

Unbuffered DIMMs

UDIMMs represent the most basic type of memory module. With UDIMMs, all address and control signals, as well as the data lines, connect directly to the memory controller across the DIMM connector. UDIMMs offer the fastest memory speeds, lowest latencies, and (relatively) low power consumption. However, they are limited in capacity. Unbuffered DIMMs with ECC are identified with an E suffix in the manufacturer's module name (example PC3L-10600E). UDIMMs are applicable for systems needing the lowest memory latency at the lowest power at relatively low memory capacities.

Registered DIMMs

Registered DIMMs (RDIMMs) lessen direct electrical loading by having a register on the DIMM to buffer the Address and Command signals between the DRAMs and the memory controller. This allows each memory channel to support up to three dual-rank DIMMs in ProLiant Gen8 servers, increasing the amount of memory that a server can support. With RDIMMs, the partial buffering slightly increases both power consumption and memory latency.

Load Reduced DIMMs

Load Reduced DIMMs are available for the first time with the ProLiant Gen8 servers. LRDIMMs use a memory buffer all memory signals and to perform rank multiplication. The use of rank multiplication allows ProLiant Gen8 servers to support three quad-ranked DIMMs on a memory channel for the first time. You can use LRDIMMs to configure systems with the largest possible memory footprint. However, LRDIMMs use the most power and have the highest latencies for the same memory clock speeds.

HyperCloud DIMMs

HyperCloud DIMMs (HDIMMs) are a new DIMM type designed to support 3 DIMMs per channel running at 1333 MT/s. Because they use a different buffer architecture, HDIMMs will only operate at 3 DIMMs per channel and with all memory channels populated. For HP ProLiant Gen8 servers, HDIMMs are only available as a Factory Installed Option and solely for the Proliant 380p and the ProLaint 360p servers.

Comparing DIMM Types

Table 2 provides a quick comparison UDIMMs, RDIMMs, LRDIMMs and HDIMMs for ProLiant Gen8 servers using the 2P Intel architecture.

Table 2. Comparison of UDIMMs, RDIMMS, LRDIMMs and HDIMMs for ProLiant Gen8 servers

Feature	UDIMM	RDIMM	LRDIMM	HDIMM
DIMM Sizes Available	2 GB, 4 GB, 8 GB	4 GB, 8 GB, 16 GB	32 GB	16 GB
Low power version of DIMMs available	Yes	Yes	Yes	Yes
Advanced ECC support	Yes	Yes	Yes	Yes
Address parity	No	Yes	Yes	Yes
Rank Sparing	Yes	Yes	Yes	Yes
Lock-Step Mode	Yes	Yes	Yes	Yes
Relative Cost	Lower	Higher	Highest	Higher
Maximum capacity on a server with 16 DIMM slots	128 GB	256 GB	512 GB	N/A
Maximum capacity on a server with 24 DIMM slots	128 GB	384 GB	768 GB	384 GB only

HP SmartMemory

ProLiant Gen8 servers introduce HP SmartMemory technology for DDR3 memory. HP SmartMemory enables authentication of installed memory. This verifies whether DIMMs have passed our qualification and testing processes and determines if the memory has been optimized to run on HP ProLiant Gen8 servers. Use of HP SmartMemory DIMMs enables extended performance and manageability features for the 2P ProLiant Gen8 servers. HP SmartMemory supports extended performance compared to third party memory for several DIMM types and configurations. Table 3 summarizes these performance extensions.

Table 3. Extended performance for HP SmartMemory DDR3 DIMMs in 2P ProLiant Gen8 servers

DIMM Type	1 or 2 DIMMs per channel	3 DIMMs per channel
1600 MT/s RDIMMs	1600 @ 1.5V (SmartMemory) 1600 @ 1.5V (3rd Party)	1333 @ 1.5V (SmartMemory) 1066 @ 1.5V (3rd Party)
1333 MT/s RDIMMs	1333 @ 1.35V (SmartMemory) 1333 @ 1.5V (3rd Party)	1066 @ 1.35V (SmartMemory) 1066 @ 1.5V (3rd Party)
1333 MT/s LRDIMMs	1333 @ 1.35V (SmartMemory) 1333 @ 1.5V (3rd Party)	1066 @ 1.35V (SmartMemory) 1066 @ 1.5V (3rd Party)
1333 MT/s UDIMMs	1333 MT/s (SmartMemory) 1066 MT/s (3rd Party)	Not Supported

HP Advanced Memory Error Detection

Over the past five years, the average size of server memory configurations has increased by more than 500%. With these increased memory capacities, increases in memory errors are unavoidable. Fortunately, most memory errors are both transient and correctable. Current memory subsystems can correct up to a 4 bit memory error in the 64 bits of data that are transferred in each memory cycle.

HP Advanced Memory Error Detection technology introduces refinements to error detection technology. Instead of simply counting each correctable memory error, this new technology analyzes all correctable errors to determine which ones have a higher probability of leading to uncorrectable errors in the future. Using this advanced approach, HP Advanced Memory Error Detection is able to better monitor the memory subsystem and increase the effectiveness of the Pre-Failure Alert notification.

All ProLiant Gen8 servers feature HP Advanced Memory Error Detection. For more information on this technology, see the HP Advanced Memory Error Detection Technology technology brief at http://h20000.www2.hp.com/bc/docs/support/SupportManual/c02878598/c02878598.pdf

ProLiant Gen8 memory architecture for servers with Intel® Xeon® E5-2600 series processors

Overview

The DDR3 memory architecture for ProLiant Gen8 servers with E5-2600 series processors features several advancements over ProLiant G6 and G7 servers, including the following:

- An increase to 4 memory channels per processor
- A maximum memory speed of 1600 MT/s with the capability to support up to 1866 MT/s on future processor models.
- Support for HP SmartMemory with extended performance features over 3rd Party memory.
- Support for LRDIMM technology, which allows three quad-ranked DIMMs per channel.

Figure 1shows a block diagram of this new memory architecture.

Figure 1. ProLiant Gen8 memory architecture for servers using the E5-2600 family processor series

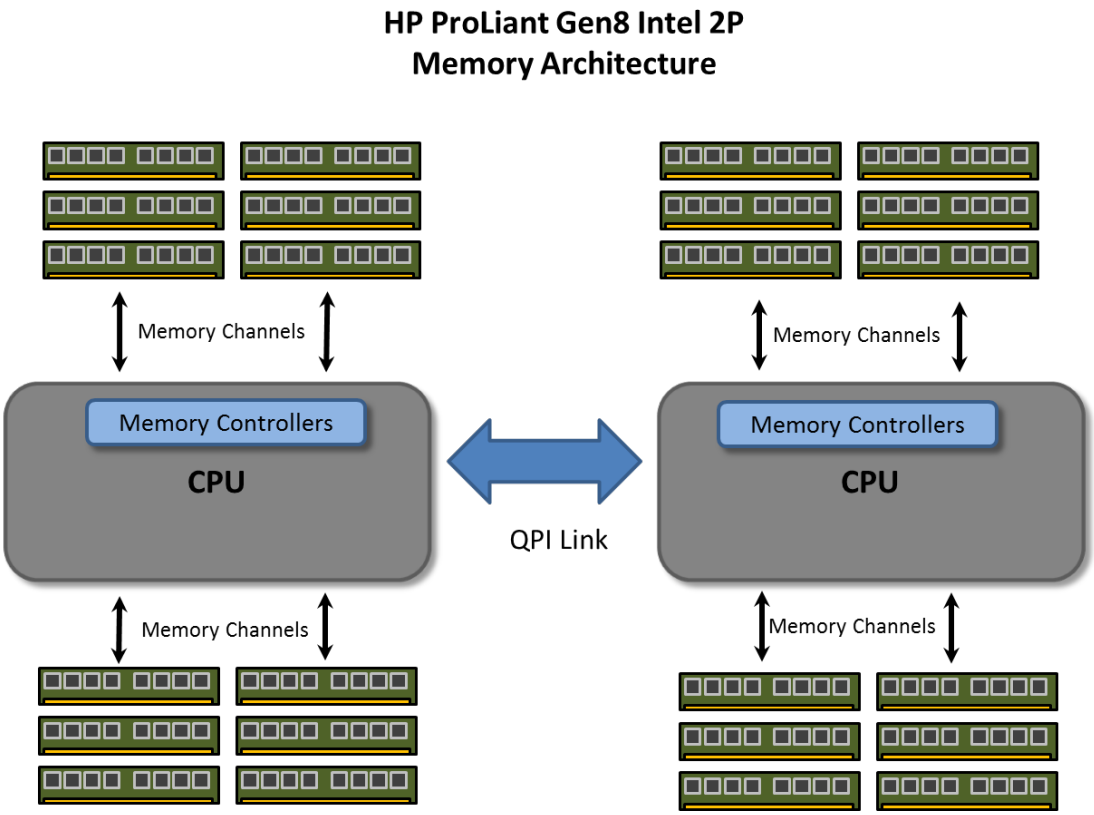

ProLiant Gen8 servers using the Intel® Xeon® E5-2600 series processors

As shown in Table 4, there are several models of 2P ProLiant Gen8 servers that use the Intel Xeon E5-2600 family of processors.

Table 4. 2P ProLiant Gen8 servers using E5-2600 series processors

HP ProLiant server model	Number of DIMM slots	Maximum Memory
DL380p Gen8	24	768 GB
DL360p Gen8	24	768 GB
BL460c Gen8	16	512 GB
ML350p Gen8	24	768 GB
SL230s Gen8	16	512 GB
SL250s Gen8	16	512 GB
SL270s Gen8	16	512 GB

ProLiant Gen8 Intel® Xeon® E5-2600 series processors

There are a number of processor models of the Intel Xeon E5-2600 series processor family. Processor models differ in their number of cores, maximum processor frequency, amount of cache memory, and features supported (such as Intel Hyper-Threading Technology). In addition, different processor models support different maximum memory speeds. This affects the maximum performance and the power consumption of the memory subsystem and of the server in general.

Table 5. HP ProLiant Gen8 Intel Xeon E5-2600 Series Processor Family

Processor Model Number	CPU Frequency	Level 3 Cache Size	Maximum Memory Speed	Maximum Memory Throughput (per channel)
E5-2690	2.90 GHz	20MB	1600 MT/s	12.8GB/s
E5-2680	2.70 GHz	20MB	1600 MT/s	12.8GB/s
E5-2670	2.60 GHz	20MB	1600 MT/s	12.8GB/s
E5-2667	2.90 GHz	15MB	1600 MT/s	12.8GB/s
E5-2665	2.40 GHz	20MB	1600 MT/s	12.8GB/s
E5-2660	2.20 GHz	20MB	1600 MT/s	12.8GB/s
E5-2650	2.00 GHz	20MB	1600 MT/s	12.8GB/s
E5-2650L	1.80 GHz	20MB	1600 MT/s	12.8GB/s
E5-2643	3.30 GHz	10MB	1600 MT/s	12.8GB/s
E5-2637	3.00 GHz	15MB	1600 MT/s	12.8GB/s
E5-2640	2.50 GHz	15MB	1333 MT/s	10.6 GB/s
E5-2630	2.30 GHz	15MB	1333 MT/s	10.6 GB/s
E5-2630L	2.00 GHz	15MB	1333 MT/s	10.6 GB/s
E5-2620	2.00 GHz	15MB	1333 MT/s	10.6 GB/s
E5-2609	2.40 GHz	10MB	1066 MT/s	8.5 GB/s
E5-2603	1.80 GHz	10MB	1066 MT/s	8.5 GB/s

ProLiant Gen8 memory architecture for servers using Intel® Xeon® E5-2400 series processors

Overview

ProLiant Gen8 servers using the Intel E5-2400 series processors feature a memory architecture that is similar to other ProLiant Gen8 servers. This architecture supports the same DDR3 speeds as other ProLiant Gen8 servers. It also supports HP SmartMemory. However, the memory architecture for these ProLiant Gen8 servers has three memory channels per processor and supports a maximum of two DIMMs in each channel. An overview of this architecture is shown in Figure 2.

Figure 2. ProLiant Gen8 memory architecture for servers using the E5-2400 series processors

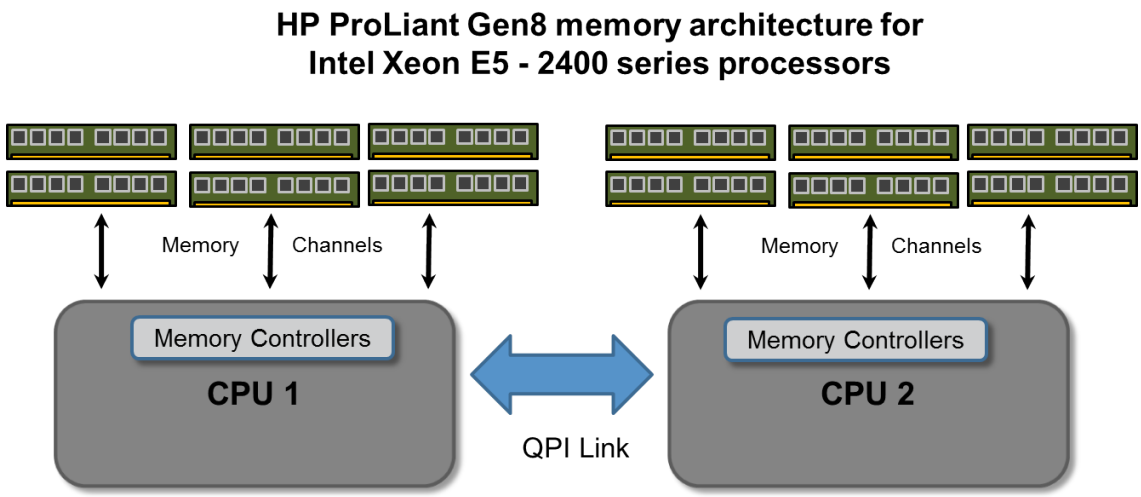

ProLiant Gen8 servers using Intel® Xeon® E5-2400 series processors

There are several different models of the 2P ProLiant Gen8 servers that use the Intel Xeon E5-2400 family of processors. These are shown in Table 6.

Table 6. 2P HP ProLiant Gen8 servers using Intel Xeon E5-2400 series processors

HP ProLiant server model	Number of DIMM slots	Maximum Memory
DL380e Gen8	12	384 GB
DL360e Gen8	12	384 GB
BL420c Gen8	12	384 GB
ML350e Gen8	12	384 GB

ProLiant Gen8 Intel® Xeon® E5-2400 series processors

There are a number of processor models in the Intel Xeon E5-2400 series processor family. As with the E5-2600 series, these processor models differ in their number of cores, maximum processor frequency, amount of cache memory, and features supported (such as Intel Hyper-Threading Technology). They too have different models supporting different maximum memory speeds.

Table 7. ProLiant Gen8 E5-2400 series processors

Processor Model Number	CPU Frequency	Level 3 Cache Size	Maximum Memory Speed	Maximum Memory Throughput (per channel)
E5-2450	2.10 GHz	20MB	1600 MT/s	12.8GB/s
E5-2450L	1.80 GHz	20MB	1600 MT/s	12.8GB/s
E5-2430	2.20 GHz	15MB	1600 MT/s	12.8GB/s
E5-2420	1.90 GHz	15MB	1600 MT/s	12.8GB/s
E5-2407	2.20 GHz	10MB	1600 MT/s	12.8GB/s
E5-2403	1.80 GHz	10MB	1600 MT/s	12.8GB/s

DDR3 DIMMs for ProLiant Gen8 servers

HP ProLiant Gen8 servers using the Intel Xeon processors support the use of DDR3 DIMMs specified at speeds of both 1600 MT/s (PC3-12800) and 1333 MT/s (PC3-10600). Table 8 lists the DDR3 DIMMs that are qualified for Intel-based HP ProLiant Gen8 servers. HP part descriptions use codes from the JEDEC standard for specifying DIMM type and speed. Figure 3 explains how to decode the part number descriptions.

Table 8. HP DDR3 DIMMs for ProLiant Gen8 servers

Registered DIMMs (RDIMM)	HP Part Number
HP 4GB (1x4GB) Single Rank x4 PC3L-10600R (DDR3-1333) Registered CAS-9 Low Voltage Memory Kit	647893-B21
HP 4GB (1x4GB) Single Rank x4 PC3-12800R (DDR3-1600) Registered CAS-11 Memory Kit	647895-B21
HP 8GB (1x8GB) Dual Rank x4 PC3L-10600R (DDR3-1333) Registered CAS-9 Low Voltage Memory Kit	647897-B21
HP 8GB (1x8GB) Single Rank x4 PC3-12800R (DDR3-1600) Registered CAS-11 Memory Kit	647899-B21
HP 16GB (1x16GB) Dual Rank x4 PC3L-10600R (DDR3-1333) Registered CAS-9 Low Voltage Memory Kit	647901-B21
HP 16GB (1x16GB) Dual Rank x4 PC3-12800R (DDR3-1600) Registered CAS-11 Memory Kit	672631-B21
Unbuffered with ECC DIMMs (UDIMM)	
HP 2GB (1x2GB) Single Rank x8 PC3L-10600E (DDR3-1333) Unbuffered CAS-9 Low Voltage Memory Kit	647905-B21
HP 4GB (1x4GB) Dual Rank x8 PC3L-10600E (DDR3-1333) Unbuffered CAS-9 Low Voltage Memory Kit	647907-B21
HP 8GB (1x8GB) Dual Rank x8 PC3L-10600E (DDR3-1333) Unbuffered CAS-9 Low Voltage Memory Kit	647909-B21
Load Reduced DIMMs (LRDIMM)	
HP 32GB (1x32GB) Quad Rank x4 PC3L-10600L (DDR3-1333) Load Reduced CAS-9 Low Voltage Memory Kit	647903-B21
HyperCloud DIMMs (HDIMM)	
HP 16GB (1x16GB) Dual Rank x4 PC3-10600H (DDR3-1333) HyperCloud CAS-9 FIO Memory Kit (Factory Install Only)	678279-B21

Figure 3. HP DDR3 Memory Part Number Decoder

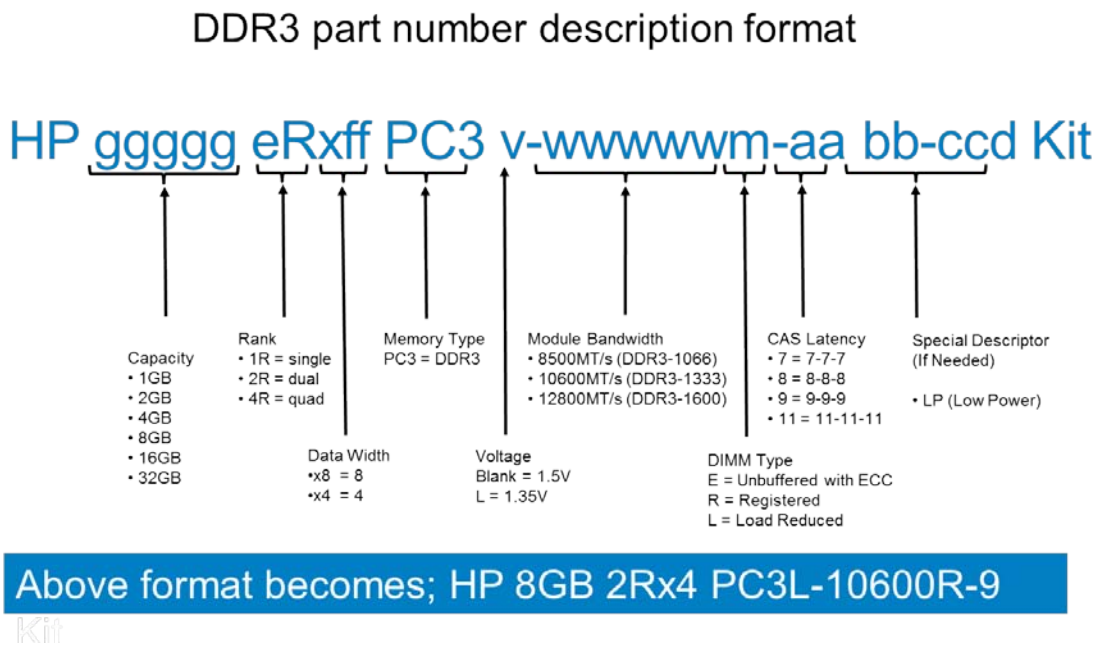

Populating memory in ProLiant Gen8 servers

ProLiant Gen8 memory slot configurations

The ProLiant Gen8 servers feature three different memory slot configurations:

- Either 24 or 16 memory slots total for servers using E5-2600 series processors.
- 12 memory slots total for servers using E5-2400 series processors

For ProLiant Gen8 servers, we recommend populating all memory channels whenever possible. This ensures the best memory performance.

Population rules for ProLiant Gen8 servers

For optimal performance and functionality, it is necessary to adhere to the following population rules. Violations may result in reduced memory capacity, or error messages during boot.

Rules for populating processors and DIMM slots

- Install DIMMs only if the corresponding processor is installed.
- If only one processor is installed in a two-processor system, only half of the DIMM slots are available.
- To maximize performance, we recommend balancing the total memory capacity between all installed processors and load the channels similarly whenever possible.
- When two processors are installed, balance the DIMMs across the two processors.
- White DIMM slots denote the first slot to be populated in a channel.
- Place the DIMMs with the highest number of ranks in the white slot when mixing DIMMs of different ranks on the same channel.

Rules for DIMM types

- Do not mix UDIMMs, RDIMMs, or LRDIMMs.
- Quad rank RDIMMs are not supported in ProLiant Gen8 servers.
- LRDIMMs are capable of up to three DIMMs per channel.
- RDIMMs operating at either 1.35V or 1.5V may be mixed in any order, but the system will operate at the higher voltage.
- DIMMs of different speeds may be mixed in any order. The server will select the lowest common speed.

General rules

- The maximum memory speed is a function of the memory type, memory configuration, processor model, and settings in ROM BIOS.
- The maximum memory capacity is a function of the memory type and number of installed processors.
- To realize the performance memory capabilities listed in this document, HP SmartMemory is required.

DIMM Population Order

Figure 4 shows the memory slot configuration for 24-slot 2P ProLiant DL380p Gen8 server. In this drawing, the first memory slots for each channel on each processor are the white memory slots (A, B, C, and D).

Figure 4. DIMM slots and population order for 24 slot 2P ProLiant Gen8 servers.

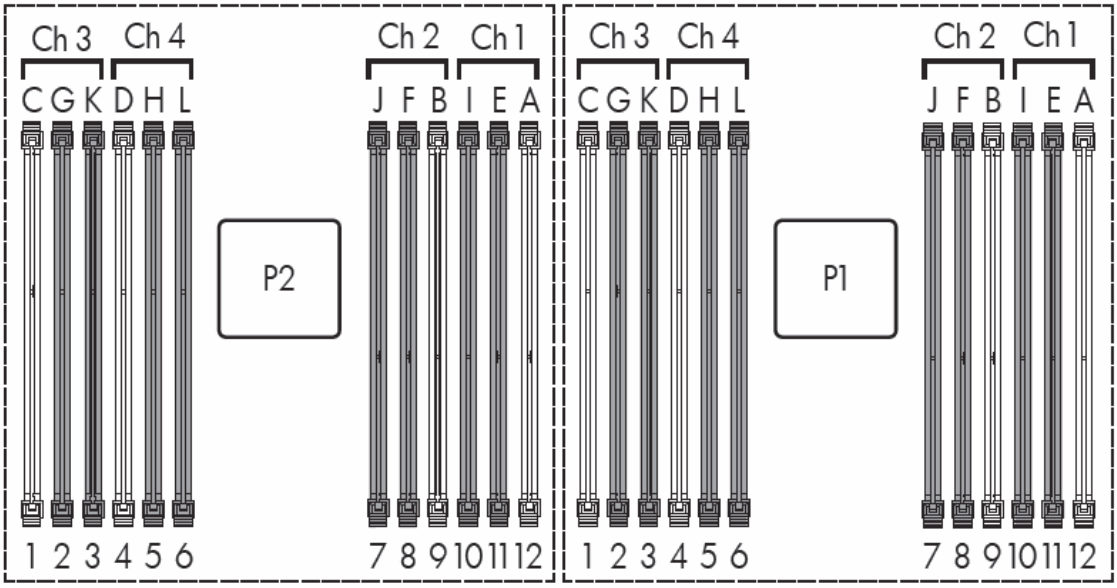

In general, memory population order follows the same logic for all ProLiant servers - although the processors may not be located with a different physical arrangement relative to each other in some servers. To populate the server memory in the correct order, you should use the following rules:

- When a single processor is installed in the system, install DIMMs in sequential alphabetical order – A, B, C, D... and so on.
- When 2 processors are installed in the server, install DIMMs in sequential alphabetical order – P1-A, P2-A, P1-B, P2-B... and so on.
- Within a given channel, you should populate DIMMs from the heaviest electrical load (dual-rank) to the lightest load (single-rank).

For more information, you should consult the User Guide:

hp.com > support & drivers > product support & troubleshooting > enter your product

Figure 5 shows the memory slot configuration for 16 slot 2P ProLiant Gen8 servers. The configuration is similar to the to the 24 slot servers. However, 16 slot servers have only 2 DIMM slots per channel. Once again, the first memory slots for each channel on each processor are the white memory slots (A, B, C, and D). You should populate the memory for 16 slot servers using the same rules as those for 24 slot servers.

Figure 5. DIMM slots and population order for 16 slot 2P ProLiant Gen8 servers.

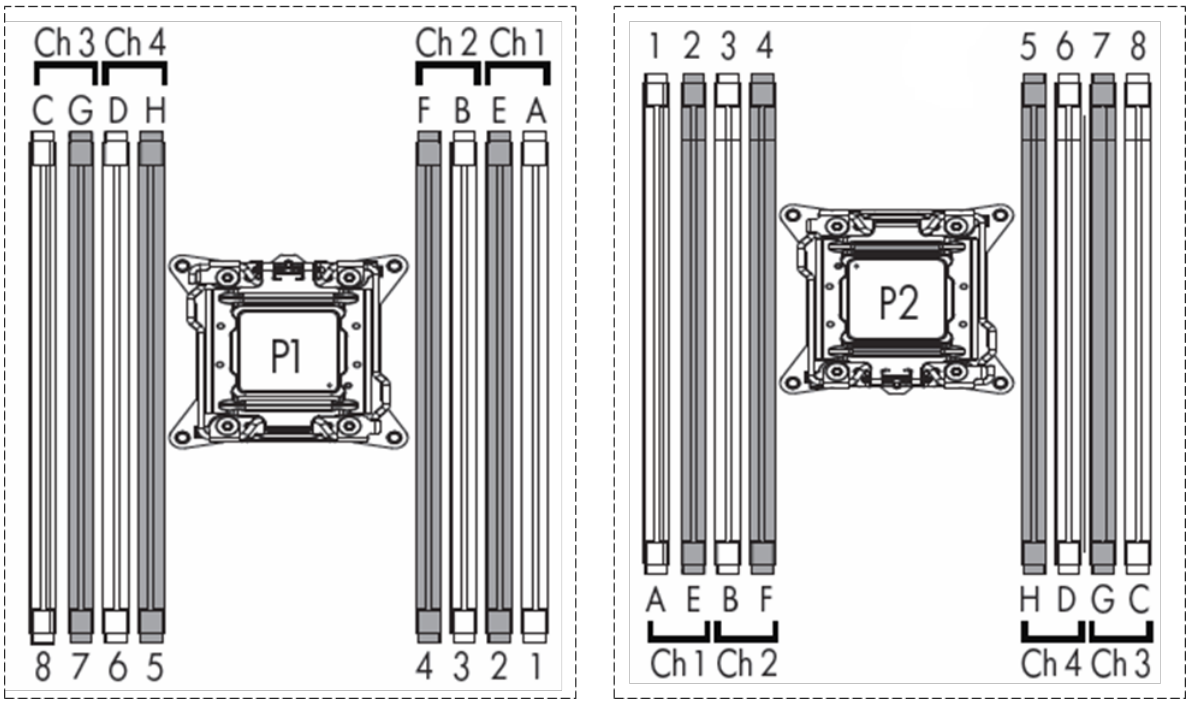

Figure 6 shows the memory slot configuration for the 12 slot 2P ProLiant Gen8 servers that use the E5-2400 series processors. These servers have only three memory channels per processor. The first memory slots for each channel on each processor are the white memory slots (A, B, and C). You should populate the memory for 12 slot servers using the same general rules as those for 24 and 16 slot servers.

Figure 6. DIMM slots and population order for 12 slot 2P ProLiant Gen8 servers.

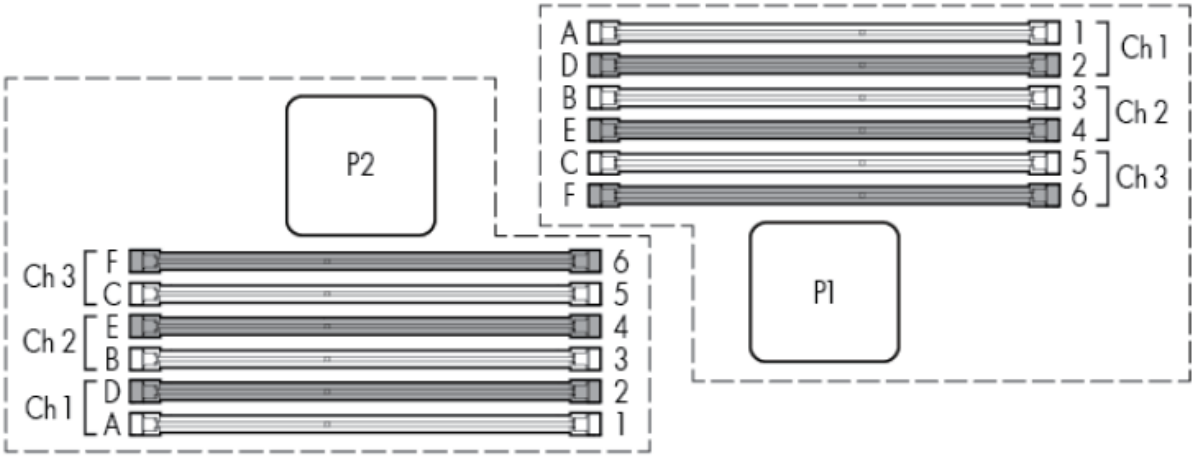

Memory system operating speeds

All DDR3 DIMMs for ProLiant Gen8 servers operate natively at either 1600 MT/s or 1333 MT/s. However, the final operating speed of the memory system for the server depends on the type of DIMMs you install as well as the number of DIMMs you install per channel. Larger configurations using 2 or 3 DIMMs per memory channel may operate at a slower speed than the native speed of the DIMMs. Table 9 shows the memory system operating speed for the servers based on the type and number of DIMMs you install.

Table 9. ProLiant Gen8 server memory operating speeds for different DIMM configurations

	RDIMMs Standard Voltage (1.5V)	**RDIMMs Low Voltage (1.35V)**	**LRDIMMs Low Voltage (1.35V)**	**UDIMMs Low Voltage (1.35V)**
1 DIMM per channel	1600 MT/s	1333 MT/s	1333 MT/s	1333 MT/s
2 DIMMs per channel	1600 MT/s	1333 MT/s	1333 MT/s	1333 MT/s
3 DIMMs per channel	1333 MT/s (with RBSU option)	1066 MT/s	1066 MT/s	Not Supported

Mixing DIMM speeds in a configuration is allowed. However, the following will apply.

- The system processor speed rules always override the DIMM capabilities.
- When mixing DIMMs of different speeds, the memory system will use the clock rate of the slowest DIMM in the server.
- Both processors will operate at the same memory clock rate.

General population guidelines

When configuring a 2P ProLiant Gen8 server, you can achieve a good balance between performance, power usage, and cost by following these general guidelines.

- Populate all channels of each processor (For 2 processor systems, this means populating in groups of 6 or 8 identical DIMMs).

- Use the same HP SmartMemory part number in each memory channel.

Optimizing memory configurations

By taking advantage of the different DIMM types, sizes and speeds available for HP ProLiant Gen8 servers, you can optimize server memory configuration to meet different application or datacenter requirements.

Optimizing for capacity

You can maximize memory capacity on ProLiant Gen8 servers using the new 32 GB LRDIMMs. With LRDIMMs you can install up to three quad-ranked DIMMs in a memory channel, which was not possible with earlier ProLiant G6 or G7 ProLiant servers. On 24 slot servers, you can configure the system with up to 768 GB of total memory.

Table 10 shows the maximum memory capacities for ProLiant Gen8 servers using each of the 3 DIMM types.

Table 10. Maximum memory capacities for 2P ProLiant Gen8 servers using different DIMM types

Number of DIMM Slots	DIMM Type	Maximum Capacity	Configuration
24	UDIMM	128 GB	16 x 8GB 2R
	RDIMM	384 GB	24 x 16GB 2R
	LRDIMM	768 GB	24 x 32GB 4R
16	UDIMM	128 GB	16 x 8GB 2R
	RDIMM	256 GB	16 x 16GB 2R
	LRDIMM	512 GB	16 x 32GB 4R
12	UDIMM	96 GB	12 x 8GB 2R
	RDIMM	192 GB	12 x 16GB 2R
	LRDIMM	384 GB	12 x 32GB 4R

Optimizing for performance

The two primary measurements of memory subsystem performance are throughput and latency. Latency is a measure of the time it takes for the memory subsystem to begin to deliver data to the processor core after the processor makes a request. Throughput measures the total amount of data that the memory subsystem can transfer to the system processor(s) during a given period.

Factors influencing latency

Unloaded and loaded latencies are a measure of the efficiency of the memory sub-section in a server. Memory latency in servers is usually measured from the time of a read request in the core of a processor until the data is supplied to that core. This is also called load-to-use. Unloaded latency measures the latency when the system is idle and represents the lowest latency that the system can achieve for memory requests for a given processor/memory combination. Loaded latency is the latency when the memory subsystem is saturated with memory requests. Loaded latency will always be greater than unloaded latency.

There are a number of factors that influence memory latency in a system.

- **DIMM Speed**. Faster DIMM speeds deliver lower latency, particularly loaded latency. Under loaded conditions, the primary contributor to latency is the time memory requests spend in a queue waiting to be executed. The faster the DIMM speed, the more quickly the memory controller can process the queued commands. For example, Memory running at 1600 MT/s has about 20% lower loaded latency than memory running at 1333 MT/s.
- **Ranks**. For the same memory speed and DIMM type, more ranks will result in lower loaded latency. More ranks give the memory controller a greater capability to parallelize the processing of memory requests. This results in shorter request queues and therefore lower latency.

- **CAS latency**. CAS (Column Address Strobe) latency represents the basic DRAM response time. It is specified as the number of clock cycles (e.g. 6, 7, 11) that the controller must wait after asserting the Column Address signal before data is available on the bus. CAS latency plays a larger role in determining the unloaded latency than loaded latency.

Figure 7 shows both unloaded and loaded latency numbers for various DDR3 DIMMs when used in one DIMM per channel configurations. As this chart illustrates, the idle latency is almost the same for every DIMM type and capacity. This is because the primary component of idle latency is the memory system overhead of performing a basic memory read or write operation, which is the same for all DIMM types regardless of their speed.

Figure 7. Idle and Loaded Latencies for various DDR3 DIMMs on 2P HP ProLiant Gen8 servers

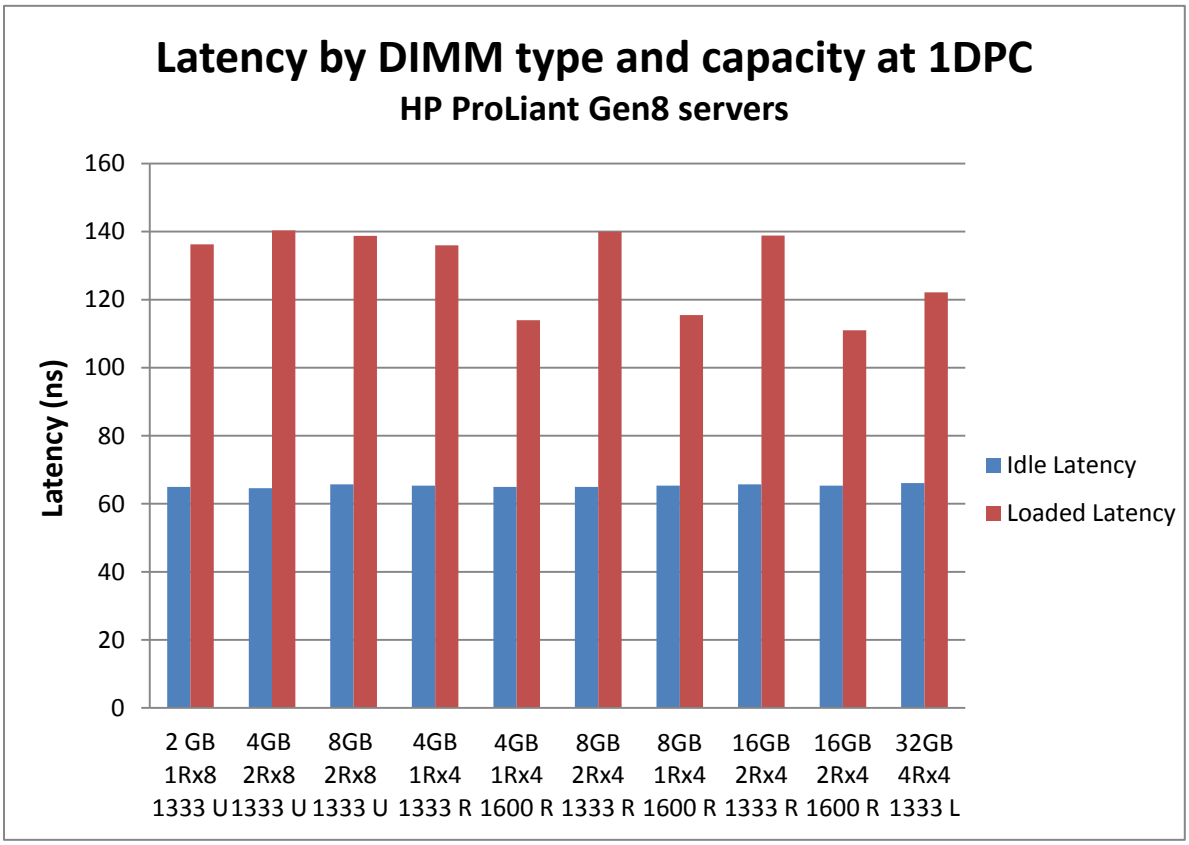

Factors influencing memory throughput

Factors affecting memory throughput include the number of memory channels populated, number of ranks on the channel, channel interleaving, and the speed at which the memory runs.

Number of memory channels and throughput

The largest impact on throughput is the number of memory channels populated. By interleaving memory access across multiple memory channels, the integrated memory controllers are able to increase memory throughput significantly. Optimal throughput and latency are achieved when all channels of each installed CPU are populated identically.

As Figure 8 shows, adding a second DIMM to the system (and thus populating the second memory channel) essentially doubles system read throughput. Gains in throughput for each additional DIMM installed are almost linear until all eight memory channels are populated.

Figure 8. System throughput with 1,2,4,8 channels populated in a 2 processor system.

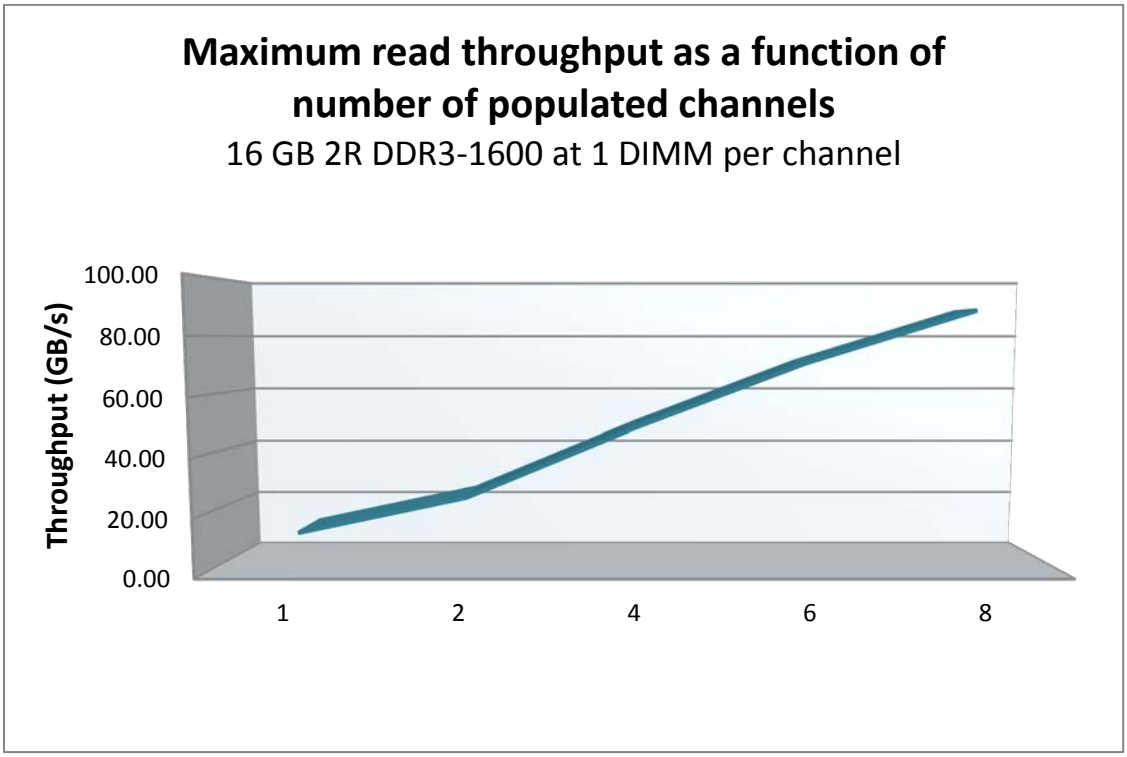

Memory speed and throughput

Higher memory speeds increase throughput. Using a one DIMM per channel configuration, Figure 9 shows that system memory throughput at 1333 MT/s is 20% higher than at 1066 MT/s. Throughput at 1600 MT/s memory speed is 17% higher than at 1333 MT/s.

Figure 9. Throughput at different DIMM speeds with 1 DIMM per channel using 16GB 1600 RDIMMs.

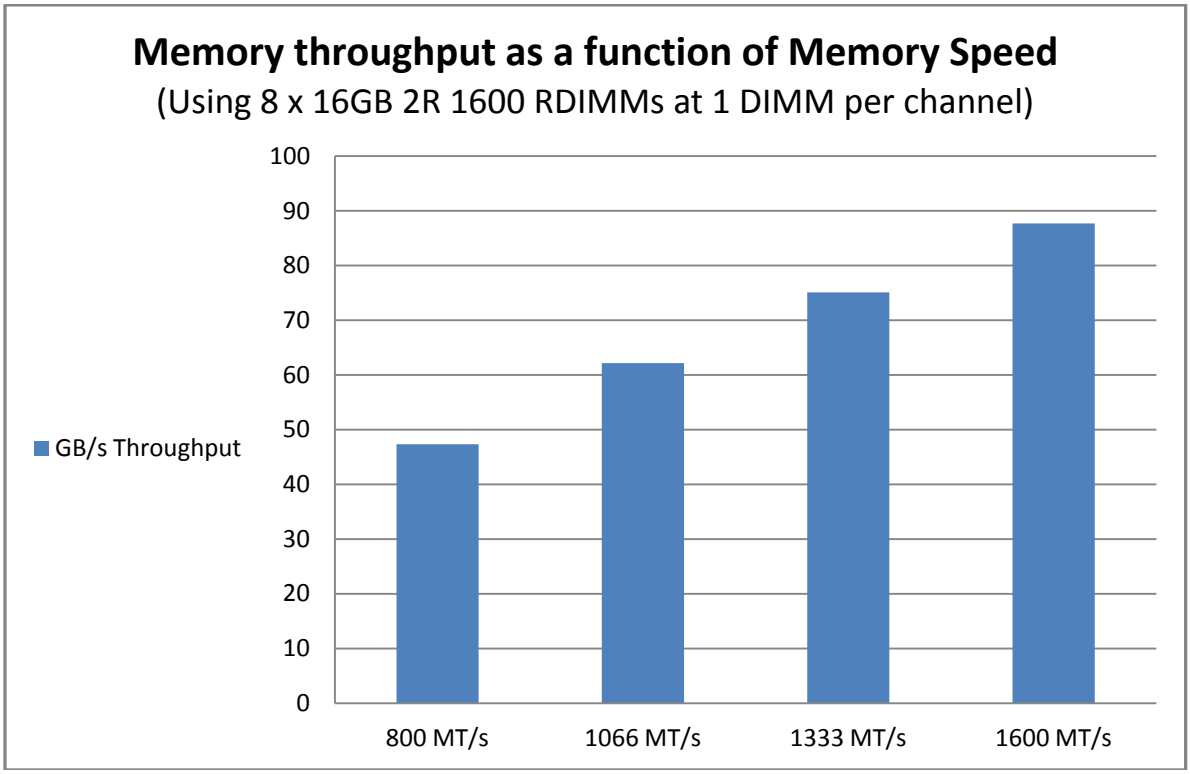

Number of DIMMs per channel and throughput

Figure 10 shows the measured memory throughput for several one and two DIMM per channel configurations. Throughput actually decreases when a second DIMM is added to each channel. With 2 DIMMs per channel installed, the memory controllers use more of the command bus bandwidth issuing refresh cycles to the additional ranks on each channel. This reduces the command bus bandwidth that is available to issue read and write requests and thus causes a reduction in overall throughput. Application workloads that are more sensitive to memory capacity than throughput will still benefit from the second DIMM on each channel.

Figure 10. Throughput by DIMM Type at 1 and 2 DIMMs per channel

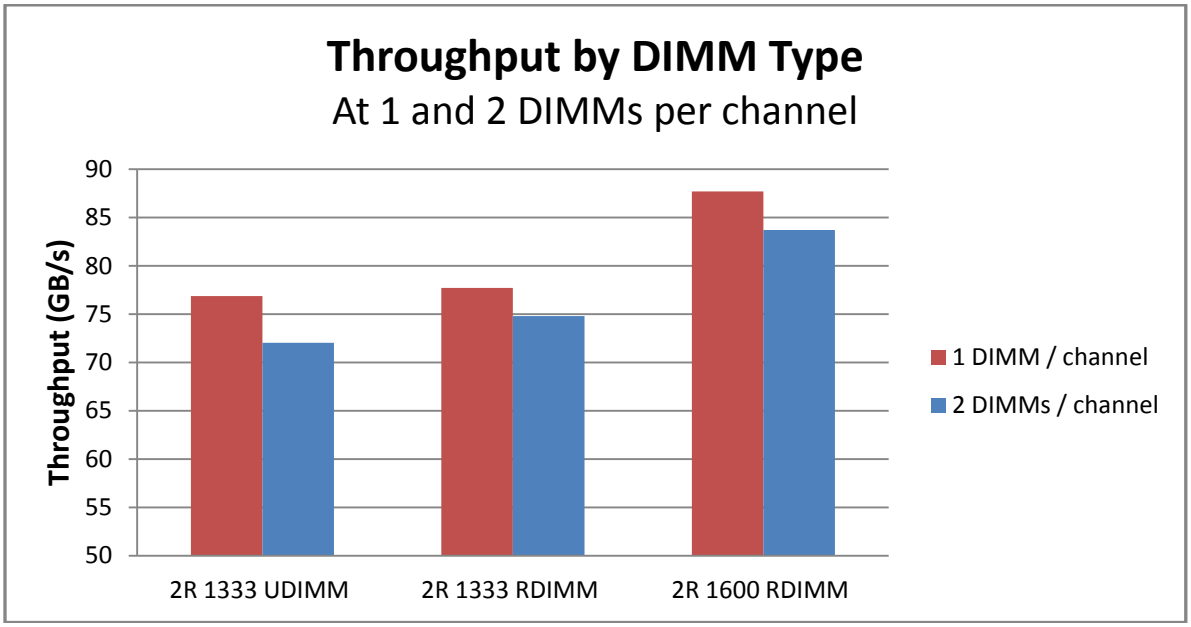

Throughput benefits of two DIMMs per Channel at 1333 MT/s
Although Intel's design supports two UDIMMs per channel running at 1066 MT/s, HP has engineered ProLiant Gen8 servers to reliability operate at 1333 MT/s with 2 DIMMs per channel when using HP SmartMemory. Enabling 1333 MT/s operation for two UDIMMs per channel increases throughput by about 22% and decreases loaded latency by 34% over two DIMMs per channel operating at 1066MHz.

Table 11. Increased throughput with two 4GB 2R LV UDIMMs per channel at 1333 MT/s versus 1066 MT/s

	2 DPC @ 1066 MT/s	2DPC@ 1333 MT/s	Delta
Throughput (GB/s)	59.55	72.30	22% higher
Idle Latency (ns)	65.34	64.97	.5% lower
Loaded Latency (ns)	196.40	129.20	34% lower
Idle Power (16 DIMM) (W)	2.40	2.40	0%
Loaded Power (16 DIMMs) (W)	30.93	39.57	28% higher

Power benefits of multiple DIMMs per channel at 1.35V
HP has also engineered its DDR3 memory to operate at lower voltage than standard industry memory. HP SmartMemory RDIMMs can operate at 1.35V at three DIMMs per channel (3 DPC) at 1066 MT/s. Standard RDIMMs must operate at 1.5V at three DIMMs per channel. As shown in Table 12, 3 DPC operation at 1.35V in a saves almost 20 watts of power in a fully configured 24 slot server.

Table 12. Lower system power consumption with three 8 GB LV RDIMMs per channel at 1.35V vs. 1.5V operation in a 24 slot HP ProLiant Gen8 server

	3 DPC @ 1.5V	3DPC @ 1.35V	Delta
Throughput (GB/s)	60.5	60.5	0%
Idle Power (W)	16.6	15.5	7% lower
Loaded Power (W)	98.6	78.8	20% lower

HP 1333 MT/s SmartMemory LRDIMMs are capable of operating at 1.35V at one and two DIMMs per channel and 1066 MT/s at three DIMMs per channel. Standard RDIMMs require 1.5V operation to maintain 1333 MT/s speed at one and two DIMMs per channel. As Table 13 shows, using HP SmartMemory saves about 20% on power consumption while providing the same performance as standard DIMMs in 2 DIMM per channel configurations.

Table 13. Lower power consumption with two 32 GB LRDIMMs per channel at 1.35V vs. 1.5V operation

	2 DPC @ 1.5V	2DPC @ 1.35V	Delta
Throughput (GB/s)	68.07	68.11	0%
Idle Power	38.4	35.32	9% lower
Loaded Power (W)	139.40	110.8	20% lower

Mixing DIMM sizes

There are no performance implications for mixing sets of different capacity DIMMs at the same operating speed. For example, latency and throughput will not be negatively impacted by installing 8 x 4GB single-rank DDR3-1333 DIMMs (one per channel), plus 8 x 8GB dual-rank DDR3-1333 DIMMs (one per channel).

General guidelines

For optimal throughput and latency, populate all four channels of each installed CPU identically.

Optimizing for lowest power consumption

Several factors determine the power that a DIMM consumes in a system. These include the DIMM technology used as well as the DIMM's capacity, its number of ranks, and its operating speed. Let's take a quick look at each of these to see how they affect power consumption.

DIMM types and power consumption

Because they do not use any buffering, UDIMMs are the lowest power consuming DIMM type. As Figure 11 shows, 4GB UDIMMs consume about 35% less power than the comparable RDIMM. In general larger capacity DIMMs, which are powering multiple ranks of DRAMs, consume more power. However, on a per gigabyte basis they are more efficient. A 32GB LRDIMM consumes 9 watts under load, but this is about one-half the power per GB of an 8 GB RDIMM.

Figure 11. Power by DIMM capacity. Loaded and Idle power for each DIMM type and capacity supported on HP ProLiant Gen8 servers

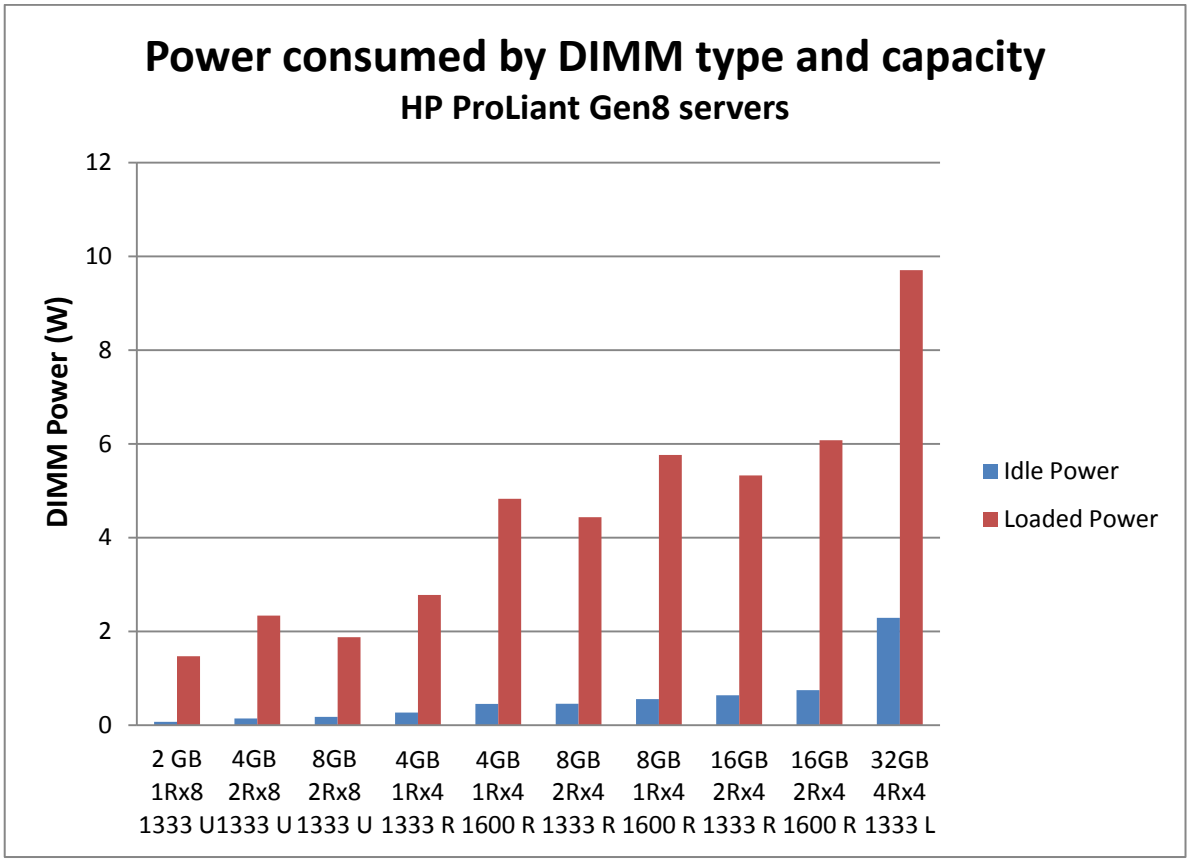

Memory speed and power consumption

As you would expect, DIMMs running at higher speeds consume more power than the same DIMMs running at a lower speed. Memory operating at 1600 MT/s consumes about 30% more power under loaded conditions than the same memory running at 1333 MT/s.

Figure 12. Power by memory speed using 8 x 8GB DIMMs installed at 1DIMM per channel.

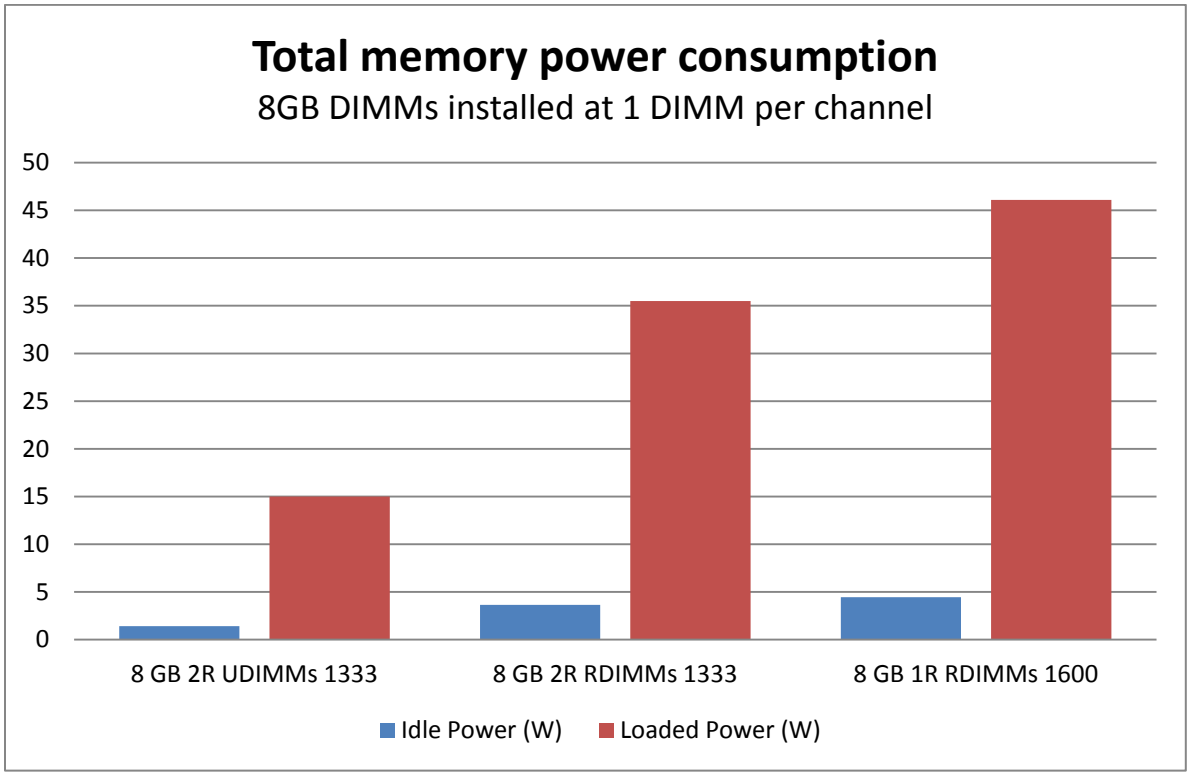

General guidelines when optimizing for power consumption

When optimizing for lowest power consumption, you can use the following general rules.

- If you can meet your memory size requirements with them, use UDIMMs instead of RDIMMs. With their additional memory channels, you can configure 2P ProLiant 24 slot Gen8 servers with as much as 128 GB using UDIMMs.
- Use the smallest number of DIMMs possible, by using the highest capacity DIMM available.
- For additional power savings with any memory configuration, you can run memory at the slowest speed possible. With HP ProLiant Gen8 servers, this is 800 MT/s.

Optimizing for Resiliency

DDR3 DIMMs may be constructed using either 4-bit wide (x4) or 8-bit wide DRAM chips. Current ECC algorithms used in the memory controllers are capable of detecting and correcting memory errors up to 4 bits wide. For DIMMS constructed using x4 DRAMs, this means that an entire DRAM chip on the memory module can fail without causing a failure of the module itself. DIMMs constructed using x8 DRAMs cannot tolerate the failure of DRAM chip. The ECC algorithm can detect the failure, but it cannot correct it. As a result, systems configured with DIMMs using x4 DRAMs are safer from potential memory failures than those using memory consisting of x8 DRAMs. While all UDIMMs are made with x8 DRAMs, RDIMMs and LRDIMMs may be constructed with x4 or x8 DRAMs. To provide the highest levels of availability and resiliency for ProLiant Gen8 servers, all HP SmartMemory RDIMMs and LRDIMMs use only x4 DRAMs.

You can increase the resiliency of servers with UDIMMs by selecting Lock-Step Mode through the ROM-based Setup Utility (RBSU). This allows an entire x8 DRAM failure, but reduces the memory bandwidth of the server by 50%.

Understanding unbalanced memory configurations

Unbalanced memory configurations are those in which the installed memory is not distributed evenly across the memory channels and/or the processors. ISS discourages unbalanced configurations because they will always have lower performance than similar balanced configurations. There are two types of unbalanced configurations, each with its own performance implications.

- **Unbalanced across channels.** A memory configuration is unbalanced across channels if the memory capacities installed on each of the 4 channels of each installed processor are not identical.
- **Unbalanced across processors.** A memory configuration is unbalanced across processors if a different amount of memory is installed on each of the processors.

Memory configurations that are unbalanced across channels

In unbalanced memory configurations across channels, the memory controller will split memory up into regions, as shown in Figure 13. Each region of memory will have different performance characteristics. The memory controller groups memory across channels as much as possible to create the regions. It will create as many regions as possible with DIMMs that span all four memory channels, since these have the highest performance. Next, it will move to create regions that span two memory channels and then to just one.

Figure 13. A memory configuration that is unbalanced across memory channels

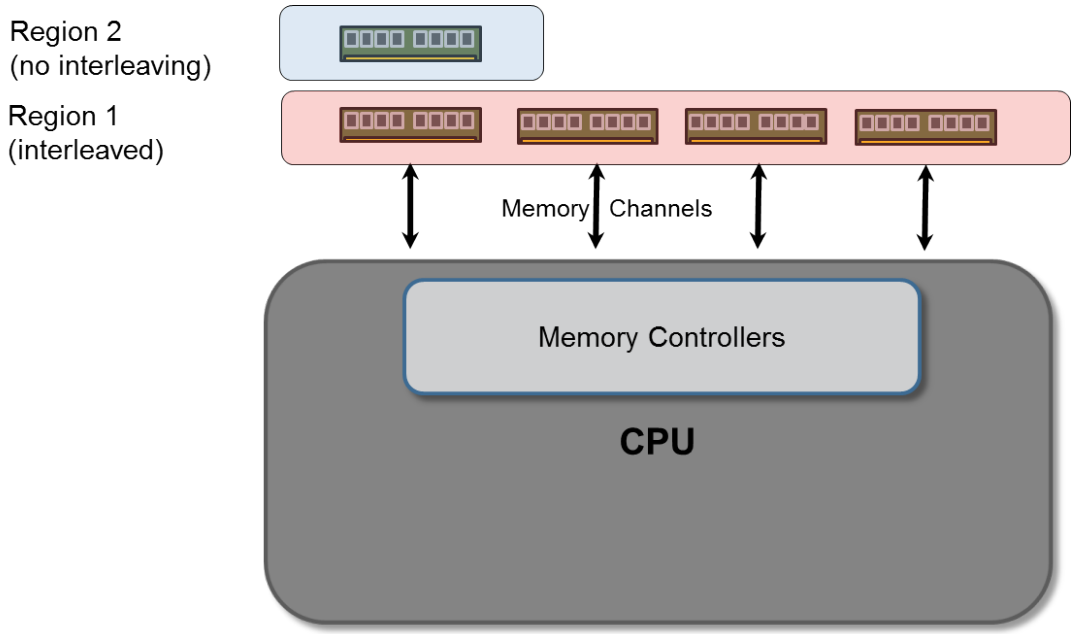

The primary effect of memory configurations that are unbalanced across channels is a decrease in memory throughput in those regions that span fewer memory channels. In the example above, measured memory throughput in Region 2 may be as little as 25% of the throughput in Region 1.

Memory configurations that are unbalanced across Processors

Figure 14 shows a memory configuration that is unbalanced across processors. The CPU1 threads operating on the larger memory capacity of CPU1 may have adequate local memory with relatively low latencies. The CPU2 treads operating on the smaller memory capacity of CPU2 may consume all available memory on CPU2 and request remote memory from CPU1. The longer latencies associated with the remote memory will result in reduced performance of those threads. In practice, this may result in non-uniform performance characteristics for program threads depending on which processor executes them.

Figure 14. A memory configuration that is unbalanced across processors.

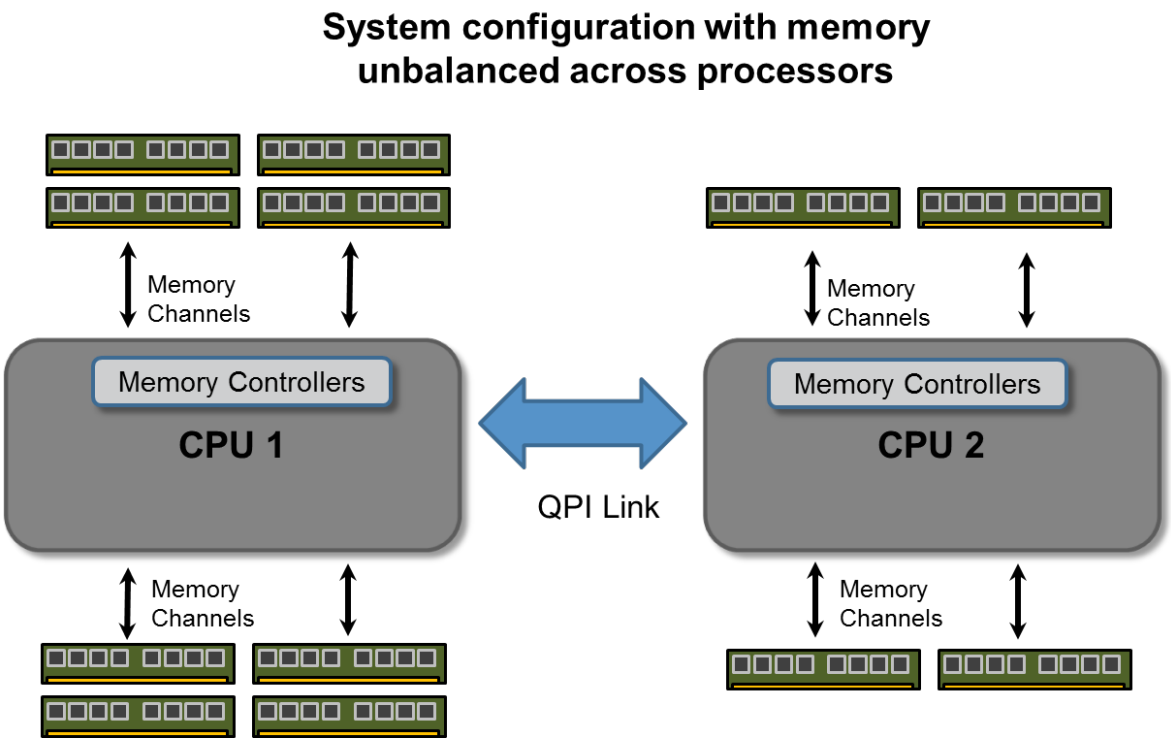

BIOS Settings for memory

The HP server BIOS provides control over several memory configuration settings for ProLiant Gen8 servers. You can access and change these settings using the ROM Based Setup Utility (RBSU), which is part of all HP ProLiant servers. To launch RBSU, press the F9 key during the server boot sequence.

Controlling Memory Speed

Setting Maximum Memory Bus Frequency

Using RBSU, you can set the speed at which the system memory runs to a specific value. This function is available from the Power Management Options menu inside RBSU. With Gen8 servers, memory bus speed can be set to any of the following:

- Automatic (speed determined according to normal population rules)
- 1333 MHz (MT/s)
- 1066 MHz (MT/s)
- 800 MHz (MT/s)

Setting the memory speed to a lower value (1066 MHz or 800MHz, for example) lowers power consumption. However, it will also lower the performance of the memory system.

Setting Memory Interleave

Diasabling Memory Interleaving

This option is available from the Advanced Power Management menu in RBSU. Disabling memory interleaving saves some power per DIMM, but also decreases memory system performance.

Setting Node Interleaving

This option is available from the RBSU Advanced Options menu and controls how the server maps the system memory across the processors. When node interleaving is disabled (the default), BIOS maps the system memory such that the memory addresses for the DIMMs attached to a given processor are together, or contiguous. In typical applications this arrangement is more efficient, allowing the processors to directly access the memory addresses containing the code and data for the programs they are executing. When Node Interleaving is enabled, system memory addresses are alternated, or interleaved, across the DIMMs installed on both processors. In this case, each successive page in the system memory map is physically located on a DIMM attached to a different processor. There may be some workloads, in particular those using shared data sets, that will see improved performance with Node Interleaving enabled.

Figure 15. Node Interleaving setting in the ROM-Based Setup Utility (RBSU)

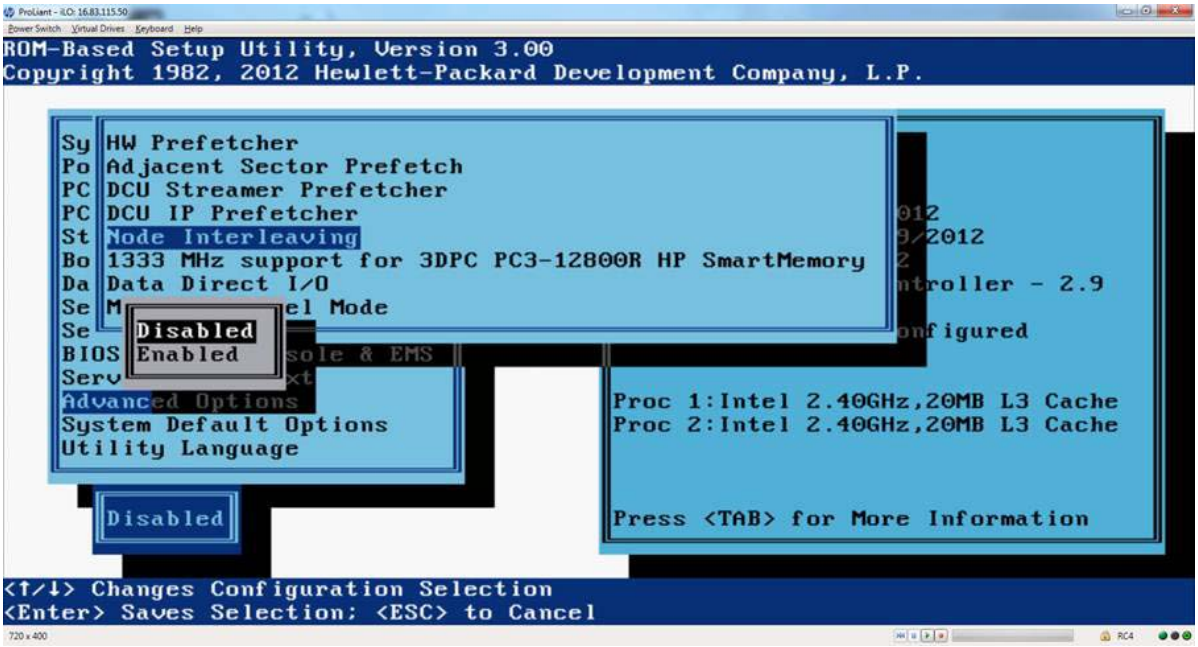

For more information

Visit the URLs listed below if you need additional information.

Resource description	Web address
Online DDR3 Memory Configuration Tool	www.hp.com/go/ddr3memory-configurator
DDR3 memory technology Technology brief, 2nd edition	http://h20000.www2.hp.com/bc/docs/support/SupportManual/c02126499/c02126499.pdf
HP Advanced Memory Error Detection Technology Technology brief	http://h20000.www2.hp.com/bc/docs/support/SupportManual/c02878598/c02878598.pdf

Get connected

hp.com/go/getconnected

Current HP driver, support, and security alerts
delivered directly to your desktop

© Copyright 2012 Hewlett-Packard Development Company, L.P. The information contained herein is subject to change without notice. The only warranties for HP products and services are set forth in the express warranty statements accompanying such products and services. Nothing herein should be construed as constituting an additional warranty. HP shall not be liable for technical or editorial errors or omissions contained herein.

Microsoft and Windows are U.S. registered trademarks of Microsoft Corporation. AMD is a trademark of Advanced Micro Devices, Inc. Intel and Xeon are trademarks of Intel Corporation in the U.S. and other countries. Oracle and Java are registered trademarks of Oracle and/or its affiliates.

Created in August 2012

Appendix A - Sample Configurations for 2P ProLiant Gen8 servers

24 DIMM slot servers using Intel® Xeon® E5-2600 processor series

Sample Memory Configurations (2CPU)	Total Memory (GB)	Number of DIMMs	DIMM Size	DIMM Ranks	DIMM Type (UDIMM, RDIMM, LRDIMM)	Data Rate	DIMMs per Channel	Unloaded Latency (ns)	Loaded Latency (ns)	Throughput (GB/s)	Idle Power (W)	Loaded Power (W)
8 x 2GB 1R 1333 U	16	8	2GB	1R	UDIMM	1333	1	65.0	136.3	74.3	0.6	11.8
8 x 4GB 2R 1333 U	32	8	4GB	2R	UDIMM	1333	1	64.6	140.3	76.1	1.1	18.7
8 x 4GB 1R 1333 R	32	8	4GB	1R	RDIMM	1333	1	65.3	136.0	74.0	2.1	22.2
8 x 4GB 1R 1600 R	32	8	4GB	1R	RDIMM	1600	1	65.0	114.0	81.0	3.6	38.6
16 x 2GB 1R 1333 U	32	16	2GB	1R	UDIMM	1333	2	65.0	125.2	73.5	1.1	29.7
8 x 8GB 2R 1333 U	64	8	8GB	2R	UDIMM	1333	1	65.7	138.8	76.9	1.4	15.0
8 x 8GB 2R 1333 R	64	8	8GB	2R	RDIMM	1333	1	65.0	140.0	77.7	3.6	35.5
8 x 8GB 1R 1600 R	64	8	8GB	1R	RDIMM	1600	1	65.3	115.5	79.8	4.5	46.1
16 x 4GB 2R 1333 U	64	16	4GB	2R	UDIMM	1333	2	65.0	129.2	72.3	2.3	39.6
16 x 4GB 1R 1333 R	64	16	4GB	1R	RDIMM	1333	2	65.0	145.5	74.8	5.6	47.3
16 x 4GB 1R 1600 R	64	16	4GB	1R	RDIMM	1600	2	64.6	115.2	84.3	9.7	78.9
24 x 4GB 1R 1333 R	96	24	4GB	1R	RDIMM	1066	3	65.7	196.0	61.4	8.2	45.6
24 x 4GB 1R 1600 R	96	24	4GB	1R	RDIMM	1333	3	65.3	134.8	72.9	14.0	75.6
8 x 16GB 2R 1333 R	128	8	16GB	2R	RDIMM	1333	1	65.7	138.9	75.3	5.1	42.6
8 x 16GB 2R 1600 R	128	8	16GB	2R	RDIMM	1600	1	65.3	111.0	87.7	6.0	48.6
16 x 8GB 2R 1333 U	128	16	8GB	2R	UDIMM	1333	2	65.3	153.7	72.0	2.9	35.1
16 x 8GB 2R 1333 R	128	16	8GB	2R	RDIMM	1333	2	65.0	152.1	74.8	8.8	74.0
16 x 8GB 1R 1600 R	128	16	8GB	1R	RDIMM	1600	2	64.6	115.8	85.3	11.6	90.0
8 x 32GB 4R 1333 L	256	8	32GB	4R	LRDIMM	1333	1	66.1	122.1	72.4	18.3	77.7
16 x 16GB 2R 1333 R	256	16	16GB	2R	RDIMM	1333	2	65.7	150.7	72.6	11.7	81.2
16 x 16GB 2R 1600 R	256	16	16GB	2R	RDIMM	1600	2	65.0	121.4	83.7	13.8	94.2
24 x 16GB 2R 1333 R	384	24	16GB	2R	RDIMM	1066	3	66.1	161.4	60.0	17.5	79.2
24 x 16GB 2R 1600 R	384	24	16GB	2R	RDIMM	1066	3	65.4	161.9	59.5	20.3	87.9
24 x 16GB 2R 1333 H	384	24	16GB	2R	HDIMM	1333	2	65.7	114.0	72.4	144.5	286.1
16 x 32GB 4R 1333 L	512	16	32GB	4R	LRDIMM	1333	2	66.8	138.9	68.1	35.3	110.8
24 x 32GB 4R 1333 L	768	24	32GB	4R	LRDIMM	1066	3	70.9	235.0	40.4	55.9	121.6
24 x 8GB 2R 1333 R	192	24	8GB	2R	RDIMM	1066	3	65.3	189.0	60.5	15.5	78.8

16 DIMM Slot Servers using Intel® Xeon® E5-2600 series processors

Sample Memory Configurations	Total Memory (GB)	Number of DIMMs	DIMM Size	DIMM Rank	DIMM Type (UDIMM, RDIMM, LRDIMM)	Data Rate	DIMMs per Channel	Unloaded Latency (ns)	Loaded Latency (ns)	Throughput (GB/s)	Idle Power (W)	Loaded Power (W)
8 x 2GB 1R 1333 U	16	8	2GB	1R	UDIMM	1333	1	65.0	136.3	74.3	0.56	11.8
8 x 4GB 2R 1333 U	32	8	4GB	2R	UDIMM	1333	1	64.6	140.3	76.1	1.13	18.7
8 x 4GB 1R 1333 R	32	8	4GB	1R	RDIMM	1333	1	65.3	136.0	74.0	2.14	22.2
8 x 4GB 1R 1600 R	32	8	4GB	1R	RDIMM	1600	1	65.0	114.0	81.0	3.61	38.6
16 x 2GB 1R 1333 U	32	16	2GB	1R	UDIMM	1333	2	65.0	125.2	73.5	1.12	29.7
8 x 8GB 2R 1333 U	64	8	8GB	2R	UDIMM	1333	1	65.7	138.8	76.9	1.41	15.0
8 x 8GB 2R 1333 R	64	8	8GB	2R	RDIMM	1333	1	65.0	140.0	77.7	3.64	35.5
8 x 8GB 1R 1600 R	64	8	8GB	1R	RDIMM	1600	1	65.3	115.5	79.8	4.45	46.1
16 x 4GB 2R 1333 U	64	16	4GB	2R	UDIMM	1333	2	65.0	129.2	72.3	2.25	39.5
16 x 4GB 1R 1333 R	64	16	4GB	1R	RDIMM	1333	2	65.0	145.5	74.8	5.55	47.3
16 x 4GB 1R 1600 R	64	16	4GB	1R	RDIMM	1600	2	64.6	115.2	84.3	9.67	78.9
8 x 16GB 2R 1333 R	128	8	16GB	2R	RDIMM	1333	1	65.7	138.9	75.3	5.10	42.6
8 x 16GB 2R 1600 R	128	8	16GB	2R	RDIMM	1600	1	65.3	111.0	87.7	5.98	48.6
16 x 8GB 2R 1333 U	128	16	8GB	2R	UDIMM	1333	2	65.3	153.7	72.0	2.87	35.1
16 x 8GB 2R 1333 R	128	16	8GB	2R	RDIMM	1333	2	65.0	152.1	74.8	8.79	74.0
16 x 8GB 1R 1600 R	128	16	8GB	1R	RDIMM	1600	2	64.6	115.8	85.3	11.57	90.0
8 x 32GB 4R 1333 L	256	8	32GB	4R	LRDIMM	1333	1	66.1	122.1	72.4	18.32	77.7
16 x 16GB 2R 1333 R	256	16	16GB	2R	RDIMM	1333	2	65.7	150.7	72.6	11.73	81.2
16 x 16GB 2R 1600 R	256	16	16GB	2R	RDIMM	1600	2	65.0	121.4	83.7	13.75	94.2
16 x 32GB 4R 1333 L	512	16	32GB	4R	LRDIMM	1333	2	66.8	138.9	68.1	35.32	110.8

12 DIMM Slot Servers using Intel® Xeon® E5-2400 series processors

Sample Memory Configurations	Total Memory (GB)	Number of DIMMs	DIMM Size	DIMM Rank	DIMM Type (UDIMM, RDIMM, LRDIMM)	Data Rate	DIMMs per Channel	Unloaded Latency (ns)	Loaded Latency (ns)	Throughput (GB/s)	Idle Power (W)	Loaded Power (W)
6 x 2GB 1R 1333 U	12	6	2GB	1R	UDIMM	1333	1	71.4	104.4	52.1	0.5	8.0
6 x 4GB 2R 1333 U	24	6	4GB	2R	UDIMM	1333	1	71.0	104.4	48.2	0.8	12.9
6 x 4GB 1R 1333 R	24	6	4GB	1R	RDIMM	1333	1	71.4	104.8	47.8	1.4	14.8
6 x 4GB 1R 1600 R	24	6	4GB	1R	RDIMM	1600	1	66.7	94.1	57.5	1.6	25.2
12 x 2GB 1R 1333 U	24	12	2GB	1R	UDIMM	1333	2	71.0	108.2	52.7	0.9	21.9
6 x 8GB 2R 1333 U	48	6	8GB	2R	UDIMM	1333	1	71.8	106.1	49.9	1.1	10.4
6 x 8GB 2R 1333 R	48	6	8GB	2R	RDIMM	1333	1	71.0	101.9	50.1	2.1	25.2
6 x 8GB 1R 1600 R	48	6	8GB	1R	RDIMM	1600	1	68.0	95.5	59.7	1.7	21.7
12 x 4GB 2R 1333 U	48	12	4GB	2R	UDIMM	1333	2	71.4	109.9	48.3	1.7	29.2
12 x 4GB 1R 1333 R	48	12	4GB	1R	RDIMM	1333	2	71.0	106.9	52.7	4.6	33.7
12 x 4GB 1R 1600 R	48	12	4GB	1R	RDIMM	1600	2	66.7	95.0	58.7	3.8	55.9
6 x 16GB 2R 1333 R	96	6	16GB	2R	RDIMM	1333	1	71.8	106.9	50.5	3.2	29.4
6 x 16GB 2R 1600 R	96	6	16GB	2R	RDIMM	1600	1	68.0	95.0	55.0	3.4	33.4
12 x 8GB 2R 1333 U	96	12	8GB	2R	UDIMM	1333	2	72.3	111.4	49.9	2.1	25.7
12 x 8GB 2R 1333 R	96	12	8GB	2R	RDIMM	1333	2	71.0	108.6	48.5	4.9	53.6
12 x 8GB 1R 1600 R	96	12	8GB	1R	RDIMM	1600	2	68.0	96.8	55.9	4.0	51.1
6 x 32GB 4R 1333 L	192	6	32GB	4R	LRDIMM	1333	1	72.3	109.5	50.5	7.6	43.0
12 x 16GB 2R 1333 R	192	12	16GB	2R	RDIMM	1333	2	72.3	110.7	49.3	7.0	58.8
12 x 16GB 2R 1600 R	192	12	16GB	2R	RDIMM	1600	2	68.0	96.8	57.7	4.1	51.1
12 x 32GB 4R 1333 L	384	12	32GB	4R	LRDIMM	1333	2	72.3	121.5	50.2	15.5	68.5