Overview

The Rambus Direct RDRAM™ is a general purpose high-performance memory device suitable for use in a broad range of applications including computer memory, graphics, video, and any other application where high bandwidth and low latency are required.

The 64/72-Mbit Direct Rambus DRAMs (RDRAM®) are extremely high-speed CMOS DRAMs organized as 4M words by 16 or 18 bits. The use of Rambus Signaling Level (RSL) technology permits 600MHz or 800MHz transfer rates while using conventional system and board design technologies. Direct RDRAM devices are capable of sustained data transfers at 1.25 ns per two bytes (10ns per sixteen bytes).

The architecture of the Direct RDRAMs allows the highest sustained bandwidth for multiple, simultaneous randomly addressed memory transactions. The separate control and data buses with independent row and column control yield over 95% bus efficiency. The Direct RDRAM's sixteen banks support up to four simultaneous transactions.

System oriented features for mobile, graphics and large memory systems include power management, byte masking, and x18 organization. The two data bits in the x18 organization are general and can be used for additional storage and bandwidth or for error correction.

Features

- Highest sustained bandwidth per DRAM device
  - 1.6GB/s sustained data transfer rate
  - Separate control and data buses for maximized efficiency
  - Separate row and column control buses for easy scheduling and highest performance
  - 16 banks: four transactions can take place simultaneously at full bandwidth data rates
- Low latency features
  - Write buffer to reduce read latency
  - 3 precharge mechanisms for controller flexibility
  - Interleaved transactions
- Advanced power management:
  - Multiple low power states allows flexibility in power consumption versus time to transition to active state
  - Power-down self-refresh
- Organization: 1Kbyte pages and 16 banks, x 16/18
  - x18 organization allows ECC configurations or increased storage/bandwidth
  - x16 organization for low cost applications
- Uses Rambus Signaling Level (RSL) for up to 800MHz operation

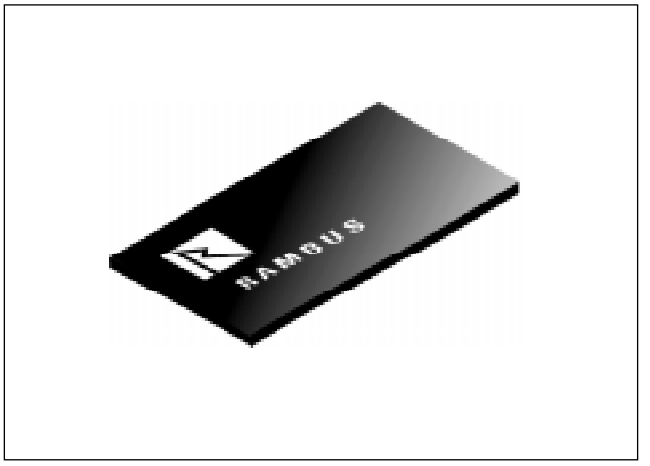

Figure 1: Direct RDRAM CSP Package

The 64/72-Mbit Direct RDRAMs are offered in a CSP horizontal package suitable for desktop as well as low-profile add-in card and mobile applications.

Direct RDRAMs operate from a 2.5 volt supply.

Key Timing Parameters/Part Numbers

Organization[a]	I/O Freq. MHz	t_{rac} (Row Access Time) ns	Part Number
256Kx16x16d	600	60	64MD-60-600
256Kx16x16d	800	50	64MD-50-800
256Kx16x16d	800	45	64MD-45-800
256Kx16x16d	800	40	64MD-40-800
256Kx18x16d	600	60	72MD-60-600
256Kx18x16d	800	50	72MD-50-800
256Kx18x16d	800	45	72MD-45-800
256Kx18x16d	800	40	72MD-40-800

a. The “16d” designation indicates that this RDRAM core is composed of 16 banks which use a “doubled” bank architecture.

Related Documentation

RIMM Data Sheet DL-0053-00

SPD Application Brief DL-0054-00

Netlist EX2025
Samsung v Netlist
IPR2023-00455

Pinouts and Definitions

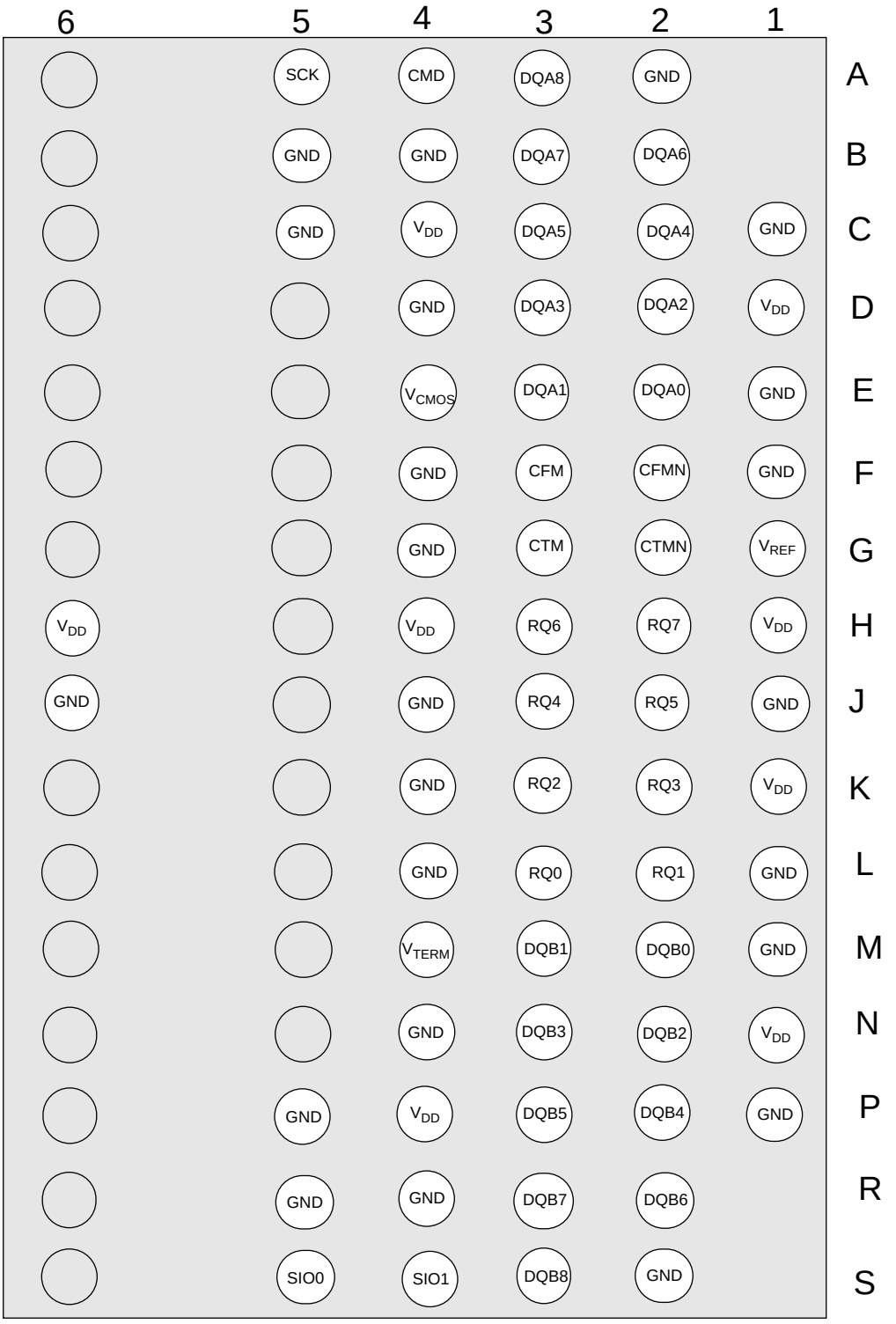

Figure 2: Pinout Definitions

Netlist EX2025
Samsung v Netlist
IPR2023-00455

Pins	Signal	I/O	Type	Description
S5, S4	SIO1 SIO0	I/O	CMOS	Serial input/output. Pins for reading from and writing to the control registers using a serial access protocol. Also used for power management.
A4	CMD	I	CMOS	Command input. Pins for reading from and writing to the control registers. Also used for power management.
A5	SCK	I	CMOS	Clock input. Clock source used for reading from and writing to the control registers
C4, D1, H1, H4, H6, K1, N1, P4	V_{DD}			Supply voltage for the RDRAM core and interface logic.
E4, M4	V_{CMOS}			Termination voltage for RSL load resistors.
A2, B4, B5, C1, C5, D4, E1, F1, F4, G4, J1, J4, J6, K4, L1, L4, M1, N4, P1, P5, R4, R5, S2	GND			Ground reference for RDRAM core and interface.
A3, B3, B2, C3, C2, D3, D2, E3, E2	DQA8..DQA0	I/O	RSL	Data byte A. Nine pins which carry a byte of read or write data between the channel and the RDRAM.
F3	CFM	I	RSL	Clock from master. Interface clock used for receiving RSL signals from the channel. Positive polarity.
F2	CFMN	I	RSL	Clock from master. Interface clock used for receiving RSL signals from the channel. Negative polarity
G1	V_{REF}			Logic threshold reference voltage for RSL signals
G2	CTMN	I	RSL	Clock to master. Interface clock used for transmitting RSL signals to the channel. Negative polarity.
G3	CTM	I	RSL	Clock to master. Interface clock used for transmitting RSL signals to the channel. Positive polarity.
H2, H3, J2	RQ7..RQ5 or ROW2..ROW0	I	RSL	Row access control. Three pins containing control and address information for row accesses.
J3, K2, K3, L2,L3	RQ4..RQ0 or COL4..COL0	I	RSL	Column access control. Five pins containing control and address information for column accesses.
S3, R3, R2, P3, P2, N3, N2, M3, M2	DQB8.. DQB0	I/O	RSL	Data byte B. Nine pins which carry a byte of read or write data between the channel and the RDRAM.

Table 1: Pin Descriptions

Netlist EX2025
Samsung v Netlist
IPR2023-00455

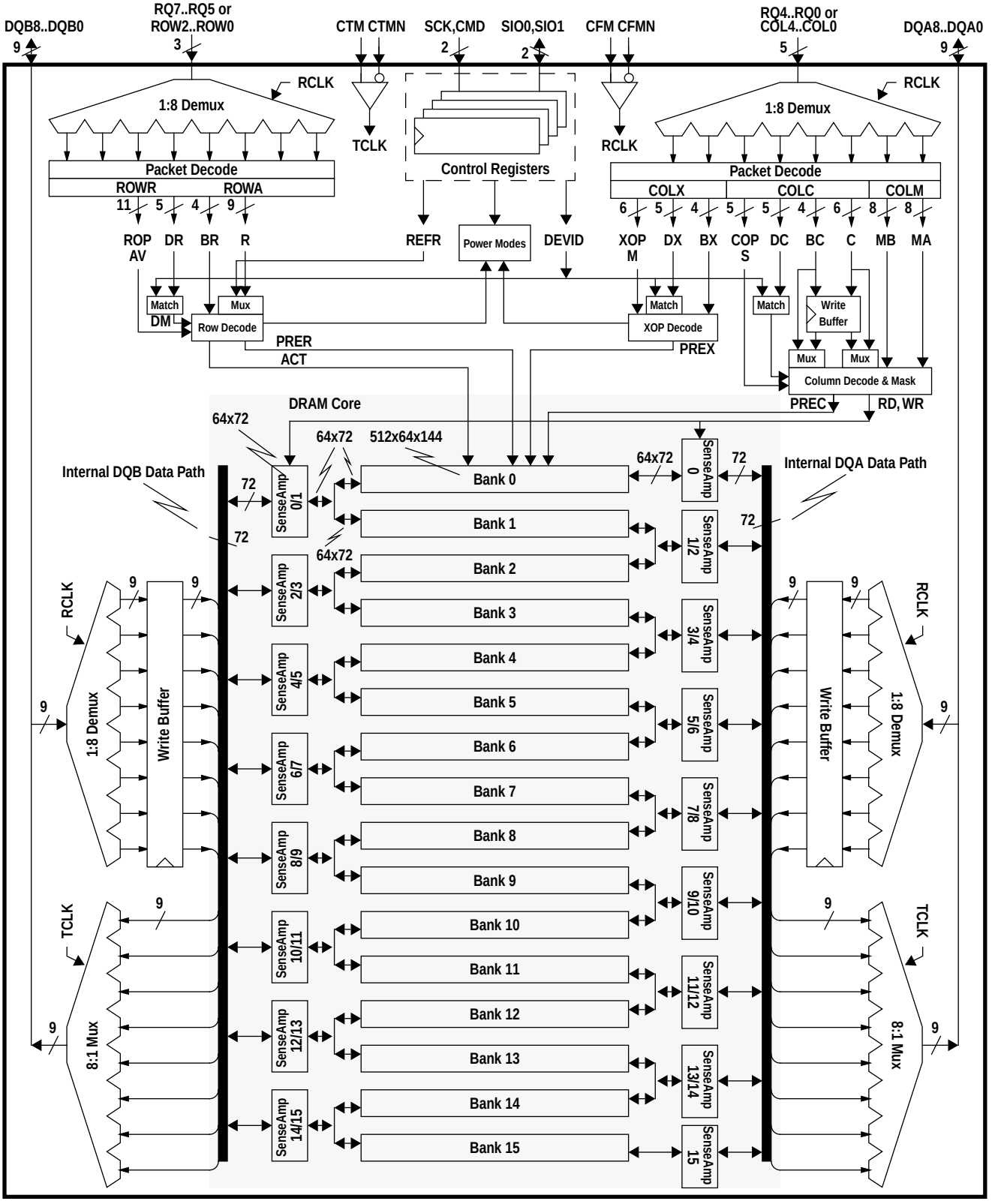

Figure 3: 64/74Mbit Direct RDRAM Block Diagram

Netlist EX2025
Samsung v Netlist
IPR2023-00455

General Description

Figure 3 is a block diagram of the 64/72Mbit Direct RDRAM. It consists of two major blocks: a "core" block built from banks and sense amps similar to those found in other types of DRAM, and a Direct Rambus interface block which permits an external controller to access this core at up to 1.6GB/s.

Control Registers: The CMD, SCK, SIO0, and SIO1 pins appear in the upper center of the figure. They are used to write and read a block of control registers. These registers supply the RDRAM configuration information to a controller and they select the operating modes of the device. The nine bit REFR value is used for tracking the last refreshed row. Most importantly, the five bit DEVID specifies the device address of the RDRAM on the Channel.

Clocking: The CTM and CTMN pins (Clock-To-Master) generate TCLK (Transmit Clock), the internal clock used to transmit read data. The CFM and CFMN pins (Clock-From-Master) generate RCLK (Receive Clock), the internal clock signal used to receive write data and to receive the ROW and COL pins.

DQA,DQB Pins: These 18 pins carry read (Q) and write (D) data across the Channel. They are multiplexed/de-multiplexed from/to two 72-bit data paths (running at one-eighth the data frequency) inside the RDRAM.

Banks: The 8Mbyte core of the RDRAM is divided into sixteen 0.5Mbyte banks, each organized as 512 rows, with each row containing 64 dualocts, and each dualoct containing 16 bytes. A dualoct is the smallest unit of data that can be addressed.

Sense Amps: The RDRAM contains 17 sense amp arrays. Each sense amp consists of 512 bytes of fast storage and can hold one-half of one row of one bank of the RDRAM. The sense amp may hold any of the 512 half-rows of an associated bank. However, each sense amp is shared between two adjacent banks of the RDRAM (except for number 0 and number 15). This introduces the restriction that adjacent banks may not be simultaneously accessed.

RQ Pins: These pins carry control and address information. They are broken into two groups. RQ7..RQ5 are also called ROW2..ROW0, and are used primarily for controlling row accesses. RQ4..RQ0 are also called COL4..COL0, and are used primarily for controlling column accesses.

ROW Pins: The principle use of these three pins is to manage the transfer of data between the banks and the sense amps of the RDRAM. These pins are de-multiplexed into a 24-bit ROWA (row-activate) or ROWR (row-operation) packet.

COL Pins: The principle use of these five pins is to manage the transfer of data between the DQA/DQB pins and the sense amps of the RDRAM. These pins are de-multiplexed into a 23-bit COLC (column-operation) packet and either a 17-bit COLM (mask) packet or a 17-bit COLX (extended-operation) packet.

ACT Command: An ACT (activate) command from an ROWA packet causes one of the 512 rows of the selected bank to be loaded to its two associated sense amps.

PRER Command: A PRER (precharge) command from an ROWR packet causes the selected bank to release its two associated sense amps, permitting a different row to be activated, or permitting adjacent banks to be activated.

RD Command: The RD (read) command causes one of the 64 dualocts of one of the sense amp arrays to be transmitted on the DQA/DQB pins of the Channel.

WR Command: The WR (write) command causes a dualoct received from the DQA/DQB data pins of the Channel to be loaded into the write buffer. There is also space in the write buffer for the BC bank address and C column address information. The data in the write buffer is automatically retired (written with optional bytemask) to one of the 64 dualocts of one of the sense amp arrays during a subsequent COP command. A retire can take place during a RD or WR to another device, or during a WR or NOCOP to the same device. The write buffer will not retire during a RD to the same device. The write buffer reduces the delay needed for the internal DQA/DQB data path turn-around.

PREC Precharge: The RDA and WRA commands are similar to RD and WR, except that a precharge operation (PREC) is scheduled at the end of the data transfer. These commands provide a second mechanism for performing precharge.

PREX Precharge: After a RD command, or after a WR command with no byte masking (M=0), a COLX packet may be used to specify an extended operation (XOP). The most important XOP command is PREX. This command provides a third mechanism for performing precharge.

Netlist EX2025
Samsung v Netlist
IPR2023-00455

Packet Format

Figure 4 shows the formats of the ROWA and ROWR packets on the ROW pins. Table 2 describes the fields which comprise these packets. DR4T and DR4F bits are encoded to contain both the DR4 device address bit and a framing bit which allows the ROWA or ROWR packet to be recognized by the RDRAM.

The AV (ROWA / ROWR packet selection) bit distinguishes between the two packet types. Both the ROWA and ROWR packet provide a five bit device address and a four bit bank address. An ROWA packet uses the remaining bits to specify a nine bit row address, and the ROWR packet uses the remaining bits for an eleven bit opcode field. Note the use of the "RsvX" notation to reserve bits for future address field extension.

Table 2: Field Description for ROWA Packet and ROWR Packet

Field	Description
DR4T,DR4F	Bits for framing (recognizing) a ROWA or ROWR packet. Also encodes highest device address bit.
DR3..DR0	Device address for ROWA or ROWR packet.
BR3..BR0	Bank address for ROWA or ROWR packet. RsvB denotes bits reserved for future address extension.
AV	Selects between ROWA packet (AV=1) and ROWR packet (AV=0).
R8..R0	Row address for ROWA packet. RsvR denotes bits reserved for future row address extension.
ROP10..ROP0	Opcode field for ROWR packet. Specifies precharge, refresh, and power management functions.

Figure 4 also shows the formats of the COLC, COLM, and COLX packets on the COL pins. Table 3 describes the fields which comprise these packets.

The COLC packet uses the S (Start) bit for framing. A COLM or COLX packet is aligned with this COLC packet, and is also framed by the S bit.

The 23 bit COLC packet has a five bit device address, a four bit bank address, a six bit column address, and a four bit opcode. The COLC packet specifies a read or write command, as well as some power management commands.

The remaining 17 bits are interpreted as a COLM (M=1) or COLX (M=0) packet. A COLM packet is used for a COLC write command which needs bytemask control. The COLM packet is associated with the COLC packet from a time t_{RTR} earlier. An COLX packet may be used to specify an independent precharge command. It contains a five bit device address, a four bit bank address, and a five bit opcode. The COLX packet may also be used to specify some housekeeping and power management commands. The COLX packet is framed within a COLC packet but is not otherwise associated with any other packet.

Table 3: Field Description for COLC Packet, COLM Packet, and COLX Packet

Field	Description
S	Bit for framing (recognizing) a COLC packet, and indirectly for framing COLM and COLX packets.
DC4..DC0	Device address for COLC packet.
BC3..BC0	Bank address for COLC packet. RsvB denotes bits reserved for future bank address extension.
C5..C0	Column address for COLC packet. RsvC denotes bits reserved for future column address extension.
COP3..COP0	Opcode field for COLC packet. Specifies read, write, precharge, and power management functions.
M	Selects between COLM packet (M=1) and COLX packet (M=0).
MA7..MA0	Bytemask write control bits. 1=write, 0=no-write. MA0 controls earliest byte on DQA8..0.
MB7..MB0	Bytemask write control bits. 1=write, 0=no-write. MB0 controls earliest byte on DQB8..0.
DX4..DX0	Device address for COLX packet.
BX3..BX0	Bank address for COLX packet. RsvB denotes bits reserved for future bank address extension.
XOP4..XOP0	Opcode field for COLX packet. Specifies precharge, I_{OL} control, and power management functions.

Netlist EX2025
Samsung v Netlist
IPR2023-00455

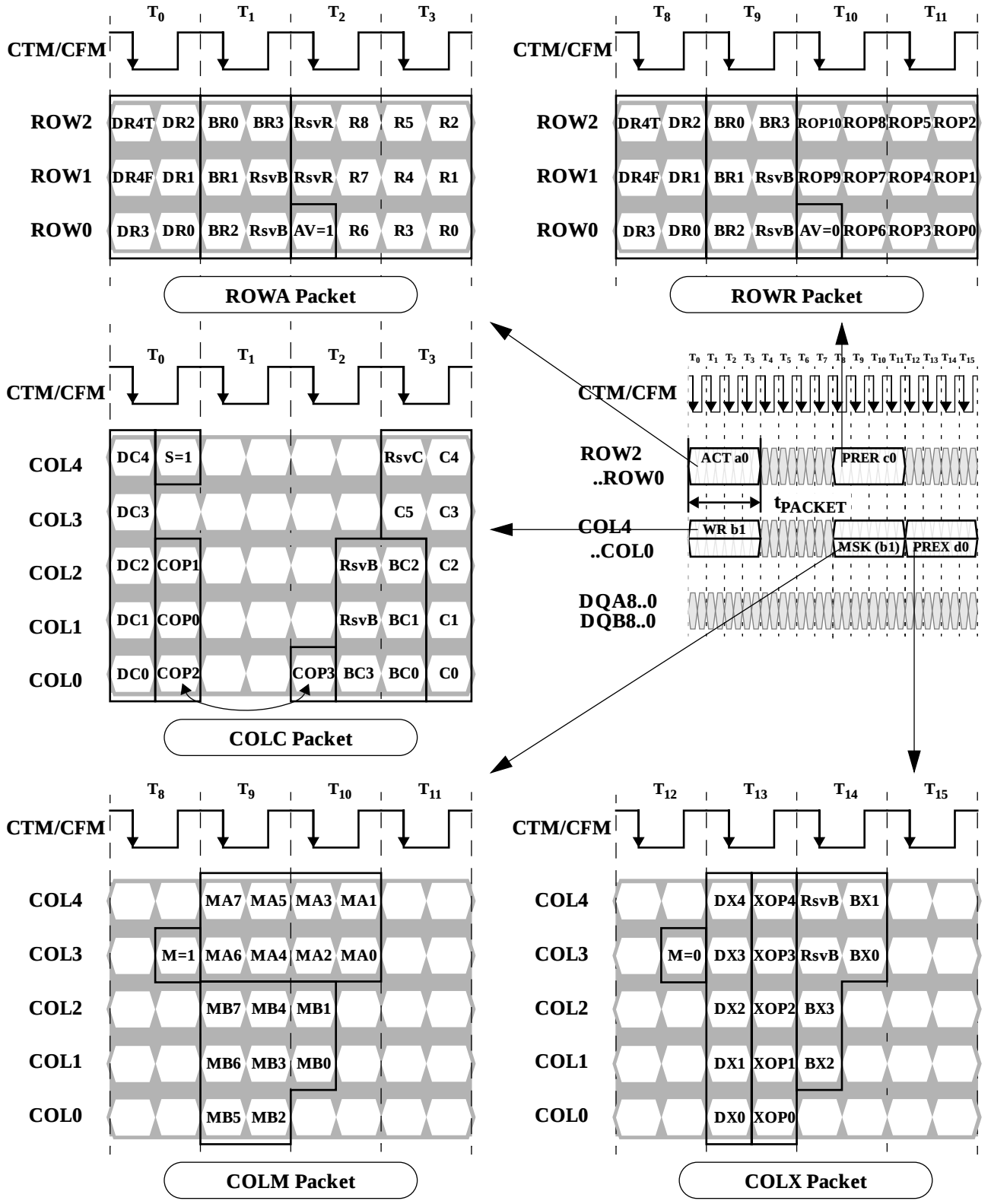

Figure 4: Packet Formats

Netlist EX2025
Samsung v Netlist
IPR2023-00455

Field Encoding Summary

Table 4 shows how the six device address bits are decoded for the ROWA and ROWR packets. The DR4T and DR4F encoding merges a fifth device bit with a framing bit. When neither bit is asserted, the device is not selected. Note that a broadcast operation is indicated when both bits are set. Broadcast operation would typically be used for refresh and power management commands. If the device is selected, the DM (DeviceMatch) signal is asserted and an ACT or ROP command is performed.

Table 4: Device Field Encodings for ROWA Packet and ROWR Packet

DR4T	DR4F	Device Selection	Device Match signal (DM)[a]
1	1	All devices (broadcast)	DM == 1
0	1	One device selected	DM == 1 if {DEVID4..DEVID0} == {0,DR3..DR0} else DM = 0
1	0	One device selected	DM == 1 if {DEVID4..DEVID0} == {1,DR3..DR0} else DM = 0
0	0	No packet present	DM == 0

a. “/=” means not equal, “==” means equal.

Table 5 shows the encodings of the remaining fields of the ROWA and ROWR packets. An ROWA packet is specified by asserting the AV bit. This causes the specified row of the specified bank of this device (the device with DM asserted) to be loaded into the two associated sense amps.

An ROWR packet is specified when AV is not asserted. An 11 bit opcode field encodes a command for one of the banks of this device. The PRER command causes a bank and its two associated sense amps to precharge, so another row or an adjacent bank may be activated.

The REFA (refresh-activate) command is identical to the ACT command, except the row address comes from an internal register REFR. The REFP (refresh-precharge) command is identical to a PRER command except that REFR is incremented at the largest bank address.

The NAPR, NAPRC, PDNR, and RLXR commands are used for managing the power dissipation of the RDRAM. They are described in more detail in “Power State Management” on page 34.

Table 5: ROWA Packet and ROWR Packet Field Encodings

DM[a]	AV	ROP10..ROP0 Field									Command Name	Command Description
		10	9	8	7	6	5	4	3	2,1,0		
0	x	x	x	x	x	x	x	x	x	xxx	-	No operation.
1	1	x	x	x	x	x	x	x	x	xxx	ACT	Activate row R8..R0 of bank BR3..BR0 of this device.
1	0	1	1	0	0	0	x	x	x	000	PRER	Precharge bank BR3..BR0 of this device.
1	0	0	0	0	1	1	0	0	x	000	REFA	Refresh (activate) row REFR8..REFR0 of bank BR3..BR0 of this device.
1	0	1	0	1	0	1	0	0	x	000	REFP	Precharge bank BR3..BR0 of this device and increment REFR if BR3..BR0 = 1111.
1	0	x	x	0	0	0	0	1	x	000	PDNR	PowerDown this device.
1	0	x	x	0	0	0	1	0	x	000	NAPR	NapDown this device.
1	0	x	x	0	0	0	1	1	x	000	NAPRC	NapDown this device conditionally.
1	0	x	x	x	x	x	x	x	1	000	RLXR	Relax this device.
1	0	0	0	0	0	0	0	0	0	000	NOROP	No operation.

a. The DM (Device Match signal) value is determined by the DR4T,DR4F, DR3..DR0 field of the ROWA and ROWR packets. See Table 4.

Netlist EX2025
Samsung v Netlist
IPR2023-00455

Table 6 shows the COP field encoding. The COLC packet is used primarily to specify RD (read) and WR (write) commands. Retire operations (moving data from the write buffer to a sense amp) happen automatically. See Figure 18 for a more detailed description.

The COLC packet can also specify a PREC command, which precharges a bank and its associated sense amps. The RDA / WRA commands are equivalent to a RD / WR followed by a PREC. RLXC (relax) performs a power mode transition. See "Power State Management" on page 34.

Table 6: COLC Packet Field Encodings

S	DC4.. DC0 (selects one device)	COP 3	COP 2	COP 1	COP 0	Command Name	Command Description
0	xxxxx	x	x	x	x	-	No operation.
1	/ = (DEVID4 .. DEVID0)	x	x	x	x	-	Retire write buffer of this device.
1	== (DEVID4 .. DEVID0)	x	0	0	0	NOCOP	Retire write buffer of this device.
1	== (DEVID4 .. DEVID0)	x	0	0	1	WR	Retire write buffer of this device, then write column C5..C0 of bank BC3..BC0 to the write buffer.
1	== (DEVID4 .. DEVID0)	x	0	1	0	RSRV	Reserved, no operation.
1	== (DEVID4 .. DEVID0)	x	0	1	1	RD	Read column C5..C0 of bank BC3..BC0 of this device.
1	== (DEVID4 .. DEVID0)	x	1	0	0	PREC	Retire write buffer of this device, then precharge bank BC3..BC0.
1	== (DEVID4 .. DEVID0)	x	1	0	1	WRA	Same as WR, but precharge bank BC3..BC0 after the write buffer (with new data) of this device is retired.
1	== (DEVID4 .. DEVID0)	x	1	1	0	RSRV	Reserved, no operation.
1	== (DEVID4 .. DEVID0)	x	1	1	1	RDA	Same as RD, but precharge bank BC3..BC0 afterward.
1	== (DEVID4 .. DEVID0)	1	x	x	x	RLXC	Relax this device.

Table 7 shows the COLM and COLX field encodings. The M bit is asserted to specify a COLM packet with two 8 bit bytemask fields MA and MB. If the M bit is not asserted, an COLX is specified. It has device and bank address fields, and an opcode field. The primary use of the COLX packet is to permit an independent PREX (precharge) command to be specified without consuming control bandwidth on the ROW pins. It is also used for the CAL(calibrate) and SAM (sample) current control commands (see Figure 37), and for the RLXX power mode command (see "Power State Management" on page 34).

Table 7: COLM Packet and COLX Packet Field Encodings

M	DX4 .. DX0 (selects one device)	XOP 4	XOP 3	XOP 2	XOP 1	XOP 0	Command Name	Command Description
1	xxxxx	x	x	x	x	x	MSK	MB / MA bytemasks used by WR / WRA.
0	/ = (DEVID4 .. DEVID0)	x	x	x	x	x	-	No operation.
0	== (DEVID4 .. DEVID0)	0	0	0	0	0	NOXOP	No operation.
0	== (DEVID4 .. DEVID0)	1	x	x	x	0	PREX	Precharge bank BX3..BX0 of this device.
0	== (DEVID4 .. DEVID0)	x	1	x	x	0	CAL	Calibrate (drive) I_{OL} current for this device.
0	== (DEVID4 .. DEVID0)	x	x	1	x	0	SAM	Sample (update) I_{OL} current for this device.
0	== (DEVID4 .. DEVID0)	x	x	x	1	0	RLXX	Relax this device.
0	== (DEVID4 .. DEVID0)	x	x	x	x	1	RSRV	Reserved, no operation.

Netlist EX2025
Samsung v Netlist
IPR2023-00455

DQ Packet Timing

Figure 5 shows the timing relationship of COLC packets with D and Q data packets. This document uses a specific convention for measuring time intervals between packets: all packets on the ROW and COL pins (ROWA, ROWR, COLC, COLM, COLX) use the trailing edge of the packet as a reference point, and all packets on the DQA / DQB pins (D and Q) use the leading edge of the packet as a reference point.

An RD or RDA command will transmit a dualoct of read data Q a time t_{CAC} later. This time includes one cycle of round-trip propagation delay on the Channel. A static, programmed delay t_{RDLY} (equal to 0, 1, or 2 t_{CYCLE}, depending upon the number of devices on the Channel) is added to t_{CAC} to give the total RD-to-Q delay. See Figure 30 for more information.

A WR or WRA command will receive a dualoct of write data D a time t_{CWD} later. This time does not include the round-trip propagation time of the Channel since the COLC and D packets are traveling in the same direction.

When a Q packet follows a D packet (shown on the left side of the figure), a gap will appear on the DQA / DQB pins that is equal or greater than the round-trip delay. The round-trip delay will be 1, 2, or 3 cycles, depending upon the number of devices on the Channel. Because the t_{CWD} value is less than the $t_{CAC}+t_{RDLY}$ value, this will be automatically satisfied. When a WR is immediately followed by a RD on the COL pins, a gap of $t_{CAC}+t_{RDLY}-t_{CWD}$ will appear between the D packet and the Q packet.

When a D packet follows a Q packet (shown on the right side of the figure), no gap on the DQA / DQB pins is needed. Because the t_{CWD} value is less than the $t_{CAC}+t_{RDLY}$ value, a gap of $t_{CAC}+t_{RDLY}-t_{CWD}$ or greater must be inserted between the RD command and the WR command on the COL pins.

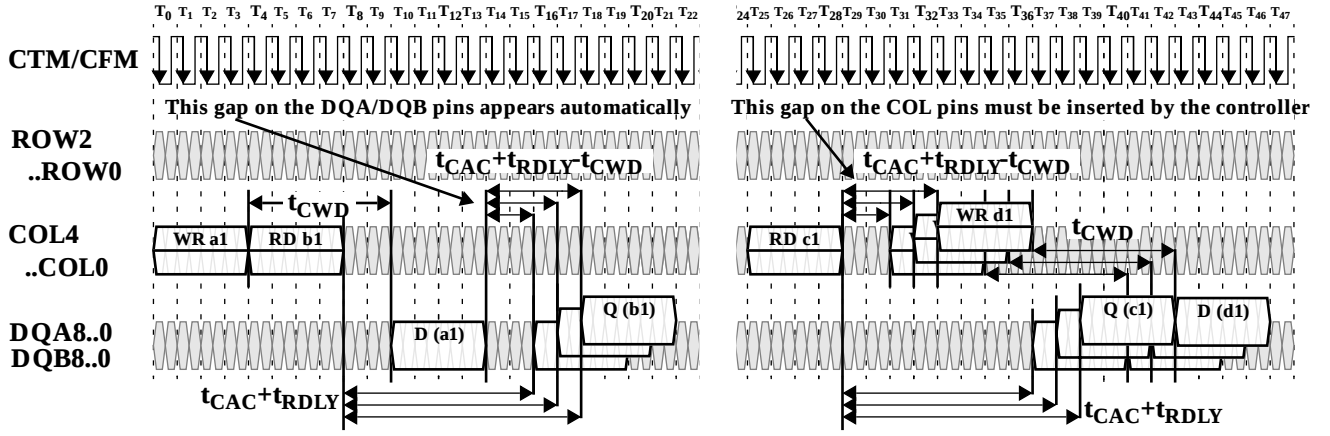

Figure 5: Read (Q) and Write (D) Data Packet - Timing for t_{RDLY} = 0,1, or 2 t_{CYCLE}

COLM Packet to D Packet Mapping

Figure 6 shows a write operation initiated by a WR command in a COLC packet. If a subset of the 16 bytes of write data are to be written, then a COLM packet is transmitted on the COL pins a time t_{RTR} after the COLC packet containing the WR command. The M bit of the COLM packet is set to indicate that it contains the MA and MB mask fields. Note that this COLM packet is aligned with the COLC packet which causes the write buffer to be retired. See Figure 18 for more details.

If all 16 bytes of the D data packet are to be written, then no further control information is required. The packet slot that would have been used by the COLM packet (t_{RTR} after the COLC packet) is available to be used as an COLX packet. This could be used for a PREX precharge command or for a housekeeping command (this case is not shown). The M bit is not asserted in an COLX packet and causes all 16 bytes of the previous WR to be written unconditionally. Note that a RD command will never need a COLM packet, and will always be able to use the COLX packet option.

The figure also shows the mapping between the MA and MB fields of the COLM packet and bytes of the D packet on the DQA and DQB pins. Each mask bit controls whether a byte of data is written (=1) or not written (=0).

Netlist EX2025
Samsung v Netlist
IPR2023-00455

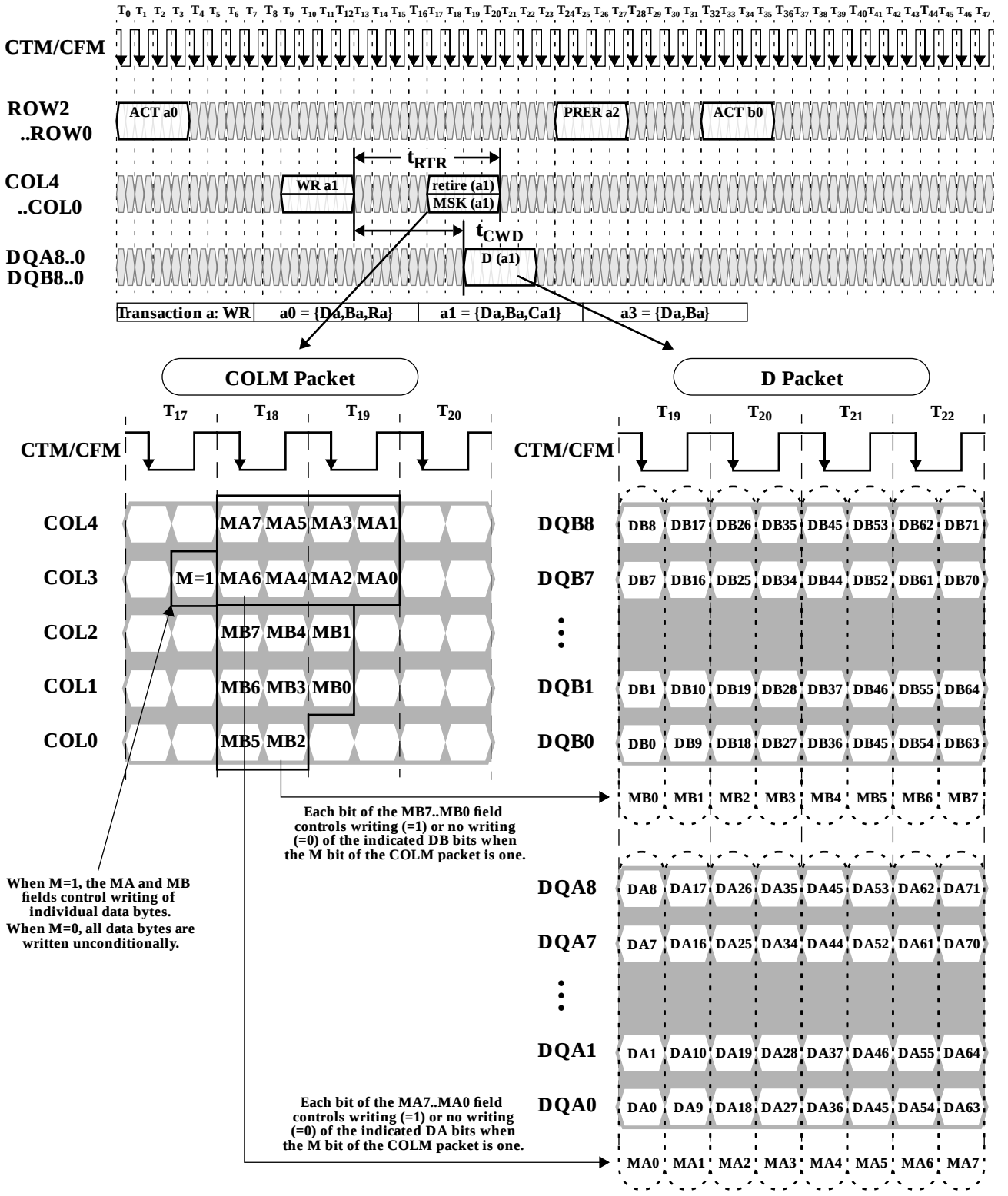

Figure 6: Mapping Between COLM Packet and D Packet for WR Command

Netlist EX2025
Samsung v Netlist
IPR2023-00455

ROW-to-ROW Packet Interaction

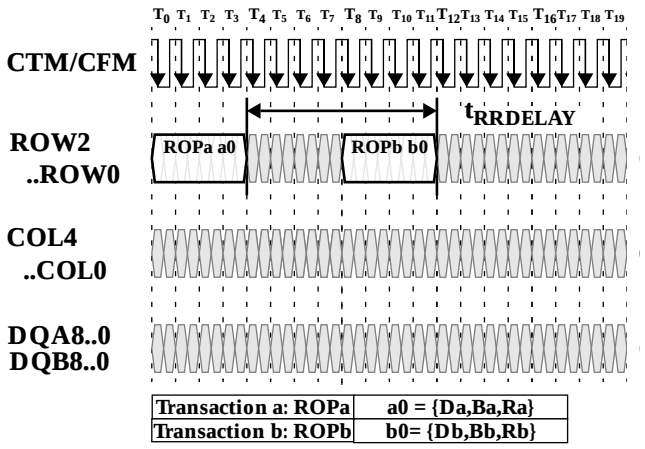

Figure 7: ROW-to-ROW Packet Interaction- Timing

Figure 7 shows two arbitrary packets on the ROW pins separated by an interval $t_{RRDELAY}$ that depends upon the command and addresses in the packets. No other ROW packets are sent to banks {Ba,Ba+1,Ba-1} between packet “a” and packet “b” unless noted otherwise. Table 8 summarizes the $t_{RRDELAY}$ values for all possible cases.

Cases RR1 through RR4 show two successive ACT commands. Figure 11 shows an example of these cases. In case RR1, there is essentially no restriction since the ACT commands are to different devices. In case RR2, the t_{RR} restriction applies to the same device with non-adjacent banks (which do not share sense amps). Cases RR3 and RR4 are illegal since bank Ba needs to be precharged. If a PRER Ba is inserted, $t_{RRDELAY}$ is t_{RC} (t_{RAS} to the PRER command, and t_{RP} to the next ACT).

Cases RR5 through RR8 show an ACT command followed by a PRER command. In cases RR5 and RR6, there are essentially no restrictions since the commands are to different devices or to non-adjacent banks of the same device. Case RR7 is illegal unless a PRER Ba command is inserted, in which case the effective $t_{RRDELAY}$ is t_{RAS}. In case RR8, the t_{RAS} restriction means the activated bank must wait before it can be precharged. Figure 11 and Figure 12 show these cases.

Cases RR9 through RR12 show a PRER command followed by an ACT command. In cases RR9 and RR10, there are essentially no restrictions since the commands are to different devices or to non-adjacent banks of the same device. In cases RR11 and RR12, the same and adjacent banks must all wait t_{RP} for the sense amp and bank to precharge before being activated. Figure 11 and Figure 13 show these cases.

Table 8: ROW-to-ROW Packet Interaction - Rules

Case #	ROPa	Da	Ba	Ra	ROPb	Db	Bb	Rb	$t_{RRDELAY}$
RR1	ACT	Da	Ba	Ra	ACT	/ = Da	xxxx	x..x	t_{PACKET}
RR2	ACT	Da	Ba	Ra	ACT	== Da	/ = {Ba,Ba+1,Ba-1}	x..x	t_{RR}
RR3	ACT	Da	Ba	Ra	ACT	== Da	== {Ba+1,Ba-1}	x..x	t_{RC} - needs PRER Ba first, however
RR4	ACT	Da	Ba	Ra	ACT	== Da	== {Ba}	x..x	t_{RC} - needs PRER Ba first, however
RR5	ACT	Da	Ba	Ra	PRER	/ = Da	xxxx	x..x	t_{PACKET}
RR6	ACT	Da	Ba	Ra	PRER	== Da	/ = {Ba,Ba+1,Ba-1}	x..x	t_{PACKET}
RR7	ACT	Da	Ba	Ra	PRER	== Da	== { Ba+1,Ba-1}	x..x	t_{RAS} - needs PRER Ba first, however
RR8	ACT	Da	Ba	Ra	PRER	== Da	== {Ba}	x..x	t_{RAS}
RR9	PRER	Da	Ba	Ra	ACT	/ = Da	xxxx	x..x	t_{PACKET}
RR10	PRER	Da	Ba	Ra	ACT	== Da	/ = {Ba,Ba+1,Ba-1}	x..x	t_{PACKET}
RR11	PRER	Da	Ba	Ra	ACT	== Da	== {Ba+1,Ba-1}	x..x	t_{RP}
RR12	PRER	Da	Ba	Ra	ACT	== Da	== {Ba}	x..x	t_{RP}
RR13	PRER	Da	Ba	Ra	PRER	/ = Da	xxxx	x..x	t_{PACKET}
RR14	PRER	Da	Ba	Ra	PRER	== Da	/ = {Ba,Ba+1,Ba-1}	x..x	t_{PP}
RR15	PRER	Da	Ba	Ra	PRER	== Da	== {Ba+1,Ba-1}	x..x	t_{PP}
RR16	PRER	Da	Ba	Ra	PRER	== Da	== Ba	x..x	t_{PP}

Netlist EX2025
Samsung v Netlist
IPR2023-00455

ROW-to-ROW Interaction - continued

Cases RR13 through RR16 summarize the combinations of two successive PRER commands. In case RR13 there is no restriction since two devices are addressed. In RR14, t_{PP} applies, since the same device is addressed. In RR15 and RR16, the same bank or an adjacent bank may be given repeated PRER commands with only the t_{PP} restriction. Figure 13 shows RR13 and RR14.

A ROW packet may contain commands other than ACT or PRER. The REFA and REFP commands are equivalent to ACT and PRER for interaction analysis purposes. The interaction rules of the NAPR, NAPRC, PDNR, and RLXR commands are discussed in a later section.

ROW-to-COL Packet Interaction

Figure 8 shows two arbitrary packets on the ROW and COL pins. They must be separated by an interval $t_{RCDELAY}$ which depends upon the command and address values in the packets. Table 9 summarizes the $t_{RCDELAY}$ values for all possible cases. Note that if the COL packet is earlier than the ROW packet, it is considered a COL-to-ROW packet interaction.

Cases RC1 through RC5 summarize the rules when the ROW packet has an ACT command. Figure 16 and Figure 17 show examples of RC5 - an activation followed by a read or write. RC4 is an illegal situation, since a read or write of a precharged banks is being attempted (remember that for a bank to be activated, adjacent banks must be precharged). In cases RC1, RC2, and RC3, there is no interaction of the ROW and COL packets.

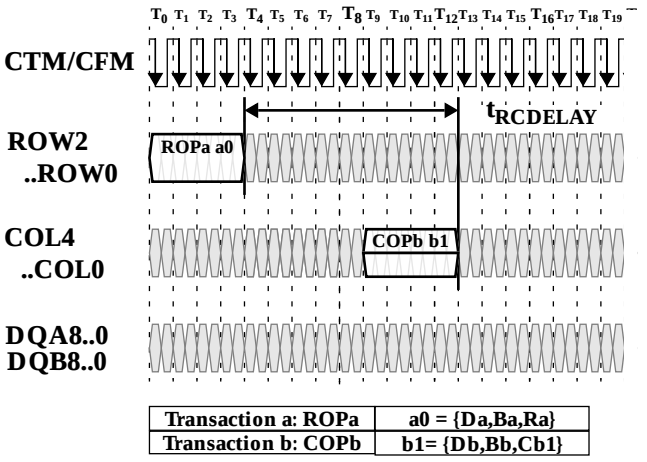

Figure 8: ROW-to-COL Packet Interaction- Timing

Cases RC6 through RC8 summarize the rules when the ROW packet has a PRER command. There is either no interaction (RC6 through RC9) or an illegal situation with a read or write of a precharged bank (RC9).

The COL pins can also schedule a precharge operation with a RDA, WRA, or PREC command in a COLC packet or a PREX command in a COLX packet. The constraints of these precharge operations may be converted to equivalent PRER command constraints using the rules summarized in Figure 15.

Table 9: ROW-to-COL Packet Interaction - Rules

Case #	ROPa	Da	Ba	Ra	COPb	Db	Bb	Cb1	$t_{RCDELAY}$
RC1	ACT	Da	Ba	Ra	NOCOP,RD,WR	/ = Da	xxxx	x..x	0
RC2	ACT	Da	Ba	Ra	NOCOP	== Da	xxxx	x..x	0
RC3	ACT	Da	Ba	Ra	RD,WR	== Da	/ = {Ba,Ba+1,Ba-1}	x..x	0
RC4	ACT	Da	Ba	Ra	RD,WR	== Da	== {Ba+1,Ba-1}	x..x	Illegal
RC5	ACT	Da	Ba	Ra	RD,WR	== Da	== Ba	x..x	t_{RCD}
RC6	PRER	Da	Ba	Ra	NOCOP,RD,WR	/ = Da	xxxx	x..x	0
RC7	PRER	Da	Ba	Ra	NOCOP	== Da	xxxx	x..x	0
RC8	PRER	Da	Ba	Ra	RD,WR	== Da	/ = {Ba,Ba+1,Ba-1}	x..x	0
RC9	PRER	Da	Ba	Ra	RD,WR	== Da	== {Ba+1,Ba-1}	x..x	Illegal

Netlist EX2025
Samsung v Netlist
IPR2023-00455

COL-to-COL Packet Interaction

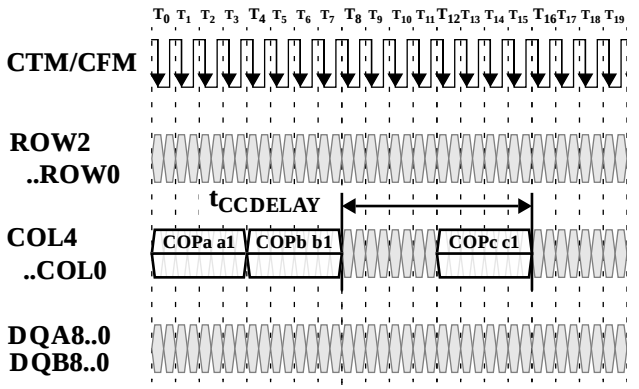

Transaction a: COPa	a1 = {Da,Ba,Ca1}
Transaction b: COPb	b1 = {Db,Bb,Cb1}
Transaction c: COPc	c1 = {Dc,Bc,Cc1}

Figure 9: COL-to-COL Packet Interaction- Timing

Figure 9 shows three arbitrary packets on the COL pins. Packets "b" and "c" must be separated by an interval $t_{CCDELAY}$ which depends upon the command and address values in all three packets. Table 10 summarizes the $t_{CCDELAY}$ values for all possible cases.

Cases CC1 through CC5 summarize the rules for every situation other than the case when COPb is a WR command and COPc is a RD command. In CC3, when a RD command is followed by a WR command, a gap of $t_{CAC}+t_{RDLY}-t_{CWD}$ must be inserted between the two COL packets. See Figure 5 for more explanation of why this gap is needed. For cases CC1, CC2, CC4, and CC5, there is no restriction ($t_{CCDELAY}$ is t_{CC}).

In cases CC6 through CC10, COPb is a WR command and COPc is a RD command. The $t_{CCDELAY}$ value needed between these two packets depends upon the command and address in the packet with COPa. In particular, in case CC6 when there is WR-WR-RD command sequence directed to the same device, a gap will be needed between the packets with COPb and COPc. The gap will need a COLC packet with a NOCOP command directed to any device in order to force an automatic retire to take place. Figure 19 (right) provides a more detailed explanation of this case.

In case CC10, there is a RD-WR-RD sequence directed to the same device. If a prior write to the same device is unretired when COPa is issued, then a gap will be needed between the packets with COPb and COPc as in case CC6. The gap will need a COLC packet with a NOCOP command directed to any device in order to force an automatic retire to take place.

Cases CC7, CC8, and CC9 have no restriction ($t_{CCDELAY}$ is t_{CC}).

For the purposes of analyzing COL-to-ROW interactions, the PREC, WRA, and RDA commands of the COLC packet are equivalent to the NOCOP, WR, and RD commands. These commands also cause a precharge operation PREC to take place. This precharge may be converted to an equivalent PRER command on the ROW pins using the rules summarized in Figure 15.

Table 10: COL-to-COL Packet Interaction - Rules

Case #	COPa	Da	Ba	Ca1	COPb	Db	Bb	Cb1	COPc	Dc	Bc	Cc1	$t_{CCDELAY}$
CC1	xxxx	xxxxx	x..x	x..x	NOCOP	Db	Bb	Cb1	xxxx	xxxxx	x..x	x..x	t_{CC}
CC2	xxxx	xxxxx	x..x	x..x	RD,WR	Db	Bb	Cb1	NOCOP	xxxxx	x..x	x..x	t_{CC}
CC3	xxxx	xxxxx	x..x	x..x	RD	Db	Bb	Cb1	WR	xxxxx	x..x	x..x	$t_{CC}+t_{CAC}+t_{RDLY}-t_{CWD}$
CC4	xxxx	xxxxx	x..x	x..x	RD	Db	Bb	Cb1	RD	xxxxx	x..x	x..x	t_{CC}
CC5	xxxx	xxxxx	x..x	x..x	WR	Db	Bb	Cb1	WR	xxxxx	x..x	x..x	t_{CC}
CC6	WR	== Db	x	x..x	WR	Db	Bb	Cb1	RD	== Db	x..x	x..x	t_{RTR}
CC7	WR	== Db	x	x..x	WR	Db	Bb	Cb1	RD	/ = Db	x..x	x..x	t_{CC}
CC8	WR	/ = Db	x	x..x	WR	Db	Bb	Cb1	RD	== Db	x..x	x..x	t_{CC}
CC9	NOCOP	== Db	x	x..x	WR	Db	Bb	Cb1	RD	== Db	x..x	x..x	t_{CC}
CC10	RD	== Db	x	x..x	WR	Db	Bb	Cb1	RD	== Db	x..x	x..x	t_{CC} or t_{RTR}[a]

a. If the write buffer was full from an earlier WR command, and had not been retired when COPa=RD is executed, $t_{CCDELAY}$ will be constrained by the t_{RTR} parameter. Otherwise, the t_{CC} parameter will apply.

Netlist EX2025
Samsung v Netlist
IPR2023-00455

COL-to-ROW Packet Interaction

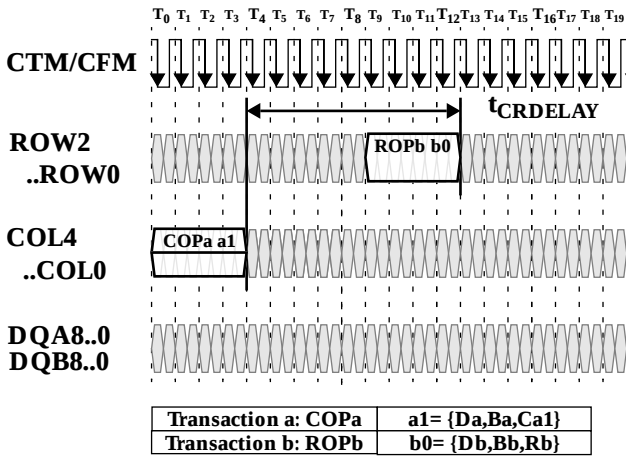

Figure 10: COL-to-ROW Packet Interaction- Timing

Figure 10 shows arbitrary packets on the COL and ROW pins. They must be separated by an interval $t_{CRDELAY}$ which depends upon the command and address values in the packets. Table 11 summarizes the $t_{CRDELAY}$ value for all possible cases.

Cases CR1, CR2, CR3, and CR9 show no interaction between the COL and ROW packets, either because one of the commands is a NOP or because the packets are directed to different devices or to non-adjacent banks.

Case CR4 is illegal because an already-activated bank is to be re-activated without being precharged Case CR5 is illegal because an adjacent bank can't be activated or precharged until bank Ba is precharged first.

In case CR6, the COLC packet contains a RD command, and the ROW packet contains a PRER command for the same bank. The t_{RDP} parameter specifies the required spacing.

Likewise, in case CR7, the COLC packet causes an automatic retire to take place, and the ROW packet contains a PRER command for the same bank. The t_{RTP} parameter specifies the required spacing.

Case CR8 is labeled "Hazardous" because a WR command should always be followed by an automatic retire before a precharge is scheduled. Figure 20 shows an example of what can happen when the retire is not able to happen before the precharge.

For the purposes of analyzing COL-to-ROW interactions, the PREC, WRA, and RDA commands of the COLC packet are equivalent to the NOCOP, WR, and RD commands. These commands also cause a precharge operation to take place. This precharge may converted to an equivalent PRER command on the ROW pins using the rules summarized in Figure 15.

A ROW packet may contain commands other than ACT or PRER. The REFA and REFP commands are equivalent to ACT and PRER for interaction analysis purposes. The interaction rules of the NAPR, PDNR, and RLXR commands are discussed in a later section.

Table 11: COL-to-ROW Packet Interaction - Rules

Case #	COPa	Da	Ba	Ca1	ROPb	Db	Bb	Rb	$t_{CRDELAY}$
CR1	NOCOP	Da	Ba	Ca1	x..x	xxxxx	xxxx	x..x	0
CR2	RD / WR	Da	Ba	Ca1	x..x	/ = Da	xxxx	x..x	0
CR3	RD / WR	Da	Ba	Ca1	x..x	== Da	/ = {Ba,Ba+1,Ba-1}	x..x	0
CR4	RD / WR	Da	Ba	Ca1	ACT	== Da	== {Ba}	x..x	Illegal
CR5	RD / WR	Da	Ba	Ca1	x..x	== Da	== {Ba+1,Ba-1}	x..x	Illegal
CR6	RD	Da	Ba	Ca1	PRER	== Da	== Ba	x..x	t_{RDP}
CR7	retire[a]	Da	Ba	Ca1	PRER	== Da	== Ba	x..x	t_{RTP}
CR8	WR	Da	Ba	Ca1	PRER	== Da	== Ba	x..x	0 [b]
CR9	xxxx	Da	Ba	Ca1	NOROP	xxxxx	xxxx	x..x	0

a. This is any command which permits the write buffer of device Da to retire (see Table 6). "Ba" is the bank address in the write buffer.
b. This situation is hazardous because the write buffer will be left unretired while the targeted bank is precharged. See Figure 20.

Netlist EX2025
Samsung v Netlist
IPR2023-00455

ROW-to-ROW Examples

Figure 11 shows examples of some of the the ROW-to-ROW packet spacings from Table 8. A complete sequence of activate and precharge commands is directed to a bank. The RR8 and RR12 rules apply to this sequence. In addition to satisfying the t_{RAS} and t_{RP} timing parameters, the separation between ACT commands to the same bank must also satisfy the t_{RC} timing parameter (RR4).

When a bank is activated, it is necessary for adjacent banks to remain precharged. As a result, the adjacent banks will also satisfy parallel timing constraints; in the example, the RR11 and RR3 rules are analogous to the RR12 and RR4 rules.

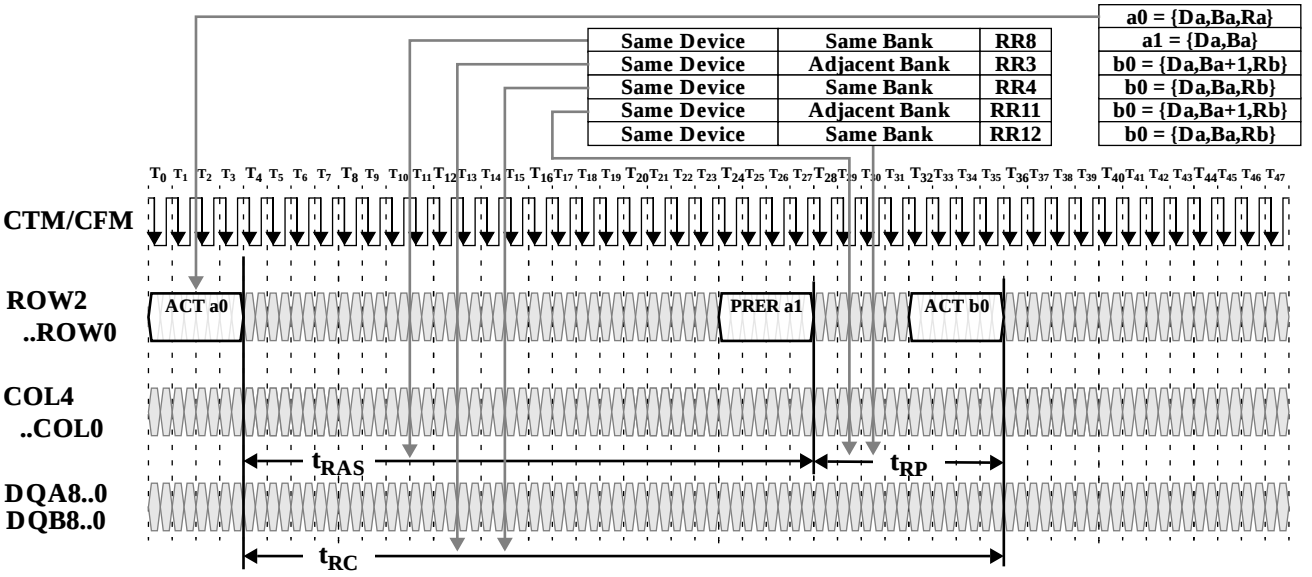

Figure 11: Row Packet Example

Figure 12 shows examples of the ACT-to-ACT (RR0, RR1) and ACT-to-PRER (RR5, RR6) command spacings from Table 8. In general, the commands in ROW packets may be spaced an interval t_{PACKET} apart unless they are directed to the same or adjacent banks or unless they are a similar command type (both PRER or both ACT) directed to the same device.

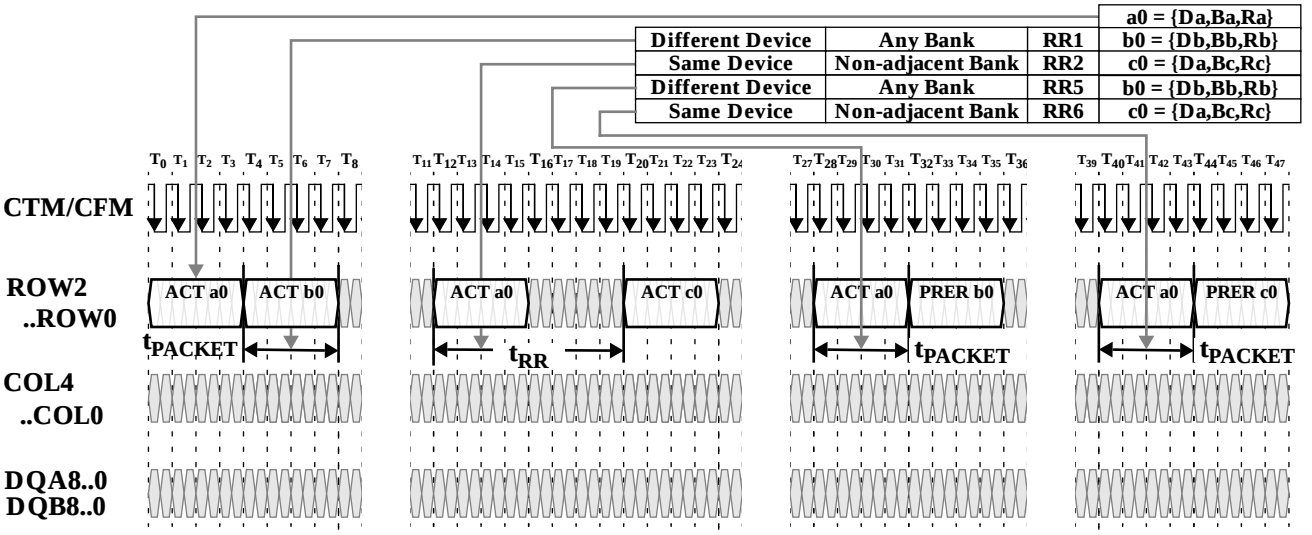

Figure 12: Row Packet Example

Netlist EX2025
Samsung v Netlist
IPR2023-00455

Figure 13 shows examples of the PRER-to-PRER (RR13, RR14) and PRER-to-ACT (RR9, RR10) command spacings from Table 8. The RR15 and RR16 cases (PRER-to-PRER to same or adjacent banks) are not shown, but are similar to RR14. In general, the commands in ROW packets may be spaced an interval t_{PACKET} apart unless they are directed to the same or adjacent banks or unless they are a similar command type (both PRER or both ACT) directed to the same device.

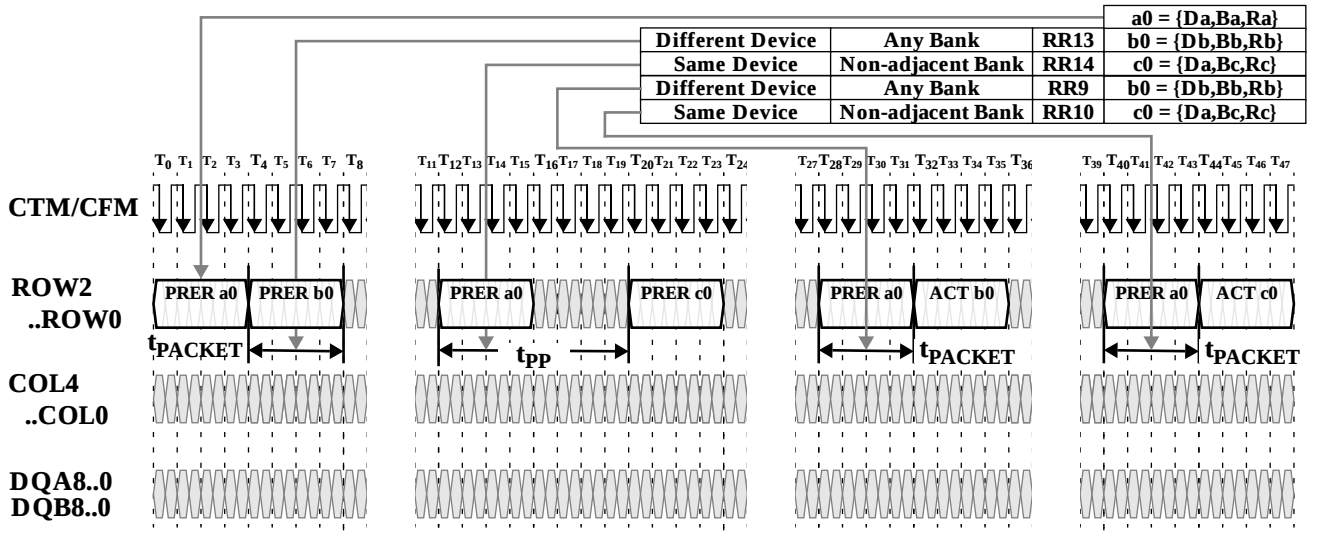

Figure 13: Row Packet Examples

Row and Column Cycle Description

Activate: A row cycle begins with the activate (ACT) operation. The activation process is destructive; the act of sensing the value of a bit in a bank's storage cell transfers the bit to the sense amp, but leaves the original bit in the storage cell with an incorrect value.

Restore: Because the activation process is destructive, a hidden operation called restore is automatically performed. The restore operation rewrites the bits in the sense amp back into the storage cells of the activated row of the bank.

Read/Write: While the restore operation takes place, the sense amp may be read (RD) and written (WR) using column operations. If new data is written into the sense amp, it is automatically forwarded to the storage cells of the bank so the data in the activated row and the data in the sense amp remain identical.

Precharge: When both the restore operation and the column operations are completed, the sense amp and bank are precharged (PRE). This leaves them in the proper state to begin another activate operation.

Intervals: The activate operation requires the interval $t_{RCD,MIN}$ to complete. The hidden restore operation requires the interval $t_{RAS,MIN}$ - $t_{RCD,MIN}$ to complete. Column read and write operations are also performed during the $t_{RAS,MIN}$ - $t_{RCD,MIN}$ interval (if more than about four column operations are performed, this interval must be increased). The precharge operation requires the interval $t_{RP,MIN}$ to complete.

Adjacent Banks: An RDRAM with a "d" designation (256Kx16dx16/18) indicates it contains "doubled banks". This means the sense amps are shared between two adjacent banks. The only exception is that sense amp 0 and sense amp 15 are not shared. When a row in a bank is activated, the two adjacent sense amps are connected to (associated with) that bank and are not available for use by the two adjacent banks. These two adjacent banks must remain precharged while the selected bank goes through its activate, restore, read/write, and precharge operations.

For example (referring to the block diagram of Figure 3), if bank 5 is accessed, sense amp 4/5 and sense amp 5/6 will both be loaded with one of the 512 rows (with 512 bytes loaded into each sense amp from the 1Kbyte row). While this row from bank 5 is being accessed, no rows may be accessed in banks 4 or 6 because of the sense amp sharing.

Netlist EX2025
Samsung v Netlist
IPR2023-00455

Precharge Mechanisms

Figure 14 shows an example of precharge with the ROWR packet mechanism. The PRER command must occur a time t_{RAS} after the ACT command, and a time t_{RP} before the next ACT command. This timing will serve as a baseline aginst which the other precharge mechanisms can be compared.

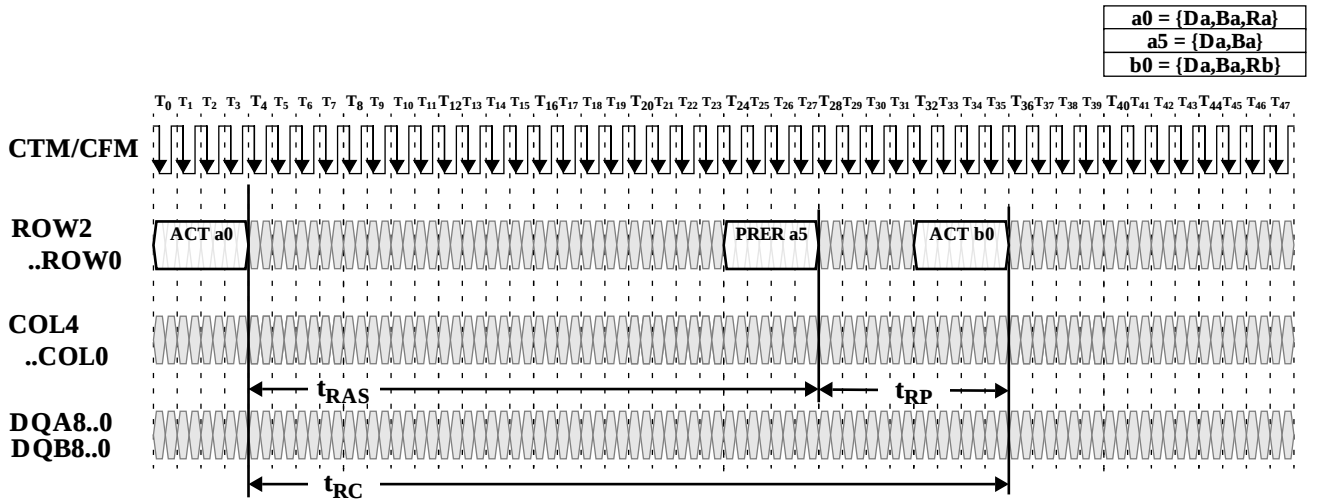

Figure 14: Precharge via PRER Command in ROWR Packet

Figure 15 (top) shows an example of precharge with a RDA command. A bank is activated with an ROWA packet on the ROW pins. Then, a series of four dualocts are read with RD commands in COLC packets on the COL pins. The fourth of these commands is a RDA, which causes the bank to automatically precharge when the final read has finished. The timing of this automatic precharge is equivalent to a PRER command in an ROWR packet on the ROW pins that is offset a time t_{OFFP} from the COLC packet with the RDA command. The RDA command should be treated as a RD command in a COLC packet as well as a simultaneous (but offset) PRER command in an ROWR packet when analyzing interactions with other packets.

Figure 15 (middle) shows an example of precharge with a WRA command. As in the RDA example, a bank is activated with an ROWA packet on the ROW pins. Then, two dualocts are written with WR commands in COLC packets on the COL pins. The second of these commands is a WRA, which causes the bank to automatically precharge when the final write has been retired. The timing of this automatic precharge is equivalent to a PRER command in an ROWR packet on the ROW pins that is offset a time t_{OFFP} from the COLC packet that causes the automatic retire. The WRA command should be treated as a WR command in a COLC packet as well as a simultaneous (but offset) PRER command in an ROWR packet when analyzing interactions with other packets. Note that the automatic retire is triggered by a COLC packet a time t_{RTR} after the COLC packet with the WR command unless the second COLC contains a RD command to the same device. This is described in more detail in Figure 18.

Figure 15 (bottom) shows an example of precharge with a PREX command in an COLX packet. A bank is activated with an ROWA packet on the ROW pins. Then, a series of four dualocts are read with RD commands in COLC packets on the COL pins. The fourth of these COLC packets includes an COLX packet with a PREC command. This causes the bank to precharge with timing equivalent to a PRER command in an ROWR packet on the ROW pins that is offset a time t_{OFFP} from the COLX packet with the PREX command.

Netlist EX2025
Samsung v Netlist
IPR2023-00455

COLC Packet: RDA Precharge Offset

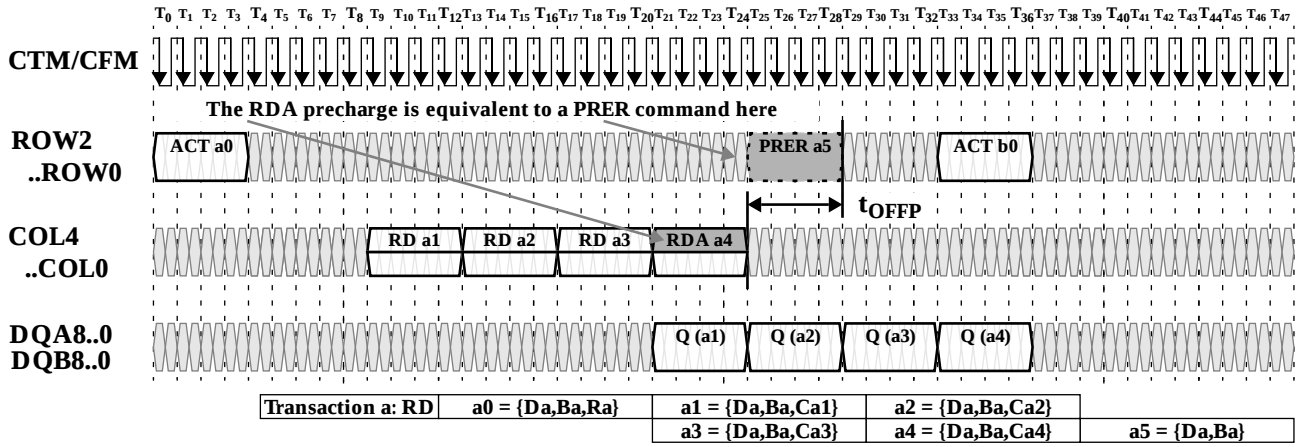

COLC Packet: WDA Precharge Offset

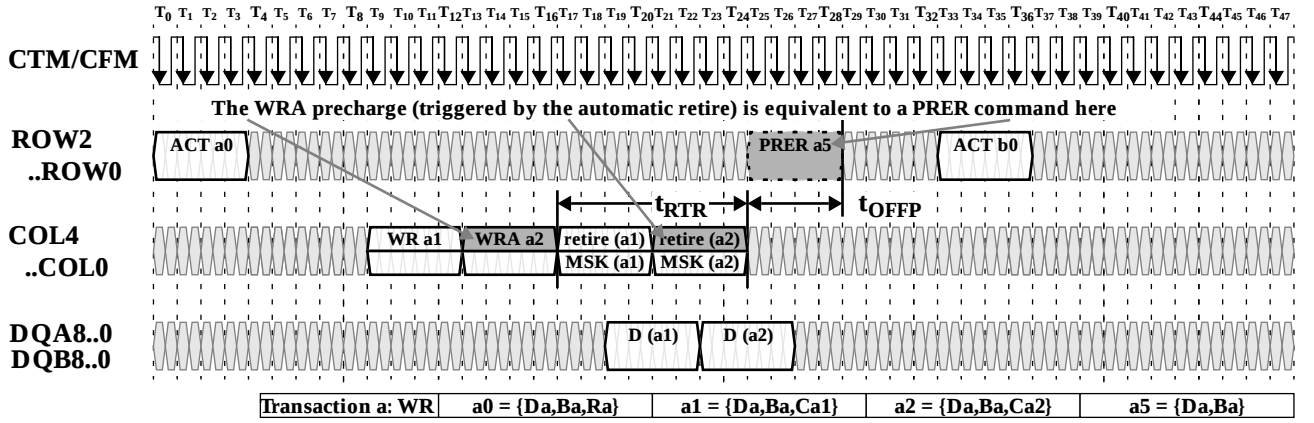

COLX Packet: PREX Precharge Offset

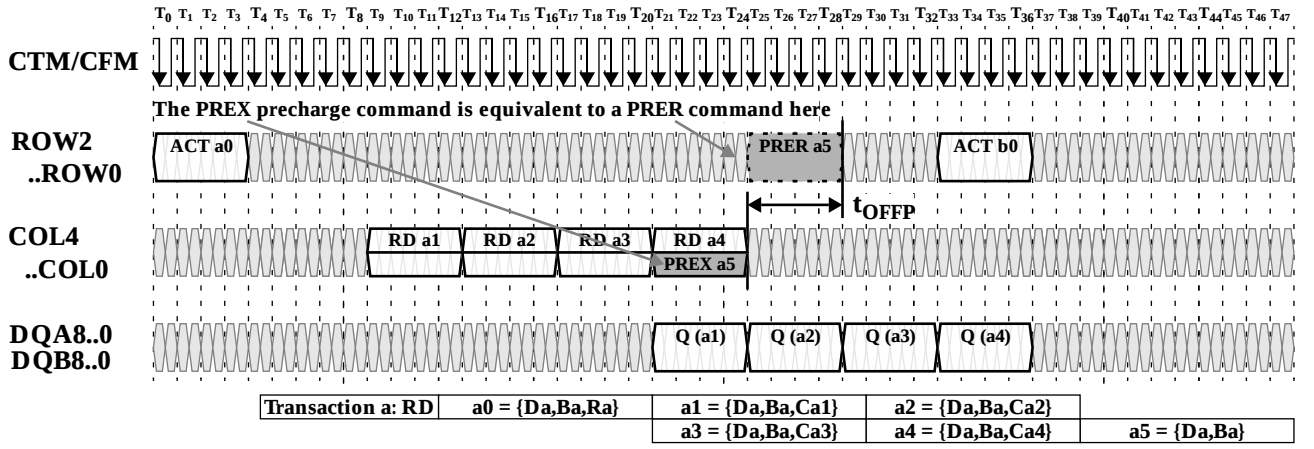

Figure 15: Offsets for Alternate Precharge Mechanisms

Netlist EX2025
Samsung v Netlist
IPR2023-00455

Read Transaction - Example

Figure 16 shows an example of a read transaction. It begins by activating a bank with an ACT a0 command in an ROWA packet. A time t_{RCD} later a RD a1 command is issued in a COLC packet. Note that the ACT command includes the device, bank, and row address (abbreviated as a0) while the RD command includes device, bank, and column address (abbreviated as a1). A time t_{CAC} after the RD command the read data dualoct Q(a1) is returned by the device (the t_{RDLY} value is assumed to be programmed to zero). Note that the packets on the ROW and COL pins use the end of the packet as a timing reference point, while the packets on the DQA / DQB pins use the beginning of the packet as a timing reference point.

A time t_{CC} after the first COLC packet on the COL pins a second is issued. It contains a RD a2 command. The a2 address has the same device and bank address as the a1 address (and a0 address), but a different column address. A time t_{CAC} after the second RD command a second read data dualoct Q(a2) is returned by the device.

Next, a PRER a3 command is issued in an ROWR packet on the ROW pins. This causes the bank to precharge so that a different row may be activated in a subsequent transaction or so that an adjacent bank may be activated. The a3 address includes the same device and bank address as the a0, a1, and a2 addresses. The PRER command must occur a time t_{RAS} or more after the original ACT command (the activation operation in any DRAM is destructive, and the contents of the selected row must be restored from the two associated sense amps of the bank during the t_{RAS} interval). The PRER command must also occur a time t_{OFFP} or more after the last RD command. Note that the t_{OFFP} value shown is greater than the $t_{OFFP,MIN}$ specification in Table 17. This transaction example reads two dualocts, but there is actually enough time to read up to four dualocts before t_{RDP} becomes the limiting parameter rather than t_{RAS}.

Finally, an ACT b0 command is issued in an ROWR packet on the ROW pins. The second ACT command must occur a time t_{RC} or more after the first ACT command and a time t_{RP} or more after the PRER command. This ensures that the bank and its associated sense amps are precharged. This example assumes that the second transaction has the same device and bank address as the first transaction, but a different row address. Transaction b may not be started until transaction a has finished. However, transactions to other banks or other devices may be issued during transaction a.

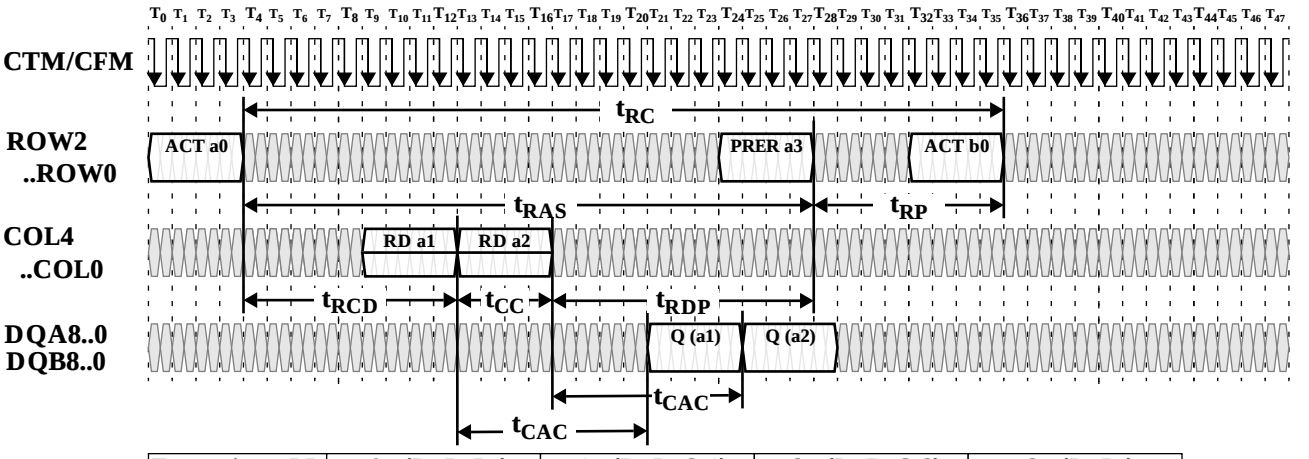

Transaction a: RD	a0 = {Da,Ba,Ra}	a1 = {Da,Ba,Ca1}	a2 = {Da,Ba,Ca2}	a3 = {Da,Ba}
Transaction b: xx	b0 = {Da,Ba,Rb}			

Figure 16: Read Transaction Example

Netlist EX2025
Samsung v Netlist
IPR2023-00455

Write Transaction - Example

Figure 17 shows an example of a write transaction. It begins by activating a bank with an ACT a0 command in an ROWA packet. A time t_{RCD} later a WR a1 command is issued in a COLC packet. Note that the ACT command includes the device, bank, and row address (abbreviated as a0) while the WR command includes device, bank, and column address (abbreviated as a1). A time t_{CWD} after the WR command the write data dualoct D(a1) is issued. Note that the packets on the ROW and COL pins use the end of the packet as a timing reference point, while the packets on the DQA / DQB pins use the beginning of the packet as a timing reference point.

A time t_{CC} after the first COLC packet on the COL pins a second COLC packet is issued. It contains a WR a2 command. The a2 address has the same device and bank address as the a1 address (and a0 address), but a different column address. A time t_{CWD} after the second WR command a second write data dualoct D(a2) is issued.

A time t_{RTR} after each WR command an optional COLM packet MSK (a1) is issued, and at the same time a COLC packet is issued causing the write buffer to automatically retire. See Figure 18 for more detail on the write / retire mechanism. If a COLM packet is not used, all data bytes are unconditionally written. If the COLC packet which causes the write buffer to retire is delayed, then the COLM packet (if used) must also be delayed.

Next, a PRER a3 command is issued in an ROWR packet on the ROW pins. This causes the bank to precharge so that a different row may be activated in a subsequent transaction or so that an adjacent bank may be activated. The a3 address includes the same device and bank address as the a0, a1, and a2 addresses. The PRER command must occur a time t_{RAS} or more after the original ACT command (the activation operation in any DRAM is destructive, and the contents of the selected row must be restored from the two associated sense amps of the bank during the t_{RAS} interval).

A PRER a3 command is issued in an ROWR packet on the ROW pins. The PRER command must occur a time t_{RTP} or more after the last COLC which causes an automatic retire.

Finally, an ACT b0 command is issued in an ROWR packet on the ROW pins. The second ACT command must occur a time t_{RC} or more after the first ACT command and a time t_{RP} or more after the PRER command. This ensures that the bank and its associated sense amps are precharged. This example assumes that the second transaction has the same device and bank address as the first transaction, but a different row address. Transaction b may not be started until transaction a has finished. However, transactions to other banks or other devices may be issued during transaction a.

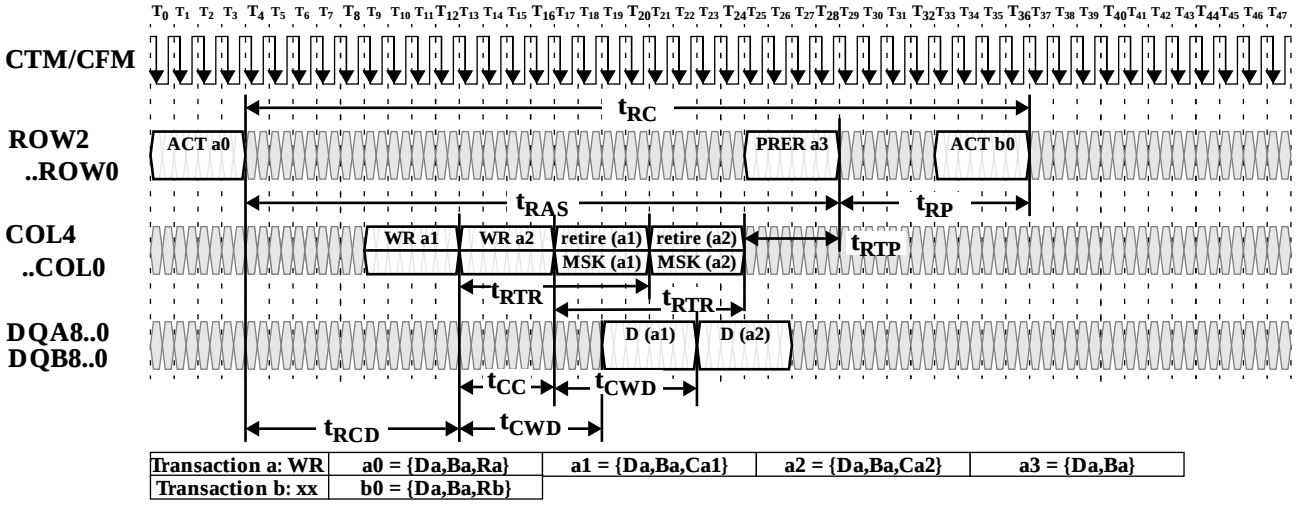

Figure 17: Write Transaction Example

Netlist EX2025
Samsung v Netlist
IPR2023-00455

Write/Retire - Examples

The process of writing a dualoct into a sense amp of an RDRAM bank occurs in two steps. The first step consists of transporting the write command, write address, and write data into the write buffer. The second step happens when of the RDRAM automatically retires the write buffer (with an optional byte-mask) into the sense amp. This two-step write process reduces the natural turn-around delay due to the internal bidirectional data pins.

Figure 18 (left) shows an example of this two step process. The first COLC packet contains the WR command and an address specifying device, bank and column. The write data dualoct follows a time t_{CWD} later. This information is loaded into the write buffer of the specified device. The COLC packet which follows a time t_{RTR} later will retire the write buffer. The retire will happen automatically unless (1) a COLC packet is not framed (no COLC packet is present and the S bit is zero), or (2) the COLC packet contains a RD command to the same device. If the retire does not take place at time t_{RTR} after the original WR command, then the device continues to frame COLC packets, looking for the first that is not a RD directed to itself. A bytemask MSK(a1) may be supplied in a COLM packet aligned with the COLC that retires the write buffer at time t_{RTR} after the WR command.

The memory controller must be aware of this two-step write / retire process. Controller performance can be improved, but only if the controller design accounts for several side effects.

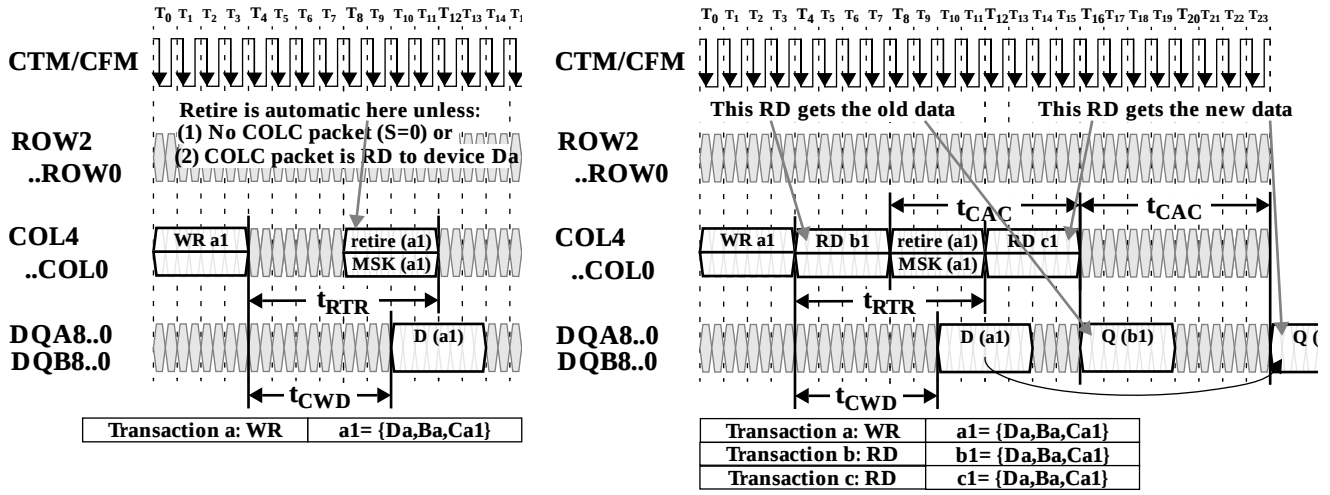

Figure 18: Normal Retire (left) and Retire/Read Ordering (right)

Figure 18 (right) shows the first of these side effects. The first COLC packet has a WR command which loads the address and data into the write buffer. The third COLC causes an automatic retire of the write buffer to the sense amp. The second and fourth COLC packets (which bracket the retire packet) contain RD commands with the same device, bank and column address as the original WR command. In other words, the same dualoct address that is written is read both before and after it is actually retired. The first RD returns the old dualoct value from the sense amp before it is overwritten. The second RD returns the new dualoct value that was just written.

Figure 19 (left) shows the result of performing a RD command to the same device in the same COLC packet slot that would normally be used for the retire operation. The read may be to any bank and column address; all that matters is that it is to the same device as the WR command. The retire operation and MSK(a1) will be delayed by a time t_{PACKET} as a result. If the RD command used the same bank and column address as the WR command, the old data from the sense amp would be returned. If many RD commands to the same device were issued instead of the single one that is shown, then the retire operation would be held off an arbitrarily long time. However, once a RD to another device or a WR or NOCOP to any device is issued, the retire will take place. Figure 19 (right) illustrates a situation in which the controller wants to issue a WR-WR-RD COLC packet sequence, with all commands addressed to the same device, but addressed to any combination of banks and columns.

Netlist EX2025
Samsung v Netlist
IPR2023-00455

Write/Retire Examples - continued

The RD will prevent a retire of the first WR from automatically happening. But the first dualoct D(a1) in the write buffer will be overwritten by the second WR dualoct D(b1) if the RD command is issued in the third COLC packet. Therefore, it is required that for this situation that the controller issue a NOCOP command in the third COLC packet, delaying the RD command by a time of t_{PACKET}. This situation is explicitly shown in Table 10 for the cases in which $t_{CCDELAY}$ is equal to t_{RTR}.

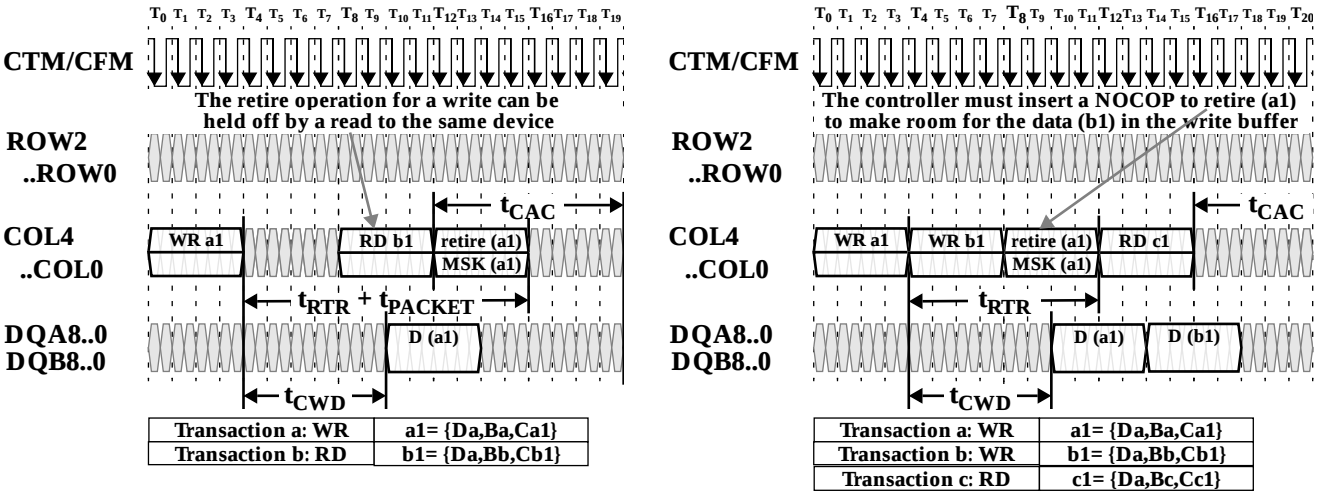

Figure 19: Retire Held Off by Read (left) and Controller Forces WWR Gap (right)

Figure 20 shows a possible result when a retire is held off for a long time (an extended version of Figure 19-left). After a WR command, a series of six RD commands are issued to the same device (but to any combination of bank and column addresses). In the meantime, the bank Ba to which the WR command was originally directed is precharged, and a different row Rc is activated. When the retire is automatically performed, it is made to this new row, since the write buffer only contains the bank and column address, not the row address. The controller can insure that this doesn't happen by never precharging a bank with an unretired write buffer. Note that in a system with more than one RDRAM, there will never be more than two RDRAMs with unretired write buffers. This is because a WR command issued to one device automatically retires the write buffers of all other devices written a time t_{RTR} before or earlier.

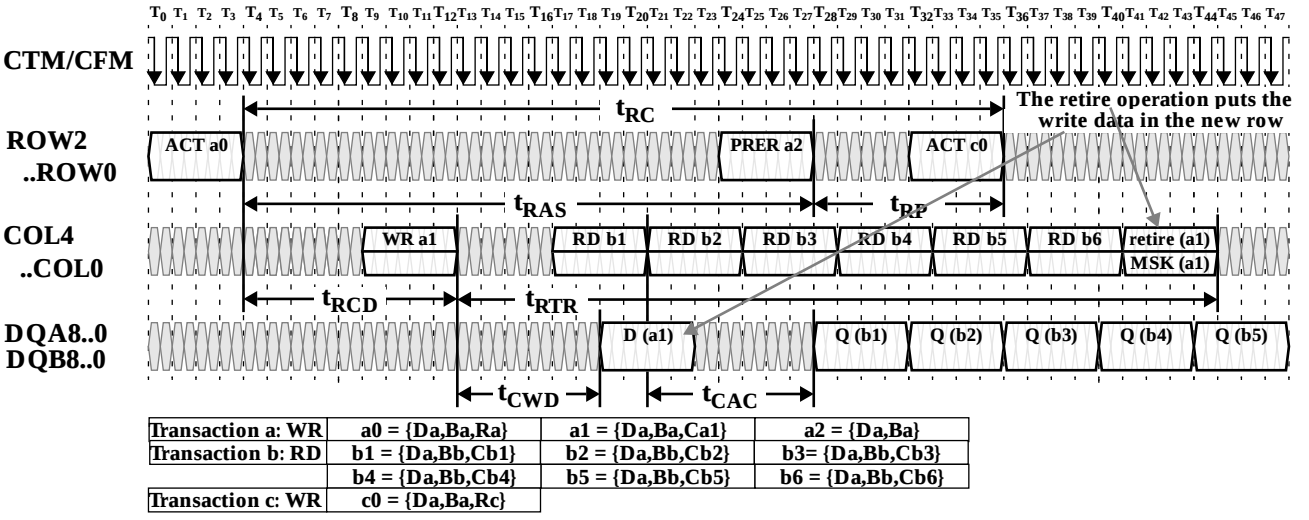

Figure 20: Retire Held Off by Reads to Same Device, Write Buffer Retired to New Row

Netlist EX2025
Samsung v Netlist
IPR2023-00455

Interleaved Write - Example

Figure 21 shows an example of an interleaved write transaction. Transactions similar to the one presented in Figure 17 are directed to non-adjacent banks of a single RDRAM. This allows a new transaction to be issued once every t_{RR} interval rather than once every t_{RC} interval (four times more often). The DQ data pin efficiency is 100% with this sequence.

With two dualocts of data written per transaction, the COL, DQA, and DQB pins are fully utilized. Banks are precharged using the WRA autoprecharge option rather than the PRER command in an ROWR packet on the ROW pins.

In this example, the first transaction is directed to device Da and bank Ba. The next three transactions are directed to the same device Da, but need to use different, non-adjacent banks Bb, Bc, Bd so there is no bank conflict. The fifth transaction could be redirected back to bank Ba without interference, since the first transaction would have completed by then (t_{RC} has elapsed). Each transaction may use any value of row address (Ra, Rb, ..) and column address (Ca1, Ca2, Cb1, Cb2, ...).

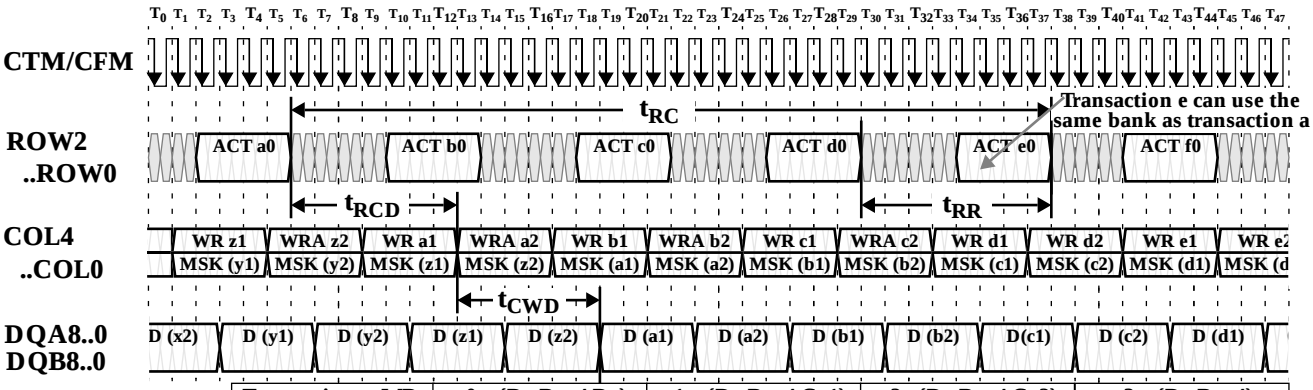

Transaction y: WR	y0 = {Da,Ba+4,Ry}	y1 = {Da,Ba+4,Cy1}	y2= {Da,Ba+4,Cy2}	y3 = {Da,Ba+4}
Transaction z: WR	z0 = {Da,Ba+6,Rz}	z1 = {Da,Ba+6,Cz1}	z2= {Da,Ba+6,Cz2}	z3 = {Da,Ba+6}
Transaction a: WR	a0 = {Da,Ba,Ra}	a1 = {Da,Ba,Ca1}	a2= {Da,Ba,Ca2}	a3 = {Da,Ba}
Transaction b: WR	b0 = {Da,Ba+2,Rb}	b1 = {Da,Ba+2,Cb1}	b2= {Da,Ba+2,Cb2}	b3 = {Da,Ba+2}
Transaction c: WR	c0 = {Da,Ba+4,Rc}	c1 = {Da,Ba+4,Cc1}	c2= {Da,Ba+4,Cc2}	c3 = {Da,Ba+4}
Transaction d: WR	d0 = {Da,Ba+6,Rd}	d1 = {Da,Ba+6,Cd1}	d2= {Da,Ba+6,Cd2}	d3 = {Da,Ba+6}
Transaction e: WR	e0 = {Da,Ba,Re}	e1 = {Da,Ba,Ce1}	e2= {Da,Ba,Ce2}	e3 = {Da,Ba}
Transaction f: WR	f0 = {Da,Ba+2,Rf}	f1 = {Da,Ba+2,Cf1}	f2= {Da,Ba+2,Cf2}	f3 = {Da,Ba+2}

Figure 21: Interleaved Write Transaction with Two Dualoct Data Length

Interleaved Read - Example

Figure 22 shows an example of interleaved read transactions. Transactions similar to the one presented in Figure 16 are directed to non-adjacent banks of a single RDRAM. The address sequence is identical to the one used in the previous write example. The DQ data pins efficiency is also 100%. The only difference with the write example (aside from the use of the RD command rather than the WR command) is the use of the PREX command in a COLX packet to precharge the banks rather than the RDA command. This is done because the PREX is available for a readtransaction but is not available for a masked write transaction.

Interleaved RRWW - Example

Figure 23 shows a steady-state sequence of 2-dualoct RD / RD / WR / WR.. transactions directed to non-adjacent banks of a single RDRAM. This is similar to the interleaved write and read examples in Figure 21 and Figure 22 except that bubble cycles need to be inserted by the controller at read / write boundaries. The DQ data pin efficiency for the example in Figure 23 is 32 / 38 or 84%. If there were more RDRAMs on the Channel, the DQ pin efficiency would approach 32 / 34 or 94% for the two-dualoct RRWW sequence (this case is not shown).

In Figure 23, the first bubble type t_{CBUB1} is inserted by the controller between a RD and WR command on the COL pins. This bubble accounts for the round-trip propagation delay that is seen by read data, and is explained in detail in Figure 5. This bubble appears on the DQA and DQB pins as t_{DBUB1} between a write data dualoct D and read data dualoct Q. This bubble also appears on the ROW pins as t_{RBUB1}.

Netlist EX2025
Samsung v Netlist
IPR2023-00455

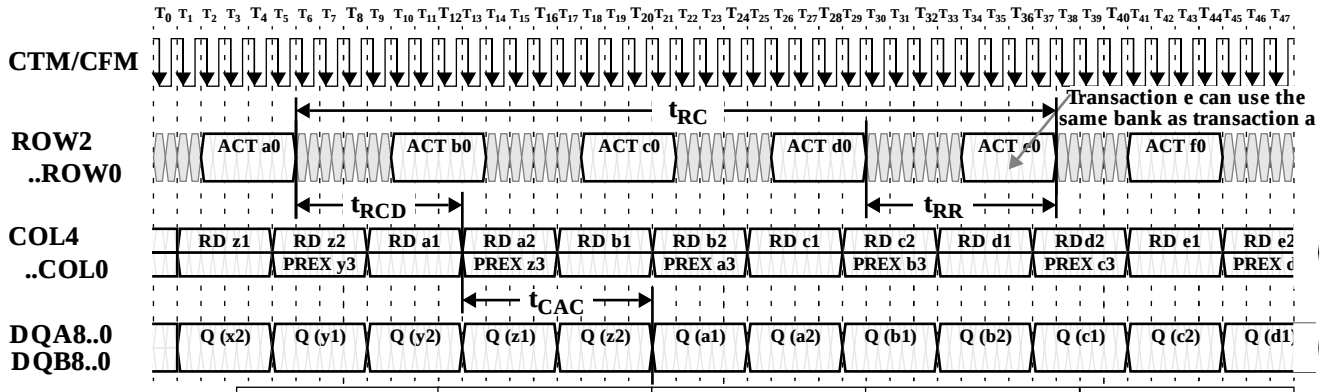

Transaction y: RD	y0 = {Da,Ba+4,Ry}	y1 = {Da,Ba+4,Cy1}	y2= {Da,Ba+4,Cy2}	y3 = {Da,Ba+4}
Transaction z: RD	z0 = {Da,Ba+6,Rz}	z1 = {Da,Ba+6,Cz1}	z2= {Da,Ba+6,Cz2}	z3 = {Da,Ba+6}
Transaction a: RD	a0 = {Da,Ba,Ra}	a1 = {Da,Ba,Ca1}	a2= {Da,Ba,Ca2}	a3 = {Da,Ba}
Transaction b: RD	b0 = {Da,Ba+2,Rb}	b1 = {Da,Ba+2,Cb1}	b2= {Da,Ba+2,Cb2}	b3 = {Da,Ba+2}
Transaction c: RD	c0 = {Da,Ba+4,Rc}	c1 = {Da,Ba+4,Cc1}	c2= {Da,Ba+4,Cc2}	c3 = {Da,Ba+4}
Transaction d: RD	d0 = {Da,Ba+6,Rd}	d1 = {Da,Ba+6,Cd1}	d2= {Da,Ba+6,Cd2}	d3 = {Da,Ba+6}
Transaction e: RD	e0 = {Da,Ba,Re}	e1 = {Da,Ba,Ce1}	e2= {Da,Ba,Ce2}	e3 = {Da,Ba}
Transaction f: RD	f0 = {Da,Ba+2,Rf}	f1 = {Da,Ba+2,Cf1}	f2= {Da,Ba+2,Cf2}	f3 = {Da,Ba+2}

Figure 22: Interleaved Read Transaction with Two Dualoct Data Length

The second bubble type t_{CBUB2} is inserted (as a NOCOP command) by the controller between a WR and RD command on the COL pins when there is a WR-WR-RD sequence to the same device. This bubble enables write data to be retired from the write buffer without being lost, and is explained in detail in Figure 19. There would be no bubble if address c0 and address d0 were directed to different devices. This bubble appears on the DQA and DQB pins as t_{DBUB2} between a write data dualoct D and read data dualoct Q. This bubble also appears on the ROW pins as t_{RBUB2}.

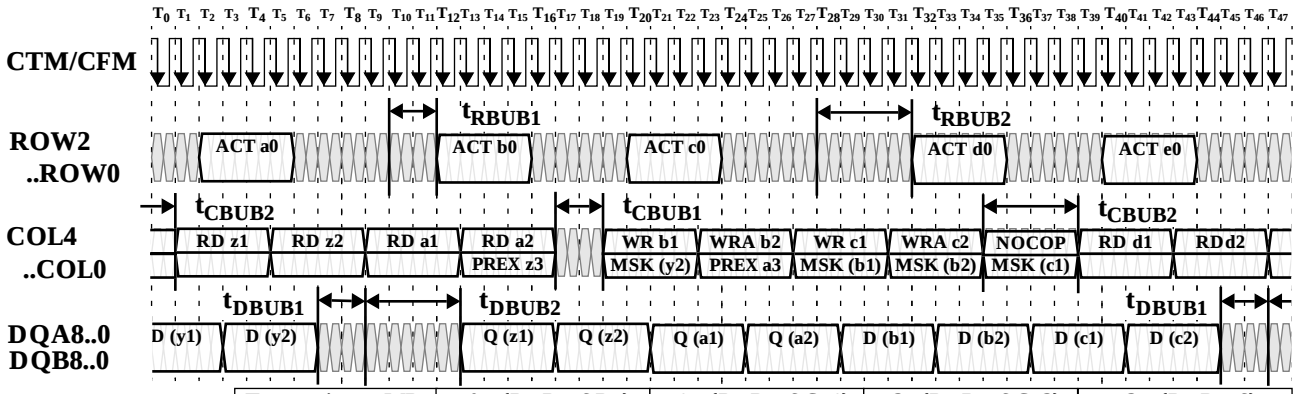

Transaction y: WR	y0 = {Da,Ba+6,Ry}	y1 = {Da,Ba+6,Cy1}	y2= {Da,Ba+6,Cy2}	y3 = {Da,Ba+6}
Transaction z: RD	z0 = {Da,Ba+8,Rz}	z1 = {Da,Ba+8,Cz1}	z2= {Da,Ba+8,Cz2}	z3 = {Da,Ba+8}
Transaction a: RD	a0 = {Da,Ba,Ra}	a1 = {Da,Ba,Ca1}	a2= {Da,Ba,Ca2}	a3 = {Da,Ba}
Transaction b: WR	b0 = {Da,Ba+2,Rb}	b1 = {Da,Ba+2,Cb1}	b2= {Da,Ba+2,Cb2}	b3 = {Da,Ba+2}
Transaction c: WR	c0 = {Da,Ba+4,Rc}	c1 = {Da,Ba+4,Cc1}	c2= {Da,Ba+4,Cc2}	c3 = {Da,Ba+4}
Transaction d: RD	d0 = {Da,Ba+6,Rd}	d1 = {Da,Ba+6,Cd1}	d2= {Da,Ba+6,Cd2}	d3 = {Da,Ba+6}
Transaction e: RD	e0 = {Da,Ba+8,Re}	e1 = {Da,Ba+8,Ce1}	e2= {Da,Ba+8,Ce2}	e3 = {Da,Ba+8}
Transaction f: WR	f0 = {Da,Ba,Rf}	f1 = {Da,Ba,Cf1}	f2= {Da,Ba,Cf2}	f3 = {Da,Ba}

Figure 23: Interleaved RRWW Sequence with Two Dualoct Data Length

Netlist EX2025
Samsung v Netlist
IPR2023-00455

Control Register Transactions

The RDRAM has two CMOS input pins SCK and CMD and two CMOS input/output pins SIO0 and SIO1. These provide serial access to a set of control registers in the RDRAM. These control registers provide configuration information to the controller during the initialization process. They also allow an application to select the appropriate operating mode of the RDRAM.

SCK (serial clock) and CMD (command) are driven by the controller to all RDRAMs in parallel. SIO0 and SIO1 are connected (in a daisy chain fashion) from one RDRAM to the next. In normal operation, the data on SIO0 is repeated on SIO1, which connects to SIO0 of the next RDRAM (the data is repeated from SIO1 to SIO0 for a read data packet). The controller connects to SIO0 of the first RDRAM.

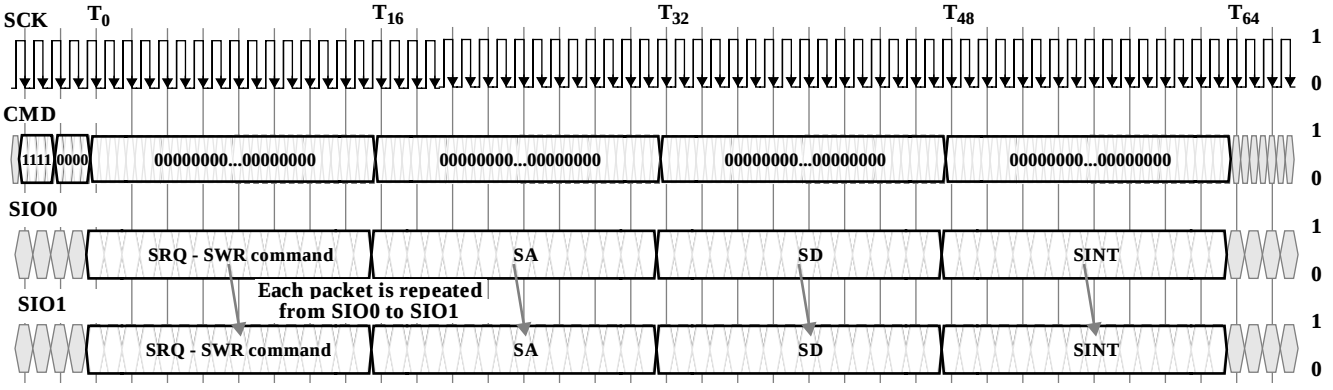

Figure 24: Serial Write (SWR) Transaction to Control Register

Write and read transactions are each composed of four packets, as shown in Figure 24 and Figure 25. Each packet consists of 16 bits, as summarized in Table 12 and Table 13. The packet bits are sampled on the falling edge of SCK. A transaction begins with a SRQ (Serial Request) packet. This packet is framed with a 11110000 pattern on the CMD input (note that the CMD bits are sampled on both the falling edge and the rising edge of SCK). The SRQ packet contains the SOP3..SOP0 (Serial Opcode) field, which selects the transaction type. The SDEV4..SDEV0 (Serial Device address) selects one of the 32 RDRAMs. If SBC (Serial Broadcast) is set, then all RDRAMs are selected. The SA (Serial Address) packet contains a 12 bit address for selecting a control register.

A write transaction has a SD (Serial Data) packet next. This contains 16 bits of data that is written into the selected control register. A SINT (Serial Interval) packet is last, providing some delay for any side-effects to take place. A read transaction has a SINT packet, then a SD packet. This provides delay for the selected RDRAM to access the control register. The SD read data packet travels in the opposite direction (towards the controller) from the other packet types. The SCK cycle time will accomodate the total delay.

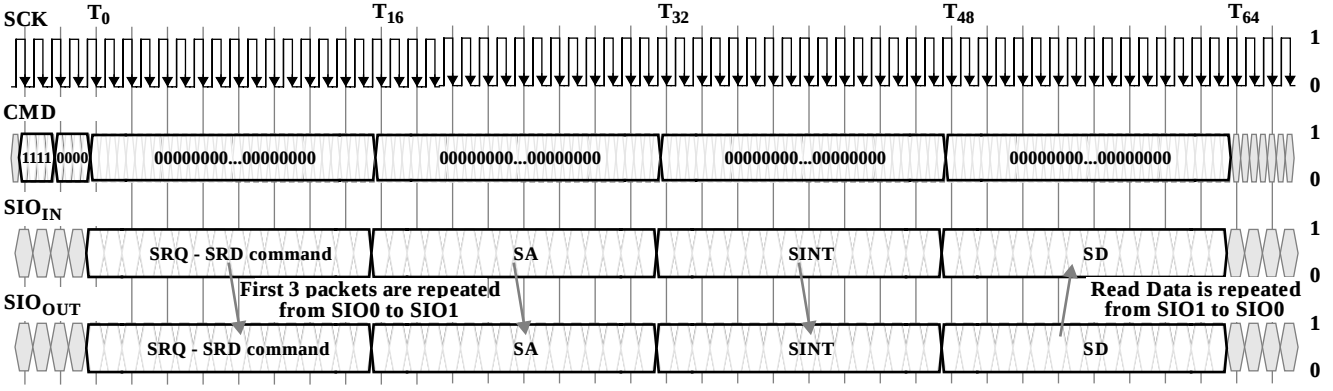

Figure 25: Serial Read (SRD) Transaction Control Register

Netlist EX2025
Samsung v Netlist
IPR2023-00455

Control Register Packets

Table 12 summarizes the formats of the four packet types for control register transactions. Table 13 summarizes the fields that are used within the packets.

Figure 26 shows the transaction format for the SETR, CLRR, and SETF commands. These transactions consist of a single SRQ packet, rather than four packets like the SWR and SRD commands. The same framing sequence on the CMD input is used, however. These commands are used during initialization prior to any control register read or write transactions.

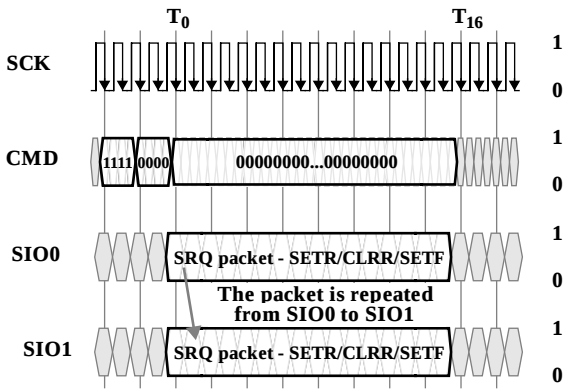

Figure 26: SETR, CLRR,SETF Transaction

Table 12: Control Register Packet Formats

SCK Cycle	SIO0 or SIO1 for SRQ	SIO0 or SIO1 for SA	SIO0 or SIO1 for SINT	SIO0 or SIO1 for SD	SCK Cycle	SIO0 or SIO1 for SRQ	SIO0 or SIO1 for SA	SIO0 or SIO1 for SINT	SIO0 or SIO1 for SD
0	rsrv	rsrv	0	SD15	8	SOP1	SA7	0	SD7
1	rsrv	rsrv	0	SD14	9	SOP0	SA6	0	SD6
2	rsrv	rsrv	0	SD13	10	SBC	SA5	0	SD5
3	rsrv	rsrv	0	SD12	11	SDEV4	SA4	0	SD4
4	rsrv	SA11	0	SD11	12	SDEV3	SA3	0	SD3
5	rsrv	SA10	0	SD10	13	SDEV2	SA2	0	SD2
6	SOP3	SA9	0	SD9	14	SDEV1	SA1	0	SD1
7	SOP2	SA8	0	SD8	15	SDEV0	SA0	0	SD0

Table 13: Field Description for Control Register Packets

Field	Description
rsrv	Reserved. Should be driven as “0” by controller.
SOP3..SOP0	Serial opcode. Specifies command for control register transaction. Encodings not listed below are reserved.
	0000 - SRD. Serial read of control register {SA11..SA0} of RDRAM {SDEV4..SDEV0}.
	0001 - SWR. Serial write of control register {SA11..SA0} of RDRAM {SDEV4..SDEV0}.
	0010 - SETR. Set Reset bit, all control registers assume their reset values.
	0011 - CLRR. Clear Reset bit, all control registers retain their reset values.
	0100 - SETF. Set fast (normal) clock mode.
	0110 - TCEN. Temperature Calibrate Enable
	0111 - TCAL.Temperature Calibrate.
SDEV4..SDEV0	Serial device. Compared to SDEVID4..SDEVID0 field of INIT control register field to select the RDRAM to which the transaction is directed.
SBC	Serial broadcast. When set, RDRAMs ignore {SDEV4..SDEV0} for RDRAM selection.
SA11..SA0	Serial address. Selects which control register of the selected RDRAM is read or written.
SD15..SD0	Serial data. The 16 bits of data written to or read from the selected control register of the selected RDRAM.

Netlist EX2025
Samsung v Netlist
IPR2023-00455

Initialization

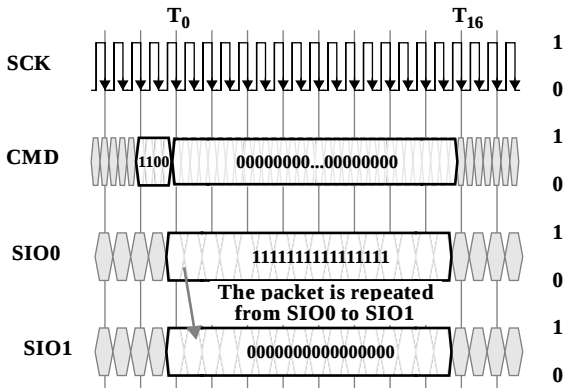

Figure 27: SIO Pin Initialization

Initialization refers to the process that a controller must go through after power is applied to the system or the system is reset. The controller prepares the RDRAM sub-system for normal Channel operation by using a sequence of control register transactions on the serial CMOS pins.

The first step in this sequence is to assign unique serial device addresses to all the RDRAMs. This is done with Algorithm InitDev, shown in the opposite column. The controller assumes that there are no more that "N" RDRAMs on the Channel (the Channel maximum is 32, but some applications may have a lower limit).

First, the SIO0 and SIO1 pin directionality is established with the sequence in step 1. The controller then resets all RDRAMs, using broadcast SETR and CLRR commands (steps 2,3,4) with a delay in between. In step 5, a SETF command establishes the normal clock frequency. See Figure 26 for the format of SETR, CLRR, and SETF transactions. In step 6 the SIO0-to-SIO1 link is broken in all RDRAMs, so the controller is only talking to the first RDRAM. Also, the SDEVID field is set to its maximum value. Next, the loop index INDX is initialized (step 7). In step 8, the SDEVID field is loaded with the INDX value, and the SRP bit is set so the next RDRAM becomes accessible. In step 9, the INDX value is incremented, and in step 10, steps 8 and 9 are repeated for the remaining RDRAMs.

Finally, it will be necessary for the controller to force a 200µs pause interval to allow the RDRAM core timing circuits to stabilize. All banks of all RDRAMs must also be accessed twice. An access is an activate (ACT) and a precharge (PRE) command. This may be accomplished with the refresh commands.

At this point, Algorithm A is complete and all RDRAMs have a unique device address SDEVID4..0 for control register transactions. Note that the SDEVID address value of an RDRAM indicates its position in the daisy-chained CMOS serial pins. This will not necessarily be the same value as the DEVID register which is used for memory transactions. The next steps taken by the controller will vary depending upon the application, so only a rough outline can be given here.

In essence, the controller must read all the read-only configuration registers of all RDRAMs, it must process this information, and then it must write all the read-write registers to place the RDRAMs into the proper operating mode. The most important of these read-write registers are DEVID (the device address for memory transactions) and TRDLY (which sets the delay value for memory read data).

==========

Algorithm InitDev: Assign SDEVID Device Addresses

1. Issue SIO Pin Initialization sequence (see Figure 27).
2. Issue one SETR transaction:
   - SOP3..SOP0 = 0010 (SETR command)
   - SBC = 1 (Broadcast)
   - SDEV4..SDEV0 = 00000 (don't care).
3. Wait 16 SCK cycles.
4. Issue one CLRR transaction:
   - SOP3..SOP0 = 0011 (CLRR command)
   - SBC = 1 (Broadcast)
   - SDEV4..SDEV0 = 00000 (don't care).
5. Issue one SETF transaction:
   - SOP3..SOP0 = 0100 (SETF command)
   - SBC = 1 (Broadcast)
   - SDEV4..SDEV0 = 00000 (don't care).
6. Issue one register write transaction:
   - SOP3..SOP0 = 0001 (SWR command)
   - SBC = 1 (broadcast)
   - SDEV4..SDEV0 = 00000 (don't care).
   - SA11..SA0 = 021_{16} (INIT control register).
   - SD15..SD0 = $001f_{16}$ (SRP<=0, SDEVID<=1f).
7. Set INDX4..INDX0 to 00000_2. INDX is a counter in the Controller which acts as a loop index.
8. Issue one register write transaction (SRP<=1, SDEVID<=INDX):
   - SOP3..SOP0 = 0001 (SWR command)
   - SBC = 0 (non-broadcast)
   - SDEV4..SDEV0 = 11111.
   - SA11..SA0 = 021_{16} (INIT control register).
   - SD15..SD0 = {0000000100_2, INDX4..INDX0}.
9. Increment INDX4..INDX0.
10. Repeat Steps (8) and (9) an additional (N-1) times.
11. 200µs pause and access all banks twice.

==========

Netlist EX2025
Samsung v Netlist
IPR2023-00455

Control Register Summary

Table 14 summarizes the RDRAM control registers. Detail is provided for each control register in Figure 28 through Figure 31. Read-only bits which are shaded gray are unused and return zero. Read-write bits which are shaded gray are reserved and should always be written with zero. The RIMM SPD Application Note (DL-0054) describes additional read-only configuration registers which are present on Direct RIMMs.

Table 14: Control Register Summary

SA11..SA0 Address	Register Name	Field Name	read-write, or read-only	Description
021_{16}	INIT	SDEVID	read-write, 5 bits	Serial device ID. Device address for control register read / write.
		PSX	read-write, 1 bit	Power select exit. PDN / NAP exit with device addr on DQA5..0.
		SRP	read-write, 1 bit	SIO repeater. Used to initialize RDRAM.
		NSR	read-write, 1 bit	NAP self-refresh. Enables self-refresh in NAP mode.
		PSR	read-write, 1 bit	PDN self-refresh. Enables self-refresh in PDN mode.
		LSR	read-write, 1 bit	Low power self-refresh. Enables low power self-refresh.
034_{16}	TEMP	TEN	read-write, 1 bits	Enables temperature sensing for thermal management.
035_{16}	CNFGA	REFBIT	read-only, 3 bit	Refresh bank bits. Used for multi-bank refresh.
		DBL	read-only, 1 bit	Double. Specifies doubled-bank architecture
		MVER	read-only, 6 bit	Manufacturer version. Manufacturer identification number.
		PVER	read-only, 6 bit	Protocol version. Specifies version of Direct protocol supported.
036_{16}	CNFGB	BYT	read-only, 1 bit	Byte. Specifies an 8-bit or 9-bit byte size.
		DEVTYP	read-only, 3 bit	Device type. Device can be RDRAM or some other device category.
		CORG	read-only, 6 bit	Core organization. Bank, row, column address field sizes.
		SVER	read-only, 6 bit	Stepping version. Mask version number.
040_{16}	DEVID	DEVID	read-write, 5 bits	Device ID. Device address for memory read / write.
041_{16}	REFB	REFB	read-write, 4 bits	Refresh bank. Next bank to be refreshed by self-refresh.
042_{16}	REFR	REFR	read-write, 9 bits	Refresh row. Next row to be refreshed by REFA, self-refresh.
043_{16}	CCA	CCA	read-write, 7 bits	Current control A. Controls I_{OL} output current for DQA.
		ASYMA	read-write, 2 bits	Asymmetry control. Controls asymmetry of V_{OL} / V_{OH} swing for DQA.
044_{16}	CCB	CCB	read-write, 7 bits	Current control B. Controls I_{OL} output current for DQB.
		ASYMB	read-write, 2 bits	Asymmetry control. Controls asymmetry of V_{OL} / V_{OH} swing for DQB.
045_{16}	NAPX	NAPXA	read-write, 5 bits	NAP exit. Specifies length of NAP exit phase A.
		NAPXB	read-write, 5 bits	NAP exit. Specifies length of NAP exit phase B.
		DQS	read-write, 1 bits	DQ select. Selects CMD framing for NAP / PDN exit.
046_{16}	PDNXA	PDNXA	read-write, 13 bits	PDN exit. Specifies length of PDN exit phase A.
047_{16}	PDNXB	PDNXB	read-write, 13 bits	PDN exit. Specifies length of PDN exit phase B.
048_{16}	TPARM	TCAS	read-write, 2 bits	t_{CAS} core parameter. Determines t_{OFFP} datasheet parameter.
		TCLS	read-write, 2 bits	t_{CLS} core parameter. Determines t_{CAC} and t_{OFFP} datasheet parameters.
		TDAC	read-write, 2 bits	t_{DAC} core parameter. Determines t_{CAC} and t_{OFFP} datasheet parameters.
049_{16}	TFRM	TFRM	read-write, 4 bits	t_{FRM} core parameter. Determines ROW to COL packet framing interval.
$04a_{16}$	TRDLY	TRDLY	read-write, 2 bits	t_{RDLY} datasheet parameter. Programmable delay for read data.
$04c_{16}$	TCYCLE	TCYCLE	read-write, 14 bits	t_{CYCLE} datasheet parameter. Specifies cycle time in 64ps units.
$04b_{16}$ $04d_{16}$ $04e_{16}$ $04f_{16}$	TEST75 TEST77 TEST78 TEST79	TEST75 TEST77 TEST78 TEST79	read-write, 16 bits read-write, 16 bits read-write, 16 bits read-write, 16 bits	Test register. Write with zero. Test register. Write with zero. Test register. Write with zero. Test register. Write with zero.

Netlist EX2025
Samsung v Netlist
IPR2023-00455

Control Register: INIT — **Address: 021_{16}**

Read / write register.
Reset values are undefined except as noted below

15	14	13	12	11	10	9	8	7	6	5	4	3	2	1	0
0	0	0	0	0	LSR	PSR	NSR	SRP	PSX	0	SDEVID4..SDEVID0				

SDEVID4..0 - Serial Device Identification. Compared to SDEV4..0 serial address field of serial request packet for register read / write transactions. This determines which RDRAM is selected for the register read or write operation. **SDEVID resets to $1f_{16}$.**

PSX - Power Exit Select. PDN and NAP are exited with (=0) or without (=1) a device address on the DQA5..0 pins.

SRP - SIO Repeater. Controls value on SIO1;
SIO1=SIO0 if SRP=1, SIO1=0 if SRP=0. **SRP resets to 1.**

NAP Self-Refresh. NSR=1 enables self-refresh in NAP mode.

PDN Self-Refresh. PSR=1 enables self-refresh in PDN mode.

Low Power Self-Refresh. LSR=1 enables longer self-refresh interval. The self-refresh supply current is reduced by 3x.

Control Register: TEMP — **Address: 034_{16}**

15	14	13	12	11	10	9	8	7	6	5	4	3	2	1	0
0	0	0	0	0	0	0	TEN	0	0	0	0	0	0	0	0

Read / write register.
Reset value is undefined.
Temperature sensing enable register.
When TEN is set, the temperature sensing circuitry is enabled. More detail will be supplied in a later version of this document.

Control Register: DEVID — **Address: 040_{16}**

15	14	13	12	11	10	9	8	7	6	5	4	3	2	1	0
0	0	0	0	0	0	0	0	0	0	0	DEVID4..DEVID0				

Read / write register.
Reset value is undefined.
Device Identification register.
DEVID4..DEVID0 is compared to DR4..DR0, DC4..DC0, and DX4..DX0 fields for all memory read or write transactions. This determines which RDRAM is selected for the memory read or write transaction.

Control Register: REFB — **Address: 041_{16}**

15	14	13	12	11	10	9	8	7	6	5	4	3	2	1	0
0	0	0	0	0	0	0	0	0	0	0	0	REFB3..REFB0			

Read / write register.
Reset value is undefined.
Refresh Bank register.
REFB3..REFB0 is the bank that will be refreshed next during self-refresh. REFB3..0 is incremented after each self-refresh activate and precharge operation pair.

Control Register: REFR — **Address: 042_{16}**

15	14	13	12	11	10	9	8	7	6	5	4	3	2	1	0
0	0	0	0	0	0	0	REFR8..REFR0								

Read / write register.
Reset value is undefined.
Refresh Row register.
REFR8..REFR0 is the row that will be refreshed next by the REFP command or by self-refresh. REFR8..0 is incremented when BR3..0=1111 for the REFP command. REFR8..0 is incremented when REFB3..0=1111 for self-refresh.

Figure 28: Control Registers

Netlist EX2025
Samsung v Netlist
IPR2023-00455

Control Register: CCA **Address: 043_{16}**

15	14	13	12	11	10	9	8	7	6	5	4	3	2	1	0
0	0	0	0	0	0	0	ASYMA 1..0		CCA6..CCA0						

Read / write register.
Reset value is undefined.
CCA6..CCA0 - Current Control A. Controls the I_{OL} output current for the DQA8..DQA0 pins.

ASYMB1,ASYMB0 control the asymmetry of the V_{OL} / V_{OH} voltage swing about the V_{REF} reference voltage for the DQA8..0 pins.

Control Register: CCB **Address: 044_{16}**

15	14	13	12	11	10	9	8	7	6	5	4	3	2	1	0
0	0	0	0	0	0	0	ASYMB 1..0		CCB6..CCB0						

Read / write register.
Reset value is undefined.
CCB6..CCB0 - Current Control B. Controls the I_{OL} output current for the DQB8..DQB0 pins.

ASYMB1,ASYMB0 control the asymmetry of the V_{OL} / V_{OH} voltage swing about the V_{REF} reference voltage for the DQB8..0 pins.

Control Register: NAPX **Address: 045_{16}**

15	14	13	12	11	10	9	8	7	6	5	4	3	2	1	0
0	0	0	0	0	DQS	NAPXB4..0					NAPXA4..0				

Read / write register.
Reset value is undefined

NAPXA4..0 - Nap Exit Phase A. This field specifies the number of SCK cycles during the first phase for exiting NAP mode.

NAPXB4..0 - Nap Exit Phase B. This field specifies the number of SCK cycles during the second phase for exiting NAP mode.

DQS - DQ Select. This field specifies the number of SCK cycles (0 => 0.5 cycles, 1 => 1.5 cycles) between the CMD pin framing sequence and the device selection on DQ5..0.

Control Register: PDNXA **Address: 046_{16}**

15	14	13	12	11	10	9	8	7	6	5	4	3	2	1	0
0	0	0	PDNXA12..0												

Read / write register.
Reset value is undefined
PDNXA4..0 - PDN Exit Phase A. This field specifies the number of (64•SCK cycle) units during the first phase for exiting PDN mode.

Control Register: PDNXB **Address: 047_{16}**

15	14	13	12	11	10	9	8	7	6	5	4	3	2	1	0
0	0	0	PDNXA12..0												

Read / write register.
Reset value is undefined
PDNXB4..0 - PDN Exit Phase B. This field specifies the number of (256•SCK cycle) units during the second phase for exiting PDN mode.

Figure 29: Control Registers

Netlist EX2025
Samsung v Netlist
IPR2023-00455

Control Register: TPARM **Address: 048_{16}**

15	14	13	12	11	10	9	8	7	6	5	4	3	2	1	0
0	0	0	0	0	0	0	0	0	TDAC			TCLS		TCAS	

Read / write register.
Reset value is undefined.
TCAS1..0 - Specifies the t_{CAS} core parameter in t_{CYCLE} units. This should be “10” ($2 \cdot t_{CYCLE}$).

TCLS1..0 - Specifies the t_{CLS} core parameter in t_{CYCLE} units. Should be “10” ($2 \cdot t_{CYCLE}$).

TDAC2..0 - Specifies the t_{DAC} core parameter in t_{CYCLE} units. This should be “011” ($3 \cdot t_{CYCLE}$).

The equations relating the core parameters to the datasheet parameters follow:

$t_{CAS} = 2 \cdot t_{CYCLE}$
$t_{CLS} = 2 \cdot t_{CYCLE}$
$t_{DAC} = 3 \cdot t_{CYCLE}$
$t_{CPS} = 1 \cdot t_{CYCLE}$ Not programmable

$t_{CAC} = 3 \cdot t_{CYCLE} + t_{CLS} + t_{DAC}$
$= 8 \cdot t_{CYCLE}$

$t_{OFFP} = t_{CPS} + t_{CAS} + t_{CLS} - 1 \cdot t_{CYCLE}$
$= 4 \cdot t_{CYCLE}$

$t_{RCD} = t_{RCD,CORE} + 1 \cdot t_{CYCLE} - t_{CLS}$
$= t_{RCD,CORE} - 1 \cdot t_{CYCLE}$

Control Register: TFRM **Address: 049_{16}**

15	14	13	12	11	10	9	8	7	6	5	4	3	2	1	0
0	0	0	0	0	0	0	0	0	0	0	0	TFRM3..0			

Read / write register.
Reset value is undefined.
TFRM3..0 - Specifies the value of the t_{FRM} core parameter in t_{CYCLE} units. This is the minimum offset between a ROW packet (which places a device at ATTN) and the first COL packet which must be framed. This should be written with the value “0111” ($7 \cdot t_{CYCLE}$). This should match the $t_{RCD,MIN}$ datasheet parameter.

Control Register: TRDLY **Address: $04a_{16}$**

15	14	13	12	11	10	9	8	7	6	5	4	3	2	1	0
0	0	0	0	0	0	0	0	0	0	0	0	0	0	TRDLY	

Read / write register.
Reset value is undefined.
TRDLY1..0 - Specifies the value of the tRDLY datasheet parameter in tCYCLE units. This adds a programmable delay to Q (read data) packets, permitting round trip read delay to all devices to be equalized. This field may be written with the values “00” (0•tCYCLE) through “10” (2•tCYCLE). Refer to Figure 5 for more details.

Control Register: TCYCLE **Address: $04c_{16}$**

15	14	13	12	11	10	9	8	7	6	5	4	3	2	1	0
0	0	TCYCLE13..TCYCLE0													

Read / write register.
Reset value is undefined
TCYCLE13..0 - Specifies the value of the t_{CYCLE} datasheet parameter in 64ps units. For the $t_{CYCLE,MIN}$ of 2.5ns (2500ps), this field should be written with the value “00027_{16}” (39•64ps).

Control Register: TEST75	**Address: $04b_{16}$**
Control Register: TEST77	**Address: $04d_{16}$**
Control Register: TEST78	**Address: $04e_{16}$**
Control Register: TEST79	**Address: $04f_{16}$**

15	14	13	12	11	10	9	8	7	6	5	4	3	2	1	0
0	0	0	0	0	0	0	0	0	0	0	0	0	0	0	0

Read / write registers.
Reset value is undefined
These registers are used for testing purposes. They should be written with zeros.

Figure 30: Control Registers

Netlist EX2025
Samsung v Netlist
IPR2023-00455

Control Register: CNFGA **Address: 035_{16}**

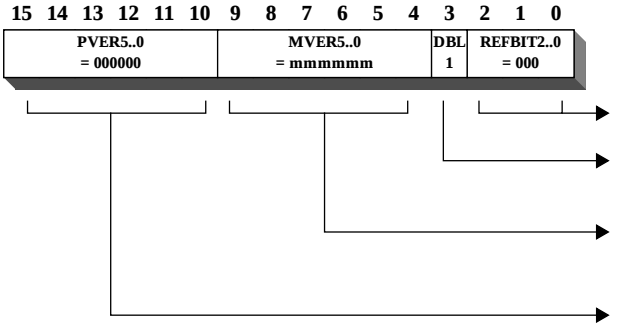

Read-only register.

REFBIT2..0 - Refresh Bank Bits. Specifies the number of high order bank address bits to be ignored during REFA and REFP commands. Permits multi-bank refresh in future RDRAMs.

DBL - Doubled-Bank. DBL=1 means the device uses a doubled-bank architecture with adjacent-bank dependency. DBL=0 means no dependency.

MVER5..0 - Protocol Version. Specifies the Direct Protocol version used by this device.

PVER5..0 - Manufacturer Version. Specifies the manufacturer identification number.

Control Register: CNFGB **Address: 036_{16}**

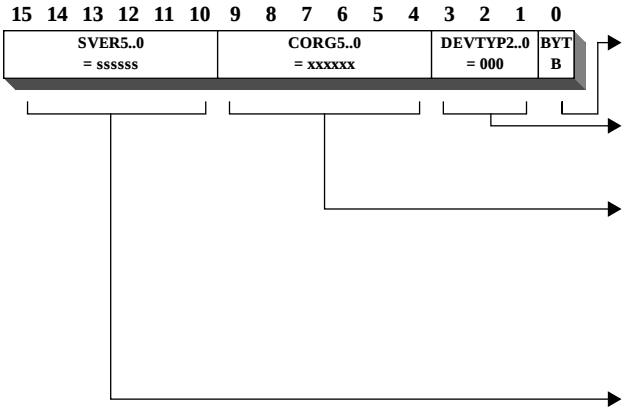

Read-only register.

BYT - Byte width. B=1 means the device reads and writes 9-bit memory bytes. B=0 means 8 bits.

DEVTYP2..0 - Device type. DEVTYP = 000 means that this device is an RDRAM.

CORG5..0 - Core organization. This field specifies the number of bank (3, 4, 5, or 6 bits), row (9, 10, 11, or 12 bits), and column (5, 6, or 7 bits) address bits. The encoding of this field will be specified in a later version of this document.

SVER5..0 - Stepping version. Specifies the mask version number of this device.

Figure 31: Control Registers

Netlist EX2025
Samsung v Netlist
IPR2023-00455

Power State Management

Table 15 summarizes the power states available to a Direct RDRAM. In general, the lowest power states have the longest operational latencies. For example, the relative power levels of PDN state and STBY state have a ratio of about 1:110, and the relative access latencies to get read data have a ratio of about 250:1.

PDN state is the lowest power state available. The information in the RDRAM core is maintained with self-refresh; an internal timer automatically refreshes all rows of all banks. PDN has a relatively long exit latency (t_{PXB}) because the TCLK/RCLK block must resynchronize itself to the external clock signal.

NAP state is another low-power state in which either self-refresh or REFA-refresh are used to maintain the core. See "Refresh" on page 38 for a description of the two refresh mechanisms. NAP has a shorter exit latency (t_{NXB}) than PDN because the TCLK/RCLK block maintains its synchronization state relative to the external clock signal. This imposes a limit (t_{NLIMIT}) on how long an RDRAM may remain in NAP state before briefly returning to STBY or ATTN to update this synchronization state.

Table 15: Power State Summary

Power State	Description	Blocks consuming power	Power State	Description	Blocks consuming power
PDN	Powerdown state.	Self-refresh	NAP	Nap state. Similar to PDN except lower wake-up latency.	Self-refresh or REFA-refresh TCLK/RCLK-Nap
STBY	Standby state. Ready for ROW packets.	REFA-refresh TCLK/RCLK ROW demux receiver	ATTN	Attention state. Ready for ROW and COL packets.	REFA-refresh TCLK/RCLK ROW demux receiver COL demux receiver
ATTNR	Attention read state. Ready for ROW and COL packets. Sending Q (read data) packets.	REFA-refresh TCLK/RCLK ROW demux receiver COL demux receiver DQ mux transmitter Core power	ATTNW	Attention write state. Ready for ROW and COL packets. Ready for D (write data) packets.	REFA-refresh TCLK/RCLK ROW demux receiver COL demux receiver DQ demux receiver Core power

The NAPRC command causes a napdown operation if the RDRAM's NCBIT is set. The NCBIT is not directly visible. It is undefined on reset. It is set by a NAP or NAPRC command to the RDRAM, and it is cleared by an ACT command to the RDRAM. It permits a controller to manage a set of RDRAMs in a mixture of power states.

Netlist EX2025
Samsung v Netlist
IPR2023-00455

Table 16 summarizes representative values for the I_{DD} components used by the various power states. The components are totaled under "I_{DD} - Supply Current Profile" on page 40.

Each component corresponds to a block in the RDRAM. In addition to the interface blocks (TCLK / RCLK, ROW demux, COL demux, D demux, and Q mux), the core is divided into two blocks: the sense amps, which can be performing either a RD or WR command, and the banks, which can be performing up to four (4 = t_{RC} / t_{RR}) simultaneous row access operations (ACT and PRER commands).

Table 16: Representative I_{DD} Components

I_{DD} Component	Block	Representative $I_{DD,MAX}$ value
I_{REF}	Self-refresh, INIT.LSR=1[a]	TBD
	Self-refresh, INIT.LSR=0	TBD
	REFA-refresh	TBD
I_{NAP}	TCLK / RCLK-Nap	TBD
I_{FAST}	TCLK / RCLK	TBD
I_{ROW}	ROW demux receiver	TBD
I_{COL}	COL demux receiver	TBD
I_D	DQ demux receiver	TBD
I_Q	DQ mux transmitter	TBD[b]
$I_{RD/WR}$	Core - RD / WR sense amp	TBD
I_{ACT}	Core - ACT bank	TBD[c]

a. The LSR bit in the INIT control register sets self-refresh rate.
b. This does not include the I_{OL} sink current. The RDRAM dissipates $I_{OL} \cdot V_{OL}$ in the output driver when a logic one is driven.
c. Up to four banks can be performing ACT / PRER operations

Figure 32 sumarizes the transition conditions needed for moving between the various power states. Note that NAP and PDN have been divided into two substates (NAP-A / NAP-S and PDN-A / PDN-S) to account for the fact that a NAP or PDN exit may be made to either ATTN or STBY states.

At initialization, the SETR command in an SRQ packet will put the RDRAM into PDN-S state. The PDN exit sequence involves an optional PDEV specification and bits on the CMD and SIO_{IN} pins.

Once the RDRAM is in STBY, it will move to the ATTN / ATTNR / ATTNW states when it receives a non-broadcast ROW packet. The RDRAM returns to STBY from these three states when it receives a RLX command. Alternatively, it may enter NAP or PDN state from ATTN or STBY states with a NAPR or PDNR command in an ROWR packet. The PDN or NAP exit sequence involves an optional PDEV specification and bits on the CMD and SIO_{IN} pins. The RDRAM returns to the ATTN or STBY state it was originally in when it first entered NAP or PDN.

An RDRAM may only remain in NAP state for a time t_{NLIMIT}. It must periodically return to ATTN or STBY.

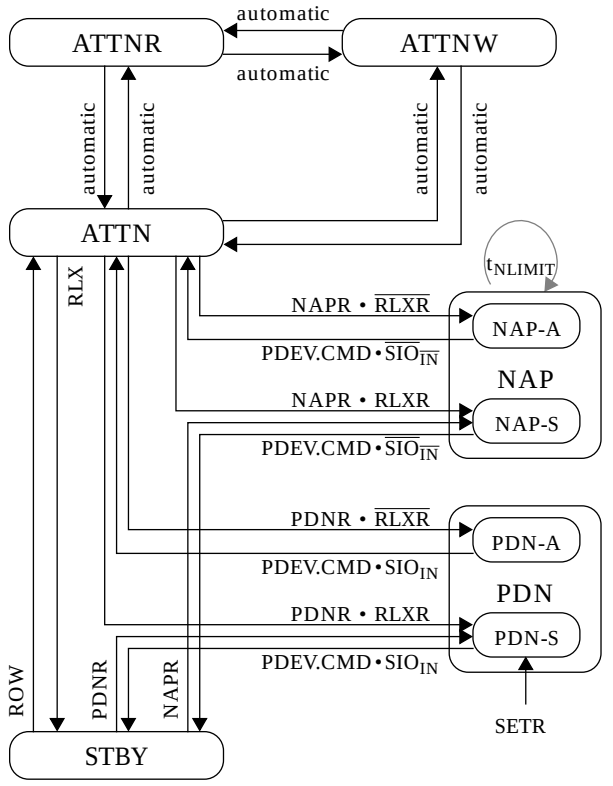

Notation:
SETR - SETR command in SRQ packet
PDNR - PDNR command in ROWR packet
NAPR - NAPR command in ROWR packet
RLXR - RLX command in ROWR packet
RLX - RLX command in ROWR,COLC,COLX packets
ROW - ROWA packet or ROWR packet (non-broadcast)
PDEV.CMD - (PDEV=DEVID) • (CMD=01)
SIO_{IN} - SIO_{IN} input value

Figure 32: Power State Transition Diagram

STBY state is the normal idle state of the RDRAM. In this state all banks and sense amps have usually been left precharged and ROWA and ROWR packets on the ROW pins are being monitored. When a non-broadcast ROW packet addressed to the RDRAM is seen, the RDRAM enters ATTN state (see the right side of Figure 33). This requires a time t_{SA} during which the

Netlist EX2025
Samsung v Netlist
IPR2023-00455

RDRAM activates the specified row of the specified bank. A time t_{FRM} after the ROW packet, the RDRAM will be able to frame COL packets (this framing parameter is less than or equal to the $t_{RCD,MIN}$ of the RDRAM). Once in ATTN state, the RDRAM will automatically transition to the ATTNW and ATTNR states as it receives WR and RD commands.

Once the RDRAM is in ATTN, ATTNW, or ATTNR states, it will remain there until it is explicitly returned to the STBY state with a RLX command. A RLX command may be given in an ROWR, COLC , or COLX packet (see the left side of Figure 33). It is usually given after all banks of the RDRAM have been precharged; if other banks are still activated, then the RLX command would not be given.

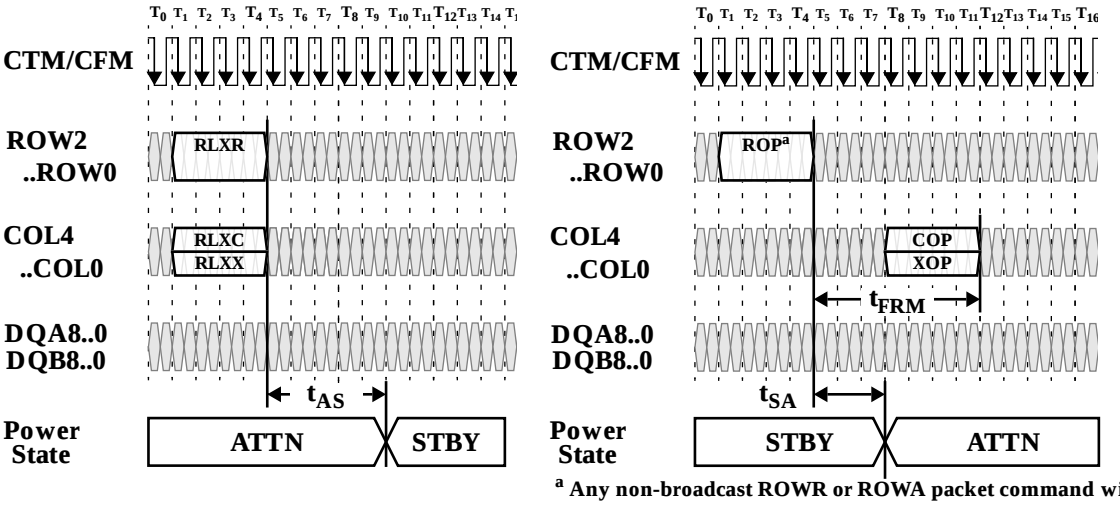

[a] Any non-broadcast ROWR or ROWA packet command will cause STBY exit

Figure 33: STBY Entry (left) and STBY Exit (right)

Figure 34 shows the NAP entry sequence (left). NAP state is entered by sending a NAPR command in a ROW packet. A time t_{ASN} is required to enter NAP state (this specification is provided for power calculation purposes). The clock on CTM/CFM must remain stable for a time t_{CD} after the NAPR command.

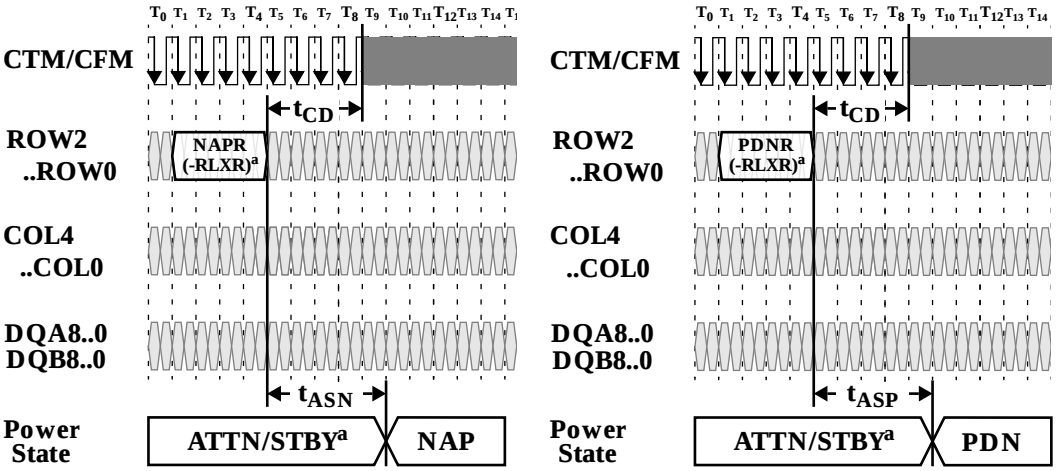

[a] If optional RLXR command is used, the (eventual) NAP/PDN exit will be to STBY state, otherwise it will be to ATTN state

Figure 34: NAP Entry (left) and PDN Entry (right)

The RDRAM may be in ATTN or STBY state when the NAPR command is issued. When NAP state is exited, the RDRAM will return to the original starting state (ATTN or STBY). If it is in ATTN state and a RLXR command is specified with NAPR, then the RDRAM will return to STBY state when NAP is exited.

Netlist EX2025
Samsung v Netlist
IPR2023-00455

Figure 34 also shows the PDN entry sequence (right). PDN state is entered by sending a PDNR command in a ROW packet. A time t_{ASP} is required to enter PDN state (this specification is provided for power calculation purposes). The clock on CTM / CFM must remain stable for a time t_{CD} after the PDNR command.

The RDRAM may be in ATTN or STBY state when the PDNR command is issued. When PDN state is exited, the RDRAM will return to the original starting state (ATTN or STBY). If it is in ATTN state and a RLXR command is specified with PDNR, then the RDRAM will return to STBY state when PDN is exited.

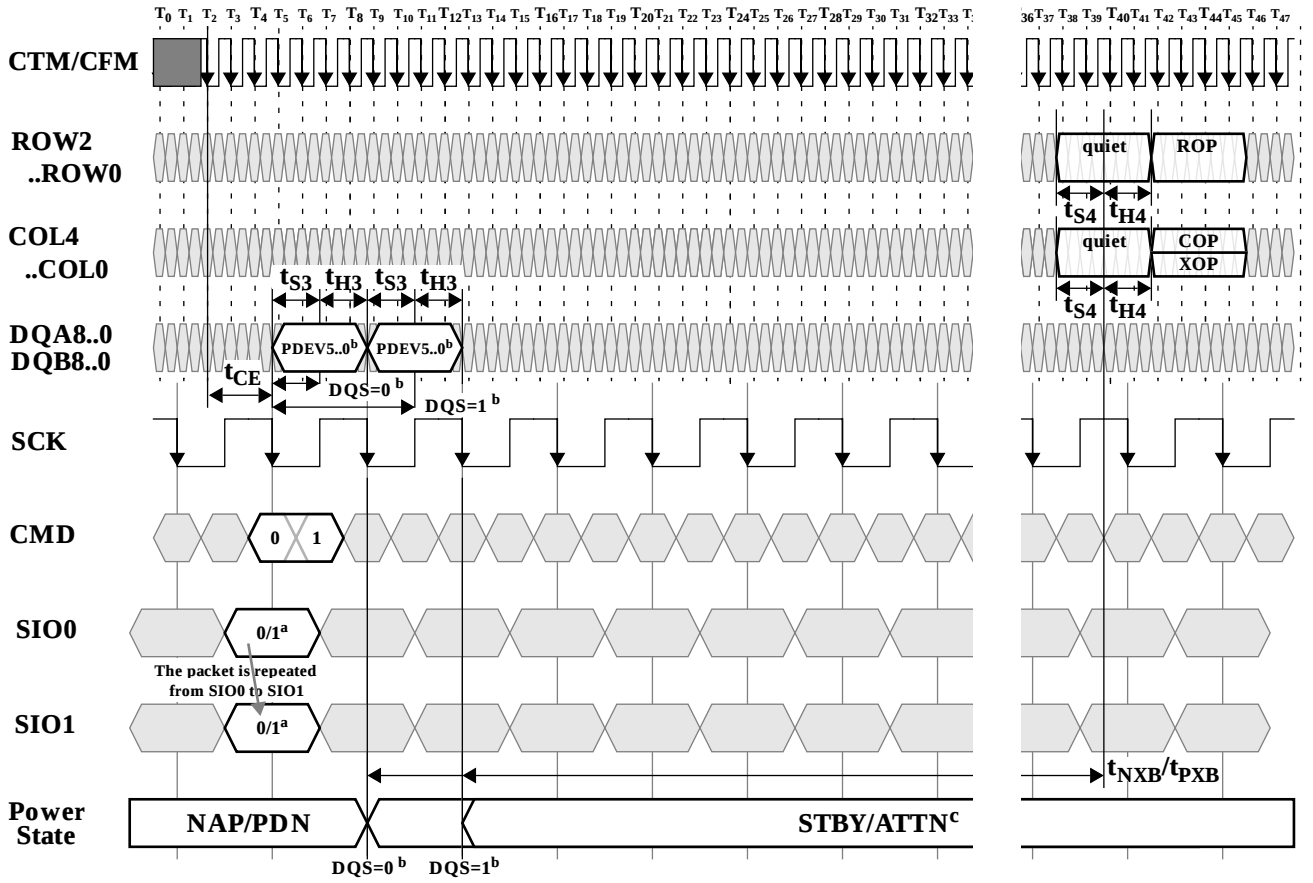

[a] Use 0 for NAP exit, 1 for PDN exit
[b] Device selection timing slot is selected by DQS field of NAPX register
[c] Exit to STBY or ATTN depends upon whether RLXR was asserted at NAP or PDN entry time

Figure 35: NAP and PDN Exit

Figure 35 also shows the NAP and PDN exit sequences. These sequences are virtually identical; the minor differences will be highlighted in the following description.

Before NAP or PDN exit, the CTM / CFM clock must be stable for a time t_{CE}. Then, on a falling and rising edge of SCK, if there is a “01” on the CMD input, NAP or PDN state will be exited. Also, on the falling SCK edge the SIO_{CD} input must be at a 0 for NAP exit and 1 for PDN exit.

If the PSX bit of the INIT register is 0, then a device PDEV5..0 is specified for NAP or PDN exit on the DQA5..0 pins. This value is driven on the rising SCK edge 0.5 or 1.5 SCK cycles after the original falling edge, depending upon the value of the DQS bit of the NAPX register. If the PSX bit of the INIT register is 1, then the RDRAM ignores the PDEV5..0 address packet and exits NAP or PDN when the wake-up sequence is presented on the CMD wire.

The ROW and COL pins must be quiet at a time t_{NXB} or t_{PXB} after the indicated falling SCK edge. After that, ROW and COL packets may be directed to the RDRAM which is now in ATTN or STBY state.

Netlist EX2025
Samsung v Netlist
IPR2023-00455

Refresh

RDRAMs, like any other DRAM technology, use volatile storage cells which must be periodically refreshed. This is accomplished with the REFA command. Figure 36 shows an example of this.

The REFA command in the transaction is a broadcast command (DR4T and DR4F are both set in the ROWR packet), so that in all devices bank number Ba is activated with row number REFR, where REFR is a control register. The controller increments the bank address Ba for the next REFA command. When Ba is equal to its maximum value, the RDRAM automatically increments REFR for the next REFA command.

On average, these REFA commands are sent once every $t_{REF} / 2^{BBIT+RBIT}$ (where BBIT and RBIT are control registers) so that each row of each bank is refreshed once every t_{REF} interval.

The REFA command is equivalent to an ACT command, in terms of the way that it interacts with other packets. In the example, an ACT command is sent after t_{RR} to address b0, a different (non-adjacent) bank than the REFA command.

A second ACT command can be sent after a time t_{RC} to address c0, the same bank (or an adjacent bank) as the REFA command.

Note that a broadcast REFP command is required a time t_{RAS} after the initial REFA command in order to precharge the refreshed bank in all RDRAMs.

It is also possible to interleave refresh transactions (not shown). In the figure, the ACT b0 command would be replaced by a REFA b0 command. The b0 address would be broadcast to all devices, and would be {Broadcast,Ba+2,REFR}. Note that the bank address must skip by two to avoid adjacent bank interference. A possible bank incrementing pattern would be: {8, 10, 12, 14, 0, 2, 4, 6, 1, 3, 5, 7, 9, 11, 13, 15}. Every time bank 15 is reached, the REFP command would automatically increment the REFR register.

A second refresh mechanism is available for use in PDN and NAP power states. This mechanism is called self-refresh mode. When the PDN power state is entered, or when NAP power state is entered with the NPRF0 control register bit set, then self-refresh is automatically started for the RDRAM.

Self-refresh uses an internal time base reference in the RDRAM. This causes an activate and precharge to be carried out once in every $t_{REF} / 2^{BBIT+RBIT}$ interval. The REFB and REFR control registers are used to keep track of the bank and row being refreshed.

Before a controller places an RDRAM into self-refresh mode, it should perform REF refreshes until the bank address is equal to the maximum value. This ensures that no rows are skipped. Likewise, when a controller returns an RDRAM to REF refresh, it should start with the minimum bank address value (zero).

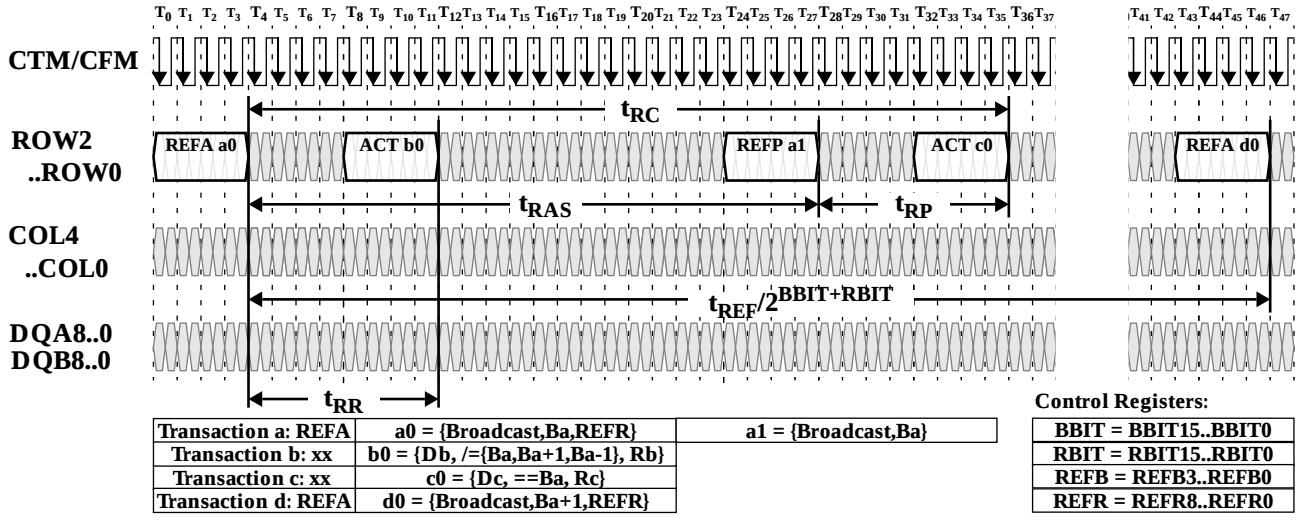

Figure 36: REFA/REFP Refresh Transaction Example

Netlist EX2025
Samsung v Netlist
IPR2023-00455

Current and Temperature Control

Figure 37 shows an example of a transaction which performs current control calibration. It is necessary to perform this operation once to every RDRAM in every t_{CCTRL} interval in order to keep the I_{OL} output current in its proper range.

This example uses four COLX packets with a CAL command. These cause the RDRAM to drive four calibration packets Q(a0) a time $t_{CAC}+t_{RDLY}$ later; the timing is identical to the timing of a memory read command RD, so the transaction may be treated like a RD from an interaction standpoint. These calibration packets are driven on the DQA5..3 and DQB5..3 wires only; the remaining DQA and DQB wires are not used during these calibration packets. The last COLX packet also contains a SAM command (concatenated with the CAL command). The RDRAM samples the last calibration packet and adjusts its I_{OL} current value.

Unlike REF commands, CAL and SAM commands cannot be broadcast. This is because the calibration packets from different devices would interfere. Therefore, a current control transaction must be sent every t_{CCTRL} / N, where N is the number of RDRAMs on the Channel. The device field Da of the address a0 in the CAL / SAM command should be incremented after each transaction.

Current control and refresh may be merged together to save bandwidth on the Channel. This is because the refresh transaction consumes bandwidth on the ROW pins and the current control transaction consumes bandwidth on the COL, DQA, and DQB pins.

Figure 38 shows an example of a temperature calibration sequence to the RDRAM. A later version of this document will provide more details about this sequence.

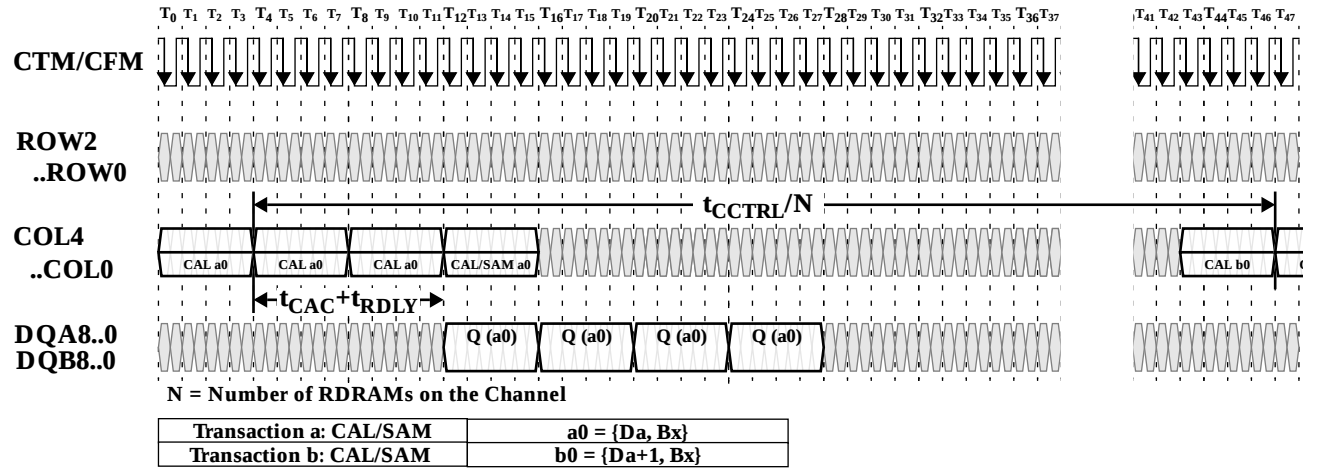

Figure 37: Current Control CAL/SAM Transaction Example

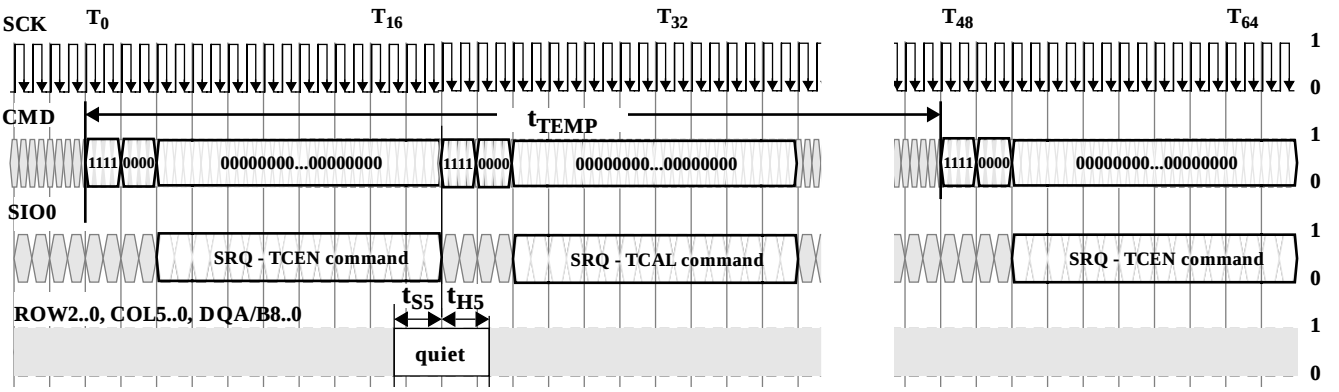

Figure 38: Temperature Calibration (TCEN-TCAL) Transactions to RDRAM

Netlist EX2025
Samsung v Netlist
IPR2023-00455

Absolute Maximum Ratings

Symbol	Parameter	Min	Max	Unit
$V_{I,ABS}$	Voltage applied to any RSL pin with respect to Gnd	- 0.3	V_{DD}+0.3	V
$V_{I,CMOS,ABS}$	Voltage applied to any CMOS pin with respect to Gnd	- 0.3	V_{DD}+0.3	V
$V_{DD,ABS}$	Voltage on VDD with respect to Gnd	- 0.3	V_{DD}+1.0	V
$T_{J,ABS}$	Junction temperature under bias	- 55	125	°C
T_{STORE}	Storage temperature	- 55	125	°C

Thermal Parameters

Symbol	Parameter and Conditions	Min	Max	Unit
T_J	Junction operating temperature	0	100	°C
Θ_{JC}	Junction-to-Case thermal resistance		TBD	°C / Watt

I_{DD} - Supply Current Profile

Power State	RDRAM blocks consuming power	-600 Max[a]	-800 Max[a]	Unit
PDN	Self-refresh only (INIT.LSR=0 / 1)	TBD	TBD	mA
NAP	Refresh, T / RCLK-Nap	TBD	TBD	mA
STBY	Refresh, T / RCLK-Fast, ROW-demux	TBD	TBD	mA
ATTN	Refresh, T / RCLK-Fast, ROW-demux, COL-demux	TBD	TBD	mA
ATTNW	Refresh,T / RCLK-Fast, ROW-demux,COL-demux,DQ-demux,1 • WR-SenseAmp,4 • ACT-Bank	TBD	TBD	mA
ATTNR	Refresh, T / RCLK-Fast, ROW-demux, COL-demux, DQ- mux, 1 • RD-SenseAmp, 4 • ACT-Bank	TBD[b]	TBD[b]	mA

a. These I_{DD} numbers are manufacturer-dependent; the numbers shown are representative maximum current levels at 1200 / 1600 MB / s.
b. This does not include the I_{OL} sink current. The RDRAM dissipates $I_{OL} \cdot V_{OL}$ in each output driver when a logic one is driven.

Electrical Conditions

Symbol	Parameter and Conditions	Min	Max	Unit
V_{DD}, V_{DDA}	Supply voltage	2.50 - 0.13	2.50 + 0.13	V
V_{CMOS}	CMOS supply voltage in 2.5V system	2.50 - 0.13	2.50 + 0.13	V
	CMOS supply voltage in 1.8V system	1.80 - 0.1	1.80 + 0.1	V
V_{REF}	Reference voltage	1.40 - 0.2	1.40 + 0.2	V
V_{IL}	RSL input low voltage	V_{REF} - 0.5	V_{REF} - 0.2	V
V_{IH}	RSL input high voltage	V_{REF} + 0.2	V_{REF} + 0.5	V
$V_{IL,CMOS}$	CMOS input low voltage	- 0.3	0.3	V
$V_{IH,CMOS}$	CMOS input high voltage	V_{CMOS}-0.3	V_{CMOS}+0.3	V

Netlist EX2025
Samsung v Netlist
IPR2023-00455

Electrical Characteristics

Symbol	Parameter and Conditions	Min	Max	Unit
I_{REF}	V_{REF} current @ $V_{REF,MAX}$	-10	10	µA
I_{OH}	RSL output high current @ ($0 \le V_{OUT} \le VDD$)	-10	10	µA
I_{ALL}	RSL I_{OL} current @ V_{OL} = 0.9V, $V_{DD,MIN}$, $T_{J,MAX}$[a]	30.0	90.0	mA
ΔI_{OL}	RSL I_{OL} current resolution step	-	1.5	mA
r_{OUT}	Dynamic output impedance	150	-	Ω
$I_{I,CMOS}$	CMOS input leakage current @ ($0 \le V_{I,CMOS} \le VDD$)	-10.0	10.0	µA
$V_{OL,CMOS}$	CMOS output voltage @ $I_{OL,CMOS}$= 1.0mA	-	0.3	V
$V_{OH,CMOS}$	CMOS output high voltage @ $I_{OH,CMOS}$= -0.25mA	V_{CMOS}-0.3	-	V

a. This measurement is made in manual current control mode; i.e. with all output devices sinking current.

Capacitance and Inductance

Symbol	Parameter and Conditions	Min	Max	Unit
C_I	RSL input parasitic capacitance	2.0	2.4	pF
ΔC_I	Variation of RSL input parasitic capacitance between inputs		0.08	pF
R_I	RSL input parasitic resistance	5.0	15.0	Ω
L_I	RSL input parasitic inductance		5.0	nH
$C_{I,CMOS}$	CMOS input parasitic capacitance		2.4	pF

Timing Characteristics

Symbol	Parameter	600 Min	600 Max	800 Min	800 Max	Unit
t_Q	CTM-to-DQA / DQB output time	-0.4	+0.4	-0.3	+0.3	ns
t_{QR}, t_{QF}	DQA / DQB output rise and fall times	0.2	0.45	0.2	0.45	ns
t_{Q1}	SCK-to-SIO0 delay @ C_{LOAD} = 40pF (SD read packet).	-	10	-	10	ns
t_{QR1}, t_{QF1}	SIO_{OUT} rise / fall @ C_{LOAD} = 40pF	-	5	-	5	ns
t_{PROP1}	SIO0-to-SIO1 delay @ C_{LOAD} = 40pF[a]	-	10	-	10	ns
t_{NXB}	NAP exit delay - phase B	-	100	-	100	ns
t_{PXB}	PDN exit delay - phase B	-	10	-	10	µs
t_{AS}	ATTN-to-STBY power state delay	1	4	1	4	t_{CYCLE}
t_{SA}	STBY-to-ATTN power state delay	-	3	-	3	t_{CYCLE}
t_{ASN}	ATTN / STBY-to-NAP power state delay	-	TBD	-	TBD	t_{CYCLE}
t_{ASP}	ATTN / STBY-to-PDN power state delay	-	TBD	-	TBD	t_{CYCLE}

a. This parameter also applies to the SIO1-to-SIO0 delay for an SD read data packet.

Netlist EX2025
Samsung v Netlist
IPR2023-00455

Recommended Timing Conditions

Symbol	Parameter	600 Min	600 Max	800 Min	800 Max	Unit
t_{CR}, t_{CF}	CTM and CFM input rise and fall times	0.2	0.6	0.2	0.6	ns
t_{CYCLE}	CTM and CFM cycle times	3.33	3.75	2.50	3.33	ns
t_{CH}, t_{CL}	CTM and CFM high and low times	40%	60%	40%	60%	t_{CYCLE}
t_{TR}	CTM-CFM differential	0	4.0	0	4.0	t_{CYCLE}
t_{DR}, t_{DF}	DQA / DQB / ROW / COL input rise / fall times	0.2	0.6	0.2	0.6	ns
t_S	DQA / DQB / ROW / COL-to-CFM setup time	0.275	-	0.2	-	ns
t_H	CFM-to-DQA / DQB / ROW / COL hold time	0.275	-	0.2	-	ns
t_{DR1}, t_{DF1}	SIO0, SIO1[a], CMD, SCK input rise and fall times	-	3.0	-	3.0	ns
t_{CYCLE1}	SCK cycle time - Serial control register transactions	1000	-	1000	-	ns
	SCK cycle time - Power transitions	10	-	10	-	ns
t_{CH1}, t_{CL1}	SCK high and low times	40%	60%	40%	60%	t_{CYCLE1}
t_{S1}	CMD setup time	0	-	0	-	ns
t_{H1}	CMD hold time	2	-	2	-	ns
t_{S2}	SIO0 setup time	0	-	0	-	ns
t_{H2}	SIO0 hold time	10	-	10	-	ns
t_{S3}	PDEV setup time on DQA5..0	4.5	-	4.5	-	ns
t_{H3}	PDEV hold time on DQA5..0	1	-	1	-	ns
t_{S4}	ROW2..0, COL4..0 setup time for quiet window	-1	-	-1	-	t_{CYCLE}
t_{H4}	ROW2..0, COL4..0 hold time for quiet window	5	-	5	-	t_{CYCLE}
t_{S5}	ROW, COL,DQ setup time for quiet window	0	-	0	-	t_{CYCLE}
t_{H5}	ROW, COL,DQ hold time for quiet window	500	-	500	-	ns
t_{CE}	CTM / CFM stable before NAP / PDN exit	2	-	2	-	t_{CYCLE}
t_{CD}	CTM / CFM stable after NAP / PDN entry	8	-	8	-	t_{CYCLE}
t_{FRM}	ROW packet to COL packet ATTN framing delay	7	-	7	-	t_{CYCLE}
t_{NLIMIT}	Maximum time in NAP mode		10.0		10.0	µs
t_{REF}	Refresh interval		32		32	ms
t_{CCTRL}	Current control interval		100		100	ms
t_{TEMP}	Temperature control interval		100		100	ms
t_{RAS}	RAS interval (time a row may stay activated)		64		64	µs
t_{PAUSE}	RDRAM substrate bias generator delay		200.0		200.0	µs

a. This parameter applies to the SIO1 pin for SD read packets, otherwise it refers to the SIO1 pin.

Netlist EX2025
Samsung v Netlist
IPR2023-00455

Timing Parameters

Table 17: Timing Parameter Summary

Parameter	Description	Min -40	Min -45	Min -50	Min -60[a]	Max	Units
t_{RC}	Row Cycle time of RDRAM banks -the interval between ROWA packets with ACT commands to the same bank. See Figure 16 and Figure 17.	28	32	34	28	-	t_{CYCLE}
t_{RAS}	RAS-asserted time of RDRAM bank - the interval between ROWA packet with ACT command and next ROWR packet with PRER[b] command to the same bank. See Figure 16 and Figure 17.	20	24	24	20	-	t_{CYCLE}
t_{RP}	Row Precharge time of RDRAM banks - the interval between ROWR packet with PRER[b] command and next ROWA packet with ACT command to the same bank. See Figure 16 and Figure 17.	8	8	10	8	-	t_{CYCLE}
t_{PP}	Precharge-to-precharge time of RDRAM device - the interval between successive ROWR packets with PRER[b] commands to any banks of the same device. See Figure 13.	8	8	8	8	-	t_{CYCLE}
t_{RR}	RAS-to-RAS time of RDRAM device - the interval between successive ROWA packets with ACT commands to any banks of the same device. See Figure 14.	8	8	8	8	-	t_{CYCLE}
t_{RCD}	RAS-to-CAS Delay - the interval from ROWA packet with ACT command to COLC packet with RD or WR command). See Figure 16 and Figure 17. Note - the RAS-to-CAS delay seen by the RDRAM core ($t_{RCD,CORE}$) is equal to $t_{RCD,CORE} = 1 + t_{RCD}$ because of differences in the row and column paths through the RDRAM interface.	7	9	11	9	-	t_{CYCLE}
t_{RAC}	RAS Access delay - effective interval from ROWA packet with ACT command to Q read data. This is equal to: $t_{RAC} = 1 + t_{RCD} + t_{CAC.}$	16	18	20	18	-	t_{CYCLE}
t_{CAC}	CAS Access delay - the minimum interval from RD command to Q read data. See Figure 5.	8	8	8	8	8	t_{CYCLE}
t_{CWD}	CAS Write Delay (interval from WR command to D write data. See Figure 5.	6	6	6	6	6	t_{CYCLE}
t_{CC}	CAS-to-CAS time of RDRAM bank - the interval between successive COLC commands). See Figure 16 and Figure 17.	4	4	4	4	-	t_{CYCLE}
t_{PACKET}	Length of ROWA, ROWR, COLC, COLM or COLX packet. See Figure 4.	4	4	4	4	4	t_{CYCLE}
t_{RTR}	Interval from COLC packet with WR command to COLC packet which causes retire, and to optional COLM packet with bytemask. See Figure 18.	8	8	8	8	-	t_{CYCLE}
t_{OFFP}	The interval (offset) from COLC packet with RDA command, or from COLC packet with retire command (after WRA automatic precharge), or from COLX packet with PREX command to the equivalent ROWR packet with PRER. See Figure 15.	4	4	4	4	4	t_{CYCLE}
t_{RDP}	Interval from last COLC packet with RD command to ROWR packet with PRER. See Figure 16.	4	4	4	4	-	t_{CYCLE}
t_{RTP}	Interval from last COLC packet with automatic retire command to ROWR packet with PRER. See Figure 17.	4	4	4	4	-	t_{CYCLE}

a. Note that the $t_{CYCLE,MIN}$ is 3.3ns, not 2.5ns.
b. Or equivalent PREC or PREX command. See Figure 15.

Netlist EX2025
Samsung v Netlist
IPR2023-00455

RSL Clocking and Bit Transport

Figure 39 shows the timing required to receive or transmit a pair of RSL bits. A single clock cycle T_2 from the central figure is expanded to show the details associated with a falling edge and rising edge of the CFM and CTM clock inputs (the CTFN and CTMN inputs will always be at the opposite signal level). Note that RSL signals are low-true; a high voltage is logic zero.

Figure 39a shows the rise / fall requirements of RSL input signals, and the rise / fall characteristics of RSL output signals.

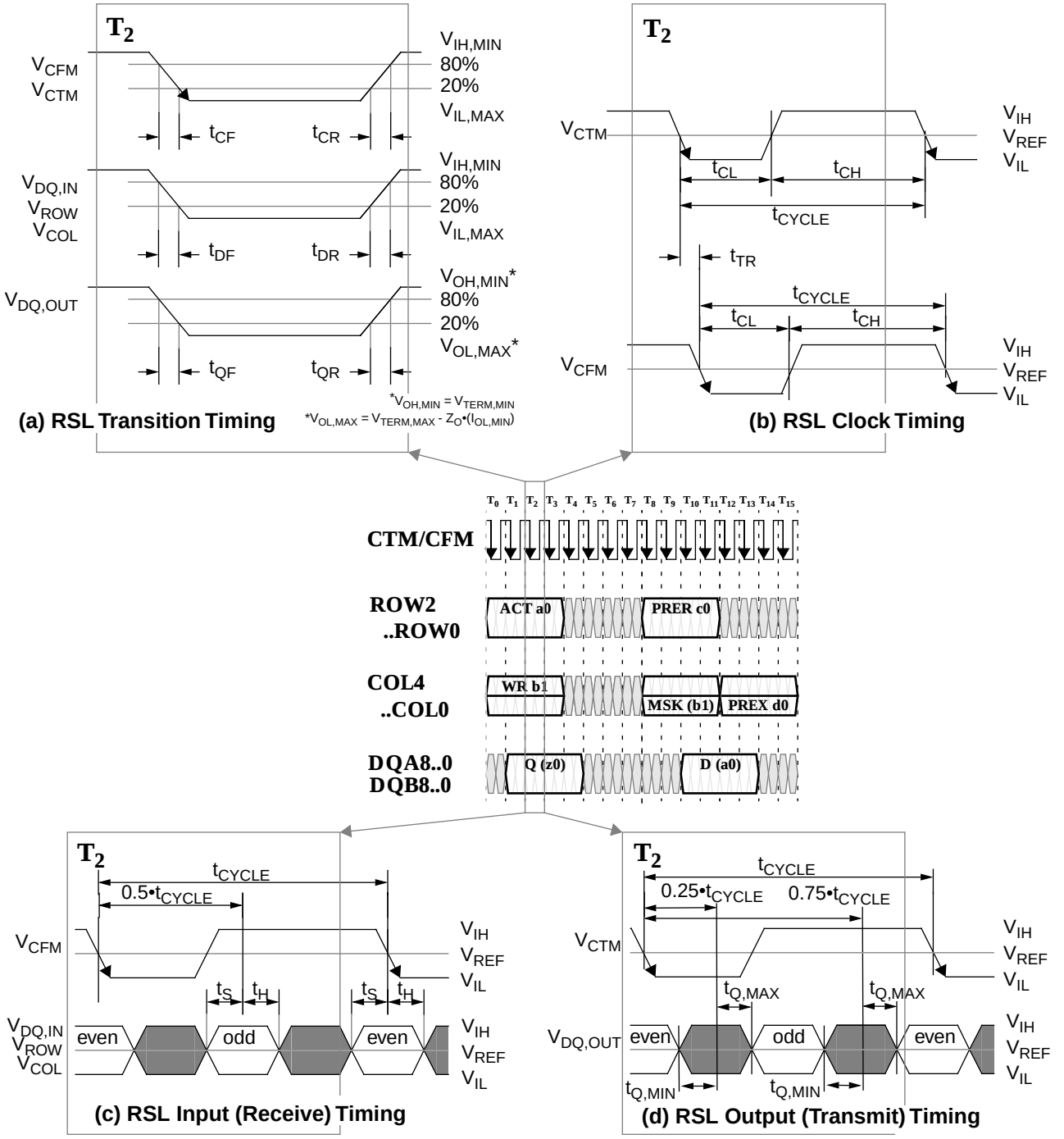

Figure 39: RSL Timing - Clocking and Bit Transport

Netlist EX2025
Samsung v Netlist
IPR2023-00455

Figure 39b shows the duty cycle requirements of the RSL clock inputs. It also shows the t_{TR} skew parameter (the amount of time by which CTM may lead CFM).

Figure 39c shows the setup and hold requirements of RSL inputs. Even bits are sampled on the falling edge of CFM and odd bits are sampled at the half-cycle (50%) point. The RDRAM synthesizes the 25%, 50%, and 75% timing points so that two bits may be received or transmitted per clock cycle per signal wire.

Figure 39d shows the valid window of RSL outputs. Even bits are driven from the 75% point and odd bits from the 25% point.

CMOS Clocking and Bit Transport

Figure 40 shows the timing required to receive or transmit a CMOS bit. A single clock cycle is expanded to show the details associated with a falling edge of the CLIN and CLOUT clock inputs. Note that all CMOS signals are low-true; a high voltage is logic zero.

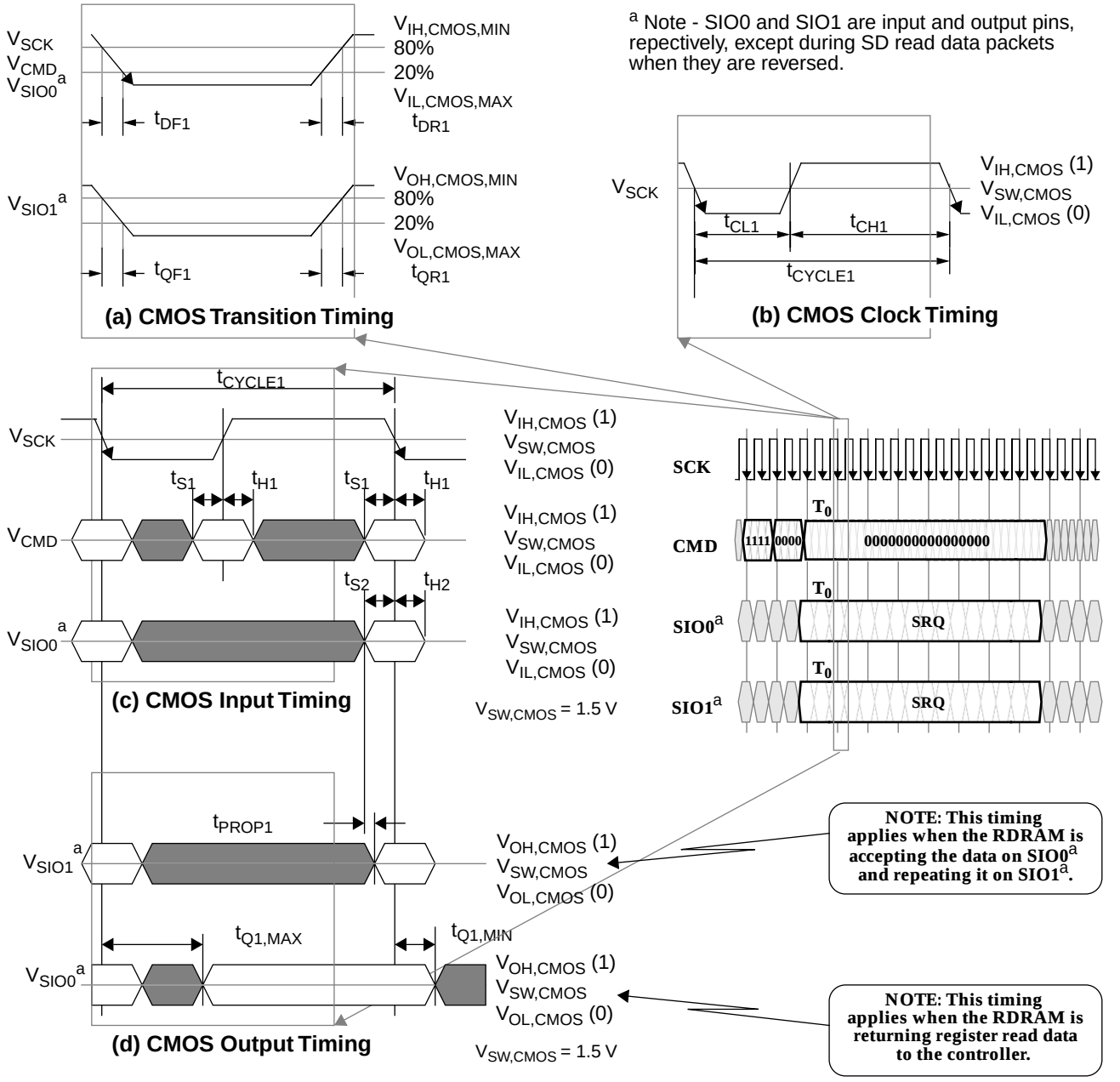

Figure 40: CMOS Timing- Clocking and Bit Transport

Netlist EX2025
Samsung v Netlist
IPR2023-00455

Glossary of Terms

ACT Activate command from AV field.

activate To access a row and place in sense amp.

adjacent Two RDRAM banks which share sense amps (also called doubled banks).

ASYM CCA register field for RSL V_{OL}/V_{OH}.

ATTN Power state - ready for ROW/COL packets.

ATTNR Power state - transmitting Q packets.

ATTNW Power state - receiving D packets.

AV Opcode field in ROW packets.

bank A block of $2^{RBIT} \cdot 2^{CBIT}$ storage cells in the core of the RDRAM.

BC Bank address field in COLC packet.

BBIT CNFGA register field - # bank address bits.

broadcast An operation executed by all RDRAMs.

BR Bank address field in ROW packets.

bubble Idle cycle(s) on RDRAM pins needed because of a resource constraint.

BYT CNFGB register field - 8/9 bits per byte.

BX Bank address field in COLX packet.

C Column address field in COLC packet.

CAL Calibrate (I_{OL}) command in XOP field.

CBIT CNFGB register field - # column address bits.

CCA Control register - current control A.

CCB Control register - current control B.

CFM,CFMN Clock pins for receiving packets.

Channel ROW/COL/DQ pins and external wires.

CLRR Clear reset command from SOP field.

CMD CMOS pin for initialization/power control.

CNFGA Control register with configuration fields.

CNFGB Control register with configuration fields.

COL Pins for column-access control.

COL COLC,COLM,COLX packet on COL pins.

COLC Column operation packet on COL pins.

COLM Write mask packet on COL pins.

column Rows in a bank or activated row in sense amps have 2^{CBIT} dualocts column storage.

command A decoded bit-combination from a field.

COLX Extended operation packet on COL pins.

controller A logic-device which drives the ROW/COL /DQ wires for a Channel of RDRAMs.

COP Column opcode field in COLC packet.

core The banks and sense amps of an RDRAM.

CTM,CTMN Clock pins for transmitting packets.

current control Periodic operations to update the proper I_{OL} value of RSL output drivers.

D Write data packet on DQ pins.

DBL CNFGB register field - doubled-bank.

DC Device address field in COLC packet.

device An RDRAM on a Channel.

DEVID Control register with device address that is matched against DR, DC, and DX fields.

DM Device match for ROW packet decode.

doubled-bank RDRAM with shared sense amp.

DQ DQA and DQB pins.

DQA Pins for data byte A.

DQB Pins for data byte B.

DQS NAPX register field - PDN/NAP exit.

DR,DR4T,DR4F Device address field and packet framing fields in ROWA and ROWR packets.

dualoct 16 bytes - the smallest addressable datum.

DX Device address field in COLX packet.

field A collection of bits in a packet.

INIT Control register with initialization fields.

initialization Configuring a Channel of RDRAMs so they are ready to respond to transactions.

LSR CNFGA register field - low-power self-refresh.

M Mask opcode field (COLM/COLX packet).

MA Field in COLM packet for masking byte A.

MB Field in COLM packet for masking byte B.

MSK Mask command in M field.

MVER Control register - manufacturer ID.

NAP Power state - needs SCK/CMD wakeup.

NAPR Nap command in ROP field.

NAPRC Conditional nap command in ROP field.

NAPXA NAPX register field - NAP exit delay A.

NAPXB NAPX register field - NAP exit delay B.

NOCOP No-operation command in COP field.

NOROP No-operation command in ROP field.

NOXOP No-operation command in XOP field.

Netlist EX2025
Samsung v Netlist
IPR2023-00455

NSR	INIT register field- NAP self-refresh.
packet	A collection of bits carried on the Channel.
PDN	Power state - needs SCK/CMD wakeup.
PDNR	Powerdown command in ROP field.
PDNXA	Control register - PDN exit delay A.
PDNXB	Control register - PDN exit delay B.
pin efficiency	The fraction of non-idle cycles on a pin.
PRE	PREC,PRER,PREX precharge commands.
PREC	Precharge command in COP field.
precharge	Prepares sense amp and bank for activate.
PRER	Precharge command in ROP field.
PREX	Precharge command in XOP field.
PSX	INIT register field - PDN/NAP exit.
PSR	INIT register field - PDN self-refresh.
PVER	CNFGB register field - protocol version.
Q	Read data packet on DQ pins.
R	Row address field of ROWA packet.
RBIT	CNFGB register field - # row address bits.
RD/RDA	Read (/precharge) command in COP field.
read	Operation of accesssing sense amp data.
receive	Moving information from the Channel into the RDRAM (a serial stream is demuxed).
REFA	Refresh-activate command in ROP field.
REFB	Control register - next bank (self-refresh).
REFBIT	CNFGA register field - ignore bank bits (for REFA and self-refresh).
REFP	Refresh-precharge command in ROP field.
REFR	Control register - next row for REFA.
refresh	Periodic operations to restore storage cells.
retire	The automatic operation that stores write buffer into sense amp after WR command.
RLX	RLXC,RLXR,RLXX relax commands.
RLXC	Relax command in COP field.
RLXR	Relax command in ROP field.
RLXX	Relax command in XOP field.
ROP	Row-opcode field in ROWR packet.
row	2^{CBIT} dualocts of cells (bank/sense amp).
ROW	Pins for row-access control
ROW	ROWA or ROWR packets on ROW pins.
ROWA	Activate packet on ROW pins.
ROWR	Row operation packet on ROW pins.
RQ	Alternate name for ROW/COL pins.
RSL	Rambus Signaling Levels.
SAM	Sample (I_{OL}) command in XOP field.
SA	Serial address packet for control register transactions w/ SA address field.
SBC	Serial broadcast field in SRQ.
SCK	CMOS clock pin..
SD	Serial data packet for control register transactions w/ SD data field.
SDEV	Serial device address in SRQ packet.
SDEVID	INIT register field - Serial device ID.
self-refresh	Refresh mode for PDN and NAP.
sense amp	Fast storage that holds copy of bank's row.
SETF	Set fast clock command from SOP field.
SETR	Set reset command from SOP field.
SINT	Serial interval packet for control register read/write transactions.
SIO0,SIO1	CMOS serial pins for control registers.
SOP	Serial opcode field in SRQ.
SRD	Serial read opcode command from SOP.
SRP	INIT register field - Serial repeat bit.
SRQ	Serial request packet for control register read/write transactions.
STBY	Power state - ready for ROW packets.
SVER	Control register - stepping version.
SWR	Serial write opcode command from SOP.
TCAS	TCLSCAS register field - t_{CAS} core delay.
TCLS	TCLSCAS register field - t_{CLS} core delay.
TCLSCAS	Control register - t_{CAS} and t_{CLS} delays.
TCYCLE	Control register - t_{CYCLE} delay.
TDAC	Control register - t_{DAC} delay.
TEST77	Control register - for test purposes.
TEST78	Control register - for test purposes.
TRDLY	Control register - t_{RDLY} delay.
transaction	ROW,COL,DQ packets for memory access.
transmit	Moving information from the RDRAM onto the Channel (parallel word is muxed).
WR/WRA	Write (/precharge) command in COP field.
write	Operation of modifying sense amp data.
XOP	Extended opcode field in COLX packet.

Netlist EX2025
Samsung v Netlist
IPR2023-00455

Table Of Contents

Overview 1
Features 1
Key Timing Parameters/Part Numbers 1
Pinouts and Definitions 2
Pin Description 3
Block Diagram 4
General Description 5
Packet Format 6,7
Field Encoding Summary 8,9
DQ Packet Timing 10
COLM Packet to D Packet Mapping 10,11
ROW-to-ROW Packet Interaction 12, 13
ROW-to-COL Packet Interaction 13
COL-to-COL Packet Interaction 14
COL-to-ROW Packet Interaction 15
ROW-to-ROW Examples 16,17
Row and Column Cycle Description 17
Precharge Mechanisms 18,19
Read Transaction - Example 20
Write Transaction - Example 21
Write/Retire - Examples 22, 23
Interleaved Write - Example 24
Interleaved Read - Example 25
Interleaved RRWW 25
Control Register Transactions 26
Control Register Packets 27
Initialization 28
Control Register Summary 29-34
Power State Management 34-37
Refresh 38
Current and Temperature Control 39
Absolute Maximum Ratings 40
Thermal Parameters 40
I_{DD} - Supply Current Profile 40
Electrical Conditions 40
Electrical Characteristics 41
Capacitance and Inductance 41
Timing Characteristics 41
Recommended Timing Conditions 42
Timing Parameters 43
RSL Clocking and Bit Transport 44
CMOS Clocking and Bit Transport 45
Glossary of Terms 46,47

© Copyright March 1998 Rambus Inc.
All rights reserved.

Direct Rambus and Direct RDRAM are trademarks of Rambus Inc. Rambus, RDRAM, and the Rambus Logo are registered trademarks of Rambus Inc. All other trademarks referenced are property of their respective owners.

This document contains advanced information that is subject to change by Rambus Inc. without notice. Rambus Inc. assumes no responsibility or liability for any use of the information contained herein.

This Rambus document is for design evaluation purposes only. Direct RDRAMs are manufactured and sold by Rambus DRAM partners. Rambus DRAM partners provide data sheets specific to their RDRAM products. For a list of Rambus partners who are providing Direct RDRAMs, see the internet address http://www.rambus.com.

DL0035-00.62

Rambus Inc.
2465 Latham Street
Mountain View, California USA
94040

Telephone: 650-944-8000
Fax: 650-944-8080
http://www.rambus.com

Written by: Frederick A. Ware

Netlist EX2025
Samsung v Netlist
IPR2023-00455