Trials@uspto.gov
571-272-7822

Paper 33
Date: June 26, 2023

UNITED STATES PATENT AND TRADEMARK OFFICE

BEFORE THE PATENT TRIAL AND APPEAL BOARD

SAMSUNG ELECTRONICS CO., LTD.,
Petitioner,

v.

LYNK LABS, INC.,
Patent Owner.

IPR2022-00149
Patent 10,687,400 B2

Before JON B. TORNQUIST, ARTHUR M. PESLAK, and STEPHEN E. BELISLE, *Administrative Patent Judges.*

PESLAK, *Administrative Patent Judge*.

JUDGMENT
Final Written Decision
Determining All Challenged Claims Unpatentable
35 U.S.C. § 314(a)

I. INTRODUCTION

Petitioner, Samsung Electronics Co., Ltd., filed a Petition (Paper 1, "Pet.") requesting an *inter partes* review of claims 7–20 of U.S. Patent No. 10,687,400 B2 (Ex. 1001, "the '400 patent"). In support of the Petition, Petitioner submitted a Declaration of R. Jacob Baker, Ph.D., P.E. Ex. 1002. Patent Owner, Lynk Labs, Inc., filed a Preliminary Response. Paper 12. We instituted this *inter parties* review as to all challenged claims and all grounds presented in the Petition. Paper 16 ("Dec.").

After institution, Patent Owner filed a statutory disclaimer of claims 14 and 18–20. Ex. 2011. Our review is, thus, limited to the remaining claims 7–13 and 15–17 ("the challenged claims").

During the course of trial, Patent Owner filed a response to the Petition. Paper 20 ("PO Resp."). Patent Owner filed a Declaration of Alfred D. Ducharme in support of the Patent Owner Response. Ex. 2001. Petitioner filed a Reply to the Patent Owner Response. Paper 24 ("Pet. Reply"). Petitioner filed a Reply Declaration of R. Jacob Baker, Ph.D., P.E. Ex. 1107. Patent Owner filed a Sur-Reply. Paper 27 ("Sur-reply"). An oral hearing was held on March 28, 2023 and a transcript has been entered into the record. Paper 32 ("Tr.").

We have jurisdiction under 35 U.S.C. § 6. This is a Final Written Decision under 35 U.S.C. § 318(a) as to the patentability of the challenged claims of the '400 patent. For the reasons discussed below, we determine Petitioner establishes by a preponderance of the evidence that all of the challenged claims are unpatentable.

Samsung Ex. 1098, p. 2
Samsung Electronics Co., Ltd. v. Netlist, Inc., IPR2023-00455

A. Related Matters

The parties state that the '400 patent is asserted in *Samsung Electronics Co. v. Lynk Labs, Inc.*, Case No. 1:21-cv-02665 (N.D. Ill.). Pet. 1; Paper 4, 1. The parties also assert that various patents and patent applications may be affected by a decision in this case. Pet. 2–3; Paper 4, 1.

B. Real Parties-in-Interest

Petitioner identifies itself and Samsung Electronics America, Inc. as real parties-in-interest. Pet. 1. Patent Owner identifies itself as the only real party-in-interest. Paper 4, 1.

C. The '400 Patent (Ex. 1001)

The '400 patent is titled AC Light Emitting Diode and AC LED Drive Methods and Apparatus. Ex. 1001, code (54). The '400 patent issued on June 16, 2020 from an application filed on Nov. 22, 2019. *Id.* at codes (45), (22). The '400 patent is related to a series of applications, the earliest of which was filed on Feb. 25, 2005, which in turn relate to a series of provisional applications, the earliest of which was filed on Feb. 25, 2004. *Id.* at code (60).

The '400 patent is directed to "alternating current ('AC') driven LEDs, LED circuits and AC drive circuits and methods." *Id.* at 1:60–62. The '400 patent explains that the disclosed "LED light emitting device and LED light system [are] capable of operating during both the positive and negative phase of an AC power supply." *Id.* at 13:34–36. Embodiments of the '400 patent include a "series string of diodes and/or LEDs having a bridge rectifier connected [there]across." *Id.* at 6:55–57. The '400 patent discloses that the "rectifier … may be mounted on [an] insulating substrate

Samsung Ex. 1098, p. 3
Samsung Electronics Co., Ltd. v. Netlist, Inc., IPR2023-00455

… along with any LEDs" and a capacitor "included in the light emitting devices may like wise [sic] be mounted on [the] substrate." *Id.* at 16:35–45.

Figure 22 of the '400 patent is reproduced below:

FIG. 22

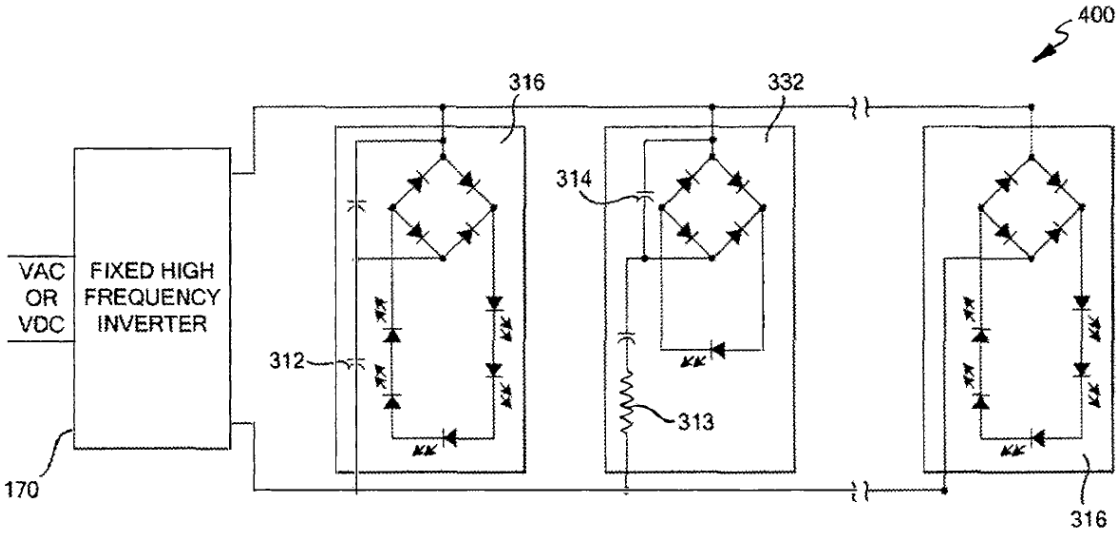

Figure 22 of the '400 patent "shows a schematic view of a preferred embodiment of" an AC lighting system. *Id.* at 11:54–55. System 400, shown in Figure 22, includes a plurality of devices 316, 332 each having at least one LED. *Id.* at 16:19:43, 17:50–51. System 400 is connected to a high frequency inverter AC drive and is driven by an AC drive method. *Id.* at 17:50–52. In particular, device 316 includes plural LEDs 306 connected in series and mounted on insulating substrate 318. *Id.* at 16:21–24, Fig. 18. Device 316 also includes a rectifier that drives the LEDs and that is also mounted on the substrate. *Id.* at 16:34–36. "Any capacitors 312, 314 or resistors 313 included in the light emitting devices may like wise [sic] be mounted on substrate 318." *Id.* at 16:41–43.

Figure 13 of the ’400 patent is reproduced below:

FIG. 13

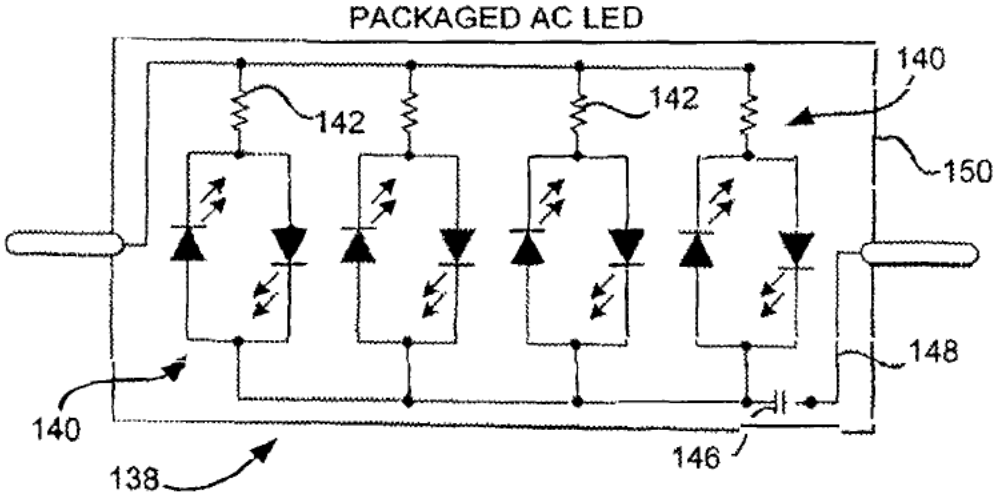

Figure 13 of the ’400 patent “shows a schematic view of a preferred embodiment of” an AC light emitting device. *Id.* at 11:36–37.

In the device shown in Figure 13, individual sets of two opposing parallel light emitting devices 140 are integrated into package 150 and are driven by an AC drive method. *Id.* at 15:47–56. In certain embodiments, the package may include a reflective substrate. *Id.* at 6:1–2; 26:29–36. In addition, having integrated capacitors and resistors of equal or different values enables the devices to operate at different drive currents from a single source AC drive method. *Id.* at 17:55–59; *see also id.* at 14:29–32.

The ’400 patent explains:

> Regardless of whether rectifier 302 and LEDs 306 are integrated or mounted in a single package or are discretely packaged and connected, in order to drop higher voltages any number of LEDs may be connected in series or parallel in a device to match a desired voltage and light output. For example, in a lighting device that is run off of a 120 V source and contains LEDs having a forward operating voltage of 3V each connected to a bridge rectifier having diodes also having a forward operating voltage

> of 3V each, approximately 38 LEDs may be placed in series to drop the required voltage.

Id. at 16:64–17:7.

D. Challenged Claims

Claim 7 is reproduced below with Petitioner's labels [a]–[g] added for ease of reference:

> 7. [a] A lighting system comprising:
>
> [b] an LED circuit array comprising an LED circuit comprising a plurality of LEDs connected in series;
>
> [c] a capacitor;
>
> [d] a bridge rectifier configured to receive an input AC voltage from a mains power source;
>
> [e] a driver connected to the bridge rectifier and configured to provide a rectified output AC voltage to the LED circuit array;
>
> [f] wherein a forward voltage of the LEDs of the LED circuit array matches the rectified input AC voltage output of the driver; and
>
> [g] wherein the LED circuit array, the capacitor, the bridge rectifier, and the driver are all mounted on a single substrate.

Samsung Ex. 1098, p. 6
Samsung Electronics Co., Ltd. v. Netlist, Inc., IPR2023-00455

E. Prior Art and Asserted Grounds

In light of Patent Owner's disclaimer of claims 14 and 18–20 (Ex. 2011), we address the following grounds challenging claims 7–13 and 15–17:

Claim(s) Challenged	35 U.S.C.[1] §	Reference(s)/Basis
7, 9, 11	§ 103(a)	Nerone[2], Martin[3]
8	§ 103(a)	Nerone, Martin, Morgan[4]
10	§ 103(a)	Nerone, Martin, Zinkler[5]
12	§ 103(a)	Nerone, Martin, Michael[6]
13	§ 103(a)	Nerone, Martin, Michael, Gleener[7]
7, 9–11, 17	§ 103(a)	Zhang[8], Martin
8	§ 103(a)	Zhang, Martin, Morgan
15	§ 103(a)	Zhang, Mosebrook[9]
16	§ 103(a)	Zhang, Michael, Gleener

[1] The Leahy-Smith America Invents Act, Pub. L. No. 112-29, 125 Stat. 284 (2011) ("AIA"), included revisions to 35 U.S.C. §§ 102 and 103 that became effective after the earliest claimed priority date of the challenged claims. Because neither party argues otherwise, we apply the pre-AIA version of 35 U.S.C. § 103.
[2] U.S. Patent No. 6,411,045 B1 issued June 25, 2002 (Ex. 1032) ("Nerone").
[3] U.S. Patent Application Publication No. 2004/0206970 A1 published Oct. 21, 2004 (Ex. 1015) ("Martin").
[4] U.S. Patent No. 7,202,613 B2 issued Apr. 10, 2007 (Ex.1033) ("Morgan").
[5] U.S. Patent No. 6,300,725 B1 issued Oct. 9, 2001 (Ex. 1042) ("Zinkler").
[6] U.S. Patent No. 4,656,398 issued Apr. 7, 1987 (Ex. 1008) ("Michael").
[7] U.S. Patent Application Publication No. 2002/0175870 A1 published Nov. 28, 2002 (Ex. 1039) ("Gleener").
[8] U.S. Patent Application Publication No. 2002/0021573 A1 published Feb. 21, 2002 (Ex. 1012) ("Zhang").
[9] U.S. Patent No. 5,982,103 issued Nov. 9, 1999 (Ex. 1018) ("Mosebrook").

II. ANALYSIS

A. Overview

Petitioner bears the burden of establishing the unpatentability of the challenged claims by a preponderance of the evidence. 35 U.S.C. § 316(e); 37 C.F.R. § 42.1(d). This burden of persuasion never shifts to Patent Owner. *Dynamic Drinkware, LLC v. Nat'l Graphics, Inc.*, 800 F.3d 1375, 1378 (Fed. Cir. 2015).

A claim is unpatentable under § 103(a) if the differences between the claimed subject matter and the prior art are such that the subject matter, as a whole, would have been obvious at the time the invention was made to a person having ordinary skill in the art to which said subject matter pertains. *KSR Int'l Co. v. Teleflex Inc.*, 550 U.S. 398, 406 (2007). The question of obviousness is resolved on the basis of underlying factual determinations, including (1) the scope and content of the prior art; (2) any differences between the claimed subject matter and the prior art; (3) the level of skill in the art; and (4) when in evidence, objective indicia of non-obviousness (i.e., secondary considerations)[10]. *Graham v. John Deere Co.*, 383 U.S. 1, 17–18 (1966).

B. Level of Ordinary Skill in the Art

Petitioner contends that a skilled artisan "would have had at least a bachelor's degree in electrical engineering, computer engineering, computer science, physics, or the equivalent, and two or more years of experience with LED devices and/or related circuit design, or a related field." Pet. 7 (citing

[10] No evidence of secondary considerations has been presented by the parties.

Ex. 1002 ¶¶ 20–21). Petitioner further contends that "[m]ore education can supplement practical experience and vice versa." *Id.*

Patent Owner contends that a person of ordinary skill in the art would have "had, at least a bachelor's degree in electrical engineering, computer engineering, computer science, physics, or the equivalent, and two or more years of experience with LED devices and related LED circuit design. Lack of work experience could have been remedied by additional education and vice versa." PO Resp. 7 (citing Ex. 2001 ¶¶ 38–42). Patent Owner contends this is a similar definition as "provided by Petitioner" but Petitioner's definition is "overbroad in several respects, as explained by Dr. Ducharme," including allowing an individual with no experience in LEDs or LED devices to be a person of ordinary skill in the art. *Id.* (citing Ex. 1002 ¶¶ 20–21; Ex. 2001 ¶¶ 40–41).

Petitioner contends that "[t]here is no meaningful dispute over a [person of ordinary skill in the art]." Pet. Reply 1.

We apply Patent Owner's proposed level of ordinary skill in the art because it requires specific experience with LED circuit design, and, thus, more closely aligns with the level of skill reflected in the '400 patent and the prior art of record. However, if we were to apply Petitioner's proposed level of skill, our Decision would not be affected.

C. Claim Construction

We apply the same claim construction standard used by Article III federal courts and the ITC, both of which follow *Phillips v. AWH Corp.*, 415 F.3d 1303 (Fed. Cir. 2005) (en banc), and its progeny. 37 C.F.R. § 42.100(b) (2020). This claim construction standard includes construing claims in accordance with "the ordinary and customary meaning of such

Samsung Ex. 1098, p. 9
Samsung Electronics Co., Ltd. v. Netlist, Inc., IPR2023-00455

claim as understood by one of ordinary skill in the art and the prosecution history pertaining to the patent." *Id.*

Petitioner contends that "no special constructions are necessary." Pet. 8; Pet. Reply 2. "Patent Owner has applied the plain and ordinary meaning of the claim terms." PO Resp. 8.

Upon review of the record, we determine that no claim terms require express construction. *See Nidec Motor Corp. v. Zhongshan Broad Ocean Motor Co.*, 868 F.3d 1013, 1017 (Fed. Cir. 2017) (noting that "we need only construe terms 'that are in controversy, and only to the extent necessary to resolve the controversy'") (citing *Vivid Techs., Inc. v. Am. Sci. & Eng'g, Inc.*, 200 F.3d 795, 803 (Fed. Cir. 1999)).

D. Patent Owner's Contention that Martin is not Available as Prior Art

Patent Owner contends that certain grounds "fail because . . . Martin is not available as prior art in an IPR." PO Resp. 18. Patent Owner contends that "[t]he Petition presumes that Martin qualifies as prior art under § 102(e)(1)" but "Martin is neither a 'patent' nor a 'printed publication' as of the 400 Patent priority date of February 25, 2004." *Id.* at 18–19. Patent Owner further contends that "Martin is not a 'patent' at least because it is an application that abandoned and never issued as a patent" and "is not prior art consisting of . . . printed publications under 35 U.S.C. § 311(b) because it was not published before the 400 Patent priority date." *Id.* at 19. According to Patent Owner, "Martin first became public on its publication date of October 21, 2004 . . . which is after the February 25, 2004 priority date of the 400 Patent." *Id.* (citing Pet. 6; Ex. 1002 ¶ 18; Ex. 1005, 1); *see also id.* ("The effective date of 'printed publication' prior art is the date it is 'published, *i.e.*, accessible to the public.'" (citing *Samsung Elecs. Co. v.*

Samsung Ex. 1098, p. 10
Samsung Electronics Co., Ltd. v. Netlist, Inc., IPR2023-00455

Infobridge Pte. Ltd., 929 F. 3d 1363, 1368, 1370 (Fed. Cir. 2019)). Patent Owner further contends that Petitioner cites no authority for its "attempt[] to invoke Martin's April 16, 2003 filing date as its effective prior art date" under § 102(e). *Id.* at 20.

Petitioner counters that "Martin qualifies as a 'patent[] and printed publication[] under § 311(b) *at least* because it is 'an application for patent, published under section 122(b), by another ***filed*** in the United States before the invention by the applicant for patent' according to § 102(e)(1)." Pet. Reply 32–33. Petitioner further contends that "[t]he well-established AIA-framework permits the use of §102(e) prior art in IPR proceedings." *Id.* at 33 (citations omitted). Petitioner further contends that Patent Owner's cited cases under § 102(a) are inapt. *Id.* (citing PO Resp. 33).

We agree with Petitioner.

The statute governing the formerly available CBM proceeding explicitly limits challenges based on "prior art that is described by section 102(a)." AIA § 18(a)(1)(C). In contrast, § 311(b) permits challenges "on the basis of prior art consisting of patents or printed publications." The language in § 311(b) implies that, unlike CBMs, IPRs are not limited to prior art challenges solely under § 102(a). Patent Owner relies, *inter alia*, on *Infobridge*, but that case deals with public accessibility under § 102(b). *Infobridge*, 929 F. 3d at 1368–69.

The parties do not cite to any Federal Circuit decisions that squarely address this issue. However, the Federal Circuit applied § 102(e) patent application publication prior art in an appeal from an IPR. *See, e.g., Purdue Pharma L.P. v. Iancu*, 767 Fed. App'x 918, 920–21, 926 (Fed. Cir. 2019)

Samsung Ex. 1098, p. 11
Samsung Electronics Co., Ltd. v. Netlist, Inc., IPR2023-00455

(nonprecedential) (determining that a § 102(e) patent application publication, "Joshi", was available as prior art in an IPR).

The Board has also instituted trials and determined claims to be unpatentable based on patent application publications under § 102(e). *See, e.g., Patent Qual. Assurance, LLC v. VLSI Tech. LLC*, IPR2021-01229, Paper 129 at 27–29 (PTAB June 13, 2023) (determining challenged claims unpatentable based, in part, on patent application publication available as prior art under § 102(e)); *Idle Free Sys., Inc. v. Bergstrom, Inc.*, IPR2012-00027, Paper 14 at 27 (PTAB Jan. 31, 2013) (instituting trial on § 102(e) ground based on a patent application publication). Although not precedential, these decisions are persuasive.

For the foregoing reasons, we find Patent Owner's argument that Martin is not available as prior art in this proceeding unavailing.

E. Ground 1: Obviousness over Nerone and Martin

Petitioner contends that claims 7, 9, and 11 are unpatentable over Nerone and Martin. Pet. 9–32. In support thereof, Petitioner identifies the disclosures in Nerone and Martin alleged to describe the subject matter in these claims. *Id.* Additionally, Petitioner cites to the declaration of Dr. Baker in support of the Petition. Ex. 1002 ¶¶ 104–144.

Patent Owner contends that the prior art does not teach certain limitations of claim 7. PO Resp. 21. In particular, Patent Owner contends that the combination does not disclose "an LED circuit array comprising an LED circuit comprising a plurality of LEDs connected in series" and "a forward voltage of the LEDs of the LED circuit array matches the rectified input AC voltage output of the driver.'" *Id.*

We begin our analysis with a brief overview of Nerone and Martin. We then address the parties' respective contentions with respect to claims 7, 9, and 11.

1. Nerone – Ex. 1032

Nerone is titled Light Emitting Diode Power Supply. Ex. 1032, code (54). Nerone discloses "a power supply circuit for operating a light source, particularly, an array of light emitting diodes (LEDs)." *Id.* at 1:5–9. Figure 4 of Nerone is reproduced below:

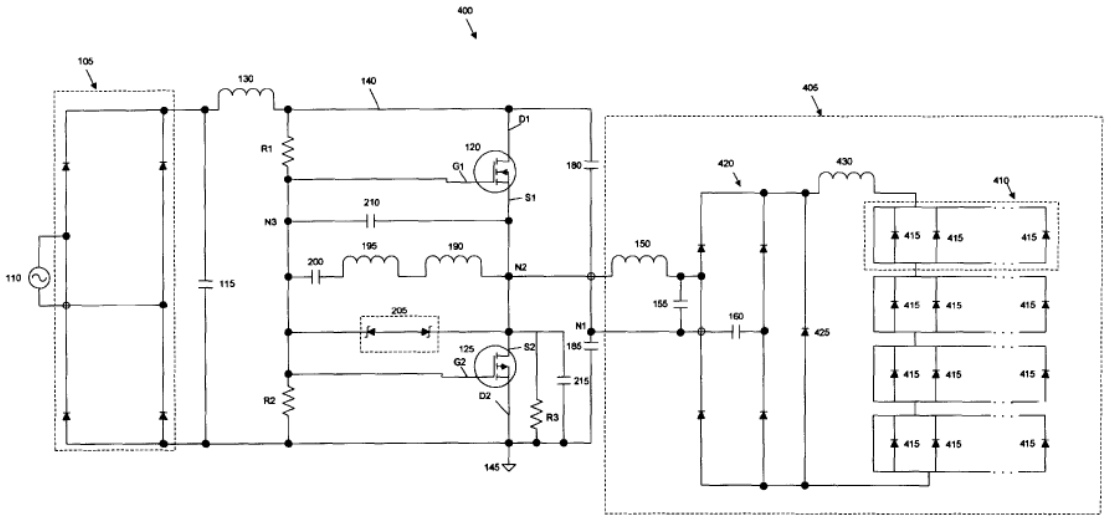

FIG. 4

Figure 4 is a schematic diagram of a power supply circuit 400 for an LED traffic signal. *Id.* at 2:56–57, 5:51–52.

Power supply circuit 400 includes resonant load circuit 405 having resonant inductor 150, resonant capacitor 155, and matching capacitor 160. Ex. 1032, 5:51–57. Resonant circuit 405 "further includes at least one group 410 of LEDs 415 connected in parallel and polarized in the same direction. The groups 410 of LEDs 415 are connected in series." *Id.* at 5:57–60. Nerone explains that "[a] first rectification means or full-wave bridge

rectifier 105 coupled to an AC source 110 converts an AC current to DC current. A smoothing capacitor 115, connected in parallel to the bridge rectifier 105 maintains an average voltage level." *Id.* at 2:65–3:2.

Nerone discloses that "second bridge rectifier 420, which is coupled in parallel to the resonant capacitor 155, re-converts the AC current to DC current." Ex. 1032, 5:65–67. Nerone explains that "diode 425 is connected in parallel to the second bridge rectifier 420" and "allows current to flow continuously through the current limiting inductance 430, which limits the current supplied to the LEDs." *Id.* at 6:3–6.

2. Martin – Ex. 1015

Martin describes LEDs formed on a single substrate connected in series for use with an AC source. Ex. 1015, code (57). Figure 5 of Martin is reproduced below:

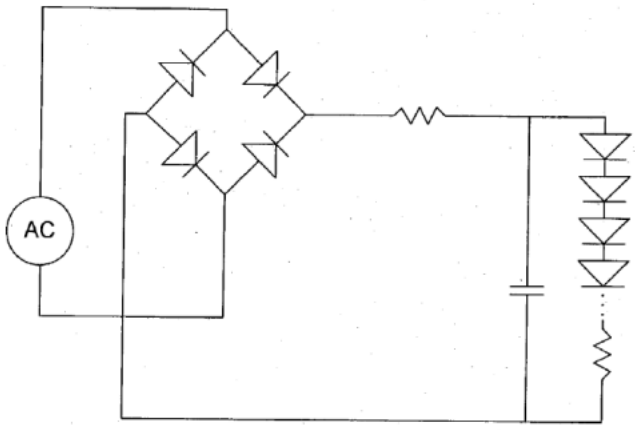

Fig. 5

Figure 5 depicts an LED array and full bridge rectifier for rectifying the AC source. *Id.* ¶ 24.

The full bridge rectifier of Figure 5 can be an external component or integrated into a submount. Ex. 1015 ¶ 24. A capacitor filters the rectified voltage to provide nearly direct current to an LED array. *Id.*

According to Martin, "[e]xcessive forward voltage can damage the LEDs irreversibly." Ex. 1015 ¶ 21. Martin explains that "[s]eries interconnection reduces the voltage drop across each LED to a level that does not exceed the maximum forward voltage of each LED." *Id.* In this manner, "[t]he number of LEDs in the monolithic array may be selected to achieve a particular voltage drop across each device . . . such that the maximum voltage across each individual LED during the peak in the alternating current cycle is low enough so as to not damage the LEDs." *Id.* ¶ 22.

3. Claim 7

[a] A lighting system comprising:

Petitioner contends that, to the extent the preamble is limiting, Nerone discloses "a lighting system." Pet. 9–10 (citing Ex. 1032, 1:6–9, 2:57–59, 5:51–60, 6:9–11, Fig. 4; Ex. 1002 ¶¶ 59–62, 104–107).

Patent Owner does not address Petitioner's contentions or whether the preamble is limiting. *See* PO Resp. 21–43.

We have reviewed the evidence cited by Petitioner and find that Nerone discloses the subject matter of the preamble. Neither party contends that the preamble is limiting so we need not decide whether it is limiting.

[b] an LED circuit array comprising an LED circuit comprising a plurality of LEDs connected in series;

Petitioner contends that Nerone's "circuit 400 ('lighting system') comprises an LED circuit array comprising a plurality of LEDs connected in series." Pet. 11 (citing Ex. 1002 ¶ 108; Ex. 1031, Fig. 4). Petitioner provides the following annotated version of Nerone's Figure 4 (*id.*):

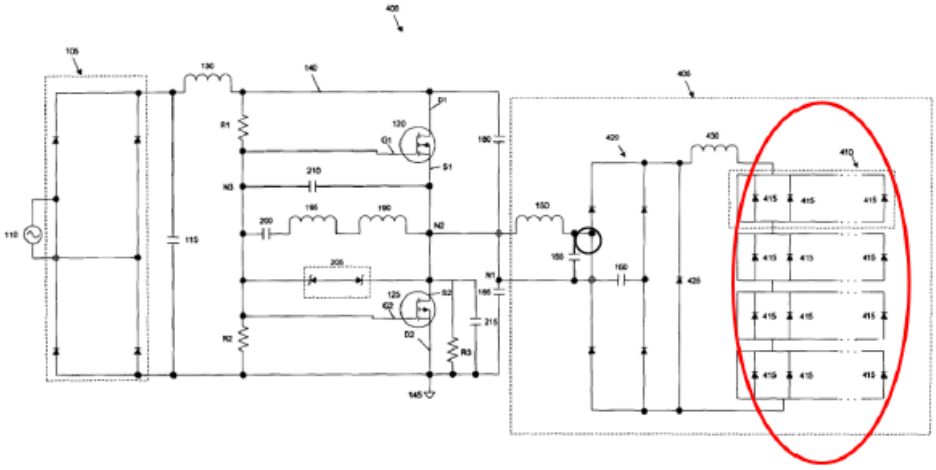

FIG. 4

Figure 4 of Nerone "is a schematic diagram of . . . [a] preferred embodiment of a power supply circuit." Ex. 1032, 2:57–58. In this annotated version of Figure 4 of Nerone, Petitioner adds a red ellipse around LED group 410 on the right side of Figure 4. *Id.*

Petitioner contends Nerone discloses "that its LEDs circuit array [annotated in red] comprises an LED circuit (*i.e.*, groups 410) comprising a plurality of LEDs [415] connected in series." Pet. 11–12 (citing Ex. 1002 ¶ 109); *see also id.* ("Nerone discloses that . . . '[t]he groups 410 of the LEDs 415 are connected in series.'" (citing Ex. 1032, 5:57–60)). Petitioner further contends that "[t]he arrangement of LEDs annotated in red above in Figure 4 of *Nerone* is an *LED circuit array*, *e.g.*, because *Nerone* explains that '[t]he present invention provides a more cost efficient electrical circuit for supplying power to an LED array.'" *Id.* (citing Ex. 1002 ¶ 110; Ex. 1032, 2:15–16).

Patent Owner provides the following annotated partial view of Figure 4 of Nerone:

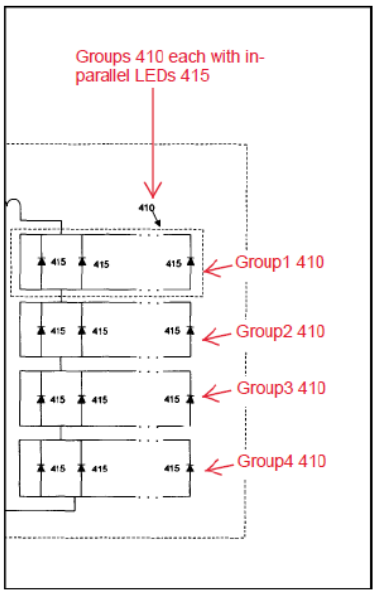

PO Resp. 23. In this diagram, Patent Owner provides the right-hand side of Figure 4 with red annotations identifying various groups of LEDs. *Id.* Patent Owner contends that "[i]t is unclear whether the Petitioner is asserting that (1) each of the LED **groups** is in series, (2) the individual LEDs within a single group 410 are in series, or (3) the individual LEDs between the groups . . . are in series." *Id.* at 22–23 (citing Ex. 1032, Fig. 4; Ex. 2001 ¶¶ 76–77).

Patent Owner contends that a person of ordinary skill in the art would have understood "that the 'plurality of LEDs connected in series' in limitation 7(b) refers to **individual LEDs** connected in series, not individual groups or circuits of LEDs being in series." PO Resp. 24 (citing Ex. 1001, claim 7). Patent Owner further contends that "[t]he claim could have recited 'a plurality of LED <u>circuits</u> connected in series' but it does not." *Id.* According to Patent Owner, "[w]hen the inventor wanted to claim <u>circuits</u> being connected in series or parallel, the claim expressly sets that forth, such as in limitation 14(b)." *Id.* (citing Ex. 1001, 28:15–16; Ex. 2001 ¶ 78).

Patent Owner next contends that a person of ordinary skill in the art "would understand that Nerone's groups 1-4 of LEDs 415 are not a 'plurality of LEDs connected in series.'" PO Resp. 24. In support of this contention, Patent Owner provides the following drawing:

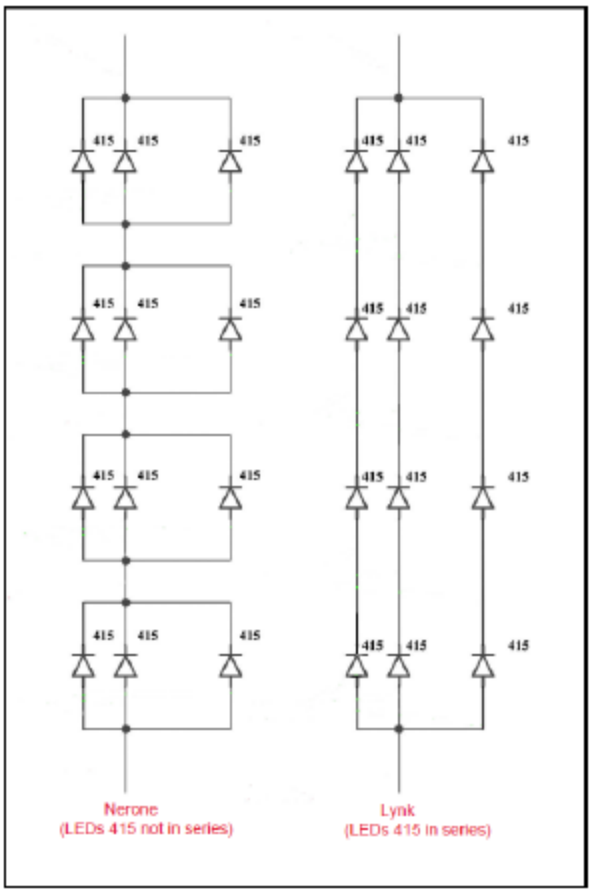

Id. In this diagram, Patent Owner provides two schematic diagrams inside a black box. *Id.* On the left side of the box, Patent Owner provides an excerpt from Figure 4 of Nerone with a red annotation "Nerone (LEDs 415 not in series)." *Id.* On the right side of the box, Patent Owner "depicts how the LEDs 415 of Nerone could have been configured (but were not) to be in series" with a red annotation "Lynk (LEDs 415 in series)." *Id.* at 23–24 (citing Ex. 2001 ¶ 79).

Patent Owner contends that "[e]ach of the **groups** 1-4 from Nerone is a circuit that is in series with the other groups. However, none of the individual LEDs 415 are connected in series with any other LEDs." PO Resp. 26 (citing Ex. 2001 ¶ 80). Patent Owner contends that "Nerone confirms that each of the four groups 410 is in series, but the LEDs within the groups are not in series with LEDs within other groups." *Id.* (citing Ex. 1032, 5:57–60). Patent Owner further contends that Figure 4 of Nerone confirms that there is "not one group that has any LED 415 connected in series to another LED within the group, nor is there any disclosure of an LED 415 in one group connected in series to an LED within another group." *Id.* (citing Ex. 2001 ¶ 81).

Patent Owner next contends that "[t]he defining characteristic of a series circuit is that all components in the series circuit have the same current flowing through them." PO Resp. 27 (citing Ex. 2007, 4). According to Patent Owner, "[t]he corollary is that if two components in a circuit can carry different currents, then those components cannot be in series." *Id.* (citing Ex. 2001 ¶ 83). Based on this, Patent Owner argues that "individual LEDs 415 in groups 1-4 are not connected in series." *Id.*; *see also id.* at 27–30 (arguing why LEDs in Nerone are allegedly not connected in series for the same reason); Sur-reply 3 (arguing that limitation 7(b) "refers to multiple LEDs having the same current path that carry the same current.").

Patent Owner next contends that "the LEDs between the groups cannot be in series" because manufacturing tolerances may result in the LEDs 415 drawing different current. PO Resp. 29 (citing Ex. 2001 ¶ 86). Patent Owner contends that "an LED rated at 10 mA for a given forward

voltage may draw a little more or a little less, such as 10.0001 mA or 9.999 mA. *Id.*

Petitioner, in turn, reiterates its position from the Petition that Nerone discloses that its "**groups 410 of the LEDs 415 are connected in series**." Pet. Reply 1 (citing Pet. 11–12). Petitioner contends that Patent Owner's expert concedes, that, while LEDs *within* each group may be connected in parallel, the groups of *LEDs* are connected *in series*." *Id.* (citing Ex. 2001 ¶¶ 81–82).

Petitioner next contends that "nothing in independent claim 14 (or other claims) implies that claim 7 excludes LEDs from parallel-connection to other LEDs." Pet. Reply 2. Petitioner contends that Patent Owner "improperly imports a limitation into claim 7 and is inconsistent with the '400 patent." *Id.* at 3 (citing Ex. 1001, Figs. 6–8, 14, 21, 24; Ex. 1003 ¶¶ 3–16). Petitioner points to Figure 14 of the '400 patent as "depict[ing] 'a light emitting device 152 [including] a ***series*** opposing ***parallel*** LED matrix 154 and a capacitor 156 ***connected in series***.'" *Id.* (citing Ex. 1001, 15:56–64, Fig. 14). Petitioner further contends that "matrix 154 . . . is described as including a '**series string of LEDs**' . . . while each LED in a series string is also connected in parallel *to other* LEDs." *Id.* (citing Ex. 1001, 1:64–16:1). Petitioner further contends that the series opposing parallel array of Figure 14 "is similar to the LED circuit array of Nerone."

Petitioner provides the following annotated comparison of Figure 14 in the '400 patent with Patent Owner's partial annotated view of Nerone's Figure 4:

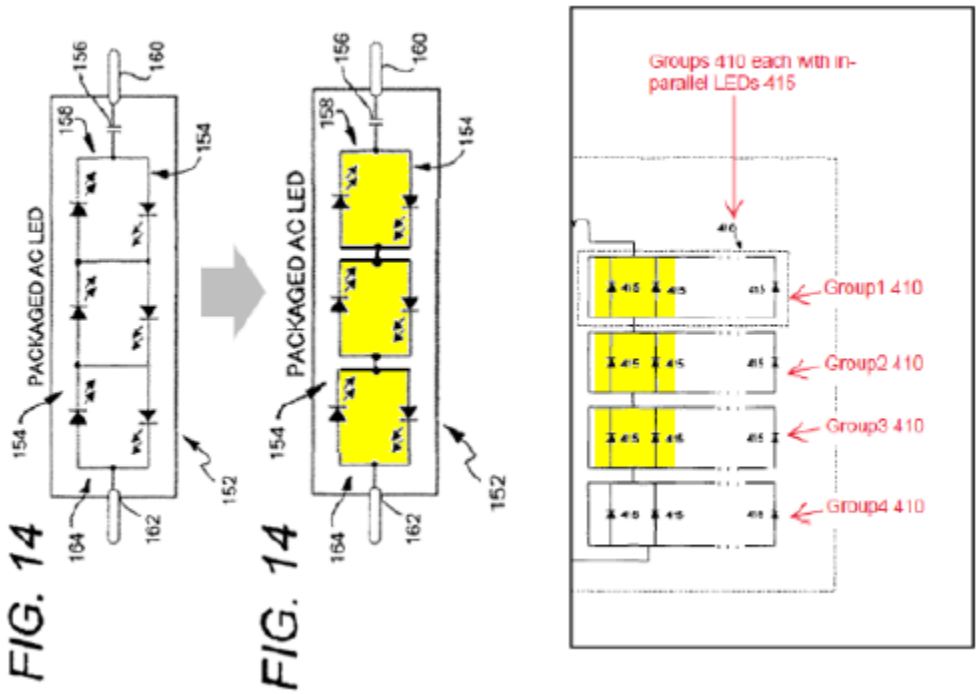

Id. at 4. This drawing shows Figure 14 rotated counterclockwise with yellow highlighting of certain nodes and Patent Owner's partial annotated view of Figure 4 also with yellow highlighting of certain nodes. *Id.* (citing PO Resp. 23; Ex. 1001, Fig. 14; Ex. 1107 ¶¶ 14–15). Petitioner contends the highlighted nodes shown in Figure 4 of Nerone are "functionally identical" to the highlighted nodes in Figure 14 of the '400 patent. *Id.* at 3. Petitioner further contends that Patent Owner "conceded that *Nerone's* groups containing LEDs are connected in series *within an LED circuit* (POR, 24) which necessarily means that the LEDs of each group are 'connected in series' with the LEDs *of the other groups*." *Id.* at 4 (citing Ex. 1107 ¶¶ 10–13).

Petitioner next contends that Patent Owner's "reliance on 'manufacturing tolerances' is misplaced." Pet. Reply 10 (citing PO Resp. 29–30). Petitioner argues that Patent Owner "presents no evidence that a [person of ordinary skill in the art] would have considered 'manufacturing

tolerances' relevant to" whether LEDs are connected in series or parallel. *Id.* (citing Ex. 2001 ¶ 86). Petitioner further contends that "[w]hatever miniscule differences might exist they would apply equally to LEDs connected in series regardless of other parallel connections and thus have no bearing on limitation 7(b)." *Id.* (citing Ex. 1107 ¶¶ 25–26).

For the following reasons, we are persuaded that Nerone discloses this limitation.

As discussed above, Petitioner contends that Nerone's "LED circuit array . . . comprises an LED circuit, (*i.e.* groups 410) comprising a plurality of LEDs connected in series." Pet. 11 (citing Ex. 1032, Fig. 4). Patent Owner does not dispute Petitioner's contentions concerning Nerone's teaching of an LED circuit array and an LED circuit. *Compare* Pet. 11, *with* PO Resp. 21–30. But, Patent Owner contends that Petitioner's mapping of Nerone to this claim limitation is unclear. PO Resp. 22–23. We disagree because the Petition states that Nerone's "**groups 410 of the LEDs 415 are connected in series**." Pet. 11–12 (citing Ex. 1032, 5:57–60); Pet Reply 1 (citing Pet. 11–12). Patent Owner admits that "Nerone confirms that each of the four groups 410 is in series." PO Resp. 26; *see also* Ex. 2001 ¶ 81 (Dr. Ducharme testifying that "each of four groups 410 is in series."). Consequently, because there is no dispute that groups 410 are in series, the question we must resolve is whether Nerone's groups 410 meet the requirement of "a plurality of LEDs connected in series" as recited in limitation 7(b).

Patent Owner's contentions are largely based on rewriting this limitation. Patent Owner argues that a person of ordinary skill in the art "would understand that the 'plurality of LEDs connected in series' in

limitation 7(b) refers to **individual LEDs** connected in series." PO Resp. 24; *see also* Sur-reply 2 ("at least two **LEDs** are connected in series"). But, limitation 7(b) does not recite "individual LEDs connected in series." Dr. Ducharme repeats verbatim the Patent Owner's arguments concerning the meaning of limitation 7(b). Ex. 2001 ¶ 78. Dr. Baker counters that a person of ordinary skill would have understood the "meaning of limitation 7(b) . . . to encompass an LED circuit array that includes at least one LED circuit that includes two or more LEDs that are connected in series . . . but not exclude that the 'LED circuit' can have other LED(s) connected in parallel." Ex. 1107 ¶ 4. For the reasons explained below, we credit Dr. Baker's testimony over that of Dr. Ducharme because it is more consistent with the claim language.

Limitation 7(b) recites, in its entirety, "an LED circuit array comprising an LED circuit comprising a plurality of LEDs connected in series." Ex. 1001, 27:49–50. Although two or more individual LEDs connected in series could satisfy this limitation, the scope is broader than Patent Owner contends because the plurality of LEDs connected in series are part of an LED circuit that is part of an LED circuit array. Patent Owner's reference to claim 14 (PO Resp. 24) does not support its reading of claim 7. Claim 14 recites "LED circuits connected in parallel, wherein each LED circuit comprises at least two LEDs." This language sheds little, if any, light on the meaning of "a plurality of LEDs connected in series." To the extent that Patent Owner's contentions for this limitation are based on limiting the scope of limitation 7(b) to individual LEDs connected in series, those contentions are unavailing.

To be clear, we find that Nerone discloses that resonant load circuit 405 "includes at least one group 410 of LEDs 415 connected in parallel and polarized in the same direction" and "groups 410 of the LEDs 415 *are connected in series*." Ex. 1032, 5:58–60 (emphasis added).

Patent Owner's analysis ignores Petitioner's contention that Nerone's LED circuit comprises "groups 410." Pet. 11. Rather, Patent Owner applies its narrow construction within individual groups 410. For example, Patent Owner argues that "individual LEDs 415 in groups 1-4 are not connected in series" and, that if one LED in a group fails, then current will still flow through the remaining LEDs in the group. According to Patent Owner, this means the LEDs within the group are *not* in series. PO Resp. 27–29. However, this is where Patent Owner's argument about current flow through series connected LEDs fails. We agree with Petitioner and Dr. Baker, that in the case of a failure of one LED in one of Nerone's groups 415, current still flows "because *the group includes* parallel connected LEDs—not because the LEDs *between* the groups are not connected in series. Pet. Reply 7 (citing Ex. 1107 ¶¶ 12, 20). The fact that individual LEDs in any group 415 are not connected in series is not dispositive. Limitation 7(b) requires "an LED circuit comprising a plurality of LEDs connected in series." Ex. 1001, 27:49–50. We find that any two adjacent groups 410, which are part of the LED circuit in Nerone, correspond, to "a plurality of LEDs connected in series."

With respect to Patent Owner's manufacturing tolerance issue, Patent Owner relies on Dr. Ducharme's testimony. Dr. Ducharme testifies that a person of ordinary skill in the art would have known of manufacturing tolerances, but he does not testify that the ordinary skilled artisan would

understand that manufacturing tolerances affect whether LEDs are connected in series. Ex. 2001 ¶ 86. In point of fact, Dr. Baker testifies that "a person of ordinary skill in the art would not have attributed such characteristics [manufacturing tolerances] to understanding whether *Nerone*'s array includes LEDs connected in series, or whether in general, LEDs are connected in series or parallel." Ex. 1107 ¶ 25. Based on Dr. Baker's testimony, which we credit, any manufacturing tolerances of the LEDs in Nerone's groups 410 have no bearing on whether groups 410 are connected in series.

After reviewing Petitioner's contentions and the evidence in the record and Patent Owner's contentions, we find that Nerone discloses this limitation.

[c] a capacitor

Petitioner contends that "Nerone discloses that circuit 400 ('lighting system') includes capacitors 115, 155, 160, 185, 200, 210, and 215 (red below), any of which is 'a capacitor.'" Pet. 12–13 (citing Ex. 1032, Fig. 4; Ex. 1002 ¶ 111). Petitioner provides the following annotated version of Nerone's Figure 4 in support of this contention (*id.* at 13):

Samsung Ex. 1098, p. 25
Samsung Electronics Co., Ltd. v. Netlist, Inc., IPR2023-00455

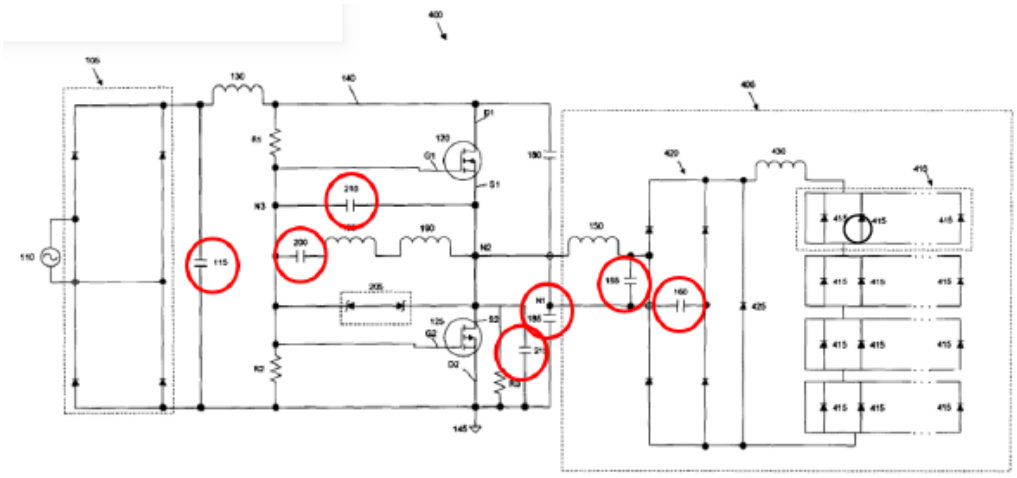

FIG. 4

In this annotated version of Nerone's Figure 4, Petitioner adds red circles around item numbers 115, 155, 160, 185, 200, 210, and 215 that it contends are capacitors.

Patent Owner does not address Petitioner's contentions. *See* PO Resp. 21–43.

Based on our review of the evidence cited by Petitioner, we find that Nerone discloses this limitation.

> *[d] a bridge rectifier configured to receive an input AC voltage from a mains power source;*

Petitioner contends that "Nerone in view of the state of the art discloses or suggests this limitation." Pet. 13 (citing Ex. 1002 ¶¶ 112–115). Petitioner contends Nerone discloses circuit 400 comprises bridge rectifier 105 configured to receive an input AC voltage. *Id.* (citing Ex. 1002 ¶ 112). In support of this contention, Petitioner provides the following annotated version of Nerone's Figure 4 (*id.* at 14):

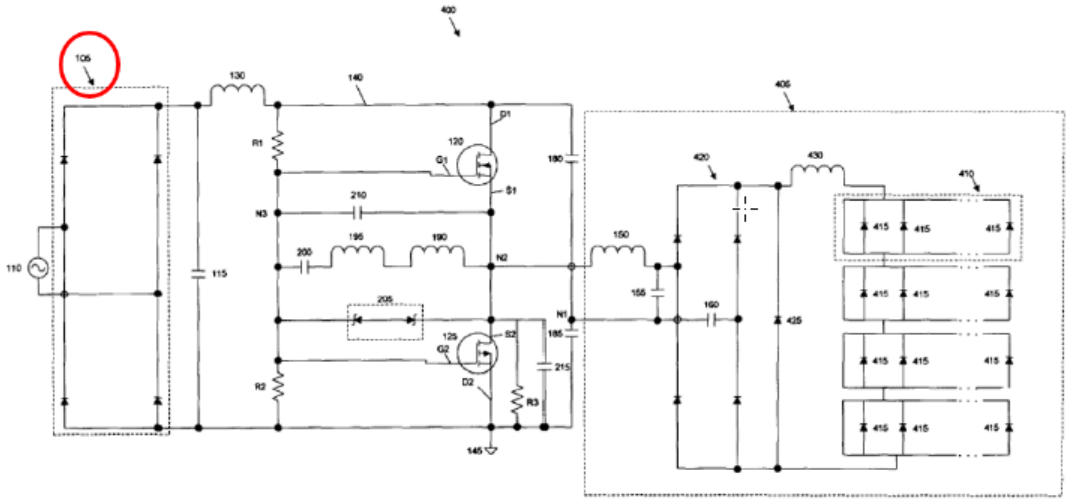

FIG. 4

In this annotated version of Figure 4, Petitioner adds a red circle around item number 105 in the upper left-hand corner which it contends is bridge rectifier 105. *Id.*

Petitioner contends that Nerone's bridge rectifier 105 is configured to receive an input AC voltage from AC source 110. Pet. 14 (citing Ex. 1002 ¶ 113; Ex. 1032, 2:65–67). Petitioner asserts that because Nerone's lamps "operate with a 120 volt 60 Hz AC power supply[] . . . [a skilled artisan] would have known that an AC voltage of 120 V (*i.e.*, 120 VAC) was commonly available from a mains power source." *Id.* at 15 (citing Ex. 1002 ¶ 114; Ex. 1032, 1:51–56; Ex. 1027, 1:8–12, 1:18–27; Ex. 1045, 1:20). According to Petitioner, a skilled artisan "would have been motivated and found it obvious to configure *Nerone's* bridge rectifier 105 to receive its input AC voltage from a *mains* power source." *Id.* (citing Ex. 1002 ¶ 115).

Patent Owner does not address Petitioner's contentions. *See* PO Resp. 21–43.

Based on our review of the evidence cited by Petitioner, we find that Nerone suggests this limitation.

> *[e] a driver connected to the bridge rectifier and configured to provide a rectified output AC voltage to the LED circuit array;*

Petitioner contends that "Nerone discloses a driver . . . connected to bridge rectifier 105 ('the bridge rectifier') and configured to provide a rectified output AC voltage to the LED circuit array." Pet. 16 (citing Ex. 1032, Fig. 4; Ex. 1002 ¶ 116). In support of this contention, Petitioner provides the following annotated version of Nerone's Figure 4 (*id.*):

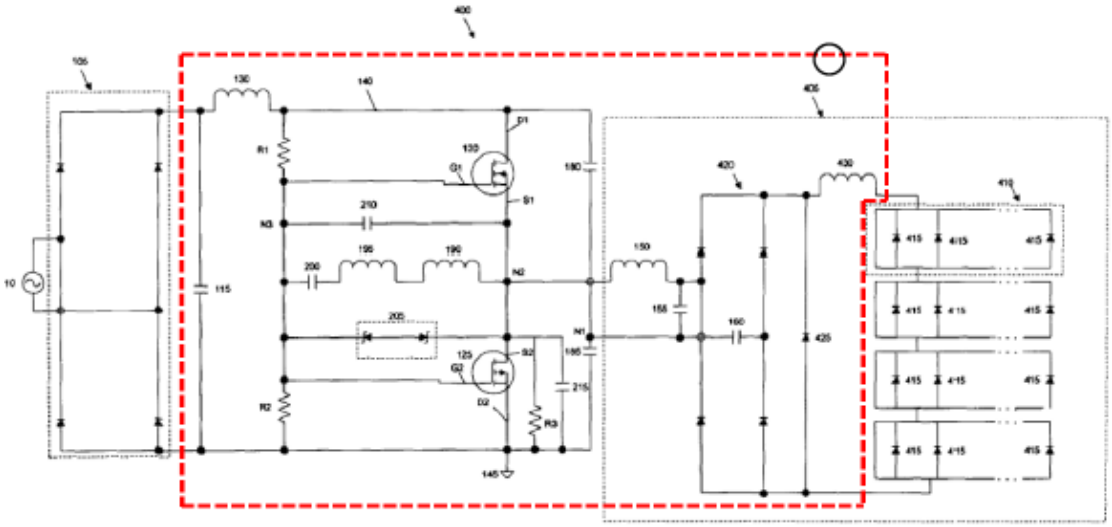

FIG. 4

In this annotated version of Figure 4, Petitioner provides a red rectangle drawn with broken lines around the items it contends correspond to the recited driver. *Id.* Petitioner contends that "[t]he circuitry annotated in red . . . is a *driver*, *e.g.*, because it drives current and power to the LED circuit array." *Id.* (citing Ex. 1002 ¶ 117). According to Petitioner, "the bridge rectifie[r] allows both halves of the input AC voltage waveform to pass

through the lamp in the same current direction . . ., thus producing a rectified AC voltage waveform output." *Id.* at 17 (citing Ex. 1002 ¶ 117).

Patent Owner does not address Petitioner's contentions. *See* PO Resp. 21–43.

Based on our review of the evidence cited by Petitioner, we find that Nerone discloses this limitation.

> *[f] wherein a forward voltage of the LEDs of the LED circuit array matches the rectified input AC voltage output of the driver; and*

Petitioner contends that to the extent Nerone does not disclose that the forward voltage of the LEDs matches the rectified input AC voltage, "it would have been obvious in view of Martin and the state of the art to configure Nerone's circuit 400 ('lighting system') system to provide such features to ensure proper operation of the LED circuitry . . . in circuit 400." Pet. 18–19 (citing Ex. 1002 ¶¶ 63–65, 119–131). Petitioner contends that a person of ordinary skill in the art "would have understood and taken into account the following considerations:

> (a) the total voltage drop of the circuit would dictate the current drawn by the LED circuitry, which would have been known to be inversely proportional to the voltage; (b) fewer LEDs in the design would lead to a larger current compared to a circuit with a greater number of LEDs; (c) excessive current would have been harmful to Nerone's LEDs that could lead to failure; (d) too small a current may be insufficient to power the LEDs in a manner that enabled the lighting device [to] operate as intended.

Id. at 19 (citing Ex. 1002 ¶ 120).

Petitioner further contends that a skilled artisan knowledgeable about typical LED circuit design "would have taken into consideration the number of LEDs and the total voltage drop of the LED circuit when designing and

implementing *Nerone's* circuit 400" and that "matching the input voltage to the forward voltage of the LEDs had become a matter of routine optimization." *Id.* at 19–20 (citing Ex. 1002 ¶¶ 120–121; Ex. 1074 ¶ 30).

Petitioner next contends Martin discloses "that '[e]xcessive forward voltage can damage the LEDs irreversibly' and that '[s]eries interconnection reduces the voltage drop across each LED to a level that does not exceed the maximum forward voltage of each LED.'" Pet. 20 (citing Ex. 1015 ¶ 21). Petitioner further contends Martin is similar to the '400 patent and Nerone because it "relates to monolithic arrays of semiconductor light emitting devices powered by alternating current sources." *Id.* (citing Ex. 1001, codes (12), (57); Ex. 1015 ¶ 2, Fig. 5). Petitioner further contends "*Martin* discloses that '**[t]he number of LEDs in the monolithic array may be selected to achieve a particular voltage drop across each device** . . . such that the maximum voltage across each individual LED during the peak in the alternating current cycle is low enough so as to not damage the LEDs.'" *Id.* (citing Ex. 1015 ¶ 22). Petitioner further contends Martin "explains that '[t]he voltage across each of the individual LEDs in the array is the line voltage divided by the number of LEDs in series.'" *Id.* (citing Ex. 1002 ¶ 123; Ex. 1015 ¶ 22). According to Petitioner, this "applies equally to LEDs powered directly from an alternating current . . . as well as those powered by rectified AC current (where the LEDs are powered on continuously)." *Id.* at 21 (citing Ex. 1002 ¶ 124; Ex. 1015 ¶¶ 23–24, Fig. 5). Based on the teachings of Martin, Petitioner contends a skilled artisan "would have recognized that the forward voltage of [Nerone's] series-connected LEDs should [have] approximately matched the rectified AC

voltage output of the above-described LED driver circuit." *Id.* (citing Ex. 1002 ¶ 124).

Petitioner also contends that combining the teachings of Nerone and Martin "is consistent with the state of the art." Pet. 22 (citing Ex. 1002 ¶ 125). In particular, Petitioner analyzes Allen (Ex. 1011) and Bockle (Ex. 1075) as representative of the state of the art. *Id.* at 22–24. According to Petitioner, based on the alleged knowledge of a skilled artisan and Nerone and Martin, a skilled artisan "would have had the skills and rationale to consider and implement the above modification and would have done so with a reasonable expectation of success." *Id.* at 26 (citing Ex. 1002 ¶ 130).

Patent Owner first contends that Petitioner fails to analyze "what would be the value of the DC output voltage at the inductor 430 of Nerone's Figure 4 based on an input voltage of 120 VAC" and "does not indicate the number of LEDs 415 or the number of groups 410 in Nerone's figure 4 that would be necessary to match the (unspecified) DC voltage ouput." PO Resp. 31–32 (emphasis omitted).

Patent Owner next contends that Martin attempts to avoid damaging LEDs and "proposes a '[s]eries interconnection [that] reduces the voltage drop across each LED to a level that does not exceed the **maximum forward voltage** of each LED. Excessive forward voltage can damage the LEDs irreversibly." PO Resp. 33 (quoting Ex. 1015 ¶ 21). Patent Owner further contends that "[f]or a 120 VAC input, Martin discloses selecting the number of LEDs to be 38 LEDs so that the voltage drop across each LED is less than the 'maximum forward voltage' of 4.5 V at the voltage peak of 169.71 V." *Id.* (citing Ex. 1005 ¶ 21; Ex. 2001 ¶ 92). According to Patent Owner "[t]he claimed voltage-matching provides that the total voltage drop

across the LEDs matches the rectified voltage delivered by the driver" but "Martin . . . is teaching that the voltage across individual LEDs is less than a maximum voltage to *prevent damage* from overdriving LEDs, not matching LED drops to a rectified AC voltage from a driver." *Id.* at 33–34 (citing Ex. 2001 ¶ 93).

Patent Owner next contends that Martin teaches selecting 42 LEDs for a circuit "where each LED operates at its 'forward voltage' of 3.5 V for a total voltage drop of 42 x 3.5 V= 147 V." PO Resp. 34 (citing Ex. 1015 ¶ 22; Ex. 2001 ¶ 94) (footnote omitted). Patent Owner contends that the "147 V drop does not match the rectified AC voltage" because "[a] voltage drop of 147 V is much less than the peak voltage of 169.71 V. A voltage drop of 147 V is much more than the rms voltage of 120 V." *Id.* (citing Ex. 2001 ¶ 95).

Patent Owner next contends that Martin does not meet the recited voltage matching because it "selects the number of LEDs based on an **unrecitifed AC voltage** with a peak of 169.71 V, not based on a **rectified** AC voltage" as recited in limitation 7(f). PO Resp. 35 (citing Ex. 2001 ¶ 96). Patent Owner concedes that Figure 5 of Martin discloses LEDs driven by a rectified AC voltage but contends that the rectified voltage in Figure 5 would be 168.31 V. *Id.* at 35–36 (citing Ex. 1015, Fig. 5; Ex. 2001 ¶ 97). According to Patent Owner, Martin does not "teach selecting the number of LEDs based on a rectified AC voltage of 168.31 V." *Id.* (citing Ex. 1015 ¶ 24, Fig. 5; Ex. 2001 ¶ 98).

Patent Owner next contends that the circuit in Nerone's Figure 4, "delivers a fixed DC voltage (rectified AC voltage) to LED groups 410 using a second full wave bridge rectifier 420 and current limiting conductor

430" switches 420/425 and the resonant load circuit 405 regulate the amount of voltage and current delivered to the LED groups 410." PO Resp. 36–37. According to Patent Owner, based on this, "there is no need to select the number of LEDs in groups 410 to match their total forward voltage drop to the DC voltage at inductor 430." *Id.* at 37.

Patent Owner next contends that Petitioner "cites to four inappropriate extraneous references not part of Ground 1." PO Resp. 38 (citing Pet. 20, 23–25; Ex. 1012 ¶¶ 121, 125–127, 129; Ex. 1011 ("Allen"); Ex. 1014 ("Birrell"); Ex. 1074 ("Cross"); Ex. 1075 ("Bockle")). Patent Owner further contends that "Petitioner defined its ground based on Nerone and Martin and should not be permitted to modify or effectively create a new ground that includes these four additional references." *Id.* at 38–39.

Patent Owner does not dispute Petitioner's contentions concerning reasonable expectation of success. *Compare* Pet. 26, *with* PO Resp. 30–43.

Petitioner, in turn, contends that Patent Owner "does not dispute, or proffer any refuting evidence concerning, the Petition's analysis and supporting evidence . . . that the 'matches' requirement was an *obvious matter of routine configuration/optimization* in the art." Pet. Reply 12 (citing Pet. 19–20, Ex. 1002 ¶¶ 120–12, Ex. 1074 ¶ 30.

Petitioner contends that the obviousness analysis does not require Petitioner to provide "some *specific number* of LEDs and output voltage for the modified *Nerone* system." Pet. Reply 13 (citing *KSR).* Petitioner further contends the number of LEDs "would have depended on the *particular* output voltage, LEDs, and application" and "[a]s a matter of routine skill, the precise number of LEDs would have been optimized for the chosen

application to avoid, *e.g.*, overdriving." *Id.* (citing Ex. 1002 ¶¶ 41–43, 63–65, 119–131; Ex. 1107 ¶¶ 28–29).

Petitioner next contends that Patent Owner "avoids defining 'matches' or comparing the '400 patent, including its description of 'matched' forward voltage from [Ex. 1011]." Pet. Reply 13–14. Petitioner cites to the '400 patent's description of Allen's voltage matching requirement as "the peak input voltage must be less than or equal to the sum of the maximum forward voltages . . . in order to prevent over-driving." *Id.* at 14 (citing Ex. 1001, 2:27–35). Petitioner further contends that Dr. Ducharme testified "that 'matches' requires ***exactly equal*** output voltage and total voltage drop of the LEDs" which according to Petitioner is "inconsistent with the '400 patent's description of 'match' as a '**less than or equal to**' condition." *Id.* at 14–15 (citing Ex. 1001, 2:27–35; Ex. 1106, 23:25–25:9; Ex. 1107 ¶¶ 27–28). Petitioner further contends that "the '400 patent describes using matching to prevent overdriving which is the same as Martin's reason for matching. *Id.* at 15 (citing Ex. 1001, 2:27–35, 3:11–33, 8:16–46, 16:64–17:7).

Petitioner next contends that Patent Owner's attempt to distinguish Martin because Figure 4 supplies an AC voltage not a rectified AC voltage is unavailing. Pet. Reply 15 (citing PO Resp. 35). Petitioner further contends that Patent Owner "fails to show any impact these examples had on a [person of ordinary skill in the art]'s ability or desire to 'match the output voltage" but, in any event, according to Petitioner, Martin "exemplifies driving with a rectified AC voltage." *Id.* (citing Pet. 20–21; Ex. 1015 ¶¶ 23–25, Fig. 5; Ex. 1011 ¶¶ 41–43; Ex. 1074 ¶ 30; Ex. 1107 ¶¶ 29–30).

Petitioner further contends that Cross, Allen, Bockle, and Birrell were cited to corroborate Dr. Baker's testimony concerning the knowledge of a

person of ordinary skill in the art as "to matching." Pet. Reply 18 (citing Pet. 19–26; Ex. 1002 ¶¶ 36, 40–44, 65, 119–131). Petitioner further contends that it is not using these references for "gap-filling" or combining any of Cross, Allen, Bockle, or Birrell with Nerone or Martin. *Id.* (citing Pet. 18–27).

In the Sur-reply, Patent Owner contends Petitioner statement in the Reply that the number of LEDs in the modified Nerone system is a matter of routine skill in the art based on various factors is "vague and conclusory" and "does not remotely establish that Nerone/Martin meets limitation 7(f)." Sur-reply 12–13.

Patent Owner next contends that it did not overlook "the example in Martin's paragraph [0022] where the 38 LEDs are connected in series." Sur-reply 13 (citing PO Resp. 33–34; Ex. 2001 ¶ 93). Patent Owner further contends that "[t]his example is distinguishable because the selection of LEDs is based on a direct drive AC input voltage, not the 'rectified [] AC voltage output of the driver' per limitation 7(f)" and "because the LEDs are selected based on the LEDs **maximum forward voltage**, not based on their forward voltage, as a [person of ordinary skill in the art] would understand for limitation 7(f)." *Id.* (citing Ex.1015 ¶22).

For the following reasons, Petitioner persuades us that the combined teachings of Nerone and Martin suggest this limitation.

Patent Owner's contentions are based on the premise that "matches means an equivalence within a manufacturing tolerance." Tr. 32:18–21; *see also* PO Resp. 33–34 ("Martin . . . is teaching that the voltage across individual LEDs is less than a maximum voltage to *prevent damage* from overdriving LEDs, not matching LED drops to a rectified AC voltage from a

driver." (citing Ex. 2001 ¶ 93)). The '400 patent describes "for the forward voltage to be 'matched,' in each series block, the peak input voltage must be *less than or equal to* the sum of the maximum forward voltages for each series block in order to prevent over-driving." Ex. 1001, 2:32–35 (emphasis added); *id.* at 9:49–51 ("opposing parallel series strings of LEDs connected together and driven direct with a high frequency AC voltage equal to or less than the total series voltage drop of the opposing parallel strings of LEDs."); *id.* at 16:64–17:7 ("in a lighting device that is run off 120 V source and contains LEDs having a forward operating voltage of 3V each connected to a bridge rectifier . . . approximately 38 LEDs may be placed in series to drop the required voltage."). While matching based on "an equivalence within a manufacturing tolerance" falls within the scope of limitation 7(b), the '400 patent's description of "matches" is broader than "equivalence." It also encompasses "the rectified input AC voltage output of the driver" that is less than "a forward voltage of the LEDs of the LED circuit." *See* Ex. 1001, 2:32–35. Consequently, Patent Owner's contentions that "Martin . . . is teaching that the voltage across individual LEDs is less than a maximum voltage . . . not matching" (PO Resp. 33–34), and the "voltage drop of 147 V is much less than the peak voltage" (PO Resp. 34) are unavailing.

We also do not agree with Patent Owner that Petitioner is required to provide a specific numerical analysis of the number of LEDs necessary to match a value of the DC output voltage in Nerone. PO Resp. 31–32. Based on Dr. Baker's testimony, Petitioner provides several factors that a person of ordinary skill in the art would have considered when designing Nerone's circuitry to satisfy the "matching" requirement of limitation 7(f). Pet. 18 (citing Ex. 1002 ¶ 120). Dr. Baker supports his testimony concerning the

Samsung Ex. 1098, p. 36
Samsung Electronics Co., Ltd. v. Netlist, Inc., IPR2023-00455

knowledge of these factors by one of ordinary skill with reference to disclosures in Cross and Martin. Ex. 1002 ¶¶ 121–123. Neither Patent Owner nor Dr. Ducharme dispute that a person of ordinary skill in the art would have known to consider these factors when designing Nerone's circuit. *See* PO Resp. 30–43; Ex. 2001 ¶¶ 89–106. Petitioner then explains how a person of ordinary skill in the art would have used these factors to apply the teachings of Martin to configure Nerone's circuitry so that "the forward voltage of the series-connected LEDs [] approximately match[es] the rectified AC voltage output of the above-described LED driver circuit." Pet. 21; *id.* at 20–21; *see also* Ex. 1107 ¶ 29 ("a person of ordinary skill in the art would have understood and would have been capable of determining the appropriate number of LEDs based on the application and design of Nerone's system such that the forward voltage drop of the LEDs . . . matches the rectified AC voltage output . . . to mitigate against overdriving or underdriving the LEDs." (citing Ex. 1074 ¶¶ 30–31, Fig. 2)). For these reasons, we find that it was not necessary for Petitioner to provide a specific numerical calculation of the number of LEDs in its proposed modification of Nerone.

We also agree with Petitioner that "matching the input voltage to the forward voltage of the LEDs had become a matter of routine optimization." Pet. 19. Patent Owner contends that this statement is "vague and conclusory." Sur-reply 12–13. Petitioner, however, supports this statement with the testimony of Dr. Baker. Ex. 1002 ¶¶ 120–123. Dr. Baker's testimony, which we credit, is corroborated by both Cross and Martin. *See id.* (citing Ex. 1015 ¶¶ 2, 21, 22 Fig. 5; Ex. 1074 ¶ 30). In particular, Cross specifically discloses that "[t]he number of LEDs employed will vary with

the intended lighting application and the value of the rectified DC voltage, wherein *optimization of such is well within the skill of those in the art*." Ex. 1074 ¶ 30. Patent Owner does not dispute Cross's statement that optimizing the number of LEDs is within the skill of an ordinarily skilled artisan. *See* PO Resp. 40.

Martin chooses the number of LEDs "such that the maximum voltage across each individual LED . . . is low enough so as to not damage the LEDs." Ex. 1015 ¶ 22. It also specifically discloses that "[t]he voltage across each of the individual LEDs in the array is the *line voltage divided by the number of LEDs in series*." *Id.* (emphasis added). Consequently, Martin uses "voltage matching" to determine the number of LEDs so as not to damage the individual LEDs. *See also* Ex. 1002 ¶¶ 120–124 (Dr. Baker explaining that a skilled artisan "configuring *Nerone*'s circuit 400 would have recognized that the forward voltage of the series-connected LEDs should approximately match the rectified AC voltage output of the above-described LED driver circuit." *Id.* ¶ 124.). Martin's disclosure, thus, aligns with the reason for "matching" described in the '400 patent. Ex. 1001, 2:24–35.

We also disagree with Patent Owner that Petitioner is using any of Cross, Allen, Bockle, or Burrell for gap filling. As just discussed, these references are used to corroborate Dr. Baker's testimony concerning the knowledge of a person of ordinary skill in the art, *e.g.*, Cross's disclosure that optimization is within the skill of one of ordinary skill in the art.

We have reviewed Petitioner's contentions and evidence, and after considering all of Patent Owner's contentions, we find that the combined teachings of Nerone and Martin teach or suggest limitation 1(f). Further,

Samsung Ex. 1098, p. 38
Samsung Electronics Co., Ltd. v. Netlist, Inc., IPR2023-00455

Petitioner persuades us that a person of ordinary skill in the art would have been motivated to combine Nerone and Martin and would have had a reasonable expectation of success in doing so. As discussed above, the optimization of LED strings by matching LEDs to input voltage was within the knowledge of one of ordinary skill in the art as evidenced by Martin and corroborated by Cross, and thus, we find that the '400 "patent simply arranges old elements with each element performing the same function it had been known to perform and yields no more than one would expect from such an arrangement [and] the combination is obvious." *KSR* 550 U.S. at 417.

[g] wherein the LED circuit array, the capacitor, the bridge rectifier, and the driver are all mounted on a single substrate.

Petitioner contends that Nerone discloses this limitation because Nerone discloses that "[a]ll of the circuit components may be placed on the same circuit board as the light emitting elements." Pet. 27 (citing Ex. 1032, code (57); *see also* Ex. 1002 ¶¶ 132–134). According to Petitioner, Nerone's broad disclosure applies to each of the embodiments such that Nerone's LED circuit array, various capacitors, bridge rectifier 105, and driver "are all mounted on a single circuit board ('single substrate')." Pet. 28 (citing Ex. 1002 ¶ 133).

Patent Owner does not address Petitioner's contentions. *See* PO Resp. 21–43.

Based on our review of the evidence cited by Petitioner, we find that Nerone discloses this limitation.

Summary of Claim 7

For all the foregoing reasons, we determine Petitioner establishes by a preponderance of the evidence that claim 7 is unpatentable over Nerone and Martin.

Samsung Ex. 1098, p. 39
Samsung Electronics Co., Ltd. v. Netlist, Inc., IPR2023-00455

4. Claim 9

Claim 9 depends from claim 7 and recites "wherein the LEDs are coated or doped with at least one of a phosphor, nanocrystals, or a light changing or enhancing substance." Ex. 1001, 27:65–67.

Petitioner details the disclosure in Martin that it contends corresponds to the limitations in claim 9. Pet. 28–29 (citing Ex. 1002 ¶ 136; Ex. 1015 ¶¶ 5, 27). Petitioner further provides reasons why it would have been obvious to a person of ordinary skill in the art "to coat the LEDs of *Nerone*'s system with a phosphor or wavelength converting material." *Id.* at 29 (citing Ex. 1002 ¶ 137; Ex. 1038 ¶ 42).

For claim 9, Patent Owner relies on its contentions for claim 7. *See* PO Resp. 43.

Based on our review of the evidence cited by Petitioner, we find that Nerone discloses this limitation and determine that Petitioner establishes by a preponderance of the evidence that claim 9 is unpatentable over Nerone as modified by Martin for claim 7.

5. Claim 11

Claim 11 depends from claim 7 and recites "wherein the capacitor is configured to smooth the rectified output AC voltage." Ex. 1001, 28:5–6.

Petitioner contends that "*Nerone*'s capacitor 160 is "configured to smooth the rectified output AC voltage," because it "affects how the resonant inductor 150 and resonant capacitor 155 network perceives the impedance of the LEDs" and "may limit the current through the LEDs." Pet. 30 (citing Ex. 1032, 3:28–29). According to Petitioner, "matching capacitor 160 'smooth[s]' the voltage waveform" because "current and voltage are directly related (Ohm's Law), restricting the peaks and valleys of the current

likewise limits the peaks and valleys of the voltage waveform." *Id.* (citing Ex. 1002 ¶¶ 138–140).

Patent Owner responds that Nerone's capacitor 160 is part of the "driver" identified by Petitioner. Pet. 44 (citing Pet. 16; Ex. 2001 ¶ 108); Sur-reply 18–19. According to Patent Owner, because capacitor 160 is part of the "driver", "it is not **connected to** the driver as called for in Claim 11." *Id.* at 44–45. Patent Owner next contends that capacitor 160 functions "to 'affect[] how the resonant inductor 150 and resonant capacitor 155 network perceives the impedance of the LEDs 170, 175' . . . meaning that its value is selected to tailor impedance of the load (LEDs 170, 175) to match the resonant load network (150, 155)." *Id.* at 45 (citing Ex. 1032, 3:35–37).

Petitioner replies that "claim 11 *does not recite* that the capacitor is 'connected to the driver." Pet. Reply 19 (citing PO Resp. 44–45). Petitioner further contends that Patent Owner "does not explain why selecting a particular value for the capacitor precludes smoothing" but "seems to concede that matching capacitor 160 is configured to smooth the AC signal into the second bridge rectifier 420 . . . and hence the rectified AC signal output by the rectifier." *Id.* (citing PO Resp. 45–46).

For the following reasons, Petitioner persuades us that claim 11 would have been unpatentable in light of Nerone and Martin.

Patent Owner's contention that claim 11 requires the capacitor to be connected to the driver is unsupported by the claim language. Neither claim 11 nor claim 7 require the capacitor to be connected to the driver. Ex. 1001, 27:48–27:62, 28:5–6.

Nerone discloses that capacitor 160 "affects how the resonant inductor 150 and resonant capacitor 155 network perceives the impedance of the

Samsung Ex. 1098, p. 41
Samsung Electronics Co., Ltd. v. Netlist, Inc., IPR2023-00455

LEDs" and "may limit the current through the LEDs." Ex. 1032, 3:25–29. Dr. Baker testifies that, considering Ohm's Law, this disclosure means "the matching capacitor 160 'smooth[s]' the voltage waveform." Ex. 1002 ¶ 138. Neither Patent Owner nor Dr. Ducharme dispute this testimony by Dr. Baker. PO Resp. 44–45; Ex. 2001 ¶ 110. We credit Dr. Baker's testimony on this point because it is based on the disclosure of Nerone and basic scientific principles, i.e., Ohm's law. Thus, we find that Nerone discloses "the capacitor is configured to smooth the rectified output AC voltage."

Based on our review of the evidence cited by Petitioner and after considering all of Patent Owner's contentions, we determine that Petitioner establishes by a preponderance of the evidence that claim 11 is unpatentable over Nerone as modified by Martin for claim 7.

F. Ground 2: Obviousness over Nerone, Martin, and Morgan

Claim 8, which depends from claim 7, recites "further comprising power factor correction circuitry." Ex. 1001, 27:63–64.

Petitioner contends that "it would have been obvious in view of *Morgan* to configure the *Nerone-Martin* system to implement" power factor correction circuitry. Pet. 32 (citing Ex. 1002 ¶¶ 204–207). Patent Owner does not address Petitioner's contentions for claim 8 but relies on its contentions for claim 7. PO Resp. 46.

1. Morgan – Exhibit 1033

Morgan is titled "Controlled Lighting Methods and Apparatus." Ex. 1033, code (54). Morgan discloses that "[i]n an ideal situation, both input current and voltage would be in phase and sinusoidal. For a given situation power factor can be defined as real power (Watts) divided by apparent power (Current x Voltage)." Ex. 1033, 76:40–42. Morgan further

discloses that "if the voltage and current are out of phase, then the product [of current and voltage] can be very different from the real power used by a device. For a simple resistive load the power factor is unity or 1.0. For switching supplies, however, the power factor can be much lower." *Id.* at 76:45–49. Morgan further discloses that "[f]ixing low power factor can be accomplished through the use of power factor correction." *Id.* at 76:49–51.

2. Analysis

Petitioner contends that "power factor and power factor correction were well understood by a" person of ordinary skill in the art. Pet. 32 (citing Ex. 1002 ¶ 147). Petitioner further contends that "[a] poor power factor would reduce efficiency of a circuit, and certain power supply/driver circuitry could lower a system's power factor." *Id.* (citing Ex. 1002 ¶ 148; Ex. 1013, 5:1–12). Petitioner turns to Morgan which, according to Petitioner, "describes power factor correction as a solution." *Id.* (citing Ex. 1033, 76:49–54). Petitioner further contends that Morgan discloses "a typical LED illumination power and data supply system for a lighting unit" with power factor corrector 4104. *Id.* at 32–33 (citing Ex. 1033, 13:16–17, Fig. 48). Petitioner further contends that power factor correction circuitry "was known to be a publicly and commercially available product." *Id.* at 33 (citing Ex. 1002 ¶¶ 149–150; Ex. 1013, 1:54–2:67, 3:14–15, 5:53–59; Ex. 1031, 7:5–10; Ex. 1093, 1:6–26). Petitioner further contends that a person of ordinary skill in the art "would have been motivated to modify the combined *Nerone* lighting system to include power factor correction circuitry like that claimed, *e.g.*, for obtaining a high power factor and thereby increasing the efficiency of the lighting system" and would have had

a reasonable expectation of success. *Id.* at 34–35 (citing Ex. 1002 ¶¶ 152–153).

We have reviewed Petitioner's contentions and evidence and determine that Petitioner establishes by a preponderance of the evidence that claim 8 would have been unpatentable over the combined teachings of Nerone, Martin, and Morgan.

G. Ground 3: Obviousness over Nerone, Martin, and Zinkler

Claim 10 depends from claim 7 and recites "wherein the rectified output AC voltage provided to the LED circuit array is relatively close to the input AC voltage input received from the mains power source." Ex. 1001, 28:1–4.

Petitioner contends that "*Nerone-Martin* in view of *Zinkler* discloses or suggests this limitation." Pet. 35 (citing Ex. 1002 ¶¶ 71–74, 154–163). Patent Owner does not address Petitioner's contentions for claim 10 but relies on its contentions for claim 7. PO Resp. 47.

1. Zinkler – Exhibit 1042

Zinkler discloses "[a] track lighting hybrid illumination system comprising a power supply circuit having an input for connecting to a voltage source of low frequency for providing an output voltage with altered electrical characteristics." Ex. 1042, code (57). Zinkler discloses illumination system 40 comprising "rectifier 46 in combination with the variable frequency inverter 48 [that] constitutes a frequency conversion means 50 for converting low frequency voltage produced by the AC voltage source 42 to a high frequency voltage" and an optional step up transformer that "can be used to ensure that the voltage V_{out} across conductors 43 is

equal to the voltage of the AC source 42 or to any other desired value." *Id.* at 9:12–15, 9:38–41.

2. Analysis

Petitioner contends that Nerone's "circuit 400 of figure 4 'is identical to the power supply circuit 100 of Fig. 1, with the exception of the resonant load circuit 405.'" Pet. 36 (citing Ex. 1032, 5:52–54). Petitioner further contends that "circuit 400 of *Nerone*'s Figure 4, like circuit 100 of *Nerone*'s Figure 1, discloses '[a] DC-to-AC converter, which includes first and second switches 120 and 125.'" *Id.* (citing Ex. 1002 ¶ 156; Ex. 1032, Fig. 1, Fig. 4). Petitioner turns to Zinkler's step up transformer for disclosure of an output voltage equal to the voltage of the AC source. *Id.* at 38 (citing Ex. 1002 ¶ 158; Ex. 1042, 9:33–41). Petitioner further contends that in light of this disclosure, a person of ordinary skill in the art would have "found it obvious to, configure the driver of the above *Nerone-Martin* system to implement a transformer to adjust the voltage provided by *Nerone*'s DC-AC converter circuitry such that the output of the driver is relatively close to the input AC voltage received from the mains power source" and would have had a reasonable expectation of success. *Id.* a 38–39 (citing Ex. 1002 ¶ 159, 161–62).

We have reviewed Petitioner's contentions and evidence and determine that Petitioner establishes by a preponderance of the evidence that

Samsung Ex. 1098, p. 45
Samsung Electronics Co., Ltd. v. Netlist, Inc., IPR2023-00455

claim 10 would have been unpatentable over the combined teachings of Nerone, Martin, and Zinkler.

H. Ground 4: Obviousness over Nerone, Martin, and Michael

Claim 12 depends from claim 7 and recites "a data communication circuit comprising an antenna, wherein the data communication circuit is integrated with the substrate." Ex. 1001, 28:7–10.

Petitioner contends that "it would have been obvious in view of *Michael* and the state of the art to implement" the features recited in claim 12. Pet. 40 (citing Ex. 1002 ¶¶ 75–79, 164–173). Patent Owner disputes Petitioner's contentions. PO Resp. 47–49.

1. Michael – Exhibit 1008

Michael discloses a lighting assembly including "a remote control assembly for selectively energizing tricolor diodes." Ex. 1008, code (57). Michael discloses that the 5-volt output of unit 330 powers microcomputer 334 and 24-volt raw DC voltage from unit 324 is brought out to unit 328, which provides 18 volts to power LED drivers 338, 340 and 342. *Id.* at 7:57–64. We reproduce Figure 15 of Michael below:

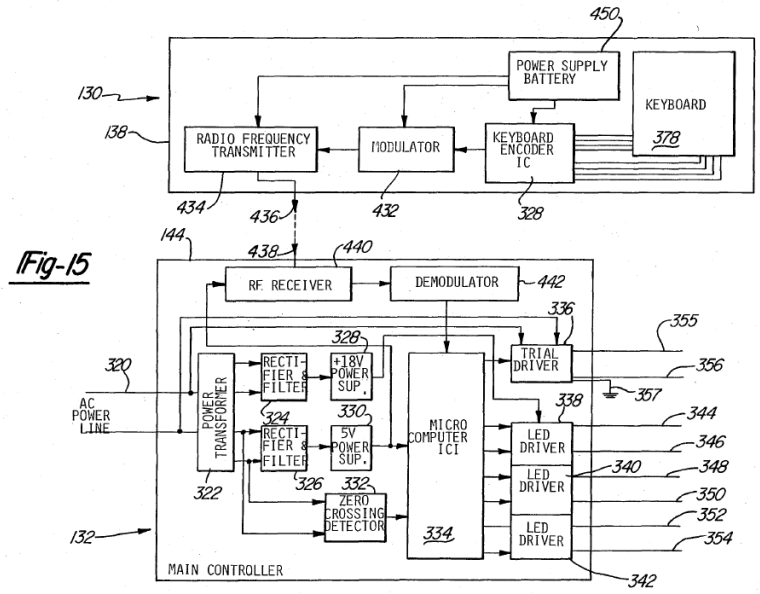

Figure 15 is a block diagram of a control assembly for use with Michael's lighting assembly. Ex. 1008, 2:48–50.

In Figure 15, transmitter 434 provides a signal through antenna 436 to receiving antenna 438, which in turn inputs the signal to radio frequency receiver 440 that in turn outputs to demodulator 442, which outputs to microcomputer 334. *Id.* at 10:52–58. Michael explains that, as above, unit 328 provides 18 volts to power LED drivers 338, 340 and 342." *Id.* at 7:59–63.

2. Analysis

Petitioner contends that Michael "discloses a lighting assembly including LED drivers . . . coupled to LEDs . . . via drive/return lines . . . and further discloses an antenna 438 . . . receiving data wirelessly for remote[] control of LEDs." Pet. 40 (citing Ex. 1002 ¶ 166; Ex. 1008, 8:23–24, 8:29–34, 8:54–66, 8:67–9:2, Fig. 15). Petitioner further contends that "*Michael*'s encoder IC 328 provides an encoded signal that is modulated and transmitted to antenna 438, and is inputted to a radio frequency receiver 440 . . . [which] outputs to a demodulator 442 which outputs to microcomputer 334." *Id.* at 42 (citing Ex. 1002 ¶ 167; Ex. 1008, 10:48–58. According to Petitioner, "*Michael*'s controller 132, in conjunction with antenna 438, discloses a data communication circuit comprising an antenna." *Id.* (citing Ex. 1002 ¶ 168).

Petitioner next contends that a person of ordinary skill in the art "would have been motivated to configure the *Nerone-Michael* system to comprise a data communication circuit that comprises an antenna and that is integrated with the substrate." Pet. 42 (citing Ex. 1002 ¶ 70). According to Petitioner, "such a configuration would have been useful for enabling remote wireless control of the lighting system" and "wireless remote control of

lighting was well known." *Id.* (citing Ex. 1002 ¶ 170; Ex. 1005, ¶¶ 32, 83, 110, 123, 177, Abstract, Fig. 5; Ex. 1008, 10:48–58, Fig. 15; Ex. 1022, Fig. 4A). Petitioner further contends that wireless control of traffic light systems, as in Nerone, was also well known. *Id.* at 43 (citing Ex. 1002 ¶ 171; Ex. 1103, 1:11–62, 3:34–63).

Patent Owner responds that Michael discloses an incandescent bulb fixture with vertical LED ribs 72, 40, and 54 surrounding incandescent bulb 34. PO Resp. 47–48 (citing Ex. 1008, Figs. 1–2; Ex. 2001 ¶ 115). Patent Owner contrasts Michael with Nerone which "is directed to a traffic light assembly." *Id.* at 48 (citing Ex. 1032, 2:63–65. 5:10–12, 5:23–25, 5:51–52, 6:7–11; Ex. 2001 ¶ 116). Patent Owner contends that a person of ordinary skill in the art "would have no reason to incorporate a remote control to wirelessly control a traffic light. It is well known that traffic lights turn on and off automatically and there is no need for a remote control device to wirelessly change lights from green to yellow, yellow to red, etc." *Id.* at 49 (citing Ex. 2001 ¶ 117). Patent Owner further contends that a person of ordinary skill in the art would not combine "Martin's light fixture having an incandescent light surrounded by vertically displaced LED ribs with the traffic light circuit of Nerone" because "Michael's modified incandescent light fixture is a completely different apparatus with a completely different application compared to Nerone." *Id.* (citing Ex. 2001 ¶ 118).

Petitioner, in turn, replies that Patent Owner "ignores evidence of wireless lighting control, including traffic lights, and the supported reasons for modifying *Nerone*." Pet. Reply 21 (citing Pet. 40–43). Petitioner further contends that Patent Owner's argument that a person of ordinary skill in the art "would not combine 'Michael's light fixture . . . with the traffic light

circuit of Nerone' . . . is inapposite" because it is based on an improper bodily incorporation of Nerone and Michael. *Id.* at 22.

For the following reasons, Petitioner persuades us that claim 12 would have been unpatentable in light of Nerone, Martin, and Michael.

Patent Owner contends that "there is no reason to incorporate a remote control to wirelessly control a traffic light." PO Resp. 49 (citing Ex. 2001 ¶ 117). Patent Owner bases this contention on Dr. Ducharme's testimony which repeats the Petition verbatim and ignores evidence cited in the Petition. Exhibit 1103 discloses that "[a] variety of methods, systems and devices have been proposed to allow emergency vehicles to control traffic signals. These typically use radio transmitter systems for activating emergency preemption controls on the traffic signals." Ex. 1103, 1:40–44. Consequently, Dr. Ducharme's testimony on this point is contrary to the disclosure of Exhibit 1103 which discloses that emergency vehicles remotely control traffic lights. His testimony, is entitled to little, if any, weight. Patent Owner's contention is, thus, unavailing.

Patent Owner's second contention is likewise unavailing because the Petition does not propose to bodily incorporate Nerone and Michael. Rather, the Petition proposes in light of Martin and the knowledge of one of ordinary skill in the art "to configure the *Nerone-Michael*[11] system to comprise a data communication circuit that comprises an antenna and that is incorporated with the substrate." Pet. 42 (citing Ex. 1002 ¶ 170).

We have reviewed Petitioner's contentions and the evidence of record and after considering Patent Owner's contentions, we find that the

[11] The reference to "Nerone-Michael" appears to be a typographical error. We assume it should refer to "Nerone-Martin."

Samsung Ex. 1098, p. 49
Samsung Electronics Co., Ltd. v. Netlist, Inc., IPR2023-00455

combination of Nerone, Martin, and Michael suggests the limitations recited in claim 12. Further, Petitioner provides reasons supported by a rational underpinning why a person of ordinary skill in the art would have been motivated to combine Nerone, Martin, and Michael. Ex. 1002 ¶¶ 168–172.

For all the foregoing reasons, we determine that Petitioner establishes by a preponderance of the evidence that claim 12 would have been unpatentable over Nerone, Martin, and Michael.

I. Ground 5: Obviousness over Nerone, Martin, Michael, and Gleener

Claim 13, which depends from claim 12, recites "wherein the capacitor is a first capacitor, wherein the data communication circuit further comprises an inductor and a second capacitor." Ex. 1001, 28:12–14.

Petitioner contends that "*Nerone-Martin-Michael* in view of *Gleener* discloses or suggests" the limitations of claim 13. Pet. 43–44 (citing Ex. 1002 ¶¶ 80–83, 174–181). Patent Owner does not address Petitioner's contentions for claim 13 but relies on its contentions for claim 12 and claim 7. PO Resp. 50.

1. Gleener – Exhibit 1039

Gleener describes a tunable dual band antenna system. Ex. 1039, code (57). The system includes a transceiver, a matching network and an antenna. *Id.* The matching network tunes the antenna to the transceiver at both a first and second frequency. *Id.* The matching network has a variable capacitor, an inductor and a second capacitor. *Id.* The value of the variable capacitor is chosen to tune the antenna at the first frequency and the second frequency such that the system can be used to transmit and receive electromagnetic energy over two bandwidths. *Id.* The values of the variable capacitor, the inductor, and the second capacitor are chosen to minimize the

standing wave ratio of the system at both the first frequency and the second frequency. *Id.*

2. Analysis

Petitioner first refers to its contentions for limitation 7(c) and contends that Nerone's "rectifier 34 includes a capacitor, and that capacitor is a 'first capacitor' as claimed." Pet. 44 (citing Ex. 1002 ¶ 175). Petitioner next contends that "[t]o the extent *Nerone-Martin-Michael* does not explicitly disclose that the data communication circuit discussed for claim 12 . . . comprises an inductor and a second capacitor, it would have been obvious in view of *Gleener* to configure the *Nerone-Martin-Michael* system to implement such features." *Id.* (citing Ex. 1002 ¶ 175).

Petitioner next contends that Gleener discloses "implementing an antenna-based system, including maximizing transfer of energy to the antenna." Pet. 44 (citing Ex. 1002 ¶ 176; Ex. 1039, code (54), code (57), ¶ 1). Petitioner further contends that "*Gleener* discloses a data communication circuit comprising an inductor and a capacitor." *Id.* (citing Ex. 1002 ¶ 177; Ex. 1039 ¶ 20, Fig. 3). Petitioner further contends that "*Gleener* discloses that its data communication circuit includes a matching network 104 comprising an inductor 110 . . . and a capacitor 112." *Id.* at 45 (citing Ex. 1002 ¶ 178; Ex. 1039 ¶ 14, Fig. 3).

Petitioner next contends that, in light of Gleener, a person of ordinary skill in the art "would have been motivated to configure the *Nerone-Martin-Michael* data communication circuit to comprise an inductor and a second capacitor." Pet. 46 (citing Ex. 1002 ¶ 180). According to Petitioner, including "an inductor and a second capacitor to match the impedance between a transmitter/receiver and the *Nerone-Martin-Michael* antenna

Samsung Ex. 1098, p. 51
Samsung Electronics Co., Ltd. v. Netlist, Inc., IPR2023-00455

would have promoted efficiency and antenna performance." *Id.* (citing Ex. 1002 ¶ 180; Ex. 1039 ¶ 2).

We have reviewed Petitioner's contentions and evidence and determine that Petitioner establishes by a preponderance of the evidence that claim 12 would have been unpatentable over the combined teachings of Nerone, Martin, Michael, and Gleener.

J. Ground 6: Obviousness over Zhang and Martin

Petitioner contends that claims 7, 9–11, and 17 are unpatentable over Zhang and Martin. Pet. 47–58. In support thereof, Petitioner identifies the disclosures in Zhang and Martin alleged to describe the subject matter in these claims. *Id.* Additionally, Petitioner cites to Dr. Baker's Declaration. Ex. 1002 ¶¶ 84–90, 182–203.

Patent Owner contends that Petitioner fails to establish that Zhang and Martin teach limitations 7(b), 7(d), 7(e), and 7(f). PO Resp. 50–64.

We begin our analysis with a brief overview of Zhang. We then address the parties' respective contentions with respect to claims 7, 9–11, and 17.

1. Zhang – Ex. 1012

Zhang is titled "Lighting Devices Using LEDS." Ex. 1012, code (54). Zhang discloses chip-on-board LED exit signs having LED chips on a circuit board and "coat[ing] a layer of high reflection material on the board to collect light." *Id.* at code (57).

Zhang depicts the design of the circuitry of a circuit board in Fig. 2.1, reproduced below:

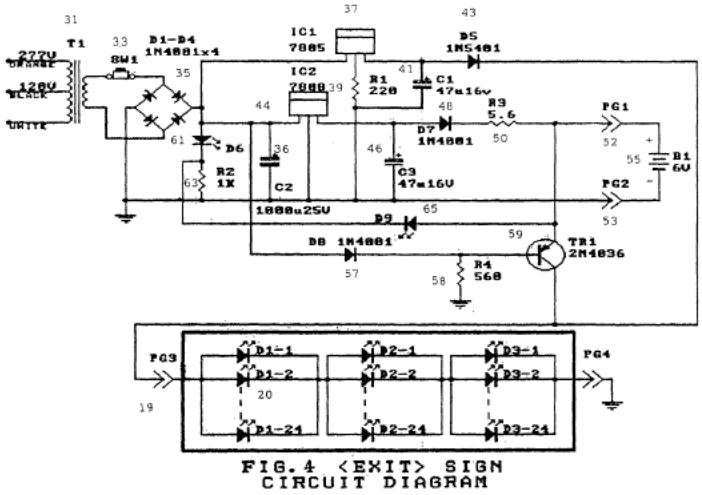

Fig. 2.1, Electronic Circuit Board for LED Exit Sign

Fig. 2.1 is "the electronic diagram of the chip-onboard LED Exit Sign with battery backup." *Id.* ¶ 64.

Zhang discloses that "[t]he circuit design allows the LED board to use 120 VAC or 220 VAC line power and charge the battery. During power interruption, the battery becomes the power supply for the LED board." *Id.* ¶ 36. Zhang explains that "[a]fter filtering by the capacitor 36, the first output of the DC power from the rectifier 35 is sent to the regulator 37 of 5 VDC" and "the output of the regulator lights the [chip-on-board LED electronic sign] COBLEDES 19 through diode 43." *Id.* ¶ 84. According to Zhang, "[b]ecause of the wide angle nature of the chip-on-board LED and the light reflected from the reflection layer, the viewing angle of the COBLEDES can reach almost 180 degrees and the uniformity is over 95%." *Id.* ¶ 81.

2. Claim 7

We analyze the parties' respective contentions for limitation 7(e) because, as we explain below, we find that Zhang and Martin do not teach or suggest this limitation.

> *[e] a driver connected to the bridge rectifier and configured to provide a rectified output AC voltage to the LED circuit array;*

Petitioner contends that Zhang's "regulator 37" corresponds to the recited driver and is "connected to bridge rectifier 35 . . . and configured to provide a rectified output AC voltage to the LED circuit array." Pet. 51 (citing Ex. 1012 ¶ 37). In support of this contention, Petitioner provides the following annotated version of Zhang's Figure 2.1 (*id.* at 52):

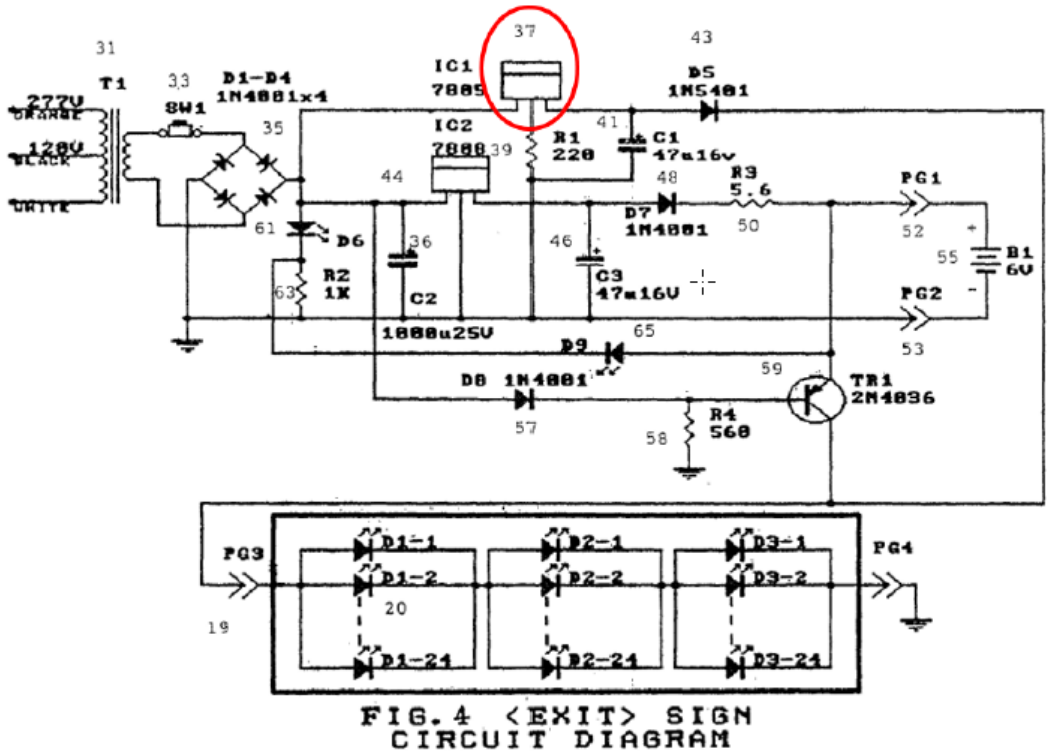

Fig. 2.1, Electronic Circuit Board for LED Exit Sign

Figure 2.1 of Zhang is the electronic circuit diagram of the LED exit sign which Petitioner annotates with a red ellipse around element 37. *Id.* at 52. Petitioner further contends "[t]he voltage provided by regulator 37 to the LEDs is a *rectified* AC voltage because of the rectification performed by

rectifier 35 and it is an *output* voltage because it is the output of regulator 37." *Id.* at 51 (citing Ex. 1002 ¶ 189).

Patent Owner contends that a person of ordinary skill in the art "would readily recognize that the part number for regulator 33 (7805) refers to the Fairchild Semiconductor LM 7805 Fixed Voltage Regulator, which provides a fixed output voltage." PO Resp. 59 (citing Ex. 2001 ¶¶ 1335–136; Ex. 2008, 1; Ex. 2011). Patent Owner further contends that a person of ordinary skill in the art "would understand that the LM 7805 fixed voltage regulator 37 provides a fixed output DC voltage." *Id.* at 59–60 (citing Ex. 1102, Fig. 2.1; Ex. 2001 ¶ 136). According to Patent Owner, Zhang's "rectifier 35 produces an output" of 11.3V which "is the input to voltage regulator 37 which has an output of 5V DC." *Id.* at 60 (citing Ex. 2001 ¶ 138). Patent Owner further contends that this limitation is not satisfied because "the LM 7805 fixed voltage regulator (the alleged 'driver') **receives** a 'rectified AC voltage', but its does not **provide** a 'rectified AC voltage.'" *Id.* (citing Ex. 2001 ¶ 138).

Petitioner replies that Patent Owner "seems to imply that a ***direct*** connection is required between the output of the claimed ***bridge rectifier*** (providing a rectified AC voltage) and LED circuit array" but "claim 7 recites a *driver* 'configured to provide a rectified output AC voltage' that is connected to the bridge rectifier." Pet. Reply 25 (citing PO Resp. 60; Ex. 1001, 27:54–55). Petitioner contends that Patent Owner's "argument relies on a distinction between 'rectified AC voltage' and 'DC voltage' absent in the '400 patent." *Id.* (citing Ex. 1001, 2:20–23, 3:38–59, 4:20, 13:46–47). Petitioner further contends that Patent Owner's "position is at odds with [Dr. Ducharme's] view that 'rectified AC' simply means 'voltage from a

rectifier.'" *Id.* at 26 (citing Ex. 11:9–12:9). Petitioner further contends that Patent Owner's assertion "that regulator 37 is a specific regulator is speculation, but, even if it were, PO's blanket cite to Exhibit 2008 does not show using such a regulator in *Zhang* with a bridge rectifier means it's output is not a rectified AC voltage." *Id.* (citing PO Resp. 59; Ex. 2008). Petitioner also contends that Exhibit 2008 indicates the regulator "can be used to obtain 'variable voltages.'" *Id.*, n. 15.

In the Sur-reply, Patent Owner contends that, in the Patent Owner Response, it "did not address an alleged connection involving the bridge rectifier and the LED circuit array, as Petitioner suggests." Sur-reply 24 (citing Pet. Reply 25; PO Resp. 59–60). Patent Owner reiterates that "the output of voltage regulator 37 is not a rectified AC voltage output." *Id.*

For the following reasons, Petitioner does not persuade us that Zhang and Martin teach or suggest this limitation.

This limitation recites, *inter alia*, "a driver . . . configured to provide a rectified output AC voltage to the LED circuit array." Ex. 1001, 27:54–56. In this case, Petitioner contends that Zhang's regulator 37 corresponds to the recited driver. Pet. 51. Petitioner points to Zhang's bridge rectifier 35 for generating rectified AC voltage that is provided to regulator 37. *Id.* Patent Owner does not dispute that bridge rectifier 35 provides a rectified AC voltage to regulator 37. *See* PO Resp. 60 ("Specifically, the rectifier 35 produces an output . . . 11.3V."). Patent Owner's contentions focus on the effect regulator 37 has on the rectified AC voltage provided to Petitioner's "driver." In other words, what does regulator 37 provide to the LED circuit array?

Samsung Ex. 1098, p. 56
Samsung Electronics Co., Ltd. v. Netlist, Inc., IPR2023-00455

Petitioner contends that Patent Owner's argument that regulator 37 is the Fairchild LM 7805 regulator is "speculation." Pet. Reply 26. Dr. Baker, however, appears to confirm Petitioner's contention in his deposition. Ex. 2006, 106:14–7.

In his declaration, Dr. Baker does not analyze what effect regulator 37 has on the input received from bridge rectifier 35. Ex. 1002 ¶ 189. Rather, his testimony assumes that the rectified AC voltage passes through regulator 37 unchanged. *Id.*

Dr. Ducharme, on the other hand, testifies that "the rectifier 35 produces an output computed as . . . 11.3 V. That is the input to voltage regulator 37 which has an output of 5 V DC." Ex. 2001 ¶ 84 (citing Ex. 1012 ¶ 84). Although Petitioner submitted a Reply Declaration from Dr. Baker, Dr. Baker did not address or dispute Dr. Ducharme's testimony on this point. *See* Ex. 1107 ¶¶ 31–33. Further, Petitioner does not direct us to any portion of Dr. Ducharme's deposition, nor have we been able to locate any, discussing his testimony.

Dr. Baker testified as follows:

> I see that . . . regulator, if memory serves 7805 is a 5-volt regulator. I think if you put a resistor, the resistor labled R1 or 39 in the figure, to ground, the output voltage actually is . . . little bit higher than 5 volts. I think it – to be precise goes to 5 volts plus R1 time whatever current it's supplying. So if one were supplying 10 milliamps of current through 1N5401, diode that's labeled 43, then the output of the regulator would go to 7.2 volts. I think the takeaway is that the only time the 7805 outputs 5 volts is if the that middle pin in the regulator is connected to ground. If it's connected to a resistor, the output voltage can be a little above 5 volts. But anyway, yes, it's a 5-volt regulator.

Ex. 2006, 106:18–107:7. From this testimony, we infer that regulator 37 has some effect on the AC rectified voltage from bridge rectifier 35. Yet,

Samsung Ex. 1098, p. 57
Samsung Electronics Co., Ltd. v. Netlist, Inc., IPR2023-00455

Petitioner provides no evidence or persuasive technical reasoning disputing Dr. Ducharme's testimony that the output of regulator 37 is not providing "a rectified output AC voltage" to the LED circuit array despite the admitted differences between the input and output of regulator 37. In the absence of evidence or persuasive technical reasoning, Petitioner does not carry its burden.

Based on the foregoing, we find that Petitioner does not persuade us that Zhang teaches or suggests this limitation.

Because Petitioner does not persuade us that Zhang teaches or suggests this limitation, Petitioner does not establish by a preponderance of the evidence that claim 7 would have been unpatentable over Zhang and Martin.

3. Claims 9–11

Claims 9–11 depend from claim 7. Ex. 1001, 27:65–28:6, 28:30–33. Petitioner details the disclosure in Zhang and Martin that it contends corresponds to the limitations in claims 9–11 and 17. Pet. 56–58.

We have reviewed Petitioner's contentions as well as the cited evidence and find that it does not cure the deficiencies discussed above for claim 7.

We, thus, determine that Petitioner has not proven by a preponderance of the evidence that claims 9–11 would have been unpatentable over Zhang and Martin.

4. Claim 17

Claim 17 depends from claim 14. Ex. 1001, 28:30. Patent Owner has statutorily disclaimed claim 14. PO Resp. 65 (citing Ex. 2011).

Petitioner sets forth contentions supported by evidence that Zhang teaches or suggests each limitation of claim 14. Pet. 60–66. In arguing for the patentability of claim 17, Patent Owner does not dispute Petitioner's contentions for claim 14. PO Resp. 65–66.

We have reviewed Petitioner's contentions for claim 14 and find that Zhang discloses or suggests each limitation of claim 14.

Claim 17 recites "wherein the LEDs are coated or doped with at least one of phosphor, nano-crystals, or a lighting changing or enhancing substance." Ex. 1001, 28:30–32.

Petitioner contends that "the application of phosphors and light changing substances to LEDs was a well-known technique in the art, as explained in Ground 1." Pet. 56 (citing Ex. 1002 ¶¶ 197–200; Ex. 1015 ¶ 27; Ex. 1014, 12:4–13; Ex. 1049, 2:37–45, 3:36–45, 4:34–37, 5:54–58, 8:34–39, Fig. 6). Petitioner further contends that "*Martin* discloses LEDs coated with a wavelength converting layer (*i.e.*, 'a light changing substance,' as claimed), such as a phosphor, to enable conversion of the color of light emitted by the LEDs." *Id.* at 56–57 (citing Ex. 1002 ¶ 198; Ex. 1015 ¶¶ 5, 27; Ex. 1014, 12:4–13). Petitioner further contends a person of ordinary skill in the art "would have been motivated, and found it obvious, to coat the LEDs of . . . modified *Zhang*'s device (claim 14) with a phosphor or other light changing material." *Id.* at 57 (citing Ex. 1002 ¶ 199). Petitioner further contends that a person of ordinary skill in the art would have had a reasonable expectation of success in doing so. *Id.* (citing Ex. 1002 ¶ 200).

Patent Owner, in turn, contends that a person of ordinary skill in the art would understand that "the LED exit sign that Petitioner relies upon for its unpatentability theory . . . would have LEDs of one color: red." PO Resp.

Samsung Ex. 1098, p. 59
Samsung Electronics Co., Ltd. v. Netlist, Inc., IPR2023-00455

63 (citing Ex. 2001 ¶ 147; Ex. 2006, 108:21–109:6). Patent Owner further contends that "[a]t the time of the invention in 2004, red LEDs were well known in the art" and "[a]ccordingly, a [person of ordinary skill in the art] would implement the LED exit sign of Zhang using red LEDs, and there would be no reason to refer to Martin to coat or dope the LEDs to provide red illumination for the exit sign." *Id.* at 64 (citing Ex. 2001 ¶ 148; Ex. 2009, 3:35–46; Ex. 2010, 4:60–63).

In the reply, Petitioner contends that Patent Owner "fails to show any significance of red LEDs in undercutting a use of a phosphor to produce colored light" and "does not dispute the well-known use of red and green phosphor coatings to produce colored light." Pet. Reply 28 (citing Ex. 1015 ¶ 27). Petitioner further contends that Patent Owner's "submission of known 'red LEDs' (Exs. 2009-2010) does not show otherwise—particularly because the exhibits lack any indication that the described 'red LEDs' ***do not use*** [] a phosphor." *Id.*

For the following reasons, Petitioner persuades us that claim 17 would have been unpatentable over the combined teachings of Zhang and Martin.

In Dr. Baker's testimony, he relies on Exhibit 1049 for disclosing that phosphor layers may used to provide specific colored light. Ex. 1002 ¶ 197. Patent Owner points to other references that purportedly show that "red LEDs were well known in the art." PO Resp. 64. After reviewing the cited portions of Exhibits 2009 and 2010, we agree with Petitioner that there is nothing to indicate the red LEDs do not use a phosphor. Consequently, Patent Owner's evidence does not undercut Dr. Baker's testimony, which we credit, as to why a person of ordinary skill in the would have been motivated with a reasonable expectation of success to modify Zhang in light of Martin

Samsung Ex. 1098, p. 60
Samsung Electronics Co., Ltd. v. Netlist, Inc., IPR2023-00455

"with at least one of a phosphor, nano-crystals, or light changing substance." Ex. 1002 ¶¶ 199–200.

After review of Petitioner's contentions and evidence and after considering Patent Owner's contentions and evidence, we determine that Petitioner establishes by a preponderance of the evidence that claim 17 would have been unpatentable over Zhang and Martin.

K. Ground 7: Obviousness over Zhang, Martin, and Morgan

Claim 8 depends from claim 7. Ex. 1001, 27:63–64. Petitioner details the disclosure in Zhang, Martin, and Morgan that it contends corresponds to the limitations in claim 8 as well as reasons for combining Zhang with Morgan. Pet. 59.

We have reviewed Petitioner's contentions as well as the cited evidence and find it does not cure the deficiencies discussed above for claim 7 in Ground 6.

We, thus, determine that Petitioner has not established by a preponderance of the evidence that claim 8 would have been unpatentable over Zhang, Martin, and Morgan.

L. Ground 8: Obviousness over Zhang and Mosebrook

Claim 15 depends from claim 14 and recites "further comprising a 3-way switch." Ex.1001, 28:25–26. Petitioner contends that claim 15 "would have been obvious in view of *Mosebrook* and state of the art to implement [a 3-way switch] in *Zhang*'s device." Pet. 66 (Ex. 1002 ¶¶ 91–92, 218–221). Patent Owner disputes Petitioner's contentions. PO Resp. 66–67.

1. Mosebrook – Ex. 1018

Mosebrook discloses "an antenna which is provided on a lighting control device, for example, a light dimmer, and which receives and

Samsung Ex. 1098, p. 61
Samsung Electronics Co., Ltd. v. Netlist, Inc., IPR2023-00455

transmits radio frequency signals for controlling a lamp and communicating status of the lamp e.g., on, off and intensity level." Ex. 1018, 1:17–21. Mosebrook also discloses that "a user can install a so called three-way electrical switch, i.e., an additional light control switch to an existing hardwired single control system by replacing an existing manually operated lighting control device with a lighting control device having a radio frequency receiver incorporated therein." *Id.* at 2:30–35. Mosebrook explains that such "replacement lighting control device is hardwired into the electrical system in the same way as the conventional device to control the lamp." *Id.* at 2:35–37.

2. Analysis

Petitioner contends that "*Zhang* discloses the use of a switch in LED lighting devices that control signals connected to LEDs." Pet. 66 (citing Ex. 1012 ¶ 119; Fig. 5.3). Petitioner further contends that "*Mosebrook* explains that it was known that 'a user can install a so-called **three-way electrical switch**, *i.e.*, an additional light control switch to an existing hardwired single control system" and a person of ordinary skill in the art "would have known that such a three-way switch was a conventional device that was widely used in various lighting systems, *e.g.*, to enable a user to control a lighting system from two places . . . or control the selection of functionality in lighting systems." *Id.* at 67 (citing Ex. 1002 ¶ 220; Ex. 1018, 2:30–35; Ex. 1028, 2:1–15, 3:66–4:5, Figs. 1, 4; Ex. 1029, 5:30–34, Fig. 1; Ex. 1040 ¶ 18). According to Petitioner, "[s]uch an implementation would have been a mere combination of known components and technologies, according to known methods, to produce predictable results." *Id.* at 68 (citing Ex. 1002 ¶ 221).

Samsung Ex. 1098, p. 62
Samsung Electronics Co., Ltd. v. Netlist, Inc., IPR2023-00455

Patent Owner contends that "the Petition articulates no reason why an LED exit sign would benefit from a 3-way switch" and "do[es] not even attempt to explain how a 3-way switch would work with an LED exit sign, such as what operating mode would correspond to each of the three switch positions." PO Resp. 66 (citing Ex. 2001 ¶ 155). Patent Owner further contends that "the National Fire Protection Association . . . Safety Code 101 . . . requires that exit signs be illuminated continuously." *Id.* (citing Ex. 2013, 70) ("NFPA"). Based on this, Patent Owner contends that a person of ordinary skill in the art "would not implement a 3-way switch to control an exit sign because it would be contrary to safety standards." *Id.* at 67 (citing Ex. 2001 ¶ 156).

Petitioner replies that the Petition provides reasons why an LED exit sign would have benefitted from a 3-way switch, including versatility in controlling the modified system. Pet. Reply 29 (citing Pet. 67–68. Petitioner further contends that NFPA supports obviousness because it "requires a switch to allow testing of the back-up battery" and "describes switching to various operational modes." *Id.* (citing Ex. 2013, 70). Petitioner further contends that Zhang discloses "a manual test switch to determine if the battery should be replaced." *Id.* (citing Ex. 1012 ¶83).

In the Sur-reply, Patent Owner contends that a person of ordinary skill in the art "would understand the NFPA as describing exit signs with two operational modes (not three) and thus would not have reason to modify Zhang's exit sign to add a three-way switch." Sur-reply 26–27.

For the following reasons, Petitioner persuades us that claim 15 would have been unpatentable over Zhang and Mosebrook.

Samsung Ex. 1098, p. 63
Samsung Electronics Co., Ltd. v. Netlist, Inc., IPR2023-00455

Patent Owner initially contends that modifying Zhang to implement a 3-way switch would be contrary to NFPA. PO Resp. 67. In the Sur-reply, Patent Owner does not dispute that both Zhang and NFPA disclose implementing switches in exit signs and apparently abandons its contention that implementing a three-way switch is contrary to NFPA. Sur-reply 26–27. Instead, it argues that because NFPA specifically discloses two operational modes, an ordinary skilled artisan would not have modified Zhang to include a three-way switch. This argument is immaterial because Petitioner's challenge does not include NFPA.

Petitioner relies on Dr. Baker's testimony and Mosebrook's disclosure that a three-way switch can be used "to control a lighting system from two places or control functionality in lighting systems." Pet. 67; Ex. 1002 ¶ 221. Dr. Baker testifies that implementing Mosebrook's 3-way switch in Zhang "would have been a mere combination of known components and technologies, according to known methods to produce predictable results." Ex. 1002 ¶ 221. Other than citing to NFPA, Dr. Ducharme does not dispute Dr. Baker's testimony which we credit because it is supported by disclosure from Mosebrook and the state of the art. Ex. 2001 ¶¶ 153–157.

We have reviewed Petitioner's contentions and evidence and after considering Patent Owner's contentions determine that Petitioner establishes by a preponderance of the evidence that claim 15 would have been unpatentable over Zhang and Mosebrook.

M. Ground 9: Obviousness over Zhang, Michael, and Gleener

Claim 16 depends from claim 14 and recites "a data communication circuit comprising an antenna, an inductor and a capacitor, wherein the data communication circuit is integrated into a single package." Ex. 1001,

Samsung Ex. 1098, p. 64
Samsung Electronics Co., Ltd. v. Netlist, Inc., IPR2023-00455

28:26–29. Petitioner contends that "it would have been obvious in view of *Michael, Gleener*, and the state of the art to implement" the features recited in claim 16 in Zhang. Pet. 68 (citing Ex. 1002 ¶¶ 222–228). Patent Owner disputes Petitioner's contentions. PO Resp. 67–68.

Petitioner contends that Michael "discloses . . . LED-based lighting systems" and "a data communication circuit comprising an antenna." Pet. 68–69 (citing Ex. 1002 ¶ 223; Ex. 1008, 1:5–7; 7:20–21, 7:35–43, 9:53-55, 10:48–61, Figs. 12, 15). Petitioner further contends that a person of ordinary skill in the art "would have been motivated to configure *Zhang*'s lighting device to include a data communication circuit comprising an antenna" because such a configuration would have been "useful for enabling a remote wireless control of the lighting device, *e.g.*, to turn on/off or otherwise control lighting (*e.g.*, brightness of lighting)." *Id.* at 69 (citing Ex. 1002 ¶ 224).

Petitioner further contends that a person of ordinary skill in the art would have considered Gleener which discloses "implementing an antenna-based system, including maximizing transfer of energy to the antenna" and "implementing efficient wireless control of the *Zhang-Michael* lighting device." *Id.* (citing Ex. 1002 ¶ 225; Ex. 1039, code (54), Code (57), ¶ 1). Petitioner next argues that Gleener "discloses a data communication circuit comprising an inductor and a capacitor for impedance matching and describes benefits associated with such impedance matching." *Id.* at 69–70 (citing Ex. 1002 ¶ 225; Ex. 1039 ¶¶ 2, 4, 14, 20, Figs. 1, 3).

Petitioner next contends that a person or ordinary skill in the art "would have been motivated to configure the data communication circuit of the *Zhang-Michael* device to comprise an inductor and a capacitor, in

addition to the antenna" to "advantageously promote[] efficiency and high antenna performance." Pet. 70 (citing Ex. 1002 ¶ 226; Ex. 1039 ¶ 2).

Patent Owner contends that "Petitioner does not articulate a reason why a [person of ordinary skill in the art] would incorporate a remote control/transceiver to wirelessly control an LED exit sign." PO Resp. 68. According to Patent Owner, "Petitioner only supplies generic reasoning that is untethered to the cornerstone of its theory—the LED exit sign of Zhang." *Id.* (citing Pet. 69; Ex. 2001 ¶ 161). Patent Owner next contends that a person of ordinary skill in the art "would not have a reason to combine teachings from Michael's light fixture having an incandescent light surrounded by vertically displaced LED ribs with the LED exit sign of Zhang. Michael's . . . light fixture is a completely different apparatus with a completely different application than Zhang." *Id.* (citing Ex. 2001 ¶ 162).

For the following reasons, Petitioner persuades us that claim 16 would have been unpatentable over Zhang, Michael, and Gleener.

Patent Owner does not dispute that Michael discloses a data communication circuit comprising an antenna nor does Patent Owner dispute that Gleener discloses a data communication circuit comprising an inductor and capacitor for impedance matching. *See* PO Resp. 67–68. Nor does Patent Owner dispute that Gleener describes benefits associated with impedance matching. *See id.*

Petitioner states reasons why a person of ordinary skill in the art would have been motivated to combine Zhang and Michael, i.e., to enable remote control to turn on or off the Zhang's lighting device or control the brightness. Pet. 69. Petitioner supports this contention with the testimony

Samsung Ex. 1098, p. 66
Samsung Electronics Co., Ltd. v. Netlist, Inc., IPR2023-00455

of Dr. Baker who relies on the disclosure of Zhang and Michael as well as the state of the art. Ex. 1002 ¶¶ 223–224.

Petitioner also states reasons why a person of ordinary skill in the art would have been motivated to further modify Zhang and Michael with Gleener, i.e., for the benefits of impedance matching. Pet. 69–70. Petitioner supports this contention with the testimony of Dr. Baker who relies on the disclosure of Zhang, Michael, and Gleener as well as the state of the art. Ex. 1002 ¶¶ 225–226.

Dr. Ducharme doesn't dispute Dr. Baker's testimony for claim 16. Ex. 2001 ¶¶ 158–163. We credit Dr. Baker's testimony which is supported by evidence for the reasons why a person of ordinary would have combined the teachings of Zhang, Michael, and Gleener. Consequently, Patent Owner's contention that Petitioner merely states generic reasons for the combination is unavailing.

Patent Owner's second contention that a person of ordinary skill in the art would not have combined Zhang and Michael because Michael is a completely different apparatus than Zhang is unavailing because the contention is based on bodily incorporating Zhang and Michael.

We have reviewed Petitioner's contentions and evidence, and after considering Patent Owner's contentions, determine that Petitioner establishes by a preponderance of the evidence that claim 16 would have been unpatentable over Zhang, Michael, and Gleener.

III. CONCLUSION

Weighing the evidence and the competing testimony, we determine that Petitioner establishes by a preponderance that claims 7–13 and 15–17 of the '400 patent are unpatentable.[12]

In summary:

Claim(s)	35 U.S.C. §	Reference(s)/Basis	Claims Shown Unpatentable	Claims Not Shown Unpatentable
7, 9, 11	103	Nerone, Martin	7, 9, 11	
8	103	Nerone, Martin, Morgan	8	
10	103	Nerone, Martin, Zinkler	10	
12	103	Nerone, Martin, Michael	12	
13	103	Nerone, Martin, Michael, Gleener	13	
7, 9–11, 17	103	Zhang, Martin	17	7, 9–11
8	103	Zhang, Martin, Morgan		8
15	103	Zhang Mosebrook	15	
16	103	Zhang, Michael, Gleener	16	
Overall Outcome			7–13, 15–17	

[12] Should Patent Owner wish to pursue amendment of the challenged claims in a reissue or reexamination proceeding subsequent to the issuance of this decision, we draw Patent Owner's attention to the April 2019 *Notice Regarding Options for Amendments by Patent Owner Through Reissue or Reexamination During a Pending AIA Trial Proceeding*. *See* 84 Fed. Reg. 16,654 (Apr. 22, 2019). If Patent Owner chooses to file a reissue application or a request for reexamination of the challenged patent, we remind Patent Owner of its continuing obligation to notify the Board of any such related matters in updated mandatory notices. *See* 37 C.F.R. § 42.8(a)(3), (b)(2).

IV. ORDER

In consideration of the foregoing, it is hereby:

ORDERED that claims 7–13 and 15–17 of the ’400 patent have been shown to be unpatentable by a preponderance of the evidence; and

FURTHER ORDERED that any party seeking judicial review must comply with the notice and service requirements of 37 C.F.R. § 90.2.

Samsung Ex. 1098, p. 69
Samsung Electronics Co., Ltd. v. Netlist, Inc., IPR2023-00455

FOR PETITIONER:

Naveen Modi
Joseph Palys
Mark Consilvio
PAUL HASTINGS
naveenmodi@paulhastings.com
josephpalys@paulhastings.com
markconsilvio@paulhastings.com

FOR PATENT OWNER:

Stephen T. Schreiner
James T. Carmichael
Stephen McBride
Minghui Yang
CARMICHAEL IP, PLLC
schreiner@carmichaelip.com
jim@carmichaelip.com
stevemcbride@carmichaelip.com
mitch@carmichaelip.com

Jason A. Engel
Katherine L. Allor
Dennis J. Majewski
K&L GATES LLP
jason.engel.ptab@klgates.com
katy.allor@klgates.com
dennis.majewski@klgates.com