UNITED STATES PATENT AND TRADEMARK OFFICE

BEFORE THE PATENT TRIAL AND APPEAL BOARD

CELLTRION, INC.,
Petitioner,

v.

REGENERON PHARMACEUTICALS, INC.,
Patent Owner.

Patent No. 10,464,992

Inter Partes Review No. IPR2023-00462

PATENT OWNER'S RESPONSE - REDACTED

TABLE OF CONTENTS

I. INTRODUCTION 1
II. BACKGROUND 4
A. Formulation of Biologic Drugs 4
B. Prior VEGF Antagonists 8
C. Fusion Proteins and Regeneron's VEGF Traps 8
D. The '992 Patent 10
III. THE ASSERTED GROUNDS 11
A. Fraser (Ex.1009) 11
B. Wulff (Ex.1016) 12
C. Holash (Ex.1010) 13
D. '319 Publication (Ex.1029) 13
E. '309 Publication (Ex.1027) 14
IV. LEVEL OF ORDINARY SKILL IN THE ART 15
V. CLAIM CONSTRUCTION 16
A. "A Vial" 16
VI. GROUND 1 – PETITIONER HAS NOT SHOWN BY A PREPONDERANCE OF THE EVIDENCE THAT FRASER ANTICIPATES ANY CHALLENGED CLAIM 18
A. Fraser Does Not Disclose SEQ ID NO:4 in the Claimed Formulation (Claims 4-7 and 13-16) 20
B. Petitioner Does Not Show that Fraser's Formulation Necessarily Meets the Native Conformation Limitations (All Claims) 30
1. Fraser's Formulation Was Frozen, and Dix Does Not Show that a Frozen Formulation Would Meet the Native Conformation Limitation 32
2. The POSA Would Not Have Known the Identity of Fraser's Protein, and Dix Does Not Show that the Range of Possible Proteins Would Meet the Native Conformation Limitation 33

C. Fraser Does Not Disclose that the VEGF Trap Protein It Tested Was Created in CHO Cells (All Claims) 35

D. Fraser Does Not Disclose a Vial (Claims 1-9).....39

E. Fraser's Buffer Is Not Phosphate (Claims 9 and 18) 42

VII. GROUND 2 – PETITIONER DOES NOT SHOW THAT THE CLAIMS ARE OBVIOUS 43

A. The POSA Would Not Have Used Fraser's Formulations as a Starting Point to Develop Stable VEGF Trap Formulations (All Claims) 44

B. The POSA Would Not Be Motivated to Use SEQ ID NO:4 (Claims 4-7 at 13-16) 47

C. Petitioner Fails to Show that the POSA Would Reasonably Expect to Achieve the Native Conformation Limitations, Either Inherently Upon Combining VEGF $Trap_{R1R2}$ with Fraser's Formulation or Through Further Optimization 48

1. Petitioner Cannot Rely on Inherency for the Native Conformation Limitation 48

a) The Board's Reliance on *In re Best* Is Misplaced 50

b) The POSA Would Not Have Expected the Native Conformation Result.....52

c) The POSA Formulating VEGF $Trap_{R1R2}$ in the Formulation of Fraser Would Not Necessarily Achieve the Claimed Stability.....53

2. The POSA Would Not Be Motivated to Optimize the Formulation to Achieve 98% Native Conformation with a Reasonable Expectation of Success 54

a) Lack of Motivation 54

b) No Reasonable Expectation of Success.....58

c) No Motivation or Expectation of Success for 99% Native Conformation (Claims 2 and 11) 61

D. Petitioner's References Do Not Render Obvious the Use of a Phosphate Buffer (Claims 9 and 18) 62

VIII. CONCLUSION.....64

TABLE OF AUTHORITIES

Page(s)

Cases

Allergan, Inc. v. Apotex Inc.,
754 F.3d 952 (Fed. Cir. 2014) .....*passim*

Amazon.com, Inc. v. Jumpsport, Inc.,
IPR2018-00715, 2018 WL 4263376 (P.T.A.B. Sept. 6, 2018) 38

Amgen, Inc. v. Alexion Pharms.,
IPR2019-00741, 2019 WL 4132685 (P.T.A.B. Aug. 30, 2019).....31, 41

In re Best,
562 F.2d 1252 (C.C.P.A. 1977) 50, 51, 52

Catalina Mktg. Int'l, Inc. v. Coolsavings.com, Inc.,
289 F.3d 801 (Fed. Cir. 2002) 16

Cephalon, Inc. v. Watson Labs., Inc. (In re Armodafinil Patent Litig. Inc.),
939 F. Supp. 2d 456 (D. Del. 2013).....59

In re Cortright,
165 F.3d 1353 (Fed. Cir. 1999) 40

Dynamic Drinkware, LLC v. Nat'l Graphics, Inc.,
800 F.3d 1375 (Fed. Cir. 2015) 29

Genus Plc v. Inguran,
IPR2021-01027, 2022 WL 17532274 (P.T.A.B. Dec. 8, 2022).....22, 23, 37

In re Hedges,
783 F.2d 1038 (Fed. Cir. 1986) 64

Honeywell Int'l Inc. v. Mexichem Amanco Holding S.A. De C.V.,
865 F.3d 1348 (Fed. Cir. 2017) 49, 51

HTC Corp. v. Cellular Commc'ns Equip., LLC,
877 F.3d 1361 (Fed. Cir. 2017) 20

Merck Sharp & Dohme Corp. v. Wyeth LLC,
No. IPR2017-00380, 2020 WL 6533129 (P.T.A.B. Nov. 5, 2020).....49, 52

Millennium Pharms., Inc. v. Sandoz Inc.,
862 F.3d 1356 (Fed. Cir. 2017) 49

Novartis Pharms. Corp. v. Accord Healthcare Inc.,
387 F. Supp. 3d 429 (D. Del. 2019).....16

In re Oelrich,
666 F.2d 578 (C.C.P.A. 1981) 19

Okajima v. Bourdeau,
261 F.3d 1350 (Fed. Cir. 2001) 15

Organik Kimya AS v. Rohm & Haas Co.,
873 F.3d 887 (Fed. Cir. 2017) 20

PAR Pharm., Inc. v. TWI Pharms., Inc.,
773 F.3d 1186 (Fed. Cir. 2014) 51

PersonalWeb Techs., LLC v. Apple, Inc.,
917 F.3d 1376 (Fed. Cir. 2019) 19, 30, 41, 42

Phillips v. AWH Corp.,
415 F.3d 1303 (Fed. Cir. 2005) 18

Reactive Surfaces Ltd., LLP v. Lg Chem Ltd.,
No. IPR2018-01520, 2020 WL 889367 (P.T.A.B. Feb. 24, 2020).....50

Teleflex, Inc. v. Ficosa N. Am. Corp.,
299 F.3d 1313 (Fed. Cir. 2002) 22, 37

TQ Delta, LLC v. CISCO Sys., Inc.,
942 F.3d 1352 (Fed. Cir. 2019) 44

UCB, Inc. v. Accord Healthcare, Inc.,
201 F. Supp. 3d 491 (D. Del. 2016), *aff'd*, 890 F.3d 1313 (Fed. Cir. 2018) 42

Statutes

35 U.S.C. § 102 51

35 U.S.C. § 103 51

Exhibit List for *Inter Partes* Review of U.S. Patent No. 10,464,992

Exhibit Description	Exhibit #
Declaration of Dr. Alexander M. Klibanov	2001
Dr. Alexander M. Klibanov *curriculum vitae*	2002
AVASTIN® Label (rev. Sept. 2011)	2003
Declaration of David M. Brown, M.D., *Mylan Pharms. Inc. v. Regeneron Pharms., Inc.*, IPR2021-00881, Ex. 2050 (Feb. 10, 2022)	2004
MACUGEN® Label (rev. Jul. 2011)	2005
MACUGEN® FDA Approval Letter (Dec. 17, 2004)	2006
AVASTIN® FDA Approval Letter (Feb. 26, 2004)	2007
LUCENTIS® Label (rev. June 2010)	2008
Kyla R. Rodgers & Richard C. Chou, *Therapeutic Monoclonal Antibodies and Derivatives: Historical Perspectives and Future Directions*, 34 BIOTECHNOLOGY ADVANCES 1149 (2016)	2009
Adis R&D Profile, *Aflibercept: AVE 0005, AVE 005, AVE0005, VEGF Trap – Regeneron, VEGF Trap (R1R2), VEGF Trap-Eye*, 9 DRUGS R&D 261 (2008)	2010
Quan Dong Nguyen et al., *A Phase I Trial of an IV-Administered Vascular Endothelial Growth Factor Trap for Treatment in Patients with Choroidal Neovascularization due to Age-Related Macular Degeneration*, 113 OPHTHAMOLOGY 1522 (2006).	2011
EYLEA® Label (rev. d Nov. 2011)	2012
U.S. Patent Publication No. 2006/0058234 to Daly et al.	2013
FDA, GUIDANCE FOR INDUSTRY: Q1A(R2) STABILITY TESTING OF NEW DRUG SUBSTANCES AND PRODUCTS (rev. 2, 2003)	2014
PHARMACEUTICAL FORMULATION DEVELOPMENT OF PEPTIDES AND PROTEINS (Sven Frokjaer & Lars Hovgaard, eds., 2000)	2015
Jonas L. Fast et al., *Physical Instability of a Therapeutic Fc Fusion Protein: Domain Contributions to Conformational and Colloidal Stability*, 48 BIOCHEMISTRY 11724 (2009)	2016

ANTIBODY FUSION PROTEINS (Steven M. Chamow & Avi Ashkenazi, eds. 1999)	2017
Hussein Hollands et al., *Short-Term Intraocular Pressure Changes After Intravitreal Injection of Bevacizumab*, 42 CAN. J. OPHTHAMOLOGY 807 (2007)	2018
Domenico Sanfelice et al., *Cold Denaturation Unveiled: Molecular Mechanism of the Asymmetric Unfolding of Yeast Frataxin*, 16 CHEMPHYSCHEM 3599 (2015)	2019
Sven Frokjaer & Daniel E. Otzen et al., *Protein Drug Stability: A Formulation Challenge*, 4 NATURE REVIEWS DRUG DISCOVERY 298 (2005)	2020
Somatropin, THE UNITED STATES PHARMACOPEIA 1993 (29th rev., official from Jan. 1, 2006)	2021
International Patent Publication No. 2006/104852 to Dix et al.	2022
U.S. Patent Publication No. 2006/0217311 to Dix et al.	2023
List of References cited by Applicant and Considered by Examiner, U.S. Patent App. No. 16/582,486 (received Mar. 2, 2021 and considered Apr. 12, 2021)	2024
Third-Party Submission Under 37 CFR 1.290, U.S. Patent App. No. 16/582,486 (considered Dec. 31, 2020)	2025
U.S. Patent No. 11,066,458 to Furfine et al.	2026
Russell F. Doolittle, *The Multiplicity of Domains in Proteins*, 64 ANN. REV. BIOCHEMISTRY 1995	2027
Liliana M. Sampaleanu et al., *Three-Dimensional Structure of the Argininosuccinate Lyase Frequently Complementing Allele Q286R*, 40 BIOCHEMISTRY 15,570 (2001)	2028
Arvind K. Pandey et al., Mechanisms of VEGF (Vascular Endothelial Growth Factor) Inhibitor–Associated Hypertension and Vascular Disease, 71 Hypertension, Dec. 26, 2017	2029
Abhibav A. Shukla & Uwe Gottschalk, *Downstream Processing of Fc-Fusion Proteins*, in THERAPEUTIC FC-FUSION PROTEINS (S.M. Chamow et al., eds. 2014)	2030

Terri Davis-Smyth et al., *The Second Immunoglobulin-Like Domain of the VEGF Tyrosine Kinase Receptor Flt-1 Determines Ligand Binding and May Initiate a Signal Transduction Cascade*, 15 EMBO J. 4919 (1996).	2031
P17948 VGFR1_Human, available at https://www.uniprot.org/uniprotkb/P17948/entry	2032
P17948 VGFR1_Human, Entry Version 140 (txt) (Jan. 11, 2011), available at https://rest.uniprot.org/unisave/P17948?format=txt&versions=140	2033
Dan Lu et al., *Identification of the Residues in the Extracellular Region of KDR Important for Interaction with Vascular Endothelial Growth Factor and Neutralizing Anti-KDR Antibodies*. 275 J. BIOLOGICAL CHEMISTRY 14321 (2000)	2034
Matthew C. Franklin et al., *The Structural Basis for the Function of Two Anti-VEGF Receptor 2 Antibodies*, 19 STRUCTURE 1097 (2011)	2035
P35968 VGFR2_Human, available at https://www.uniprot.org/uniprotkb/P35968/entry	2036
P35968 VGFR2_Human, Entry Version 127 (txt) (Jan. 11, 2011), available at https://rest.uniprot.org/unisave/P35968?format=txt&versions=127	2037
Clifford R. Robinson & Robert T. Sauer, *Optimizing the Stability of Single-chain Proteins by Linker Length and Composition Mutagenesis*, 95 PROC. NATL. ACAD. SCI. USA, 5929 (1998)	2038
Bei Tong et al., *Interdomain Linker Effect on the Mechanical Stability of Ig Domains in Titin*, 23 INT'L J. MOLECULAR SCI. 9836 (2022)	2039
Xiaoying Chen et al., *Fusion Protein Linkers: Property, Design and Functionality*. 65 ADVANCED DRUG DELIVERY REV. 1357 (2013)	2040
Jose I. Casal et al., *Subunit Interface of Triosephosphate Isomerase: Site-Directed Mutagenesis and Characterization of the Altered Enzyme*, 26 BIOCHEMISTRY 1258 (1987)	2041
Tzu-Jing Yang et al., *D614G Mutation in the SARS-CoV-2 Spike Protein Enhances Viral Fitness by Desensitizing It to Temperature-Dependent Denaturation*, 197 J. BIOL.	2042

CHEM. 101, 238 (2021)	
BIOCHEMISTRY (Jeremy M. Berg et al., eds., 5th ed. 2002)	2043
Declaration of Daralyn J. Durie in Support of this Motion for Admission *Pro Hac Vice* ("Durie Decl.")	2044
Declaration of Kira A. Davis in Support of this Motion for Admission *Pro Hac Vice* ("Davis Decl.")	2045
Default Protective Order	2046
Expert Declaration of Dr. Alexander M. Klibanov (Nov. 2, 2023)	2047
Vila-Perelló, M. & Muir, T. W., *Biological Applications of Protein Splicing*, 143(2) CELL 191 (2010).	2048
Kirikoshi, R. et al., *Phosphate-Catalyzed Succinimide Formation From Asp Residues: A Computational Study of the Mechanism*, 19(2) INT'L J. MOLECULAR SCIS. 637 (2018).	2049
Trial Transcript (unsealed portions), *Regeneron Pharms., Inc. v. Mylan Pharms. Inc.*, No. 1:22-cv-00061-TSK-JPM (N.D.W. Va., June 12–23, 2023).	2050
U.S. Patent Publication No. 2003/0180287 to Gombotz et al.	2051
Jørgensen, J. T. et al., *Pain Assessment of Subcutaneous Injections*, 30(7-8) ANNALS OF PHARMACOTHERAPY 729 (1996)	2052
Wang, W., *Protein Aggregation and Its Inhibition in Biopharmaceutics*, 289(1-2) INT'L J. OF PHARMS. 1 (2005)	2053
Transcript of Oral Deposition of Dr. Ralph Tarantino (October 13, 2023)	2054
LUCENTIS® FDA Approval Letter (June 30, 2006)	2055
Vial, DORLAND'S ILLUSTRATED MEDICAL DICTIONARY (30th ed., 2003)	2056
Vial, TABER'S CYCLOPEDIC MEDICAL DICTIONARY (20th ed. 2001)	2057
Vial, MOSBY'S MEDICAL, NURSING & ALLIED HEALTH DICTIONARY (6th ed. 2002)	2058
Vial, DICTIONARY OF PHARMACY (1st ed. 2004)	2059
Arakawa, T., et al., *Factors Affecting Short-Term and Long-Term Stabilities of Proteins*, 46(1-3) ADVANCED DRUG DELIVERY REVS. 307 (2001)	2060

Tang, X., & Pikal, M. J., *Design of Freeze-Drying Processes For Pharmaceuticals: Practical Advice*, 21(2) PHARM. RSCH. 191 (2004).	2061
Cao, E. et al., *Effect of Freezing and Thawing Rates on Denaturation of Proteins in Aqueous Solutions*, 82(6) BIOTECH. & BIOENGINEERING 684 (2003).	2062
Brange, J., et al., *Toward Understanding Insulin Fibrillation*, 86(5) J. PHARM. SCIS. 517 (1997)	2063
Robinson, N. E., & Robinson, A. B., MOLECULAR CLOCKS: DEAMIDATION OF ASPARAGINYL AND GLUTAMINYL RESIDUES IN PEPTIDES AND PROTEINS (2004)	2064
Robinson, N. E., et al., *Structure-Dependent Nonenzymatic Deamidation of Glutaminyl and Asparaginyl Pentapeptides*, 63(5) J. PEPTIDE RSCH. 426 (2004)	2065
Solá, R. J. & Griebenow, K., *Effects of Glycosylation on the Stability of Protein Pharmaceuticals,* 98(4) J. PHARM. SCIS. 1223 (2009)	2066
International Patent Publication No. WO/2006/047325 to Shams	2067
U.S. Patent Publication No. 2004/0014667 to Daly et al.	2068
ENBREL® Label (rev. Sept. 27, 2004)	2069
HUMIRA® Label (rev. July 30, 2004)	2070
NEULASTA® Label (rev. Jan. 31, 2002)	2071
Bakri, S. J. et al., *Six-Month Stability of Bevacizumab (Avastin) Binding to Vascular Endothelial Growth Factor After Withdrawal into a Syringe and Refrigeration or Freezing*, 26(5) RETINA 519 (2006)	2072
U.S. Food and Drug Administration, *Guideline for Industry: Quality of Biotechnological Products: Stability Testing of Biotechnological/Biological Products*, 61 Fed. Reg. 36466 (1996), https://www.fda.gov/media/71441/download	2073
Bayer, *Assessment of Long Term Treatment with Testosterone Undecanoate in Males with Hypogonadism,* NCT00220298 (rev. Dec. 30, 2014), https://clinicaltrials.gov/study/NCT00220298?a=11&tab=table	2074

Stanford University, *High-dose Sequential Therapy and Single Autologous Transplantation for Multiple Myeloma*, NCT00349778 (rev. Dec. 12, 2017), https://clinicaltrials.gov/study/NCT00349778?tab=table	2075
Lidocaine Hydrochloride and Dextrose (injection, solution) Label, Hospira, Inc (rev. June 2006)	2076
Fentanyl Citrate (injection, solution) Label, Baxter Healthcare Corporation (rev. Sept. 2006)	2077
ATGAM® Label (rev. Apr. 2010)	2078
ATGAM® Label (rev. Sept. 2023)	2079
McIlvaine, T. C., *A Buffer Solution for Colorimetric Comparison*, 49(2) J. BIO. CHEMISTRY 183 (1921)	2080
Zacchigna, M., et al., *Improvement of warfarin biopharmaceutics by conjugation with poly (ethylene glycol)*, 23(4) EUR. J. PHARM. SCIS. 379 (2004)	2081
Yamaguchi, S., et al., *Approval Success Rates of Drug Candidates Based on Target, Action, Modality, Application, and Their Combinations,* 14(3) CLINICAL & TRANSLATIONAL SCI. 1113 (2021)	2082
Svendsen, O., et al., *Intramuscular Injection of Hypertonic Saline:* In Vitro *and* In Vivo *Muscle Tissue Toxicity and Spinal Neurone C-Fos Expression*, 97(1) BASIC & CLIN. PHARMACOLOGY & TOXICOLOGY 52 (2005)	2083
Dupont, J. et al., *Phase I and Pharmacokinetic Study of VEGF Trap Administered Subcutaneously (sc) to Patients (pts) with Advanced Solid Malignancies*, 22(14) J. CLIN. ONCOLOGY 3009 (2004)	2084
Shannon, E. et al., *Etanercept (Enbrel®) Alternative Storage at Ambient Temperature*, 9 CLIN. PHARMACOLOGY: ADVANCES & APPLICATIONS 87 (2017)	2085
Rougeot, C. et al., *Comparative Study of Biosynthetic Human Growth Hormone Immunogenicity in Growth Hormone Deficient Children*, 35(2) HORMONE RSCH. IN PAEDIATRICS 76 (1991)	2086
Mohan, C., Buffers: A guide for the preparation and use of buffers in biological systems (2003)	2087

Chelius, D. et al., *Identification and characterization of deamidation sites in the conserved regions of human immunoglobulin gamma antibodies*, 77(18) ANALYTICAL CHEM. 6004 (2005)	2088
Tyler-Cross, R., & Schirch, V., *Effects of Amino Acid Sequence, Buffers, and Ionic Strength on the Rate and Mechanism of Deamidation of Asparagine Residues in Small Peptides*, 266(33) J. BIO. CHEM. 22549 (1991)	2089
Nema, S. et al., *Excipients and Their Use in Injectable Products*, 51(4) PDA J. PHARM. SCI. & TECH. 166 (1997)	2090
Samuelsen, L. et al., *Buffer solutions in drug formulation and processing: how pKa values depend on temperature, pressure and ionic strength*, 560 INTERNATIONAL JOURNAL OF PHARMACEUTICS 357 (2019)	2091
Pfefferkorn, C. M. et al., *Effects of pH on Aggregation Kinetics of the Repeat Domain of a Functional Amyloid, Pmel17*, 107(50) PNAS 21447 (2010)	2092
Hansson, K., & Stenflo, J., *Post-Translational Modifications in Proteins Involved in Blood Coagulation*, 3(12) J. THROMBOSIS & HAEMOSTASIS 2633 (2005)	2093
Gellissen, G. et al., PRODUCTION OF RECOMBINANT PROTEIN: NOVEL MICROBIAL AND EUKARYOTIC EXPRESSION SYSTEMS, KEY AND CRITERIA TO THE SELECTION OF AN EXPRESSION PLATFORM (2005)	2094
Blodgett, J. K., et al. *Specific Cleavage of Peptides Containing an Aspartic Acid (Beta.-Hydroxamic Acid) Residue*, 107(14) J. AM. CHEM. SOC'Y 4305 (1985)	2095

**Patent Owner's Exhibits 2001 - 2046 were previously filed and are listed again here based on 37 C.F.R. § 42.63.*

***Patent Owner's Exhibits 2047-2095 are newly filed.*

I. INTRODUCTION

Petitioner cannot carry its burden to show by a preponderance of the evidence that any of the challenged claims of Patent No. 10,464,992 are unpatentable, because the prior art fails to disclose or make obvious multiple limitations of the challenged claims.

In its Decision on Institution, the Board preliminarily agreed with Petitioner's argument that the POSA would know that the VEGF inhibitor used in formulations described by Fraser was aflibercept, which was tested in a later-published Regeneron patent filing. The Board accepted Petitioner's argument that the POSA would recognize that the name "VEGF $Trap_{R1R2}$" as used in Fraser refers to one, and only one, molecule in all instances.

The record, which is now more fully developed, does not support this assertion. While it is true that Fraser only used one protein in animals, the prior art as of June 2006 would not have allowed a POSA to determine *which specific* protein was used. Despite Petitioner and Dr. Tarantino's repeated references to the alleged discussion of "aflibercept" in the cited prior art, none of the prior art uses the term "aflibercept." As a result, the question of how a POSA would understand and interpret the Fraser reference implicates fundamentally different questions regarding protein structure and sequence than those that are at issue in other co-

pending proceedings, which involve a much-later priority date and different references.[1]

As of June 16, 2006, the agreed-upon priority date in this proceeding, a POSA would have recognized that a VEGF $TRAP_{R1R2}$ protein refers to a genus of fusion proteins that inhibits VEGF activity by "trapping" it with portions of VEGF Receptor 1 ("R1") and Receptor 2 ("R2"). But none of the prior art limits the term VEGF $Trap_{R1R2}$ to a single protein or sequence in all instances, as Petitioner contends. Therefore, Petitioner cannot show that VEGF $Trap_{R1R2}$ in Fraser is *necessarily* the same protein as in Dix, which Petitioner must rely on to provide the

[1] *E.g.*, in IPR2021-00881, the Board concluded that the Dixon reference "inherently discloses the amino acid sequence and the nucleic acid sequence of VEGF Trap-Eye," based on its disclosure that "VEGF Trap-Eye and aflibercept (the oncology product) have the same molecular structure." *See id.*, Paper 94 at 32-35. But that decision is irrelevant and inapplicable here, where the priority date is June 16, 2006, years before the January 2011 priority date of the patent at issue in IPR2021-00881, and years before Dixon published. No prior art cited by Petitioner in this proceeding links the structure of VEGF-$Trap_{R1R2}$ to aflibercept, or limits the potential structures for VEGF-$Trap_{R1R2}$ to aflibercept.

claimed stability limitations that are missing from the prior art. On this basis alone, the Petition fails.

But even if the POSA recognized that Fraser describes aflibercept formulations (knowledge the prior art does not supply), Petitioner has still not carried its burden, because Fraser fails to disclose several other limitations of the challenged claims. For example, Fraser does not disclose the host cell used to produce the VEGF $Trap_{R1R2}$ protein or the container the formulations were stored in (whether it was a vial, as claimed, or another container like a syringe or ampoule). Even if these elements were "probably" present in Fraser, they are not "necessarily" present as inherency law requires. Moreover, the Fraser formulations include McIlvane buffer, a blend of citrate and phosphate, which the POSA would recognize is not the same as the "phosphate" buffer required in two of the challenged claims.

Petitioner also fails to establish that Fraser would provide the POSA with a reasonable expectation of success. Fraser itself discloses that its formulations needed to be disposed of *after just two weeks*. In view of this disclosure, the POSA would *not* reasonably expect to have less than 2% aggregation *after two months*. Even if the POSA were inclined to try to adjust the formulation to attain stability levels as high as 98-99% as required by the challenged claims, the POSA would face substantial uncertainty, and would know that every protein has its own

unique physiochemical properties, which may present unique stability concerns and challenges.

Indeed, after Fraser's formulations were tested in monkeys (to study ovarian effects, not stability), Regeneron developed and patented new formulations for its VEGF Trap drug candidates. Regeneron's new and inventive formulations differed from the earlier formulation used by Fraser in several respects: lower concentration of solutes (osmolarity), higher pH, use of phosphate buffer in place of citrate-phosphate buffer, and very low levels of aggregation over time. It was on this basis that the Patent Office allowed Regeneron's claims. Now, 18 years later, Petitioner relies on Regeneron's own work to argue that the Patent Office got it wrong. It did not, and for the reasons set forth herein, the patentability of the challenged claims should be upheld.

II. BACKGROUND

A. Formulation of Biologic Drugs

The formulation process involves a series of challenges, competing priorities and constraints, such as the required dose, the route of delivery, and more. Ex.2047 ¶¶53-56; Ex.1006, 2, 4. The formulator must develop a formulation within these constraints, while ensuring that the formulation is sufficiently stable. Ex.2047 ¶¶51-52; *see* Ex.2014, 12-13. What constitutes a sufficiently stable formulation is protein and product specific. Ex.2047 ¶52; Ex.1047, 5-6.

One fundamental challenge in formulating proteins is that each protein has unique properties. Ex.2047 ¶¶35-44; Ex.1013, 145. Thus, while it is possible to generalize the different ways in which proteins may degrade and contemplate ways to potentially minimize degradation, the formulator must manage stability concerns, while at the same time meeting efficacy and safety requirements. Ex.2047 ¶¶50, 51-62, 180.

While proteins are often represented as simple structures in schematics, *see, e.g.*, Ex.1002 ¶71, in reality, proteins are delicate, three-dimensional structures, composed of a sequence of amino acids folded into a specific shape, referred to as the protein's native conformation. Ex.2047 ¶¶64, 89; Ex.2015, 53-54; *see* Ex.1002 ¶22. A protein will typically not maintain its native conformation for long in solution without additives or excipients to help preserve it. Indeed, proteins can experience various types of physical instability (changes in physical conformation) or chemical instability (changes to the amino acids via chemical reactions). Ex.2047 ¶27; Ex.1001, 5:35-44; Ex.2015, 33-34. One type of chemical instability occurs via proteolytic cleavage, in which the peptide bonds holding together the amino acid sequences of a protein are broken, typically resulting in the formulation of low molecular weight protein fragments. Ex.2047 ¶¶29-30; Ex.1047, 21; Ex.2048, 2; Ex.2049, 2. A common type of physical instability is called aggregation. Ex.2047 ¶28. Aggregation involves proteins clumping together with

one another in either a folded, misfolded, or unfolded form. Ex.2047 ¶28; Ex.2015, 62-64; Ex.1047, 21; Ex.2050, 489:4-14.

As the prior art indicates, "[e]very protein has unique physicochemical characteristics and the potential to behave differently stability-wise." Ex.1013, 145; Ex.2047 ¶35. Changes of even a few amino acids can affect protein stability, and the extent of aggregation observed. Ex.2047 ¶¶35-44; *e.g.*, Ex.2015, 68. In addition to the structure of the protein itself, the ratio and identity of other excipients, along with storage conditions, can impact the extent of aggregation observed. Ex.2015, 63-64; Ex.2047 ¶¶46-49.

One way in which the extent of aggregation and cleavage were measured at the time of the invention was through size-exclusion chromatography, which measures the extent of aggregation and cleavage by separating different molecular weight compounds from one another. Ex.1002 ¶¶79-80; Ex.2047 ¶89. In art relied upon by Petitioner, "stable" formulations are defined as those containing less than 10% aggregates, *i.e.*, more than 90% of the protein was deemed to be in its native conformation. Ex.2047 ¶169; Ex.1030, 8:31-33; Ex.1026 ¶63; Ex.1024 ¶36; Ex.1025 ¶25; *see* Ex.2051 ¶55; Ex.1005, 4, Table 2.

The desire for a stable formulation may be in tension with other formulation requirements. For example, the route of administration may constrain the dose volume. The volume of a subcutaneous injection is limited, and the volume of

intravitreal injection, which involves injections into a small space in the back of the eye, is even more limited. Ex.2047 ¶53; Ex.2052, 1; Ex.2018. But if the POSA considered using a higher protein concentration, for example to improve efficacy, that would be generally expected to lead to more aggregation and a resultingly shorter shelf life. Ex.2047 ¶47; Ex.1002 ¶102 ("formulations with lower protein concentrations tend to exhibit *less* aggregation than ones with higher concentrations.") (citing Ex.1006, Table 6); *see* Ex.1013, 146 ("rates of degradation typically vary as a function of protein concentration."); Ex.2053, 7, 9; Ex.2050, 470:8-14. Consistent with this recognition, the POSA would also recognize that for each potential lever the formulator might adjust, there is typically a corresponding tradeoff. Ex.2047 ¶56.

Ultimately, regardless of the specific protein and specific protein formulation, some degradation will occur. "For most proteins, including relatively stable ones, at least some degradation should be expected even during refrigerated storage." Ex.1006, 9; *see* Ex.2047 ¶62. And success is by no means guaranteed. This reality is reflected by the fact that companies like Regeneron, Amgen, and Hoffman La Roche (where Petitioner's expert Dr. Tarantino worked for decades) employ entire formulation teams, whose function is to determine which formulations work and which do not. *See* Ex.2054, 153:14-159:22.

B. Prior VEGF Antagonists

Vascular endothelial growth factor ("VEGF") is a protein that regulates angiogenesis, or the growth of blood vessels. Ex.1002, ¶54; *see generally* Ex.2047 ¶65. In some cancers, VEGF enables the development of new blood vessels in a growing tumor. Ex.1008, 967; Ex.1010, 11393. In the late 1990s, VEGF was a therapeutic target for conditions involving vascular proliferation. *See* Ex.2047 ¶65. By June 2006, there were multiple VEGF blockers on the market, including Avastin (a monoclonal antibody). Ex.2006; Ex.2007. Another, Lucentis (an antibody fragment), had been submitted for FDA approval and was approved on June 30, 2006. Ex.2055.

C. Fusion Proteins and Regeneron's VEGF Traps

Monoclonal antibodies and antibody fragments were the leading approach for VEGF blockers in 2006. A different class of recombinant proteins, called fusion proteins, was less well developed at that time. Unlike antibodies, fusion proteins do not occur in nature and are composed of domains or portions of one protein fused to domains or portions from other, different protein(s). Ex.2047 ¶67. Rather than focus on anti-VEGF antibodies, Regeneron developed and tested novel anti-VEGF fusion proteins composed of VEGF receptor domain sequences fused to the Fc sequence of an antibody, which could *catch*, *hold*, and *block* (*i.e.*, "Trap") circulating VEGF. *See* Ex.2010, 1; *see generally* Ex.2047 ¶69.

Regeneron investigated VEGF Trap proteins for multiple indications, including cancers and angiogenic eye disorders. Ex.2011; Ex.1010; *see also* Ex.1009. Different VEGF Traps used different combinations of VEGF receptor domains, fused to one another via various "multimerizing components," such as the Fc region of the antibody. In addition to varying the specific receptor domain sequences and multimerizing component, Regeneron investigated VEGF Traps with different linking sequences between the protein domains. Ex.2013; Ex.2047 ¶69; Ex.2054, 207:22-208:16 (acknowledging that the term "VEGF Trap" does not refer to a specific sequence and is "not very descriptive").

Among these designs, Regeneron developed VEGF Traps that included domain 2 of VEGF **R**eceptor **1** and domain 3 of VEGF **R**eceptor **2**, which abbreviates to "VEGF $\text{Trap}_{\text{R1R2}}$." Ex.2047 ¶69. That particular genus of VEGF Traps was found to have superior pharmacokinetic and pharmacodynamic properties to earlier VEGF Trap designs. Ex.2047 ¶77, 160; Ex.1010; Ex.1029, Example 29.

Regeneron proceeded with animal studies on its VEGF Trap proteins, some of which are described in Fraser and Wulff. Each of Fraser and Wulff discloses that the protein studied was a "VEGF $\text{Trap}_{\text{R1R2}}$," "VEGF Trap R1R2," or "R1R2," indicating that the protein comprised domain 2 of VEGF R1 and domain 3 of

VEGF R2,[2] but neither reference discloses the specific sequence nor otherwise identifies which specific VEGF $Trap_{R1R2}$ protein was used. Ex.2047 ¶¶72, 74-75; *see* Ex.2054, 187:7-12, 190:10-15.

D. The '992 Patent

The '992 patent reflects Regeneron's success in developing stable formulations for its novel VEGF Trap proteins and has a much earlier priority date than some of the other Regeneron patents that have been challenged before the Board.[3] The challenged claims cover protein formulations including a VEGF $Trap_{R1R2}$ protein produced in a Chinese hamster ovary ("CHO") cell, an organic co-solvent, a buffer, and a stabilizing agent. Each claim of the '992 patent also includes a limitation drawn to a specific stability endpoint: at a minimum, that "at least 98% of the VEGF antagonist is present in native conformation following storage at 5ºC for two months as measured by size exclusion chromatography."

---

[2] Fraser refers to the protein as the "VEGF Trap," or "VEGF $Trap_{R1R2}$." Ex.1009, 114. Wulff refers to the protein as "VEGF Trap R1R2," "VEGF trap," "VEGF Trap," or "R1R2." Ex.1016, 2797.

[3] The priority date of the '992 patent is June 16, 2006, in contrast to the January 13, 2011 priority date for the challenged patents in IPR2021-00881 and IPR2022-1226.

During prosecution, the Patent Office concluded that the addition of this stability limitation placed every challenged claim in condition for allowance. *See* Ex.1004, 90-92, 93-94, 110.

III. THE ASSERTED GROUNDS

The Petition includes two grounds. Ground 1 alleges anticipation by Fraser (Ex.1009). Ground 2 alleges obviousness based on *seven* different references. The references referred to by Petitioner as "Key Prior Art," Pet. 23, are summarized below.

A. Fraser (Ex.1009)

Fraser published in November 2004, and reports the effects of intravenous dosing of a VEGF antagonist that it calls "VEGF Trap" or "VEGFTrap$_{R1R2}$" on ovarian function in macaque monkeys. Ex.2047 ¶72; Ex.1009, 1114-15, 1121-22. Fraser does not explicitly disclose the sequence of the "VEGF Trap" protein used in its studies. Ex.2047 ¶72. Instead, consistent with the general "VEGF Trap $_{R1R2}$" nomenclature, Fraser describes the protein as "compris[ing] Ig domain 2 of human VEGF-R1 and Ig domain 3 of human VEGF-R2, expressed in sequence with the human Fc." Ex.1009, 1115; Ex.2047 ¶72. Fraser does not disclose what host cell line was used to produce this "VEGF Trap." Ex.2047 ¶72.

Fraser discloses that the "VEGF Trap" used in the study was formulated "at a concentration of 24.3 mg/ml in 2-ml aliquots in buffer composed of 5 mM

phosphate, 5 mM citrate, 100 mm NaCl (pH 6.0), and 0.1% wt/vol Tween 20, with either 20% glycerol or 20% sucrose." Ex.1009, 1115; Ex.2047 ¶73. All formulations "were stored at –20 C until required, at which time they were thawed. Any compound remaining was stored at 4 C and used within 2 [weeks]." Ex.1009, 1115; Ex.2047 ¶73. Fraser does not disclose any stability data for these formulations. Ex.2047 ¶73.

B. Wulff (Ex.1016)

Wulff published in July 2002, and reports the effects of administering a VEGF antagonist subcutaneously to marmoset monkeys on ovarian function. Ex.2047 ¶74. Like Fraser, it does not disclose the sequence for the protein used in the study and describes it generally as "VEGF Trap," "VEGF Trap R1R2," "VEGF R1R2," or just "R1R2." Ex.2016, 2797, 2801-04, 2805-06; Ex.2047 ¶74. Wulff states that the protein includes "portions of the extracellular, ligand binding domains of the human VEGF receptors Flt-1 (VEGF-R1, Ig domain 2) and KDR (VEGF-R2, Ig domain 3) expressed in sequence with the Fc portion of human IgG," and provides a general schematic diagram of these domains. Ex.2016, 2798, Fig. 1; Ex.2047 ¶¶74-75. Wulff discloses that the "VEGF Trap" used in its studies was expressed in CHO cells, but does not disclose any stability data for any "VEGF Trap" formulations. Ex.2047 ¶¶74, 76.

C. Holash (Ex.1010)

Holash published in August 2002 and is "specifically incorporated by reference in [its] entirety" into the '992 patent. Ex.1001, 1:47-52. Holash discloses pre-clinical trials that assessed the pharmacokinetic and pharmacodynamic properties of several "VEGF-Trap" fusion proteins. Ex.1010, 11393; Ex.2047 ¶77. Holash describes the construction of VEGF Traps in general terms, stating the VEGF receptor domains they contain. Ex.1010, 11193-94; Ex.2047 ¶¶78-79. Holash does not disclose any specific sequences for any of the "VEGF Trap" proteins it describes. Ex.2047 ¶¶78-80. Additionally, Holash does not disclose any specific "VEGF Trap" formulations, nor does it disclose any stability data related to the "VEGF Trap" proteins it describes. Ex.2047 ¶81.

D. '319 Publication (Ex.1029)

The '319 Publication published in December 2000 and describes various modified VEGF Trap proteins, including two proteins "denoted R1R2." Ex.2047 ¶82. Both of these proteins contain an Ig domain 2 of VEGF Receptor 1 ("R1") linked to an Ig domain 3 of VEGF Receptor 2 ("R2") and fused to a portion of the Fc region from an antibody. Ex.2047 ¶82; Ex.1029, 58:22-59:10. While these "R1R2" VEGF Traps include the same VEGF receptor domains and are both classified as "R1R2" proteins (one of the designations used in Wulff too), the '319 Publication confirms that the sequences of the proteins are different. Ex.2047 ¶82.

More specifically, the ’319 Publication discloses that the linking sequences between the domains are different in the two molecules. Ex.2047 ¶82; Ex.1029, 67:7-17. In the protein designated VEGFR1R2-FcΔC1(a), domain 2 of R1 is fused directly to domain 3 of R2. Ex.2047 ¶¶113-116; Ex.1029, Figs. 24A-24C, 22:1-2. In contrast, in the protein designated Flt1D2-Flk1D3-FcΔC1(a), a bridging sequence is present between the two domains. Ex.2047 ¶¶113-116; Ex.1029, Figs. 21A-21C, 21:16-17. The ’319 Publication does not disclose any specific formulations containing these proteins or any stability data. Ex.2047 ¶84. The publication discloses experimental data relating to VEGF Traps expressed in CHO cells, *e.g.*, Ex.1029, 77:6-80:18, as well as in COS cells, Ex.1029, 55:23-56:6. Ex.2047 ¶83. Other portions of the ’319 Publication specify that a range of host cells can be used, including bacterial cells, yeast cells, and other mammalian cells besides CHO cells. Ex.2047 ¶83; Ex.1029, 12:19-26, 94:5-19.

E. ’309 Publication (Ex.1027)

The ’309 Publication published in December 2004, and “relates to methods of promoting regression of tumors and metastases by inhibiting vascular endothelial growth factor (VEGF) activity.” Ex.1027 ¶2; Ex.2047 ¶85. It is not cited by Fraser, Wulff, Holash, or the ’319 Publication.

The ’309 Publication discloses that VEGF-specific fusion proteins may be constructed that include VEGFR1, VEGFR2, and a multimerizing component,

such as an Fc. Ex.1027 ¶24; Ex.2047 ¶86. In specific embodiments, the VEGF Trap used is VEGFR1R2.FcΔC1(a) described in the '319 Publication, which the '309 Publication incorporates by reference. Ex.1027 ¶22; Ex.2047 ¶86. The '309 Publication provides the sequence for VEGFR1R2.FcΔC1(a), which it states is "also termed VEGF $trap_{R1R2}$," Ex.1027 ¶5, but the'309 Publication does not state that VEGFR1R2.FcΔC1(a) is the only protein that is termed "VEGF $trap_{R1R2}$." Ex.2047 ¶86. Like the '319 Publication, the '309 Publication discloses that suitable host cells for producing VEGF Trap proteins "may be a bacterial cell such as *E. coli*, a yeast cell, such as *Pichia pastoris*, an insect cell, such as *Spodoptera frugiperda*, or a mammalian cell, such as a COS, CHO, 293, BHK, or NS0 cell." Ex.1027 ¶26; Ex.2047 ¶86. The '309 Publication does not describe any specific VEGF Trap formulations or provide any stability data. Ex.2047 ¶88.

IV. LEVEL OF ORDINARY SKILL IN THE ART

Patent Owner has used Petitioner's definition of the POSA. Patent Owner does not contest Petitioner's definition of the POSA for purposes of the present proceeding, except to the extent that Petitioner attempts to use the level of skill to bridge gaps in the prior art, which is impermissible. *See Okajima v. Bourdeau*, 261 F.3d 1350, 1355 (Fed. Cir. 2001).

V. CLAIM CONSTRUCTION

For purposes of this proceeding only, Patent Owner does not challenge Petitioner's proposed constructions of "native" or "multimerizing component," Pet. 42.

A. "A Vial"

Independent claim 1 requires a "vial."[4] This term should be afforded its plain and ordinary meaning in the medical field: "a small bottle." Petitioner's general dictionary definition, "a small closed or closable vessel, especially for liquids," is overbroad, because it would encompass other containers, such as a prefilled syringe, which a POSA would recognize as different from vials.

---

[4] Petitioner does not dispute that the preamble is limiting. *See* Pet. 42, 48-50. The preamble recites structure, not just an intended use or purpose. *See Catalina Mktg. Int'l, Inc. v. Coolsavings.com, Inc.*, 289 F.3d 801, 808 (Fed. Cir. 2002). Moreover, claim differentiation supports construing the preamble to be limiting, because otherwise there would be no difference in scope between challenged claims 1-9 and challenged claims 10-18. *See Novartis Pharms. Corp. v. Accord Healthcare Inc.*, 387 F. Supp. 3d 429, 436-37 (D. Del. 2019) (relying in part on claim differentiation to construe a preamble as limiting).

The specification expressly differentiates between vials and pre-filled syringes. Ex.2047 ¶93; Ex.1001, 5:7-9 ("The invention further features ophthalmic formulations provided in a pre-filled syringe or vial…."); *compare* Ex.1001, 8:8-9:25, 9:56-10:19 *with* Ex.1001, 9:27-53, 10:22-50 (reporting the stability of formulations in a "3 ml Glass Vial" and a "Pre-Filled Glass Syringe," respectively). But Petitioner's construction of "vial" would cover pre-filled syringes as well. It is incorrect on this basis alone.

Patent Owner's construction, in contrast, is consistent with both the intrinsic and extrinsic evidence and maintains the distinction between vials and other containers. A "small bottle" is the way in which vials are discussed in the '992 patent. A "small bottle" is also consistent with descriptions of "vial" in the medical and pharmaceutical context. Ex.2047 ¶¶94-96. *Dorland's Illustrated Medical Dictionary* defines a vial as "a small bottle." Ex.2056; Ex.2047 ¶95. The FDA Guidance, cited and relied upon by Petitioner, also differentiates a vial from various other vessels that are not small bottles. Ex.2047 ¶95; Ex.1038, 24 ("An SVP [small volume parenteral] may be packaged in a disposable cartridge, a disposable syringe, a vial, an ampule, or a flexible bag."); *see* Ex.2054, 47:14-20 (agreeing that "these are all different types of packaging that an SVP may be put in" according to the FDA at the time the guidance was published). The definitions in other medical and pharmaceutical dictionaries are consistent with *Dorland's*

while adding detail on the materials commonly used for vials, *e.g.*, glass, glass with a rubber stopper. Ex.2047 ¶96; Ex.2057; Ex.2058; Ex.2059.

Petitioner relies on a general-usage dictionary for its definition of vial. Pet. 42; Ex.1031. But "'a general-usage dictionary cannot overcome art-specific evidence of the meaning' of a claim term." *Phillips v. AWH Corp.*, 415 F.3d 1303, 1322 (Fed. Cir. 2005) (quoting *Vanderlande Indus. Nederland*, 366 F.3d at 1321). Here, the intrinsic and subject-matter specific extrinsic evidence support Patent Owner's proposed construction, and therefore, "vial" should be construed to mean "a small bottle."

VI. GROUND 1 – PETITIONER HAS NOT SHOWN BY A PREPONDERANCE OF THE EVIDENCE THAT FRASER ANTICIPATES ANY CHALLENGED CLAIM

At institution, the Board was persuaded by Petitioner's argument that Fraser discloses the same protein and formulation as Dix, which is not prior art. This unity of disclosure between Fraser and Dix is essential to Petitioner's arguments, because without it, Petitioner has no basis to argue that the prior art discloses the native conformation limitation recited in every challenged claim.

Now, with the benefit of a more fully-developed record, supported by the expert declaration of Dr. Klibanov, the hindsight-based approach taken by Petitioner is laid bare. None of the prior art refers to "aflibercept," none of the prior art discloses the sequence of aflibercept and refers to it as such, and none of

the prior art discloses stability of the formulations described in Fraser. Indeed, Fraser discloses that its formulations were freeze-thawed and needed to be used in two weeks, which would give a POSA significant reason to doubt that Dix's test results show the native conformation that Fraser's formulation would have had. And that is not all. Fraser does not disclose the sequence of the protein used, it does not disclose the host cell used to produce the protein, it does not disclose the container used to store the formulation, and it discloses a McIlvane buffer, not the recited phosphate buffer. The Board did not fully consider these issues (or consider some of them at all) when it granted institution. With the benefit of a full record, the flaws in the Petition are straightforward. There can be no anticipation when it is at best "probable" that the formulations of Fraser included various claim elements, and for that reason Petitioner's Ground 1 must fail.

Petitioner's efforts to argue around the deficiencies of Fraser reflect a fundamental misapprehension of the law on inherent anticipation. "Inherency… may not be established by probabilities or possibilities." *PersonalWeb Techs., LLC v. Apple, Inc.*, 917 F.3d 1376, 1382 (Fed. Cir. 2019) (reversing a finding of unpatentability in an IPR). Thus, the "mere fact that a certain thing *may* result from a given set of circumstances is not sufficient." *In re Oelrich*, 666 F.2d 578, 581 (C.C.P.A. 1981) (reversing rejection of claim as unpatentable based on inherency); *see also Allergan, Inc. v. Apotex Inc.*, 754 F.3d 952, 960 (Fed. Cir.

2014) (affirming judgment that claims were not inherently anticipated since the prior art only showed that the limitation *might* occur, not that it inevitably occurred). Accordingly, inherent anticipation requires that "a person of ordinary skill in the art would recognize that missing descriptive matter in a prior art reference is nevertheless necessarily present." *HTC Corp. v. Cellular Commc'ns Equip., LLC*, 877 F.3d 1361, 1368 (Fed. Cir. 2017) (affirming Board's finding in an IPR that claims were not inherently anticipated); *Organik Kimya AS v. Rohm & Haas Co.*, 873 F.3d 887, 893 (Fed. Cir. 2017) (affirming Board in finding that petitioner had failed to show inherent anticipation).

A. Fraser Does Not Disclose SEQ ID NO:4 in the Claimed Formulation (Claims 4-7 and 13-16)

Petitioner cannot show anticipation of challenged claims 4 and 13 (or their dependent claims 5-7 and 14-16) because Fraser does not disclose any sequence information for the VEGF Trap protein it employs, let alone specify that it includes "amino acids 27-457 of SEQ ID NO:4" as the claims require.

The Board was persuaded at institution by Petitioner's arguments that VEGF $Trap_{R1R2}$ in Fraser *necessarily* refers to one and only one protein, based on Petitioner's reliance on *four* additional pieces of prior art (Wulff, Holash, the '319 Publication, and the '309 Publication). But this is at best an obviousness argument, when in all events, nothing in the prior art actually supports Petitioner's assertion that Fraser was using aflibercept. The term "aflibercept" is nowhere used

in the cited prior art as of June 2006. The Decision on Institution places the burden on Patent Owner to show any instance where VEGF $Trap_{R1R2}$ was used to refer to more than one protein, D.I. 29, but this improperly shifts the burden onto Patent Owner to disprove anticipation, instead of holding Petitioner to its burden to prove it. Moreover, the Board's Decision on Institution does not address the overall prior art landscape, which shows that Regeneron was investigating various VEGF Trap fusion proteins, and there is no prior art evidence supporting Petitioner's implicit assertion that Regeneron had specifically assigned the designation VEGF $Trap_{R1R2}$ to one and only one protein.

Instead, Fraser refers to the protein in its formulations in broad functional and structural terms as a "VEGF Trap" or "VEGF $Trap_{R1R2}$." *E.g.*, Ex.1009, 1114-15, 1118. This nomenclature makes sense, because the protein "traps" VEGF and includes portions of VEGF Receptor 1 ("R1") and VEGF Receptor 2 ("R2"). Ex.2047 ¶72. The POSA would recognize that numerous proteins could be considered "VEGF Trap" or "VEGF $Trap_{R1R2}$" proteins based on the description of the protein provided in Fraser. Ex.2047 ¶105. But he or she would have no basis to conclude, as Petitioner and Dr. Tarantino assert, that "VEGF $Trap_{R1R2}$" refers to one, *and only one*, specific VEGF Trap sequence, which later became known as aflibercept. Ex.2047 ¶106.

Petitioner's anticipation argument to the contrary should be rejected for two reasons. First, Petitioner's anticipation argument is at best a thinly-veiled obviousness argument. Instead of relying solely on the disclosures of Fraser, Petitioner relies on Holash, Wulff, the '319 Publication, *and* the '309 Publication to allege that Fraser necessarily describes aflibercept. Pet.43-46. Petitioner's need to combine four separate references with Fraser—none of which are incorporated by reference in Fraser, and some of which are not even cited by Fraser—is contrary to the law of anticipation. *See Teleflex, Inc. v. Ficosa N. Am. Corp.*, 299 F.3d 1313, 1335 (Fed. Cir. 2002) ("anticipation does not permit an additional reference to supply a missing claim limitation").

As the Board's decision in *Genus Plc v. Inguran*, IPR2021-01027, 2022 WL 17532274 (P.T.A.B. Dec. 8, 2022) makes clear, a petitioner may not attempt to use a document cited in an allegedly anticipatory reference to prove anticipation unless the relevant disclosure is specifically and completely incorporated into the reference. In *Genus Plc*, the petitioner attempted to argue anticipation by "Dekkers, as evidenced by either Maxwell or Garner." *Id.* at *6. Dekkers disclosed the relevant claim limitations only generally; the petitioner nonetheless contended that Dekkers anticipated because it cited Maxwell and Garner, which allegedly "evidence[d] knowledge attributable to a [POSA]." *Id.* The Board rejected the argument, because the incorporation by reference was not done "with

any level of particularity." The Board concluded that Petitioner's arguments about what POSA would be aware of is "reasoning…more applicable to an obviousness-based challenge and not the present anticipation challenge." *Id.* at *9. The same is true of Petitioner's reasoning in this proceeding.

Second, Petitioner has not shown that the POSA would have been motivated to make the same combination of references reflected in the Petition without the benefit of the '992 patent claims. Not only does Fraser fail to incorporate by reference any of the additional art Petitioner relies on, but Fraser does not even cite the '319 Publication or the '309 Publication, which are the only two references Petitioner relies on to disclose specific sequence information for VEGF Trap proteins. Ex.1009, 1114-22. Petitioner nonetheless contends that the POSA would read the prior art collectively in June 2006 in the same way as Petitioner does in 2023. But Petitioner is only able to travel this labyrinthine path with the benefit of hindsight. Even if a POSA somehow embarked on this same journey, nothing in the cited prior art would allow a POSA to conclusively determine the sequence of Fraser's VEGF Trap as Petitioner contends.

Instead, as of June 2006, the POSA would have concluded that the terms "VEGF Trap" and "VEGF TrapT_{R1R2}" do not connote any specific protein sequence, but instead referred to a class of proteins with certain functional ("Trap") and structural ("R1R2") characteristics. The POSA would have also known that

multiple VEGF Trap proteins—both those reported in Regeneron publications, and others, which Regeneron may not have described in publications—could fall under the umbrella of, and be considered, a "VEGF Trap" or "VEGF $Trap_{R1R2}$" protein.

For example, the '319 Publication, discloses multiple VEGF Trap proteins (called Flt1D2.Flk1D3.FcΔC1(a) and VEGFR1R2-FcΔC1(a) in the '319 Publication) that include R1R2 domains and are accordingly called R1R2 proteins. Ex.1029, 58:22-59:10. Yet, even though both of these proteins could accurately be described as "VEGF Trap R1R2," these proteins have different sequences, as the '319 Publication confirms. The nucleotide and amino acid sequences for Flt1.D2.Flk1D3.FcΔC1(a) are listed in Figures 21A-21C, *id.* 21:16-17, while those of VEGFR1R2-FcΔC1(a) are listed in Figures 24A-24C, *id.* 22:1-2. When aligned,[5] they show the differences highlighted below:

[5] The "Query" sequence corresponds to Flt1D2Flk1D3.FcΔC1(a), the "Sbjct" sequence corresponds to VEGFR1R2-FcΔC1(a), and the sequence in between lists the amino acid residues that are same between the two proteins. Ex.2047 ¶114. Gaps in the middle sequence illustrate differences in the structure of the two proteins. Ex.2047 ¶¶113-114.

Score	Expect	Method	Identities	Positives	Gaps
930 bits(2404)	0.0	Compositional matrix adjust.	455/461(99%)	455/461(98%)	6/461(1%)

```
Query  1    MVSYWDTGVLLCALLSCLLLTGSSSG---GRPFVEMYSEIPEIIHMTEGRELVIPCRVTS  57
            MVSYWDTGVLLCALLSCLLLTGSSSG   GRPFVEMYSEIPEIIHMTEGRELVIPCRVTS
Sbjct  1    MVSYWDTGVLLCALLSCLLLTGSSSGSDTGRPFVEMYSEIPEIIHMTEGRELVIPCRVTS  60

Query  58   PNITVTLKKFPLDTLIPDGKRIIWDSRKGFIISNATYKEIGLLTCEATVNGHLYKTNYLT  117
            PNITVTLKKFPLDTLIPDGKRIIWDSRKGFIISNATYKEIGLLTCEATVNGHLYKTNYLT
Sbjct  61   PNITVTLKKFPLDTLIPDGKRIIWDSRKGFIISNATYKEIGLLTCEATVNGHLYKTNYLT  120

Query  118  HRQTNTIIDVVLSPSHGIELSVGEKLVLNCTARTELNVGIDFNWEYPSSKHQHKKLVNRD  177
            HRQTNTIIDVVLSPSHGIELSVGEKLVLNCTARTELNVGIDFNWEYPSSKHQHKKLVNRD
Sbjct  121  HRQTNTIIDVVLSPSHGIELSVGEKLVLNCTARTELNVGIDFNWEYPSSKHQHKKLVNRD  180

Query  178  LKTQSGSEMKKFLSTLTIDGVTRSDQGLYTCAASSGLMTKKNSTFVRVHEKGPGDKTHTC  237
            LKTQSGSEMKKFLSTLTIDGVTRSDQGLYTCAASSGLMTKKNSTFVRVHEK   DKTHTC
Sbjct  181  LKTQSGSEMKKFLSTLTIDGVTRSDQGLYTCAASSGLMTKKNSTFVRVHEK---DKTHTC  237

Query  238  PPCPAPELLGGPSVFLFPPKPKDTLMISRTPEVTCVVVDVSHEDPEVKFNWYVDGVEVHN  297
            PPCPAPELLGGPSVFLFPPKPKDTLMISRTPEVTCVVVDVSHEDPEVKFNWYVDGVEVHN
Sbjct  238  PPCPAPELLGGPSVFLFPPKPKDTLMISRTPEVTCVVVDVSHEDPEVKFNWYVDGVEVHN  297

Query  298  AKTKPREEQYNSTYRVVSVLTVLHQDWLNGKEYKCKVSNKALPAPIEKTISKAKGQPREP  357
            AKTKPREEQYNSTYRVVSVLTVLHQDWLNGKEYKCKVSNKALPAPIEKTISKAKGQPREP
Sbjct  298  AKTKPREEQYNSTYRVVSVLTVLHQDWLNGKEYKCKVSNKALPAPIEKTISKAKGQPREP  357

Query  358  QVYTLPPSRDELTKNQVSLTCLVKGFYPSDIAVEWESNGQPENNYKTTPPVLDSDGSFFL  417
            QVYTLPPSRDELTKNQVSLTCLVKGFYPSDIAVEWESNGQPENNYKTTPPVLDSDGSFFL
Sbjct  358  QVYTLPPSRDELTKNQVSLTCLVKGFYPSDIAVEWESNGQPENNYKTTPPVLDSDGSFFL  417

Query  418  YSKLTVDKSRWQQGNVFSCSVMHEALHNHYTQKSLSLSPGK  458
            YSKLTVDKSRWQQGNVFSCSVMHEALHNHYTQKSLSLSPGK
Sbjct  418  YSKLTVDKSRWQQGNVFSCSVMHEALHNHYTQKSLSLSPGK  458
```

Ex.2001 ¶¶46-47. The alignment shows that Flt1.D2.Flk1D3.FcΔC1(a) *lacks* three amino acids—"SDT" or serine-aspartic-acid-threonine—present in VEGFR1R2-FcΔC1(a), but *includes* three additional amino acids—"GPG" or glycine-proline-glycine—that are not present in VEGFR1R2-FcΔC1(a). *Id.* *See also* Ex.1029, 51:5-12, 61:2-8, 67:4-15. The POSA would recognize that these differences are in the linking sequences *between* the R1 and R2 domains.

Daly (Ex.2013), which Dr. Tarantino did not consider, Ex.2054, 213:4-13, also confirms that Regeneron was developing and evaluating multiple VEGF Trap

proteins, including multiple VEGF $Trap_{R1R2}$ proteins. Ex.2047 ¶¶120-122; Ex.2013 ¶¶23-32.

Based on these disclosures, the POSA would not share Dr. Tarantino's view that the below schematic from Wulff depicts "the structure of aflibercept," and *only* aflibercept. Ex.1002 ¶57.

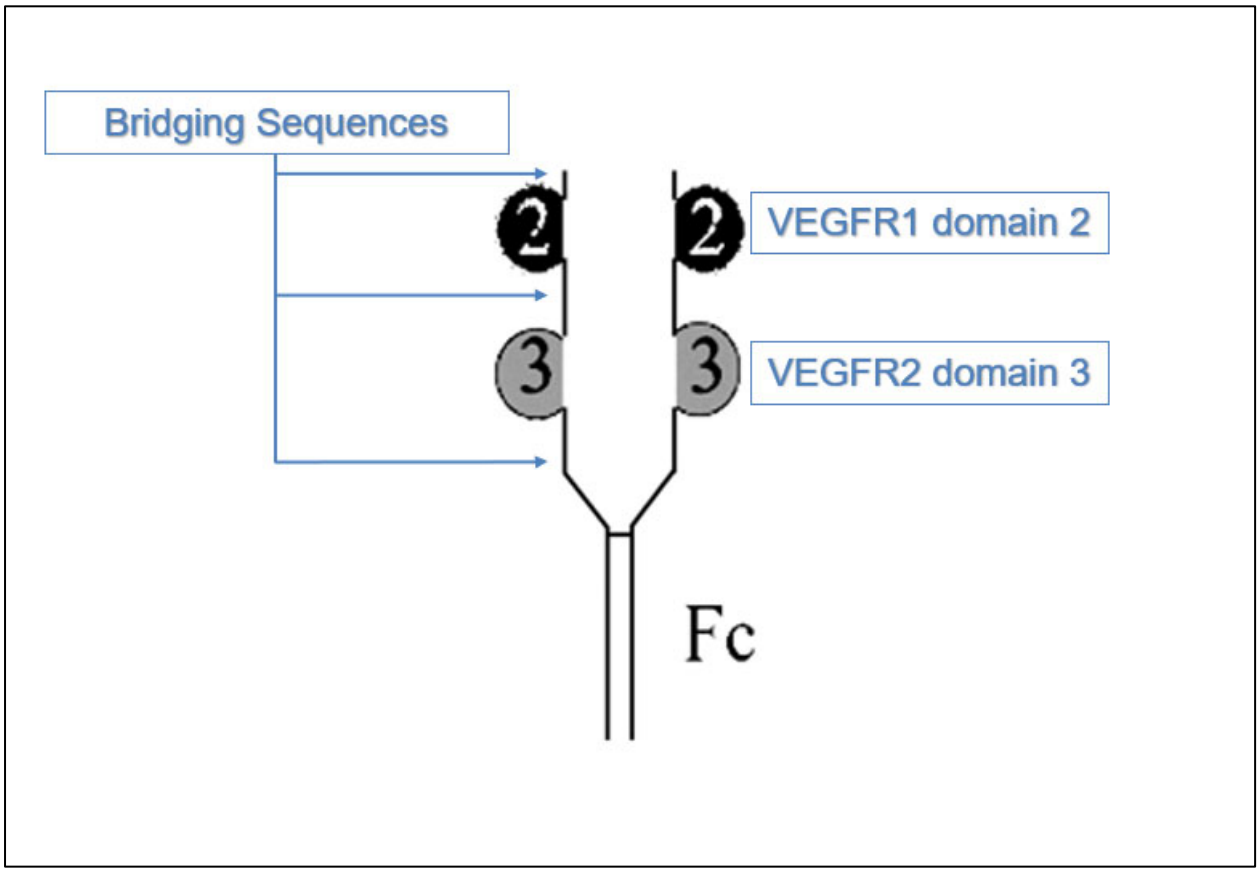

Ex.1016, 2798 (annotated).

Dr. Tarantino's opinion appears to be based on his mistaken view that aflibercept is the *only* VEGF Trap protein with these VEGF domains fused to an Fc region. Ex.2054, 181:3-182:5. But Dr. Tarantino does not cite to any art that even uses the term aflibercept. And even if he had, the '319 Publication and Daly

would explicitly confirm to a POSA in June 2006 that VEGF $Trap_{R1R2}$ is a general name for a genus of proteins, not the specific name for one protein in all instances. Ex.2047 ¶¶111-112, 118. At a minimum, a POSA would recognize that different VEGF $Trap_{R1R2}$ proteins could result from different bridging sequences between the R1 and R2 domains (as in the '319 Publication), between the R1 domain and the terminal end of the protein, or between the R2 domain and the Fc region of the protein. Ex.2047 ¶¶112-117.

Dr. Tarantino's testimony that the "linking sequence is…sort of irrelevant when…you actually have the sequence of the entire protein" highlights the flaw in his invalidity analysis. Ex.2054, 195:3-17. The POSA, not equipped with Dr. Tarantino's post-priority knowledge of the "sequence of the entire protein" used in Fraser, would have no reason to think that this was the *only* sequence corresponding to a "VEGF Trap"/"VEGF $Trap_{R1R2}$," or that this was the sequence Fraser *necessarily* used. Instead, the POSA would have recognized that Regeneron was working with multiple VEGF $Trap_{R1R2}$ proteins, not all of which were necessarily reported in the literature, and concluded that "VEGF $Trap_{R1R2}$" was nomenclature to describe a genus of proteins, not just what later-became known as aflibercept and corresponds to SEQ ID NO:4 in the '992 patent. Ex.2047 ¶¶77, 105-106, 109, 126.

The Board's Decision on Institution preliminarily accepted Petitioner's argument that "VEGF $Trap_{R1R2}$" refers to one and only one protein, because Fraser and Wulff reported results using a single VEGF Trap protein. D.I. 28-29. While it is true that Fraser and Wulff report using one protein, that does not address the question of whether their use of the term "VEGF $Trap_{R1R2}$" refers to one specific protein in all instances, and if not, which VEGF $Trap_{R1R2}$ was used in Fraser. Dr. Tarantino testified that he does not have any knowledge of Regeneron's internal naming procedures for the therapeutic proteins it investigates, Ex.2054, 185:10-21, and Wulff itself refers to "VEGF Trap R1R2" as "R1R2" in the alternative. There is no basis in the record to focus on only one of the "R1R2" proteins described in the '319 Publication, to the exclusion of others. If the fact that the '319 Publication does not explicitly refer to its various "R1R2" VEGF Traps by the designation "VEGF $Trap_{R1R2}$" were dispositive, then the '319 Publication would have no relevance at all to Petitioner's Grounds, because it never uses the term "VEGF $Trap_{R1R2}$."

The '309 Publication states that VEGFR1R2-FcΔC1(a), one of the "R1R2" proteins described in the '319 Publication, is "also termed VEGF $trap_{R1R2}$." Ex.2047 ¶86; Ex.2017 ¶5. It does not follow, however, that the POSA would conclude that *only* this specific protein is termed "VEGF $trap_{R1R2}$." Dr. Tarantino acknowledged that various species within a group of molecules are "termed" in

accordance with the group name. For example, Dr. Tarantino agreed that "trehalose is termed carbohydrate," even though it is not the only molecule called a carbohydrate. Ex.2054, 54:2-55:8. And "phosphate" can be termed "buffer," even though it is not the only chemical that is called a buffer. *Id.* at 123:22-124:3 ("Q. And there are different chemicals that are termed 'buffer,' right? A. …[T]here are different chemicals that are called 'buffers,' yes.").

The Decision on Institution notes that Patent Owner did not cite "any references in which the term 'VEGF $Trap_{R1R2}$,' is used to refer to more than one protein." D.I. 29. But this flips the parties' respective burdens. It is not Patent Owner's burden to identify multiple proteins that are expressly called "VEGF $Trap_{R1R2}$"; it is Petitioner's burden for anticipation to demonstrate that there is necessarily only one such protein. *Dynamic Drinkware, LLC v. Nat'l Graphics, Inc.*, 800 F.3d 1375, 1378-79 (Fed. Cir. 2015)

If the specific naming convention/format were dispositive, Petitioner's evidence would cause even greater uncertainty about the specific sequence of the protein used in Fraser. Fraser refers to "$Trap_{R1R2}$," with a capital "T," not "$trap_{R1R2}$" with a lowercase "t." Similarly, Wulff refers to "VEGF Trap R1R2," where the T is capitalized and the R1R2 is not in subscript. Neither reference uses nomenclature identical to the "VEGF $trap_{R1R2}$" described in the '309 Publication. The more straightforward reading of the prior art, which a POSA would apply, is

that "VEGF $Trap_{R1R2}$" refers to a genus of proteins, by general structure and function. Thus, Petitioner has not shown by a preponderance of the evidence that Fraser necessarily used a fusion protein that includes the amino acid sequences of SEQ ID NO:4 in claims 4 and 13. Even if it is probable that Fraser did, this is not enough for anticipation. *E.g.*, *PersonalWeb Techs.*, 917 F.3d at 1382; *Allergan*, 754 F.3d at 960.

B. Petitioner Does Not Show that Fraser's Formulation Necessarily Meets the Native Conformation Limitations (All Claims)

Petitioner cannot demonstrate anticipation of any challenged claim by a preponderance of the evidence for the additional reason that Fraser does not disclose the stability limitations required in every claim, which Petitioner acknowledges were the primary basis for allowance during prosecution. Pet. 9-10. Petitioner concedes that Fraser does not "explicitly disclose" any VEGF Trap formulations where more than 98% of the protein maintained its native conformation after two months of storage at 5°C, as required by the claims. Pet. 1, 36; Ex.1002 ¶96.

Despite this acknowledged deficiency, Petitioner attempts to save its anticipation ground by arguing that the native conformation is inherent in the claimed formulations, based on native conformation data disclosed in a different Regeneron patent, Dix (Ex.2021). Pet. 24 n.3; Ex.1002 ¶96. Petitioner has not shown that Dix's data proves that the formulation disclosed in Fraser would

necessarily satisfy the claimed native conformation limitations—in violation of basic inherency law. *E.g.*, *Allergan*, 754 F.3d at 960.

Unlike the formulations relied upon in Dix, Fraser discloses formulations that had been frozen and thawed, and should be disposed of within two weeks. Ex.1009, 1115. These disclosures were not addressed by the parties or Board at the institution stage, but they matter because freeze-thaw cycles can induce aggregation and thus shorten a formulation's shelf life. Ex.2047 ¶142. Dix does not specify freezing, so Petitioner is wrong to assume that Fraser's formulation would exhibit the same stability profile as the formulation in Dix.

Further, Fraser does not specify the exact identity of the molecule used. As laid out in VI.A above, Fraser does not specify the amino acid sequence of its VEGF $Trap_{R1R2}$, and Petitioner cannot rely on post-priority statements about the identity of the protein used in Fraser to fill the gaps. *Amgen, Inc. v. Alexion Pharms.*, IPR2019-00741, 2019 WL 4132685, at *9-11 (P.T.A.B. Aug. 30, 2019) (citing *Endo Pharms. Sols., Inc. v. Custopharm, Inc.*, 894 F.3d 1374, 1383 (Fed. Cir. 2018)). Fraser also fails to disclose the post-translational modifications to its protein, including the glycosylation pattern. Protein sequence and post-translational modifications can impact whether a protein remains in native conformation, so the single experiment reported in Dix measuring native

conformation of one protein does not show that Fraser's product would also necessarily satisfy the native conformation limitations. Ex.2047 ¶¶136-137.

1. Fraser's Formulation Was Frozen, and Dix Does Not Show that a Frozen Formulation Would Meet the Native Conformation Limitation

Petitioner's reliance on Dix and Fraser to show inherent stability lacks a scientifically sound basis because Petitioner does not account for the fact that Fraser's formulation was frozen, Ex.2047 ¶141; Ex.1009, 1115, and so would not necessarily exhibit the claimed stability. This significant difference between the Fraser formulation and the Dix formulation was not addressed in the Decision on Institution and provides a separate ground to find the challenged claims patentable.

It is well-known that a freeze-thaw cycle can negatively impact protein stability. Ex.2047 ¶48; *see* Ex.2054, 139:20-140:14 (Dr. Tarantino explaining that freeze-thaw testing is necessary from a regulatory standpoint in order to evaluate whether a product remains within the specifications once thawed), 226:2-6 ("[W]hat…was approved was your solution product. So it's a general precaution that you don't want it frozen…."); Ex.2060, 2. When a protein formulation is frozen, the aqueous component of the formulation can crystallize. Ex.2047 ¶49; Ex.2061, 3. This crystallization harms stability in several ways. First, ice-water interfaces can destabilize the protein. Ex.2047 ¶49; Ex.2061, 3. Second, as the aqueous component is pulled out of solution, the concentration of the protein and

other solutes increases. Ex.2047 ¶49; Ex.2061, 3. The higher protein concentration can promote aggregation, as can pH shifts caused by the increased concentration of certain solutes. Ex.2047 ¶49; Ex.2061, 3. Then, as the solution is thawed for administration, further degradation can occur. Ex.2047 ¶49; Ex.2062, 1.

Nor would the POSA understand the pre-freeze native conformation of a formulation to be indicative of the post-thaw formulation's degradation. Thus, when comparing the stability of two formulations, it is critical to determine whether they have undergone a freeze-thaw cycle. Ex.2047 ¶¶142-43. If one formulation has undergone a freeze-thaw cycle, it is not possible to determine the post-thaw native confirmation of that formulation by relying on data characterizing pre-freeze confirmation. Ex.2047 ¶143; Ex.2054, 226:10-20 (acknowledging that you would need to see data "[t]o know if there is a significant problem" with freezing). Because Dix does not specify that its formulation had been frozen and thawed, Dix's stability data cannot provide the native conformation information missing from the disclosure of Fraser. Ex.2047 ¶143.

2. The POSA Would Not Have Known the Identity of Fraser's Protein, and Dix Does Not Show that the Range of Possible Proteins Would Meet the Native Conformation Limitation

As discussed above in Part VI.A, Fraser does not expressly or inherently disclose the sequence of the "VEGF Trap"/"VEGF $Trap_{R1R2}$" protein used in its

formulations. Further, Fraser does not disclose the post-translational modifications for its protein. Because the sequence and post-translational modifications are not disclosed in Fraser, it would not be clear to the POSA at the time of the invention which of a range of molecules Fraser used. Within that range are proteins that are not the same as the one tested in Dix. Proteins with different sequences or glycosylation patterns than the one tested in Dix would not necessarily exhibit the same native conformation.

Even small changes in the amino acid sequence of proteins can have large effects on their stability, including their propensity to aggregate, cleave, or denature. Ex.2047 ¶¶35-44; Ex.2054, 17:8-18 (Dr. Tarantino explaining that "stability is generally indicated by the amino acid sequence."), 21:15-22:5, 115:18-116:7 (providing examples of the mechanisms), 285:21-286:7; Ex.2015, 72; Ex.1006, 14 (both recommending changing to the amino acid sequence to enhance stability). Brange reports that a difference of just two amino acids makes bovine insulin more prone to aggregate than human or porcine insulin. Ex.2047 ¶36; Ex.2063, 2; Ex.2015, 68. Sanfelice and Yang both describe single amino acid mutations that make a protein less prone to cold denaturation. Ex.2047 ¶39; Ex.2019, 2-3, Table 1; Ex.2042. Non-enzymatic and enzymatic cleavage both occur at certain amino acid residues, and so adding those residues could result in the formation of fragments. Ex.2047 ¶40; Ex.2064, 49-50; Ex.2065, 8; Ex.2054,

21:15-22:5 (Dr. Tarantino mentioning cleavage as one example of a sequence-dependent degradation pathway). Different linker sequences can affect whether a protein remains in native conformation, including by determining the spatial separation between domains and affecting the conformational stability of the protein as a whole. Ex.2047 ¶¶41-43; Ex.2040; Ex.2038; Ex.2039.

Post-translational modifications can impact whether a protein remains in native conformation too. Ex.2047 ¶45. For example, glycosylation can impede aggregation because, depending on their size and location, glycans can block interactions between hydrophobic patches on adjacent proteins. *Id.*; Ex.2066, 11.

Because Fraser does not identify the amino acid sequence and post-translational modifications of the protein used with enough specificity to know they were the same that Dix tested, it is possible that the protein in Fraser was a different molecule than the protein described in Dix. Ex.2047 ¶135. Because these differences can significantly impact the extent to which a given protein maintains its native conformation in formula, the POSA would have concluded that Dix does not teach that Fraser's VEGF $Trap_{R1R2}$ drug product would necessarily meet the native conformation limitations. Ex.2047 ¶¶136-37, 139-40.

C. Fraser Does Not Disclose that the VEGF Trap Protein It Tested Was Created in CHO Cells (All Claims)

Petitioner cannot show anticipation of any challenged claim for the additional reason that Fraser does not describe the host cell used to produce the

"VEGF Trap"/"VEGF $Trap_{R1R2}$" protein it studied. Despite this lack of disclosure, Petitioner contends that "a POSA would have understood" that CHO cells were used. Pet. 45. As with Petitioner's arguments about the "SEQ ID NO:4" requirement of 4 and 13 (discussed above), its anticipation arguments regarding the CHO host cell limitation are flawed factually and legally.

From a factual standpoint, on institution, the Board credited Dr. Tarantino's testimony that the POSA would have known that the "VEGF Trap"/"VEGF $Trap_{R1R2}$" disclosed in Fraser was created in CHO cells. D.I. 32-33. But Dr. Tarantino's deposition showed that he had no basis to draw the conclusions he did, because he lacks knowledge of highly relevant facts. For example, Dr. Tarantino demonstrated very little familiarly with potential host cells used to express recombinant proteins and did not appreciate that, while certain experimental examples in Regeneron prior publications used CHO cells, both the '319 Publication and the '309 Publication disclose use of other host cells. Ex.2054, 215:3-217:13; Ex.1029, 56:1-6, 12:19-26, 94:5-19; Ex.1027, ¶26. The Daly reference likewise contemplates other host cells. Ex.2013 ¶¶13, 73-74; *see* Ex.2054, 213:4-214:8, 214:20-215:2.

Dr. Tarantino also showed a lack of knowledge of what potential host cells were in use, which makes his assertion that CHO cells were the most commonly used host cell unsupported. For example, Dr. Tarantino was

unaware that daclizumab, a therapeutic antibody for which he led formulation, was expressed in a non-CHO mammalian host cell. Ex.2054, 27:16-28:4, 148:23-149:8, 219:3-9. Similarly, despite having worked at Hoffman La Roche for decades, Dr. Tarantino was unaware that ranibizumab, an anti-VEGF antibody fragment he referenced in his report, was expressed in bacterial host cells. *Id.* at 27:16-19, 44:14-19, 250:7-251:14; Ex.1002 ¶6).

The fact that some of the cited prior art discloses VEGF Traps produced in CHO cells is insufficient to support anticipation by Fraser. As an initial matter, and as discussed above, it is axiomatic that anticipation requires that a single reference disclose all elements of the claim. The mere fact that Fraser references obtain material from Regeneron and cites to other publications that do disclose the use of CHO host cells is insufficient to demonstrate disclosure in Fraser itself. *See Teleflex*, 299 F.3d at 1335; *Genus Plc*, 2022 WL 17532274 at *6-9. Although Fraser cites Holash, it does not reference the host cell used in Holash, nor does it incorporate the disclosures of Holash by reference. *See, e.g.*, Ex.1009, 1115. Thus, Dr. Tarantino's opinions again reflect an obviousness analysis, not anticipation. *See Genus Plc*, 2022 WL 17532274 at *9.

Dr. Tarantino's lack of familiarity with the state of the art regarding host cells and his failure to consider contradictory disclosures about the many different host cells used by Regeneron render his opinions on this limitation entirely

conclusory, and they should be given no weight. *See, e.g.*, *Amazon.com, Inc. v. Jumpsport, Inc.*, IPR2018-00715, 2018 WL 4263376, at *19 (P.T.A.B. Sept. 6, 2018) (explaining that "conclusory testimony that does not provide the basis for the opinion is entitled to little or no weight"). A POSA, on the other hand, would know by June 2006 that CHO cells were far from the only mammalian cell used in the industry for recombinant protein production. Ex.1017, 1393 (in addition to CHO, "other cell lines, such as those derived from mouse myeloma (NS0), baby hamster kidney (BHK), human embryo kidney (HEK-293) and human retinal cells have gained regulatory approval for recombinant protein production"). Daly describes producing a VEGF antagonist in *E. coli.* Ex.2013 ¶43. As discussed above, this is the same host cell used to produce the anti-VEGF antibody fragment ranibizumab, which the POSA, unlike Dr. Tarantino, would have known. Ex.2067, 31:22-23.

In a footnote, Dr. Tarantino contends that the disclosures of Holash, Wulff, and the '319 Publication can be read with Fraser to arrive at the CHO host cell limitations of the claims, because the references are all describing the same protein and because, according to Dr. Tarantino, manufacturers do not switch cell lines once a protein "has entered human clinical trials." Ex.1002, ¶95 n.5. But Fraser is not about human trials; it is about *animal* experiments conducted sometime prior to August 2004. Ex.1009. Fraser is not even a reference about efficacy of a

promising drug candidate; it is about effects on ovarian function. *Id.* Indeed, as Dr. Klibanov explains, the POSA would have thought that, in the years between Holash's and Fraser's studies, there was at least some possibility that the company would change cell lines. Ex.2047 ¶129. Holash was published in 2002 and describes in vitro testing of proteins within the VEGF Trap family. Fraser was published more than two years later and describes a late-stage animal study. As discussed above, like other industry participants, Regeneron contemplated and used other "suitable host cells" for recombinant protein production, including E. coli and COS cells. Ex.2047 ¶¶83, 87; Ex.1029, 12:19-26, 94:5-19; Ex.2068 ¶96; Ex.2013 ¶74.

D. Fraser Does Not Disclose a Vial (Claims 1-9)

Fraser does not anticipate claims 1-9, for the additional reason that Fraser does not specify the type of container in which its formulation was stored. Fraser merely states that VEGF $Trap_{R1R2}$ "was provided… in 2-ml aliquots." Ex.1009, 1115. The POSA would recognize that "aliquot" refers to a sample, not any particular container. Ex.2047 ¶98; *see* Ex.1002, ¶105. While a vial is one possible container, it is not the only one, and Fraser's limited disclosure is also consistent with the use of other containers. Ex.2047 ¶98. For example, the formulations described in Fraser could have been stored in a pre-filled syringe or an ampule, which the POSA would realize are different from a "vial." Ex.1038, 24. Even if it

were likely that a vial was used to store the Fraser formulations, "probabilities or possibilities" are not enough for inherent anticipation. *In re Cortright*, 165 F.3d 1353, 1360 (Fed. Cir. 1999) (internal citations omitted).

Petitioner does not dispute that Fraser fails to expressly disclose a vial but contends that Fraser necessarily used a "vial for injection," because according to Petitioner, these are the only containers that would adequately "prevent contamination of the aliquots during use and storage, to ensure the well-being of the macaques, and to avoid compromising the study data." Pet. 49. At best, this shows that a vial is one possible container, but not the only one. Ex.2047 ¶98.

The FDA guidance cited by Petitioner provides several container options for a small volume parental (such as the aliquots described in Fraser), such as "a disposable cartridge, a disposable syringe, a vial, an ampule, or a flexible bag." Ex.1038, 24; *see also* Ex.2054, 46:21-47:20; Ex.1006, 4, Table 2. Pre-filled syringes, for example, were known around that time as an option for supplying therapeutic protein formulations. Ex.2047 ¶¶99-100; Ex.2069; Ex.2070; Ex.2071; *see* Ex.2072 (testing stability of Avastin in pre-filled syringes); Ex.2054, 10:19-23, 46:21-47:20, 51:15-21. Ampules would be an excellent option for stability because the sealed, all-glass closure reduces the likelihood of degradation due to, for example, leachates from a rubber stopper. Ex.2047 ¶101; *see* Ex.2054, 11:11-17, 46:21-47:20; Ex.1013, 155; Ex.1006, 4, Table 2; Ex.2073, 10. While

Petitioner's expert contends that ampules are disfavored commercially, they were used for trials and commercial products around the time of Fraser's study, and commercial products are supplied in ampules to this day. Ex.2047 ¶102; Ex.2074, 4; Ex.2075, 4; Ex.2076; Ex.2077; Ex.2078; Ex.2079. Additionally, as Petitioner's expert acknowledged, "[i]t's not a rule" that protein formulations must be supplied in vials, and as the FDA guidance he relied upon confirms, it was one available container option at the time of the invention. Ex.2054, 50:23-51:8, 47:14-20. Thus, Petitioner's reasoning does not narrow the possibilities to just "vials for injection" or even to just "vials" under Patent Owner's proposed construction. *PersonalWeb Techs.*, 917 F.3d at 1382; *Allergan, Inc.*, 754 F.3d at 960.

Petitioner argues that an internal Regeneron lab notebook shows the same lot referenced in Fraser was stored in "vials." Pet. 49-50. But the notebook was not publicly available at this time, and therefore, its post-priority disclosure cannot fill in the gaps missing from Fraser. *Amgen*, 2019 WL 4132685, *10.

Petitioner argues in the alternative that Regeneron would have had to provide its drug in some kind of "small, closed or closeable vessels" (*i.e.*, Petitioner's proposed construction of "vial") to minimize contamination and spillage. Pet. 49. Either Petitioner is contending that *all* small closeable vessels are "vials," or Petitioner is contending that a vial was the *likely* container used. If the former, it underscores why Petitioner's claim construction of "vial" cannot be

correct. If the latter, it confirms that Petitioner's argument is for obviousness, not anticipation, by implicitly conceding that a vial was not *necessarily* used. *PersonalWeb Techs.*, 917 F.3d at 1382; *Allergan, Inc.*, 754 F.3d at 960.

E. Fraser's Buffer Is Not Phosphate (Claims 9 and 18)

Petitioner does not show by a preponderance of the evidence that claims 9 and 18 are anticipated by Fraser, for the additional reason (not before the Board at institution) that Fraser does not disclose a buffer that is phosphate. Fraser uses a citrate-phosphate buffer in its formulations, but this is not the same as a phosphate buffer.[6] Ex.2047 ¶¶147-151. The POSA would recognize that a citrate-phosphate buffer, often called McIlvane buffer, has different component ingredients and different buffering capacity than a phosphate buffer. Ex.2047 ¶147; Ex.2080. The POSA would be aware of the differences between the buffers, and therefore, claims 9 and 18 are not anticipated. Ex.2047 ¶151; Ex.2081; *see UCB, Inc. v. Accord Healthcare, Inc.*, 201 F. Supp. 3d 491, 544-45 (D. Del. 2016), *aff'd*, 890 F.3d 1313 (Fed. Cir. 2018) (finding a claim to a composition containing a specific enantiomer was not anticipated by a prior art disclosure of a racemic mixture of enantiomers with different properties).

---

[6] Although the control formulations in Fraser do include a phosphate buffer, they do not meet other claimed limitations. Ex.1009, 1115.

VII. GROUND 2 – PETITIONER DOES NOT SHOW THAT THE CLAIMS ARE OBVIOUS

Petitioner's obviousness Ground 2 fares no better than Ground 1 and fails to show by a preponderance of the evidence that any challenged claims are obvious.

First, Petitioner fails to present adequate motivation for the POSA to start with the formulation of Fraser, given the concerns the POSA would have about the stability and tonicity of the Fraser formulation.

Second, Petitioner does not provide any motivation for a POSA to select SEQ ID NO:4, beyond its unsupported (and as discussed above, incorrect) assumption that a POSA would know the identity of the protein used in Fraser.

Third, Petitioner's obviousness arguments for the native conformation limitations improperly rely on inherency where the identity of the prior art VEGF Trap would not have been known to the POSA, and therefore, the POSA would not have expected to achieve the stability results disclosed in Dix. Further, Petitioner fails to show that the POSA would have been motivated to pursue the high levels of stability reflected in the claims for VEGF Trap fusion proteins (particularly for the claims requiring 99% native conformation), let alone had any expectation of success in doing so. Notably, the recited native conformation limitations exceed the targeted native conformation percentages disclosed in some of Petitioner's own references.

Fourth, the prior art would have dissuaded the POSA from changing Fraser's citrate-phosphate buffer to a phosphate buffer, so Petitioner's Ground 2 fails for dependent claims 9 and 18 as well.

A. The POSA Would Not Have Used Fraser's Formulations as a Starting Point to Develop Stable VEGF Trap Formulations (All Claims)

Petitioner argues that the POSA, knowing of Regeneron's success with VEGF Trap in initial human clinical trials, "would have been motivated to make formulations of" the same protein "that were sufficiently stable to be approved as a therapeutic product in humans and animals." Pet. 56. But Petitioner fails to support its assertion with evidence, beyond Dr. Tarantino's hindsight-based say-so. *TQ Delta, LLC v. CISCO Sys., Inc.*, 942 F.3d 1352, 1362 (Fed. Cir. 2019) (reversing Board's obviousness determination based on expert's "ipse dixit declaration" that failed to "resist the temptation to read into the prior art the teachings of the invention in issue") (quoting *Graham v. John Deere Co.*, 383 U.S. 1, 36, (1966)).

In 2006, only three fusion proteins had been approved for commercial use, and none of them were VEGF inhibitors. Ex.2009, 3. While significant advances had been made regarding the development of therapeutic proteins, the POSA would have recognized that the development of therapeutic proteins is a process hallmarked by failure, not success. *See generally* Ex.2082. Of the 775 biologics that entered human clinical trials between 2000 and 2010, only 105 were actually

approved for commercial use, and the success rate for anticancer agents and ligand antagonists was particularly low. Ex.2082, 5.

In addition to this general background knowledge regarding drug development, the POSA would have also recognized that Fraser specifies that its "VEGF Trap"/"VEGF $Trap_{R1R2}$" formulation was frozen, thawed before use, and that "[a]ny compound remaining was stored at 4 C and used within 2 wk." Ex.1009, 1115. The POSA reading this disclosure would have assumed that the formulations were *not* stable after two weeks, because otherwise there would have been no need to include this detail in the reference. Ex.2047 ¶155.

Other aspects of Fraser would have reinforced the POSA's concerns about the stability of the Fraser formulation. For example, Fraser's formulation used a relatively high concentration (20%) of sucrose or glycerol. Ex.2047 ¶156; Ex.1009, 1115. Adding stabilizing agents in such high concentration is one way to potentially reduce the likelihood of aggregation, but at the cost of a hypertonic,[7]

[7] "Tonicity" refers to the concentration of solutes, such as sucrose, that do not permeate cell membranes at the delivery site, and thus tend to cause cells to shrink or swell. "Hypertonic" solutions are those that have a higher concentration of non-permeating solutes than the plasma or other physiological fluids at the delivery site. Ex.2047 ¶55.

viscous solution that would be suboptimal for human patient comfort. Ex.2047 ¶¶55, 156; Ex.2083, 1; Ex.2054, 65:24-66:23, 136:18-137:5; Ex.1002 ¶157. Additionally, Fraser's formulation used a citrate-phosphate buffer. Ex.1009, 1115. This buffer is a common choice in the lab where the pH value has not been finalized because it is an effective buffer across the full range of physiologic pH values. Ex.2047 ¶157. But it has drawbacks for a final formulation—for example, as discussed further in VII.D, *infra*, the phosphate species tends catalyze degradation. *Id*. Once the target pH was determined, the POSA would be motivated to select a buffer that was effective at that pH and did not have such negative effects on stability, such as histidine. Ex.2047 ¶¶157, 199.

For these reasons, the POSA would not have viewed Fraser's formulation—suitable for use in monkeys—as a suitable starting start point to avoid the "trial-and-error process of selecting and testing various combinations of commonly-used excipients to determine which were optimal for aflibercept" as Petitioner argues. Pet. 59. To the contrary, the POSA would have had several reasons to think that Fraser's formulation had not been optimized in the way Petitioner suggests. Ex.2047 ¶158. Thus, Petitioner has failed to show that a POSA would be motivated to use Fraser's formulation.

B. The POSA Would Not Be Motivated to Use SEQ ID NO:4 (Claims 4-7 at 13-16)

As explained in Part VI.A *supra*, Fraser identifies its protein using the generic term "VEGF Trap"/"VEGF $Trap_{R1R2}$," which encompasses a range of possible protein sequences, and at least two distinct VEGF $Trap_{R1R2}$ sequences were published in the prior art. Ex.2047 ¶113. Beyond Petitioner's incorrect assumption that the POSA would know Fraser used aflibercept, Petitioner does not identify anything that would lead the POSA to develop formulations of VEGF Trap proteins with SEQ ID NO:4, rather than one of the other various VEGF Trap proteins. *See* Pet. 64. As discussed above, at the time of the invention, the prior art showed that Regeneron was investigating numerous VEGF Trap proteins.

Petitioner's art does not provide a reason for a POSA to select SEQ ID NO:4 out of the disclosed VEGF $Trap_{R1R2}$ sequences. Instead, the '319 Publication discloses comparable binding performance and pharmacokinetic results for both VEGF $Trap_{R1R2}$ proteins it discusses. Ex.2047 ¶160; Ex. 1029, 74:15-76:10, Fig, 28, 82:4-83:2, Fig. 37). If anything, the '319 Publication suggests that Regeneron's preferred VEGF $Trap_{R1R2}$ sequence was *not* SEQ ID NO:4, but rather the sequence corresponding to Flt1D2Flk1D3.FcΔC1(a). Ex.2047 ¶160. The publication discloses that Regeneron had stably expressed Flt1D2Flk1D3.FcΔC1(a) and discloses an analysis of the disulfide structures and glycosylation sites of that sequence. Ex.2047 ¶160; Ex.1029, 80:20-82:2. Thus, if

a POSA sought to reproduce the performance of VEGF $Trap_{R1R2}$ that Regeneron had observed in publications such as Holash, *see* Pet. 55-56, they could have been drawn to Flt1D2Flk1D3.FcΔC1(a), *not* SEQ ID NO:4.

The POSA could have instead decided to modify the linker sequences of the VEGF $TRAP_{R1R2}$ proteins disclosed in the '319 Publication further, in hopes that an even more potent and suitable product candidate would be identified. Ex.2047 ¶161; *see generally*, Ex.2040, Table 3. Petitioner did not address the multitude of other sequences a POSA could have arrived at this way.

Out of all these options, the POSA would have known that there was no guarantee, or even likelihood, that one particular protein would be successful, or could be sufficiently stabilized. It is only with hindsight, and the knowledge that Regeneron was able to develop stable formulations of aflibercept, that Petitioner is able to argue the obviousness of claims 4-7 and 13-16.

C. Petitioner Fails to Show that the POSA Would Reasonably Expect to Achieve the Native Conformation Limitations, Either Inherently Upon Combining VEGF $Trap_{R1R2}$ with Fraser's Formulation or Through Further Optimization

1. Petitioner Cannot Rely on Inherency for the Native Conformation Limitation

Although Petitioner argues that the POSA would have been motivated to start with the prior art formulation of Fraser and Wulff, it concedes that the prior art does not expressly disclose the claimed stability. Pet. 46; D.I. 28. Petitioner

thus relies on inherency to argue that the resulting formulation would have the claimed stability. *See* Pet. 61; Ex.1002 ¶¶151-52; Ex.2054, 239:1-2. But "the use of inherency in the context of obviousness must be carefully circumscribed." *Honeywell Int'l Inc. v. Mexichem Amanco Holding S.A. De C.V.*, 865 F.3d 1348, 1354 (Fed. Cir. 2017) (internal citation omitted). Petitioner cannot rely on inherency for its obviousness combination for two reasons: the combination would not necessarily exhibit the stability shown in Dix, and even if it did, the POSA would not reasonably expect that level of stability.

"What is important regarding properties that may be inherent, but unknown, is whether they are unexpected. All properties of a composition are inherent in that composition, but unexpected properties may cause what may appear to be an obvious composition to be nonobvious." *Id.* at 1355.

Inherency cannot supply a missing limitation unless Petitioner meets its burden to show that the property is not only shown to be the natural, necessary result of the prior art combination, but also that the result is shown to be expected. *Millennium Pharms., Inc. v. Sandoz Inc.*, 862 F.3d 1356, 1367 (Fed. Cir. 2017) (district court clearly erred in finding a claim inherently obvious, because although there was no dispute that that the missing limitation was the "natural result" of the prior art combination, "[n]o expert testified that they foresaw, or expected, or would have intended, the reaction"); *Merck Sharp & Dohme Corp. v. Wyeth LLC*,

No. IPR2017-00380, 2020 WL 6533129, at *12 (P.T.A.B. Nov. 5, 2020) ("[A]n asserted inherent property in an obviousness challenge must be subjected to consideration of whether such property would have been unexpected."); *see also Reactive Surfaces Ltd., LLP v. Lg Chem Ltd.*, No. IPR2018-01520, 2020 WL 889367, at *24 (P.T.A.B. Feb. 24, 2020) (using a two-part analysis to determine that a limitation is inherent in an obviousness ground: first, finding that the limitation was inherently disclosed; and second, finding that the limitation would also have been expected).

Petitioner cannot rely on inherency for its obviousness combination here for two independent reasons: (1) Petitioner has failed to prove that the POSA would have reasonably expected the recited level of stability from Fraser's formulation as modified; and (2) the recited combination of formulation elements would not necessarily exhibit the stability shown in Dix.

a) The Board's Reliance on *In re Best* Is Misplaced

Petitioner, and the Board in the D.I., both relied on *In re Best* to overcome Fraser's lack of a disclosure regarding the native conformation of the formulation used there. Petitioner relies on *Best* for the proposition that "[m]erely claiming the results achieved by an obvious combination of ingredients does not distinguish that combination from the prior art." Pet. 59 (citing *In re Best*, 562 F.2d 1252, 1255 (C.C.P.A. 1977)). In the Decision on Institution, the Board accepted Petitioner's

reasoning and reliance on *Best*, but invited the parties to further brief the issue. D.I. 39-40.

First, *Best* cannot be interpreted to have disturbed the bedrock principle of inherency that requires a property to necessarily be present in the prior art product. That rule applies, and Petitioner must satisfy it, regardless of what *Best* holds. That is because *Best* is a case about what a patent applicant must do to "rebut[] the PTO's reasonable assertion of inherency under 35 U.S.C. § 102, or of prima facie obviousness under 35 U.S.C. § 103," during prosecution. *Best*, 562 F.2d at 1254. But this is not an appeal from prosecution, and Patent Owner does not have the burden. Here, where Petitioner is challenging an issued patent, Petitioner (not Patent Owner) has the burden and must show the claimed native conformation result is *necessarily* met by Fraser's prior art product. *See, e.g.*, *PAR Pharm., Inc. v. TWI Pharms., Inc.*, 773 F.3d 1186, 1195-96 (Fed. Cir. 2014).

Second, if *Best* were applied to this context, it would need to be read with cases like *Honeywell*, which post-date *Best* and show that it also matters whether the claimed result is unexpected. In other words, *Best* cannot be used to avoid *Honeywell* and the other recent Federal Circuit cases clarifying limits on the use of inherency in the obviousness context. Further, in *Best*, the Federal Circuit affirmed the anticipation rejections, which was basis enough for it to affirm the obviousness rejection, and so it did not need to address the differences between inherency in the

anticipation and obviousness contexts. *See Best*, 562 F.2d at 1255 n.4 (citing *In re Skoner*, 517 F.2d 947, 950 (C.C.P.A. 1975) ("[Anticipation]…is the 'ultimate or epitome of obviousness'")).

b) The POSA Would Not Have Expected the Native Conformation Result

Petitioner does not address in the context of its inherency argument whether the claimed native conformation result would have been expected, which the law requires. *Merck*, IPR2017-00380, 2020 WL 6533129, at *12; *cf.* Ex.2054, 239:15-22. Addressing reasonable expectation of success, Petitioner argues that Fraser's statement, "[a]ny compound remaining was stored at 4 C and used within 2 wk," would have led the POSA to believe Fraser's formulation exhibited "substantial stability." Ex.1009, 1115; Pet. 58. But Petitioner never argues that this statement would lead the POSA to believe that Fraser's formulation exhibited the specific native conformation result claimed. It would not have. Instead, as discussed in VII.A, this statement would have led a POSA to believe that Fraser's formulation had stability problems. Ex.2047 ¶163.

Adequate purity for a single-injection animal trial does not imply 98% native conformation after two months, or anything close to it. A protein could be stable enough for animal trials and not have 98% native conformation after two months (or even two weeks). Ex.2047 ¶¶164, 166; Ex.2050, 2049:10-17. A POSA would have known that even FDA-approved products could have native conformation

values lower than 98% in some cases, as discussed further below. VII.C.2.a); Ex.2047 ¶164; Ex.1047, 10-14; Ex.2014, 11; Ex.2021, 5; Ex.2072; Ex.2051, Fig.1, Fig.3. Further, adequate purity after two weeks does not imply 98% native conformation after two months because impurities accumulate over time. This is especially true for aggregates, which can accumulate at an accelerated pace following a lag time characterized by little aggregation. Ex.2047 ¶165; Ex.2020, 4.

Therefore, Fraser's disclosure of a formulation that must be used within two weeks in a single-injection animal trial would not have led a POSA to expect that the formulation would meet the native conformation limitations. Ex.2047 ¶166.

c) The POSA Formulating VEGF $Trap_{R1R2}$ in the Formulation of Fraser Would Not Necessarily Achieve the Claimed Stability

For reasons discussed above with respect to anticipation, Petitioner fails to show that the prior art combination would necessarily have led to the claimed stability. First, if the POSA followed Fraser and used a formulation that had been frozen and thawed, this would negatively affect stability. VI.B.1; Ex.2047 ¶¶142-143. Second, the prior art does not include enough information to lead the POSA to the exact protein sequence tested in Dix, and even seemingly small differences could lead to significant differences in the amount of protein present in native conformation. VI.B.2; Ex.2047 ¶¶35-44.

2. The POSA Would Not Be Motivated to Optimize the Formulation to Achieve 98% Native Conformation with a Reasonable Expectation of Success

As discussed in VII.C.1.c), *supra*, the POSA would not necessarily have met the native conformation limitation upon formulating VEGF $Trap_{R1R2}$ in the formulation of Fraser and Wulff. In the event the POSA did not achieve the native conformation limitation, the POSA would balance competing objectives and tradeoffs to decide whether to seek higher stability and would not expect that any protein could be formulated to 98% native conformation without significant drawbacks in the formulation.

a) Lack of Motivation

Petitioner argues that "a POSA would have been motivated to use the Fraser formulation to make a commercial aflibercept product that was as stable as possible." Pet. 60. A pharmaceutical formulator does not pursue only the goal of reducing aggregation and maximizing shelf life, but rather balances competing priorities to prevent the many different forms of physical and chemical protein degradation while creating a formulation that is acceptable to patients. Ex.2047 ¶167; Ex.1006, 6 ("[I]t would be ideal to have a pure protein in an absolutely stable formulation. In reality, however, scientists have to design formulation based on compromises that deal with several different potential problems."), 2, 4.

The POSA would recognize that it is often necessary to balance and make tradeoffs between the extent of aggregation on one hand and other formulation objectives, including protein concentration, tonicity, viscosity, and other physical and chemical instabilities, on the other. Ex.2047 ¶¶51, 175. In fact, adjusting the concentrations of Fraser's formulation components, as Dr. Tarantino's proposes, Ex.1002 ¶159, would come with potential downsides.

For example, the POSA would be aware that lowering protein concentration could reduce aggregation, but that would also increase the volume required to deliver a given dose. Ex.2047 ¶176; Ex.2053, 7, 9; Ex.2050, 470:8-14. The POSA would have been wary of reducing the concentration of protein in Fraser's formulation to improve formulation stability, because this would reduce the dose that could be administered subcutaneously. Ex.2047 ¶176; *see* Ex.2084 (disclosing subcutaneous delivery of VEGF Trap in phase I cancer trial); Ex.1016, 2798.

Adjusting the pH and buffer concentration to prevent pH changes might help stave off aggregation, but these adjustments risk catalyzing other forms of degradation. Ex.2047 ¶178. Fraser's formulation has a pH of 6.0. Ex.1009, 1115. If a formulator raised the pH, this could lead to deamidation. At a lower pH, a greater concentration of citrate-phosphate buffer would be required to achieve the same buffering capacity, but more buffer would also create a risk of more

deamidation. Ex.2047 ¶178. A lower pH could also lead to injection site pain. Ex.2047 ¶55.

Stabilizing agents such as sucrose and glycerol tend to decrease aggregation, but they may increase the viscosity and tonicity of the solution. Ex.2047 ¶177. Fraser's formulation included a large amount of stabilizing agent (20% sucrose or glycerol) that would already have caused the POSA some concern about the tonicity of the solution, *see* VII.A, *supra*, and thus the POSA would not have been motivated to improve stability by increasing the amount of stabilizing agent. Ex.2047 ¶177.

The evidence disproves Petitioner's contention that a formulator would seek absolute stability. Pet. 60-61. Rather, native conformation values lower than 98% were known to be acceptable in some cases. Ex.2047 ¶¶168-172; *see* Ex.1047, 10-14 (FDA guidance noting that acceptance criteria and analytical procedures are product-specific); Ex.2014, 11 (FDA guidance applicable to "biotechnological/biological products" defining "significant change" in part as "[a] 5 percent change in assay from its initial value"); Ex.2021, 5 (U.S. Pharmacopeia monograph for Somatropin permitting as high as 4% high molecular weight protein components). Multiple FDA-approved products were known to have less than 98% of the product present in native conformation. Indeed, the FDA-approved anti-VEGF antibody Avastin had as much as 9.6% of the protein degraded at

3 months and referred to this as a "minimal change." Ex.2047 ¶173; Ex.2072. And Immunex published stability data for its Enbrel formulation[8] showing about 2.5% of the protein not in native conformation at time 0 and after 3 months stored at 2-8ºC. Ex.2051, Fig.1, Fig.3; Ex.2047 ¶171; *see* Ex.2085 (post-priority publication disclosing 94% native conformation acceptance criteria for Enbrel).

Even the references on which Dr. Tarantino relies, Ex.1002 ¶153; Pet. 61, actually describe formulations as "stable" when a much lower fraction of the product—between 90% and 95%—was present in native conformation. Ex.1024 ¶36 ("The criteria for stability are as follows. No more than 10%, preferably 5%, of antibody monomer is degraded as measured by SEC-HPLC."); Ex.1025 ¶25; Ex.1030, 8:31-33; Ex.1026 ¶63. Additionally, these references all describe different formulations with different proteins than those disclosed in Fraser. A POSA would have no reason to conclude that because some antibody products had shown aggregation of less than 2% that this would be a reasonable target for a VEGF Trap formulation, which involves a different type of protein. Indeed,

[8] The formulation of example 2 of US20030180287A1 is identical to that of Enbrel, except that the patent does not specify the concentration used in that example. Ex.2047 ¶171; *compare* Ex.2051, ¶68 *with* Ex.2069, 1.

Dr. Tarantino cites no references in this section of his report that pertain to fusion protein formulations at all. *See* Ex.1002, ¶¶82-87, 153.

It is thus not the case that formulators *always* attempt to get as close to 100% native conformation as possible. 100% stability is of course best "[i]n an ideal world" Ex.1002, ¶81; Pet. 20 (relying on Ex.1002, ¶81), but the POSA would have been confronting the real formulation world, and the challenges it brings. *See, e.g.*, Ex.2054, 260:21-261:20 (Dr. Tarantino explaining that one product he worked on, Accutane, was commercially successful despite stability issues). The POSA who achieved acceptable stability below what is required by the claims would not be motivated to make significant formulation changes required in order to incrementally reduce aggregation to the level required by the claims. Only with the benefit of hindsight and Regeneron's claimed invention in front of her, would a formulator set aside other constraints and priorities and focus exclusively on maintaining native conformation to the greatest extent possible. Ex.2047 ¶179; Ex.1006, 2, 4, 6.

b) No Reasonable Expectation of Success

Petitioner's obviousness argument relies heavily on guides like Chang and McNally 2000, which provide generalized approaches to formulation development, but recognize the inherent differences between individual proteins and the empirical nature of formulation development. Pet. 62 (citing Ex.1013); *see*

Pet. 17-19 (citing Ex.1006). But even following the general steps laid out in McNally 2000 would at most "allow the formulation scientist to determine *whether* a solution formulation will be acceptable for a given protein." Ex.1013, 139 (emphasis added). Accordingly, McNally's protocol focuses on the types of conditions that the POSA might use to test stability, with only very high-level guidance on how to modify a formulation if problems arise. Ex.2047 ¶180; Ex.1013, 146-56.

Petitioner's argument that the POSA would nonetheless have expected to achieve the native conformation claim limitations using Fraser's formulation with aflibercept mirrors an argument that was rejected in *Cephalon, Inc. v. Watson Labs., Inc. (In re Armodafinil Patent Litig. Inc.)*, 939 F. Supp. 2d 456 (D. Del. 2013). There, defendants asserted that the POSA would have understood that the claimed polymorph "Form I" of armodafinil "has sufficient solubility and bioavailability when formulated into tablets or capsules," because the prior art "describes the efficacious use of armodafinil pharmaceutical compositions in human clinical trials." *Id.* at 499. But the court found no expectation of success, reasoning that the prior art reference "does not disclose the solid-state form of armodafinil used in its tablets and gel capsules or indicate that it consisted essentially of Form I." *Id.* at 499-500.

The same is true here. The specific VEGF $Trap_{R1R2}$ protein that Regeneron was pursuing in clinical trials may have shown promise, but the prior art does not disclose formulations with that protein that exhibit less than 2% aggregation after 2 months. Instead, as discussed above, the POSA would have had concerns about the stability of Fraser's formulation. It had to be used within two weeks after thawing, and it included relatively high levels of sucrose or glycerol, which would suggest that the protein was one that was difficult to stabilize. Ex.2047 ¶184.

Evidence of antibody formulations that existed in the art with greater than 98% stability, Pet. 21-22, does not help Petitioner. Antibodies evolved over time to possess inherent stability, but, as discussed above, VEGF Trap is not an antibody but a fusion protein. Ex.2047 ¶181; Ex.2050, 2012:13-2015:25, 2068:18-2069:7, 2049:21-2050:21, 1156:17-24; Ex.2016, 12; Ex.2017, 44. While VEGF $Trap_{R1R2}$ in Fraser appears to have some structural similarity to a monoclonal antibody based on the simplified 2D structure in Wulff, *see* Ex.1002, ¶70, in reality, both classes of proteins are structurally distinct in 3-dimensional space, with different primary, secondary, and tertiary structure. Ex.2050, 452:9-14 ("[Aflibercept] had receptor domains on it that were previously in a normal setting on the surface of a cell and bore no resemblance to the structures of an antibody."); *see* Ex.2047 ¶181; Ex.2054, 263:22-266:5. The POSA would have had no reason to expect the Fraser formulation to exhibit the same stability as different prior art

formulations, which included a different class of protein altogether. Ex.2047 ¶183. This is particularly true with respect to VEGF $Trap_{R1R2}$, because it is a fusion protein, which the POSA would have had less experience with in 2006, as compared to antibodies. Ex.2047 ¶¶181-182; Ex.2050, 450:3-6 ("[A]flibercept itself being a fusion protein was a challenge because there just wasn't that much knowledge on how to formulate and what the behaviors of those types of molecules, of fusion proteins general"), 452:15-453:5, 2068:5-2069:7, 1156:20-24; Ex.2020, 4, 6; *see also* Ex.2009, 3-4. In contrast with the strong results published for antibodies, the published results for etanercept showed native conformation around 97% at 0 months and after 3 months at 2-8ºC, and Immunex described its stability results as "surprising[]." Ex.2051, Fig.1, Fig.3, ¶23; Ex.2047 ¶182.

c) No Motivation or Expectation of Success for 99% Native Conformation (Claims 2 and 11)

Petitioner relies on no additional evidence in support of its obviousness grounds on claims 2 and 11, which require 99% native conformation. But 99% native conformation is a difficult target that was neither required nor often achieved in the prior art. Ex.2047 ¶¶186-87. Even Petitioner's own references show stability between 98% and 99%, not at least 99%. Ex.2047 ¶186; Ex.1024 Fig. 9A; Ex.1026 ¶280; Ex.1025, Table 5. Dr. Tarantino cites immunogenicity of aggregates as a concern, but relies on a single study hypothesizing that the presence of 2.5% non-monomeric protein was the cause of observed

immunogenicity; if this speculation would provide any motivation at all, it would provide only motivation to keep aggregates somewhere below 2.5%, not to reduce the level to 1% or lower. Ex.2047 ¶188; Ex.1002 ¶72; Ex.1014 (citing Ex.2086, 6).

D. Petitioner's References Do Not Render Obvious the Use of a Phosphate Buffer (Claims 9 and 18)

As discussed above in part VI.E, claims 9 and 18 require a phosphate buffer, but Fraser uses a McIlvane buffer. Petitioner has offered no argument for why the POSA would substitute phosphate into the formulation of Fraser, and thus has failed to meet its burden to show that claims 9 and 18 would have been obvious. In fact, phosphate would perform suboptimally at the pH of Fraser's formulation and would catalyze degradation of the formulation, so the POSA would not be motivated to make such a substitution. Ex.2047 ¶200.

The choice of buffer in a formulation is generally driven by the target pH. Ex.2047 ¶191. That is because a buffer works best to stabilize pH in a solution with a pH near its pKa value or values.[9] *Id.*; Ex.2087, 13. Specifically, the common advice around the priority date of the patent was to use a buffer with a

[9] The pKa is equal to the pH at which the concentrations of two species making up a buffer—a weak acid and its conjugate base—are equal. This is the pH at which the buffer has its maximum buffering capacity. *See* Ex.2047 ¶191.

pKa value within one pH unit of the solution's pH. Ex.2047 ¶191; Ex.2087, 13; Ex.2054, 123:12-21. Fraser discloses a formulation with a pH of 6.0. Ex.1009, 1115. Citrate-phosphate buffer is effective at pH 6.0 because one of its pKa values is 6.4. Ex.2047 ¶192; Ex.2087, 32. Phosphate buffer, on the other hand, has no pKa value within one pH unit of 6.0—the closest pKa value is 7.2. Ex.2047 ¶¶146, 192; Ex.2087, 32. As Dr. Klibanov explains, the POSA would not have been motivated to substitute Fraser's phosphate-citrate buffer for a phosphate buffer because the POSA would have had concerns that the phosphate buffer would do a poor job of stabilizing pH in the formulation of Fraser. Ex.2047 ¶192.

The POSA would also avoid buffers that would lead to protein degradation—particularly under Petitioner's and Dr. Tarantino's worldview that the POSA's motivation would be to achieve stability as close to 100% as possible. Ex.2047 ¶¶193-97; Pet. 20; Ex.1002, ¶81; Ex.2088, 1; Ex.2064; 46; Ex.1013, 143. Phosphate buffer was understood as of the priority date to increase the rate of deamidation and proteolytic cleavage. Ex.2047 ¶¶30-32, 193-97; Ex.2089, 5; Ex.1014, 135; Ex.2064, 13, 22, 24, 49-50; Ex.2049, 2; *see also* Ex.2016, 12. In Dr. Tarantino's words: [redacted] Ex.2054, 22:6-24:12.

These degradation concerns would also dissuade the POSA from making further adjustments to the formulation in an attempt to achieve better pH

stabilization with phosphate buffer. Increasing the pH to near phosphate's pKa value of 7.2 would increase deamidation and cleavage. Ex.2047 ¶198; Ex.1013, 141; Ex.2064, 13. A POSA would also disfavor increasing the concentration of phosphate buffer because the deamidation and cleavage effects of phosphate increase with phosphate concentration. Ex.2047 ¶198; Ex.2064, 22; *cf.* Ex.2054, 285:5-16.

The POSA could avoid both poor buffering capacity and phosphate-catalyzed degradation by selecting from an array of available buffers in common use as of the priority—for example, citrate or histidine. Ex.2047 ¶199; Ex.2090, 5; Ex.2091, 3. Substituting citrate-phosphate buffer for phosphate buffer would be proceeding "contrary to the accepted wisdom" in the art, which is "strong evidence" of non-obviousness. *In re Hedges*, 783 F.2d 1038, 1041 (Fed. Cir. 1986).

VIII. CONCLUSION

For the foregoing reasons, the challenged claims of the '992 Patent are patentable over Grounds 1 and 2.

Date: November 2, 2023

By: /Adam R. Brausa/
Adam R. Brausa, Reg. No. 60,287
MORRISON & FOERSTER LLP
425 Market Street
San Francisco, California 94105
Tel: (415) 268-6053
Email: ABrausa@mofo.com

Counsel for Patent Owner

Certification of Word Count (37 C.F.R. § 42.24)

I hereby certify that this Patent Owner's Response has 13,971 words (as counted by the "Word Count" feature of the Microsoft Word™ word-processing system), exclusive of "a table of contents, a table of authorities, mandatory notices under § 42.8, a certificate of service or word count, or appendix of exhibits or claim listing."

Dated: November 2, 2023

By: /Adam R. Brausa/
Adam R. Brausa, Reg. No. 60,287

Certificate of Service (37 C.F.R. § 42.6(e)(4))

I hereby certify that the attached PATENT OWNER'S RESPONSE – REDACTED was served on the date listed below via email (by agreement) upon the following counsel of record for Petitioner.

Lora M. Green (USPTO Reg. No. 43,541)
Yahn Lin Chu (USPTO Reg. No. 75,946)
Robert Cerwinski (*pro hac vice*, pending)
Aviv Zalcenstein (*pro hac vice,* pending)
Brigid Morris (*pro hac vice,* pending)
David Kim (USPTO Reg. No. 69,503)
GEMINI LAW LLP
40 W 24th Street, Suite 6N
New York, NY 10010
Tel.: 917-915-8832
Email: lgreen@geminilaw.com
Email: fchu@geminilaw.com
Email: rcerwinski@geminilaw.com
Email: azalcenstein@geminilaw.com
Email: bmorris@geminilaw.com
Email: dkim@geminilaw.com

Dated: November 28, 2023

/Adam R. Brausa/
Adam R. Brausa, Reg. No. 60,287