UNITED STATES PATENT AND TRADEMARK OFFICE

---

BEFORE THE PATENT TRIAL AND APPEAL BOARD

---

DELL TECHNOLOGIES INC.,
DELL INC.,
and
CISCO SYSTEMS, Inc.,
Petitioners

v.

CORRIGENT CORPORATION,
Patent Owner.

---

Case No. IPR2023-00464

U.S. Patent No. 6,957,369

---

**Petition for *Inter Partes* Review of U.S. Patent No. 6,957,369**

Mail Stop **PATENT BOARD**
Patent Trial and Appeal Board
U.S. Patent and Trademark Office
P.O. Box 1450
Alexandria, VA 22313-1450

**TABLE OF CONTENTS**

Page

I. INTRODUCTION ..... 1
II. MANDATORY NOTICES ..... 2
A. Real Parties-in-Interest ..... 2
B. Related Matters ..... 2
C. Lead and Backup Counsel ..... 2
D. Service Information ..... 4
III. PAYMENT OF FEES ..... 4
IV. REQUIREMENTS OF *INTER PARTES* REVIEW ..... 4
A. Standing ..... 4
B. Identification of Challenge and Relief Requested ..... 5
C. How the Challenged Claims Are To Be Construed Under 37 C.F.R. §42.104(b)(3) ..... 6
D. How the Challenged Claims Are Unpatentable Under 37 C.F.R. §42.104(b)(4) ..... 7
E. Supporting Evidence Under 37 C.F.R. §42.104(b)(5) ..... 7
V. THRESHOLD REQUIREMENT FOR *INTER PARTES* REVIEW ..... 7
VI. Person of Ordinary Skill in the Art ..... 8
VII. OVERVIEW OF THE ’369 PATENT ..... 8
A. Summary of the Prosecution History of the ’369 Patent ..... 11
VIII. GROUNDS OF UNPATENTABILITY ..... 11
A. Ground 1: Ke in View of Lewis Renders Obvious the Challenged Claims. ..... 11
1. Overview of Ground 1 ..... 11
a) Ke ..... 11
b) Lewis ..... 13
c) Motivation to combine Ke and Lewis ..... 14
2. Analysis of Ground 1 ..... 17

a) 1[pre]: In an electronic system that includes a main module and at least first and second subsidiary modules, each of said at least first and second subsidiary modules connected to the main module by one or more lines for carrying data, at least some of which lines are sometimes idle, the main module including a switch having ports connected to the lines, a method for self-testing the system, comprising: ..... 17

b) 1[a]: selecting a first idle line among idle lines connecting the first subsidiary module to a first port of the switch on the main module to serve as an aid line;..... 20

c) 1[b]: instructing the first subsidiary module to loop back traffic reaching the first subsidiary module via the aid line;..... 22

d) 1[c]: selecting for testing a second idle line among the idle lines connecting the second subsidiary module to a second port of the switch on the main module; ..... 23

e) 1[d]: configuring the switch to link the first and second ports; ..... 24

f) 1[e]: transmitting test traffic over the second idle line from the second subsidiary module to the main module, wherein the test traffic is conveyed via the switch to the aid line connecting to the first subsidiary module; and ..... 25

g) 1[f]: reporting that a failure has occurred if the test traffic does not return to the second subsidiary module within a predetermined period of time. ..... 25

h) Claim 2: A method according to claim 1, wherein instructing the first subsidiary module comprises configuring the first subsidiary module to loop back the traffic to the main module substantially without processing data comprised in the test traffic..... 26

i) Claim 3: A method according to claim 2, wherein the first and second subsidiary modules are configured to transmit and receive data in different, respective first and second formats, and wherein the test traffic transmitted from the second subsidiary module and looped back by the first subsidiary module is in the second format. ..... 26

j) Claim 4: A method according to claim 1, further comprising: selecting one or more further idle lines for testing among the idle lines in the system, wherein the further idle lines connect to further ports of the switch on the main module; and repeating the configuring the switch, transmitting the test traffic, and reporting that the failure has occurred with respect to the further idle lines until all the idle lines have been tested. ..... 27

k) Claim 5: A method according to claim 1, wherein the main module and said at least first and second subsidiary modules comprise cards, which are plugged into a backplane, and wherein the lines comprise traces on the backplane. ..... 28

l) Claim 6: A method according to claim 1, wherein the switch is configured to connect the lines to a network communication trunk, and wherein the traffic comprises communication traffic. ..... 29

m) Claim 7: A method according to claim 6, wherein transmitting the test traffic comprises testing the second idle line while continuing to use the lines that are not idle for carrying the data to the network communication trunk. ..... 30

n) 8[pre]: In an electronic system that includes a main module and multiple subsidiary modules, each of said multiple subsidiary modules being connected to the main module by one or more lines for carrying data, a method for self-testing the system, comprising: ..... 30

o) 8[a]: selecting first and second subsidiary modules of different types for testing among the multiple

subsidiary modules, the first and second subsidiary modules being configured to transmit and receive the data in different, respective first and second formats; ..... 30

p) 8[b]: instructing the first subsidiary module to loop back traffic reaching the first subsidiary module from the main module; ..... 31

q) 8[c]: configuring the main module to connect the first and second subsidiary modules, so that the traffic transmitted by the second subsidiary module is conveyed to the first subsidiary module via the main module and is then looped back via the main module to the second subsidiary module; and..... 31

r) 8[d]: testing the system by causing the second subsidiary module to transmit test traffic in the second format to the main module, and assessing whether the test traffic is returned intact from the first module. ..... 31

s) Claim 9: A method according to claim 8, wherein instructing the first subsidiary module comprises configuring the first subsidiary module to loop back the traffic to the main module substantially without processing data comprised in the test traffic. ..... 32

t) Claim 10: A method according to claim 8, wherein the main module and subsidiary modules comprise cards, which are plugged into a backplane, and wherein the lines comprise traces on the backplane. ..... 32

u) Claim 11: A method according to claim 8, wherein the main module comprises a switch, which is coupled to connect the lines to a network communication trunk, and wherein configuring the main module comprises configuring the switch to connect at least one of the lines of the first subsidiary module to at least one of the lines of the second subsidiary module. ..... 32

v) Claim 12: A method according to claim 11, wherein testing the system comprises testing one or more of the lines of the second subsidiary module while continuing to use at least some of the lines that are not under test for carrying the data from the subsidiary modules to the network communication trunk. ..... 33

w) Claim 13: A method according to claim 8, wherein the traffic comprises communication traffic, and wherein the first and second formats are determined respectively by different first and second communication protocols. ..... 33

x) Claim 14: A method according to claim 13, wherein one of the first and second protocols is a time domain multiplexing (TDM) protocol, while the other of the first and second protocols is a packet data protocol. ..... 34

y) 15[pre]: Modular electronic apparatus, comprising: ..... 34

z) 15[a]: a backplane, which comprises traces for carrying data between modules that are plugged into the backplane; ..... 35

aa) 15[b]: a main module, plugged into the backplane, the main module comprising a switch having ports for connection to the traces of the backplane; ..... 35

bb) 15[c]: at least first and second subsidiary modules, plugged into the backplane so as to be connected to the main module by the traces, at least some of which traces are sometimes idle; and ..... 35

cc) 15[d]: a system control processor, which is operative to select a first idle trace among idle traces connecting the first subsidiary module to a first port of the switch on the main module to serve as an aid trace, ..... 36

dd) 15[e]: to instruct the first subsidiary module to loop back traffic reaching the first subsidiary module via the aid trace, ..... 36

ee) 15[f]: to select for testing a second idle trace among the idle traces connecting the second subsidiary module to a second port of the switch on the main module, and ..... 36

ff) 15[g]: to configure the switch to link the first and second ports, ..... 37

gg) 15[h]: the system control processor being further operative to cause test traffic to be transmitted over the second idle trace from the second subsidiary module to the main module, wherein the test traffic is conveyed via the switch to the aid trace connecting to the first subsidiary module, and ..... 37

hh) 15[i]: to report that a failure has occurred if the test traffic does not return to the second subsidiary module within a predetermined period of time. ..... 37

B. Ground 2: Ke in View of Lewis and Sarkinen Renders Obvious Claims 3, 6, 8, 13, 14, 17, 21, 25, and 26 ..... 38

1. Sarkinen ..... 38

2. Claim 6 ..... 39

3. Claims 3, 8, 13, 14, 17, 21, 25, and 26 ..... 41

C. Ground 3: Cook in View of Lewis Renders Obvious the Challenged Claims ..... 42

1. Overview of Ground 3 ..... 43

a) Cook ..... 43

b) Motivation to combine Cook and Lewis ..... 45

2. Analysis of Ground 3 ..... 48

a) 1[pre]: In an electronic system that includes a main module and at least first and second subsidiary modules, each of said at least first and second subsidiary modules connected to the main module by one or more lines for carrying data, at least some of which lines are sometimes idle, the main module including a switch having ports connected to the lines, a method for self-testing the system, comprising: ..... 48

b) 1[a]: selecting a first idle line among idle lines connecting the first subsidiary module to a first port of the switch on the main module to serve as an aid line;..... 51

c) 1[b]: instructing the first subsidiary module to loop back traffic reaching the first subsidiary module via the aid line;..... 52

d) 1[c]: selecting for testing a second idle line among the idle lines connecting the second subsidiary module to a second port of the switch on the main module; ..... 54

e) 1[d]: configuring the switch to link the first and second ports; ..... 54

f) 1[e]: transmitting test traffic over the second idle line from the second subsidiary module to the main module, wherein the test traffic is conveyed via the switch to the aid line connecting to the first subsidiary module; and ..... 55

g) 1[f]: reporting that a failure has occurred if the test traffic does not return to the second subsidiary module within a predetermined period of time. ..... 56

h) Claim 2: A method according to claim 1, wherein instructing the first subsidiary module comprises configuring the first subsidiary module to loop back the traffic to the main module substantially without processing data comprised in the test traffic..... 57

i) Claim 3: A method according to claim 2, wherein the first and second subsidiary modules are configured to transmit and receive data in different, respective first and second formats, and wherein the test traffic transmitted from the second subsidiary module and looped back by the first subsidiary module is in the second format. ..... 57

j) Claim 4: A method according to claim 1, further comprising: selecting one or more further idle lines for testing among the idle lines in the system,

wherein the further idle lines connect to further ports of the switch on the main module; and repeating the configuring the switch, transmitting the test traffic, and reporting that the failure has occurred with respect to the further idle lines until all the idle lines have been tested. ..... 58

k) Claim 5: A method according to claim 1, wherein the main module and said at least first and second subsidiary modules comprise cards, which are plugged into a backplane, and wherein the lines comprise traces on the backplane. ..... 58

l) Claim 6: A method according to claim 1, wherein the switch is configured to connect the lines to a network communication trunk, and wherein the traffic comprises communication traffic. ..... 60

m) Claim 7: A method according to claim 6, wherein transmitting the test traffic comprises testing the second idle line while continuing to use the lines that are not idle for carrying the data to the network communication trunk. ..... 60

n) 8[pre]: In an electronic system that includes a main module and multiple subsidiary modules, each of said multiple subsidiary modules being connected to the main module by one or more lines for carrying data, a method for self-testing the system, comprising: ..... 61

o) 8[a]: selecting first and second subsidiary modules of different types for testing among the multiple subsidiary modules, the first and second subsidiary modules being configured to transmit and receive the data in different, respective first and second formats; ..... 61

p) 8[b]: instructing the first subsidiary module to loop back traffic reaching the first subsidiary module from the main module; ..... 61

q) 8[c]: configuring the main module to connect the first and second subsidiary modules, so that the

traffic transmitted by the second subsidiary module is conveyed to the first subsidiary module via the main module and is then looped back via the main module to the second subsidiary module; and..... 61

r) 8[d]: testing the system by causing the second subsidiary module to transmit test traffic in the second format to the main module, and assessing whether the test traffic is returned intact from the first module. ..... 62

s) Claim 9: A method according to claim 8, wherein instructing the first subsidiary module comprises configuring the first subsidiary module to loop back the traffic to the main module substantially without processing data comprised in the test traffic..... 62

t) Claim 10: A method according to claim 8, wherein the main module and subsidiary modules comprise cards, which are plugged into a backplane, and wherein the lines comprise traces on the backplane. ..... 62

u) Claim 11: A method according to claim 8, wherein the main module comprises a switch, which is coupled to connect the lines to a network communication trunk, and wherein configuring the main module comprises configuring the switch to connect at least one of the lines of the first subsidiary module to at least one of the lines of the second subsidiary module. ..... 62

v) Claim 12: A method according to claim 11, wherein testing the system comprises testing one or more of the lines of the second subsidiary module while continuing to use at least some of the lines that are not under test for carrying the data from the subsidiary modules to the network communication trunk. ..... 63

w) Claim 13: A method according to claim 8, wherein the traffic comprises communication traffic, and wherein the first and second formats

are determined respectively by different first and second communication protocols. ..... 63

x) Claim 14: A method according to claim 13, wherein one of the first and second protocols is a time domain multiplexing (TDM) protocol, while the other of the first and second protocols is a packet data protocol. ..... 64

y) 15[pre]: Modular electronic apparatus, comprising: ..... 64

z) 15[a]: a backplane, which comprises traces for carrying data between modules that are plugged into the backplane; ..... 65

aa) 15[b]: a main module, plugged into the backplane, the main module comprising a switch having ports for connection to the traces of the backplane; ..... 65

bb) 15[c]: at least first and second subsidiary modules, plugged into the backplane so as to be connected to the main module by the traces, at least some of which traces are sometimes idle; and ..... 66

cc) 15[d]: a system control processor, which is operative to select a first idle trace among idle traces connecting the first subsidiary module to a first port of the switch on the main module to serve as an aid trace, ..... 66

dd) 15[e]: to instruct the first subsidiary module to loop back traffic reaching the first subsidiary module via the aid trace, ..... 66

ee) 15[f]: to select for testing a second idle trace among the idle traces connecting the second subsidiary module to a second port of the switch on the main module, and ..... 66

ff) 15[g]: to configure the switch to link the first and second ports, ..... 66

gg) 15[h]: the system control processor being further operative to cause test traffic to be transmitted over the second idle trace from the second subsidiary

module to the main module, wherein the test traffic is conveyed via the switch to the aid trace connecting to the first subsidiary module, and ..... 66

hh) 15[i]: to report that a failure has occurred if the test traffic does not return to the second subsidiary module within a predetermined period of time. ..... 67

D. Ground 4: Cook in View of Lewis and Sarkinen Renders Obvious Claims 3, 6, 8, 13, 14, 17, 21, 25, and 26 ..... 68

1. Claim 6 ..... 68

2. Claims 3, 8, 13, 14, 17, 21, 25, and 26 ..... 71

IX. PTAB DISCRETION SHOULD NOT PRECLUDE INSTITUTION ..... 72

A. Discretionary denial under the *Fintiv* factors is not appropriate ..... 72

1. Factor 1: Institution will increase the likelihood of stay ..... 72

2. Factor 2: District Court schedule ..... 73

3. Factor 3: Petitioners' investment in IPR outweighs forced investment in litigation to date ..... 74

4. Factor 4: The Petition raises unique issues ..... 74

5. Factor 5: Whether the Petitioners and Defendants in the parallel litigation are the same party ..... 75

6. Factor 6: Other circumstances support institution ..... 75

B. PTAB should not exercise its discretion to deny institution under *Becton* and *Advanced Bionics* ..... 76

C. Discretionary denial under *General Plastic* is not appropriate ..... 76

X. CONCLUSION ..... 77

APPENDIX: CHALLENGED CLAIM LISTING ..... 80

# TABLE OF AUTHORITIES

Page(s)

**CASES**

*Advanced Bionics LLC v. MED-EL Elektromedizinische Gerate GmbH*,
IPR2019-01469, Paper 6 (PTAB Feb. 13, 2020) ..... 76

*In re Apple Inc.*,
979 F.3d 1332 (Fed. Cir. 2020) ..... 73

*Apple Inc. v. Fintiv, Inc.*,
IPR2020-00019, Paper 15 (PTAB May 13, 2020) ..... 72

*Becton, Dickinson & Co. v. B. Braun Melsungen AG*,
IPR2017-01586, Paper 8 (Dec. 15, 2017) ..... 76

*Corrigent Corp. v. Arista Networks, Inc.*,
No. 1:22-cv-00497 (D. Del.) ..... 2

*Corrigent Corp. v. Cisco Systems, Inc.*,
No. 6:22-cv-00396 (W.D. Tex.) ..... 2, 3

*Corrigent Corp. v. Dell Technologies et al.*,
No. 1:22-cv-00496 (D. Del.) ..... 2, 3

*General Plastic Indus. Co., Ltd. v. Canon Kabushiki Kaisha*,
IPR2016-01357, Paper 19 (Sept. 6, 2016) ..... 76

*HP Inc. v. Slingshot Printing LLC*,
IPR2020-01084, Paper 13 (Jan. 14, 2021) ..... 75

*HTC Corp. v. Cellular Communications Equip., LLC*,
877 F.3d 1361 (Fed. Cir. 2017) ..... 7

*Oticon Medical AB v. Cochlear Ltd.*,
IPR2019-00975, Paper 15 (PTAB Oct. 16, 2019) ..... 76

*PEAG LLC v. Varta Microbattery GMBH*,
IPR2020-01214, Paper 8 (Jan. 6, 2021) ..... 74

*Sand Revolution II, LLC v. Continental Intermodal Grp.*,
IPR2019-01393, Paper 24 (June 16, 2020) ..... 73

*Verizon v. Huawei*,
IPR2020-01079, Paper 10 (Jan. 14, 2021) ..... 74

*VMware Inc. v. Intellectual Ventures II LLC*,
IPR2020-00859, Paper No. 13 ..... 72

**REGULATIONS**

37 C.F.R. § 42.100(b) ..... 6

83 F.R. 51358 ..... 6

## PETITIONERS' EXHIBIT LIST

| Exhibit No. | Description |
|---|---|
| 1001 | U.S. Patent No. 6,957,369 ("the '369 patent") |
| 1002 | Copy of Prosecution History of the '369 patent |
| 1003 | Declaration of Dr. Nader Mir |
| 1004 | Curriculum Vitae of Dr. Nader F. Mir |
| 1005 | Complaint, *Corrigent Corp. v. Dell Technologies et al*., No. 1:22-cv-00496 (D. Del.) |
| 1006 | Complaint, *Corrigent Corp. v. Arista Networks, Inc.*, No. 1:22-cv-00497 (D. Del.), Dkt. 1 |
| 1007 | Complaint, *Corrigent Corp. v. Cisco Systems, Inc.*, No. 6:22-cv-00396 (W.D. Tex.), Dkt. 1 |
| 1008 | U.S. Patent No. 5,841,788 to Ke ("Ke") |
| 1009 | U.S. Patent No. 4,685,102 to Lewis et al. ("Lewis") |
| 1010 | U.S. Patent No. 4,074,352 to Cook et al. ("Cook") |
| 1011 | U.S. Patent Pub. No. 2003/0101426 to Sarkinen ("Sarkinen") |
| 1012 | Braden, R., Ed., "Requirements for Internet Hosts - Communication Layers," STD 3, RFC 1122, DOI 10.17487/RFC1122, October 1989, <https://www.rfc-editor.org/info/rfc1122>. |
| 1013 | Excerpt of William Stallings, Data & Computer Communications 236 (6th ed. 2000) |
| 1014 | *Corrigent Corp. v. Arista Networks, Inc.*, No. 1:22-cv-00497, (D. Del.), Dkt. 37 |
| 1015 | Western District of Texas Statistics (Docket Navigator) |
| 1016 | District of Delaware Statistics (Docket Navigator) |

# I. INTRODUCTION

Dell Technologies Inc., Dell Inc., and Cisco Systems, Inc. hereby petition for *inter partes* review of U.S. Patent No. 6,957,369 and seek cancellation of claims 1-26 ("the Challenged Claims") because they are unpatentable under 35 U.S.C. §103.

The '369 patent relates to testing traces in a backplane (or lines between modules outside of a backplane environment) by setting up a loop over which to send test traffic. According to the patent, the system can test those traces (or lines) by using a "main module" to set up a loop between two "subsidiary modules" through the "main module." After the loop is set up, test traffic is sent between the subsidiary modules over the loop to make sure the traffic is properly received. In other words, the '369 patent is directed to the very simple idea of a loopback test. The patent also discusses the advantages of performing such tests on traces or lines that are known to be "idle," or not currently in use, so that "hidden failures" can be detected.

However, this alleged advance is not new. To the contrary, both the problem and solution were disclosed in the prior art, as discussed herein. For these reasons, Petitioners respectfully request that the Board institute IPR proceedings and cancel the Challenged Claims.

# II. MANDATORY NOTICES

## A. Real Parties-in-Interest

The real parties-in-interest are Dell Technologies Inc., Dell Inc., and Cisco Systems, Inc. (collectively, "Petitioners"). No unnamed entity is funding, controlling, or directing this Petition, or otherwise has had an opportunity to control or direct this Petition or Petitioners' participation in any resulting IPR.

## B. Related Matters

The '369 patent that is the subject of this IPR Petition is also the subject of patent litigation suits brought by Patent Owner Corrigent Corporation, including against Petitioners:

- *Corrigent Corp. v. Dell Technologies et al.*, No. 1:22-cv-00496 (D. Del.) (EX1005);
- *Corrigent Corp. v. Arista Networks, Inc.*, No. 1:22-cv-00497 (D. Del.) (EX1006); and
- *Corrigent Corp. v. Cisco Systems, Inc.*, No. 6:22-cv-00396 (W.D. Tex.) (EX1007).

## C. Lead and Backup Counsel

Pursuant to 37 C.F.R. §§42.8(b)(3), 42.8(b)(4), and 42.10(a), Petitioner provides the following designation of counsel:

| **Counsel for Dell Technologies Inc. and Dell Inc.** | |
|---|---|
| **Lead Counsel** | **Back-up Counsel** |
| Stuart Rosenberg<br>(Reg. No. 60,772)<br>Gibson, Dunn & Crutcher LLP<br>1881 Page Mill Road<br>Palo Alto, CA 94304-1211<br>Tel: 650-849-5389<br>SRosenberg@gibsondunn.com | **<u>First Back-Up Counsel</u>**<br>Brian Rosenthal<br>(*pro hac vice* motion requested)<br>Gibson, Dunn & Crutcher LLP<br>200 Park Avenue<br>New York, NY 10166-0193<br>Tel: 212-351-2339<br>BARosenthal@gibsondunn.com<br><br>**<u>Additional Backup Counsel</u>**<br>Ryan Iwahashi<br>(Reg. No. 63,378)<br>Gibson, Dunn & Crutcher LLP<br>1881 Page Mill Road<br>Palo Alto, CA 94304-1211<br>Tel: 650-849-5367<br>RIwahashi@gibsondunn.com |

Petitioners respectfully request authorization to file a motion for Brian A. Rosenthal to appear before the USPTO *pro hac vice*. Mr. Rosenthal is an experienced litigating attorney and is currently serving as lead counsel for Petitioners in related matters *Corrigent Corp. v. Dell Technologies et al.*, No. 1:22-cv-00496 (D. Del.) and *Corrigent Corp. v. Cisco Systems, Inc.*, No. 6:22-cv-00396 (W.D. Tex.). Mr. Rosenthal has established familiarity with the subject matter at issue in this proceeding. Petitioners intend to file a motion to appear *pro hac vice*

under 37 C.F.R. §42.10. Pursuant to 37 C.F.R. §42.10(b), a power of attorney accompanies this Petition.

### D. Service Information

Service via hand delivery or postal mail may be made at the addresses of the lead and back-up counsel above. Petitioners hereby consent to electronic service, and service via electronic mail may be made at the email addresses provided above for the lead and back-up counsel.

## III. PAYMENT OF FEES

Pursuant to 37 C.F.R. §§42.103 and 42.15(a), the required fee is being submitted herewith. The Office is authorized to charge any fee deficiency, or credit overpayment, to deposit account no. 50-1408. Any additional fees due in connection with this Petition may be charged to the foregoing account.

## IV. REQUIREMENTS OF *INTER PARTES* REVIEW

### A. Standing

Pursuant to 37 C.F.R. §42.104(a), Petitioners certify that the ’369 patent is available for IPR and that no Petitioner is barred from requesting an IPR on the grounds identified in this Petition. Specifically, Petitioners certify that: Petitioners have not filed a civil action challenging the validity of the ’369 patent; this petition is filed not more than one year from April 19, 2022, the date on which the Petitioners were served with the complaint alleging infringement of the ’369 patent; the estoppel

provisions of 35 U.S.C. §315(e)(1) do not prohibit this IPR; and this petition is filed after the later of (a) the date that is nine months after the date of the grant of the '369 patent or (b) the termination of any post-grant review of the '369 patent.

### B. Identification of Challenge and Relief Requested

Pursuant to 37 C.F.R. §42.104(b), Petitioners request that the Board institute IPR of claims 1-26 of the '369 patent (the "Challenged Claims") under pre-AIA 35 U.S.C. §103 on the grounds described below in view of the following prior art references:

| Reference | Qualifying date | §102 |
|---|---|---|
| Ke | 11/24/1998 | §102(b) |
| Cook | 2/14/1978 | §102(b) |
| Lewis | 8/4/1987 | §102(b) |
| Sarkinen | 11/27/2001 | §102(e) |

The '369 patent is a U.S. patent resulting from an application filed May 30, 2002. Because the application does not claim benefit to any other application, the Challenged Claims are entitled to a priority date no earlier than May 30, 2002.

Each of the references cited above is therefore prior art. Ke, Cook, and Lewis are U.S. patents that issued in 1998, 1978, and 1987, respectively. Sarkinen published from an application filed November 27, 2001. Although Ke was cited during prosecution, it was not applied in combination with Lewis and was not applied in the manner suggested in this Petition; the other three references were not cited at all during prosecution. *See* EX1001 at 1 (listing references cited).

In this *inter partes* review, Petitioners apply the above references and assert the following grounds of rejection under 35 U.S.C. §103:

| Ground | '369 Patent Claims | Basis for Rejection[1] |
|---|---|---|
| 1 | 1-26 | Obvious over Ke and Lewis |
| 2 | 3, 6, 8, 13, 14, 17, 21, 25, and 26 | Obvious over Ke, Lewis, and Sarkinen |
| 3 | 1-26 | Obvious over Cook and Lewis |
| 4 | 3, 6, 8, 13, 14, 17, 21, 25, and 26 | Obvious over Cook, Lewis, and Sarkinen |

### C. How the Challenged Claims Are To Be Construed Under 37 C.F.R. §42.104(b)(3)

A claim subject to *inter partes* review "shall be construed using the same claim construction standard that would be used to construe a claim in a civil action under 3 U.S.C. §282(b), including construing the claim in accordance with the ordinary and customary meaning of such claim as understood by one of ordinary skill in the art and the prosecution history pertaining to the patent." 37 C.F.R. §42.100(b) (November 13, 2018); 83 F.R. 51358 (2018). Petitioners do not believe any constructions have an impact on the invalidity analyses set forth herein.[2] *See*

[1] All obviousness grounds include the knowledge of a POSITA.

[2] Claim construction proceedings are underway in the *Cisco* litigation. In accordance with 37 C.F.R. § 42.100(b), Petitioners will request leave to submit

*(Cont'd on next page)*

*HTC Corp. v. Cellular Communications Equip., LLC*, 877 F.3d 1361, 1367-68 (Fed. Cir. 2017) (affirming the Board absent an express construction of a term).

### D. How the Challenged Claims Are Unpatentable Under 37 C.F.R. §42.104(b)(4)

The following sections explain how the Challenged Claims are unpatentable under the statutory grounds identified above, including where each element of the claim is found in the prior art patents or printed publications.

### E. Supporting Evidence Under 37 C.F.R. §42.104(b)(5)

The exhibit numbers of the supporting evidence relied upon, and the relevance of the evidence to the challenged claims, including an identification of specific portions of the evidence that support the challenge, are provided below. The technical information and grounds for unpatentability explained in the petition are further supported by the Declaration of Dr. Nader Mir (EX1003). A List of Exhibits is included in this paper pursuant to 37 C.F.R. §42.63(e).

## V. THRESHOLD REQUIREMENT FOR *INTER PARTES* REVIEW

Under 35 U.S.C. §314(a), institution of *inter partes* review requires "a reasonable likelihood that the petitioners would prevail with respect to at least one

---

the district court's claim construction order as soon as it becomes available so that it is timely made of record in the proceeding and can be considered by the Board.

of the claims challenged in the petition." This petition meets this threshold for each of the asserted grounds of unpatentability.

## VI. Person of Ordinary Skill in the Art

The alleged invention relates to testing lines or traces between modules optionally connected via a backplane. EX1001, Abstract. A person of ordinary skill in the art ("POSITA") at the time of the alleged invention (May 2002) would have had a degree in electrical engineering, computer engineering, or a similar discipline, with at least two years of relevant industry or research experience (or additional education). EX1003, ¶17. The relevant experience would include a working understanding of backplanes and other printed circuit boards, including the connections thereto. *Id.* More experience can substitute for less education and vice versa.

## VII. OVERVIEW OF THE '369 PATENT

The '369 patent is directed to a "loop back" test to determine whether lines or traces (especially those known to be idle or inactive) are functioning properly "without intruding on normal traffic carried by the system's active lines." EX1001, 2:26-29. Without self-testing, the '369 patent states that failures in lines, especially idle lines, may go undetected. *Id.*, 1:11-15.

The '369 patent describes a principal embodiment comprising a backplane system in which a "main module" and two or more "subsidiary modules" are

plugged into the backplane and communicate over traces on the printed circuit board of the backplane. *Id.*, 1:11-36; 1:61-2:4; 2:40-47; 3:12-20; 3:51-4:37; 6:54-67. Figure 1 (annotated below) depicts this arrangement:

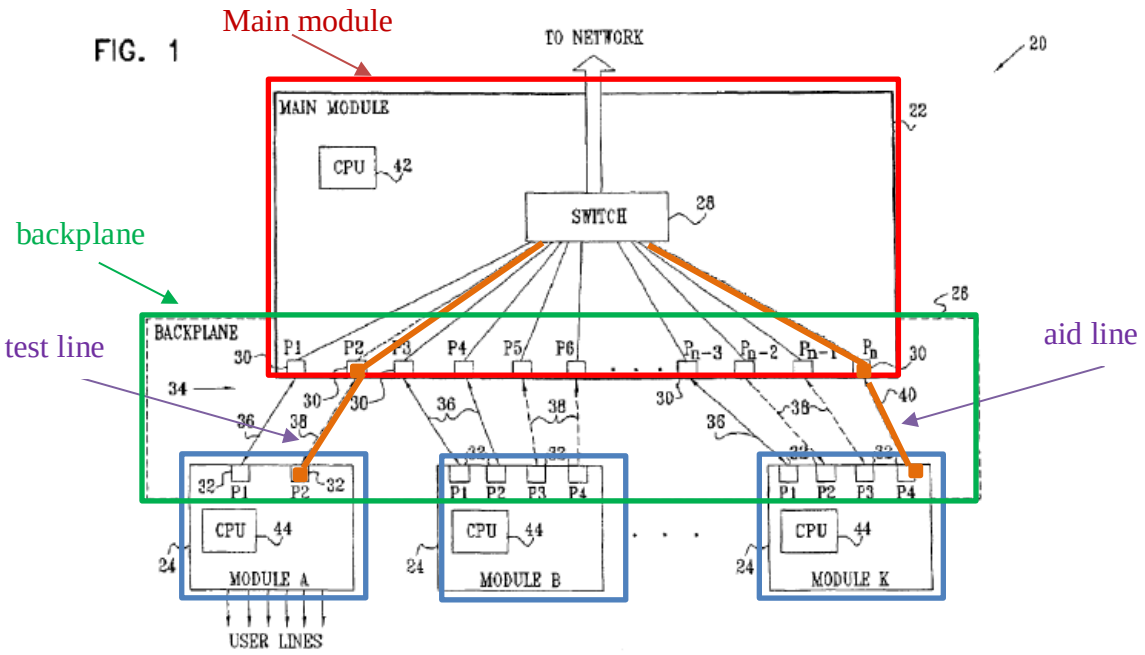


The patent explains that the disclosed backplane configuration was commonly known, stating the invention relies on "existing components in the system." *Id.*, 1:25-26; 2:29-32. As shown above, the main module 24 is connected to the network. *Id.*, 1:67-2:2; 5:13-14. It contains a system control processor 42 and a switch 28. *Id.*, 1:30-32; 5:1-31. The main module is then connected via the backplane 28 to two or more "subsidiary modules" 24. *Id.*, 1:25-30. To test the system without interrupting service, the idle lines 38 are tested instead of the active lines 36. *Id.*, 5:26-31.

The patent describes a six-step process to test an idle line for "hidden failures." *Id.*, Fig. 2, 5:55-6:39.

1. The main module selects an idle line that connects a first subsidiary module to a port of the switch of the main module to serve as the "aid line" 40, an idle line in which traffic will be looped back through. *Id*., 5:61-67.
2. The main module then instructs the first subsidiary module to loop back all traffic via the aid line. *Id*., 5:63-6:9.
3. The main module selects another idle line connected to a second subsidiary module to be the test line 38. *Id.*, 6:10-13.
4. The main module then configures its switch to connect the aid line and the test line, creating a loop or a "virtual connection" (depicted as orange in the figure above). *Id*., 6:14-17.
5. The main module then instructs the second subsidiary module to send test traffic over the configured loop-back. *Id*., 6:18-22.
6. The main module determines a failure has occurred if the test traffic does not return properly. *Id*., 6:23-39.

This process, with a few variations, is claimed in all independent claims. *Id*., cls. 1, 8, 15, 21. For example, certain claims do not require a backplane, and certain claims do not require the lines or traces to be idle when tested.

### A. Summary of the Prosecution History of the '369 Patent

During prosecution, the examiner, *inter alia*, rejected original claims 1-4, 6-9 and 11-14 as anticipated by two prior art references. EX1002, 68. During an Examiner Interview, it was discussed that an amendment which included "wherein the test traffic is conveyed via the switch to the aid line connecting to the first subsidiary module" would overcome the prior art challenge. Because the Examiner was not presented with any reference (such as is now presented with Lewis) that sets up a testing loop between a main module and a subsidiary module through a switch, the Examiner allowed the claims after the discussion wherein the clause was added, and the patent issued on October 18, 2005. EX1002, 111; EX1001, [45]. As discussed below, that sole ground of patentability is rebutted by the Lewis reference, when combined with a backplane testing system such as Ke or Cook.

## VIII. GROUNDS OF UNPATENTABILITY

### A. Ground 1: Ke in View of Lewis Renders Obvious the Challenged Claims.

The combination of Ke and Lewis ("Ke-Lewis") renders obvious claims 1-26 of the '369 patent.

#### 1. Overview of Ground 1

##### a) Ke

Ke discloses a method for detecting errors in the traces associated with backplanes. According to Ke, "[b]ackplane testing involves testing the interconnects

to ensure that the assembled backplane is functioning properly." EX1008, 1:26-28. More specifically, Ke-Figure 1 depicts the structure for backplane testing. There is a board that has the "bus master controller" 30 that may perform the testing of the backplane by driving the other boards via a slave interface 32. *Id.*, 3:24-36. The master board and the other boards are all plugged into a backplane 24. *Id.*, 3:16-36.

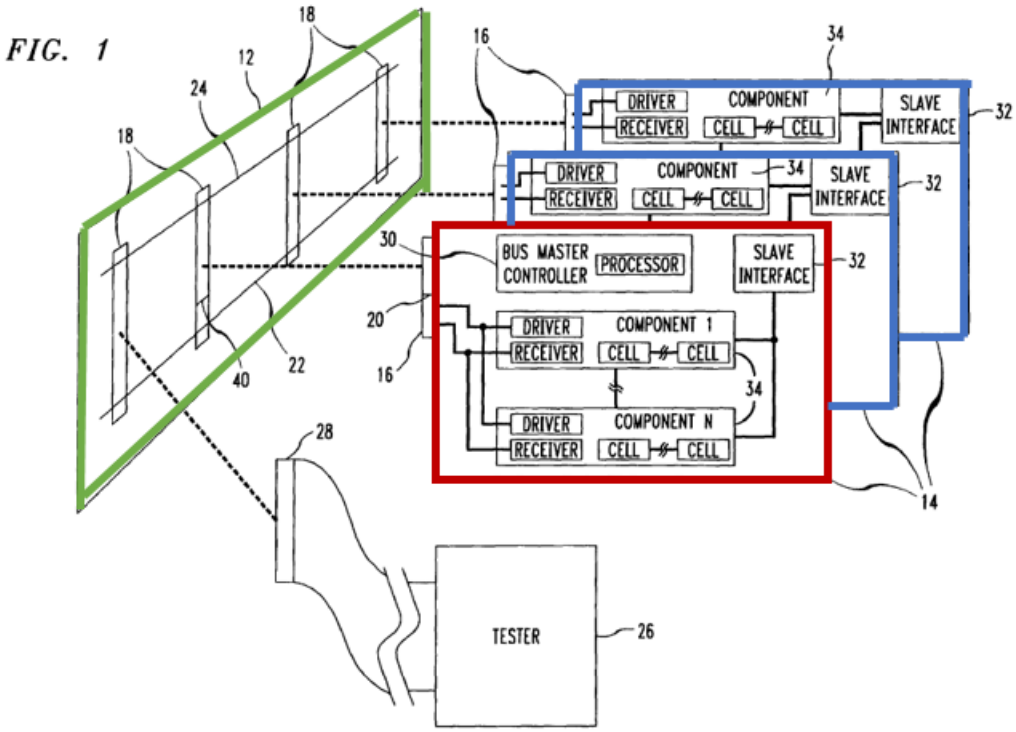


EX1008, Fig. 1.[3]

Ke further explains that when the bus master drives the testing, messages may be "addressed" to each of the other boards using protocols communicated via the backplane 24. *Id.*, 3:28-35.

[3] Annotations added on all figures unless otherwise noted.

Ke acknowledges that there are different ways to test backplanes in the prior art and states that, because backplanes are highly configurable, it may be difficult to test certain configurations. *Id.*, 1:30-2:19. Ke discloses one such testing configuration for boundary testing where the backplane connections are tested one at a time by toggling the connections on and off to test one connection at a time. *Id.*, 3:61-4:40. When errors in the system are detected, they may be reported and classified to the system. *Id.*, 4:1-12.

**b) Lewis**

Lewis discloses a "loopback" system test circuit that can be used to test links between peripherals to detect failures in components. EX1009, Abstract, 1:25-38. In connection with Figure 2, Lewis explains that the circuit switch 10—which communicates with a control processor 7 and message switch 9—can set up a communication loop for testing the connection with peripherals 12A and 13. EX1009, 3:47-60. In this example, the circuit switch sets up a loop 16 that connects peripheral 12A with peripheral 13 through the circuit switch 10.

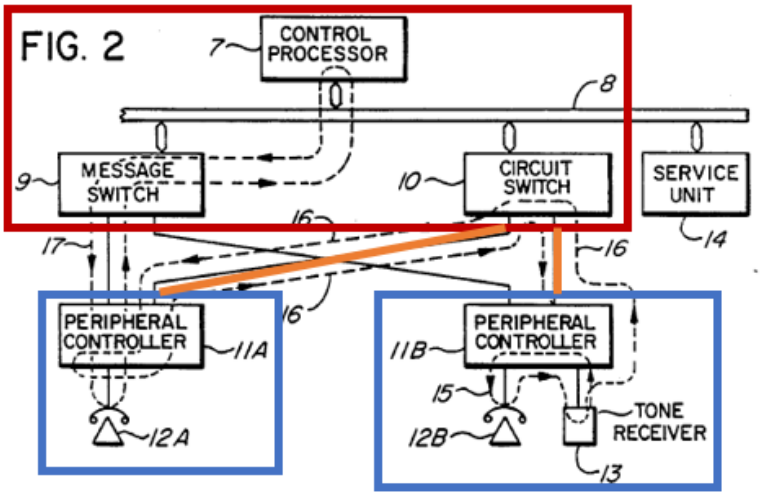


*Id.*, Fig. 2.

According to Lewis, the control processor can send a message to peripheral 12A to trigger a loopback test. The loopback test would travel via loop 16 from 12A to circuit switch 10 to peripheral 13. Peripheral 13 would be configured to loop back the message to circuit switch 10 and then back to peripheral 12A. *Id.*, 4:42-54. Lewis further explains that testing should be performed during times when the links are idle. *Id.*, 2:19-20, 14:31-34. After the loopback test is performed, the result of the test is reported back to the message switch. *Id.*, 4:34-41.

**c) Motivation to Combine Ke and Lewis**

A POSITA would have been motivated to combine the backplane testing described in Ke with the loopback testing described in Lewis as depicted below.

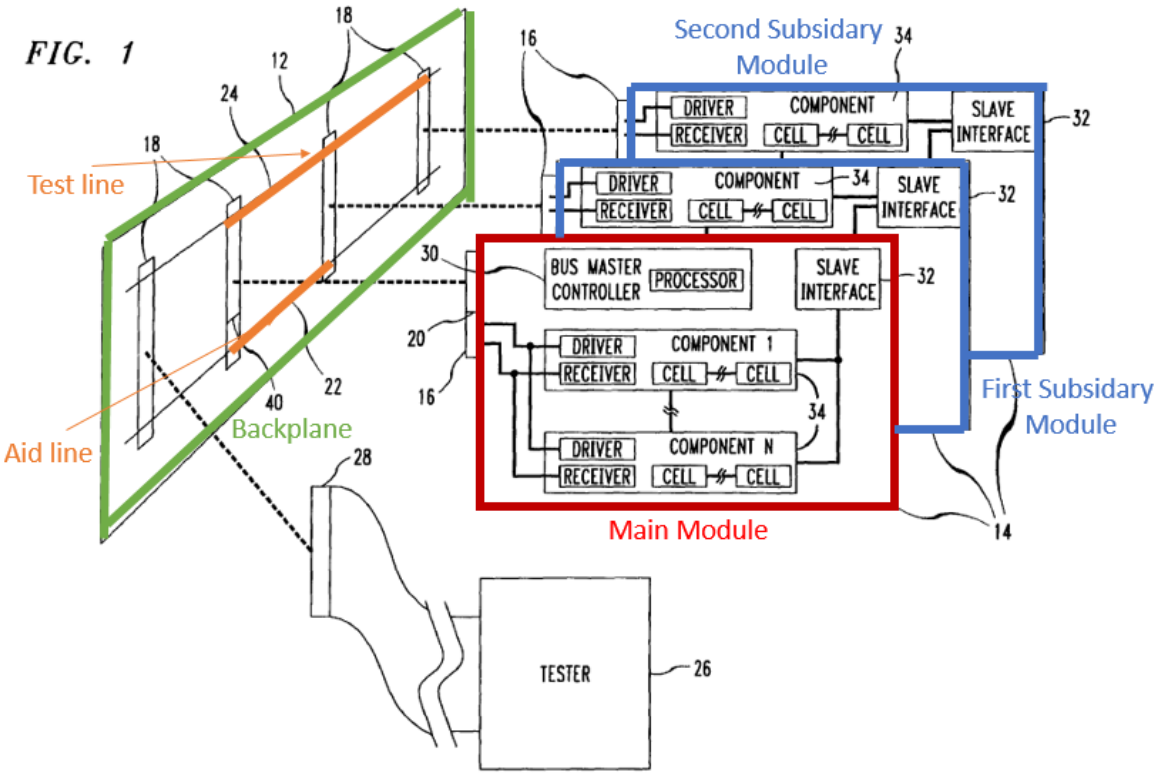


EX1008, Fig. 1.

The main module would set up an aid line with the first subsidiary module and a test line with the second subsidiary module, as disclosed in Lewis. The backplane modules in Ke would then perform the loopback test described in Lewis set forth above, where the main module routes the test packet between the first and second subsidiary modules over the test and aid lines. EX1009, 4:42-54. This combination would have been obvious to a POSITA for multiple reasons.

**First**, both references are generally directed to testing connections within a system with multiple components. Ke recites a master controller that directs testing in other boards plugged into a backplane. EX1008, 3:24-37. Lewis recites a similar

set up where the control processor/circuit switch direct the testing of peripheral controllers. EX1009, 3:47-60. A POSITA would have been motivated to combine the testing protocol in Lewis in the structure disclosed in Ke because a POSITA would have understood the benefits of a loopback test in the context of a backplane with a master controller. EX1003, ¶74.

**Second**, Ke makes clear that its backplanes are highly configurable with many different board types, so the testing configurations should be adaptable and flexible. EX1008, 1:30-2:18. For example, Ke explains that there are many types of boards that may be plugged into a backplane, like memory and input/output devices. *Id.*, 1:65-67. A POSITA therefore would have been motivated to look at other testing configurations, like the one disclosed in Lewis for the creation of a loopback test. It would have been obvious to a POSITA that testing in a backplane could benefit from such a loopback test because there are many times when the different boards in a backplane need to communicate with each other. EX1003, ¶75. A POSITA would have recognized that there are times when data needs to be transferred to and from different boards on the backplane, e.g., from memory to an input-output device. A POSITA therefore would have been motivated to apply the loopback testing between two peripherals in Lewis to the structure in Ke to test the connection between two boards in the backplane. *Id.*, ¶76.

**Third**, a POSITA would have been motivated to test the backplane lines while they were idle as disclosed in Lewis. EX1009, 2:19-20. As Ke explains, testing the backplane traces may require disabling certain parts to avoid damage to circuit components. EX1008, 2:29-35. A POSITA would understand that the best time to disable those parts and perform the test is when the lines are otherwise idle because that would avoid disrupting traffic when the lines were in use. EX1003, ¶77.

**Reasonable expectation of success**. A POSITA would have had a reasonable expectation of success to implement the testing in Lewis in the backplane structure from Ke because Ke acknowledged that there were multiple possible techniques for testing backplanes. EX1008, 1:30-2:18. A POSITA would therefore have a reasonable expectation of success to apply different testing techniques to the backplane structure in Ke, including the one from Lewis. EX1003, ¶78. Furthermore, Ke also explains that the bus master may control the test and send test data to different boards by addressing the data to those boards. EX1008, 3:28-35. A POSITA would have therefore understood that the loopback testing between specific peripherals in Lewis could be employed in Ke by using the master bus controller to control testing between specific boards. EX1003, ¶78.

### 2. Analysis of Ground 1

#### a) 1[pre]: In an electronic system that includes a main module and at least first and second subsidiary modules, each of said at least first and second subsidiary modules connected to the main module by

> **one or more lines for carrying data, at least some of which lines are sometimes idle, the main module including a switch having ports connected to the lines, a method for self-testing the system, comprising:**

To the extent the preamble is limiting, Ke-Lewis render obvious 1[pre]. Ke discloses an "***electronic system*** having a backplane to be tested." EX1008, 2:55-56 (emphasis added). That electronic system has a card with the bus master controller 30 (main module) and at least two other cards (first and second subsidiary modules). The main module and subsidiary modules are connected by a backplane 24 (one or more lines for carrying data). *Id.*, Fig. 1; EX1003, ¶80.

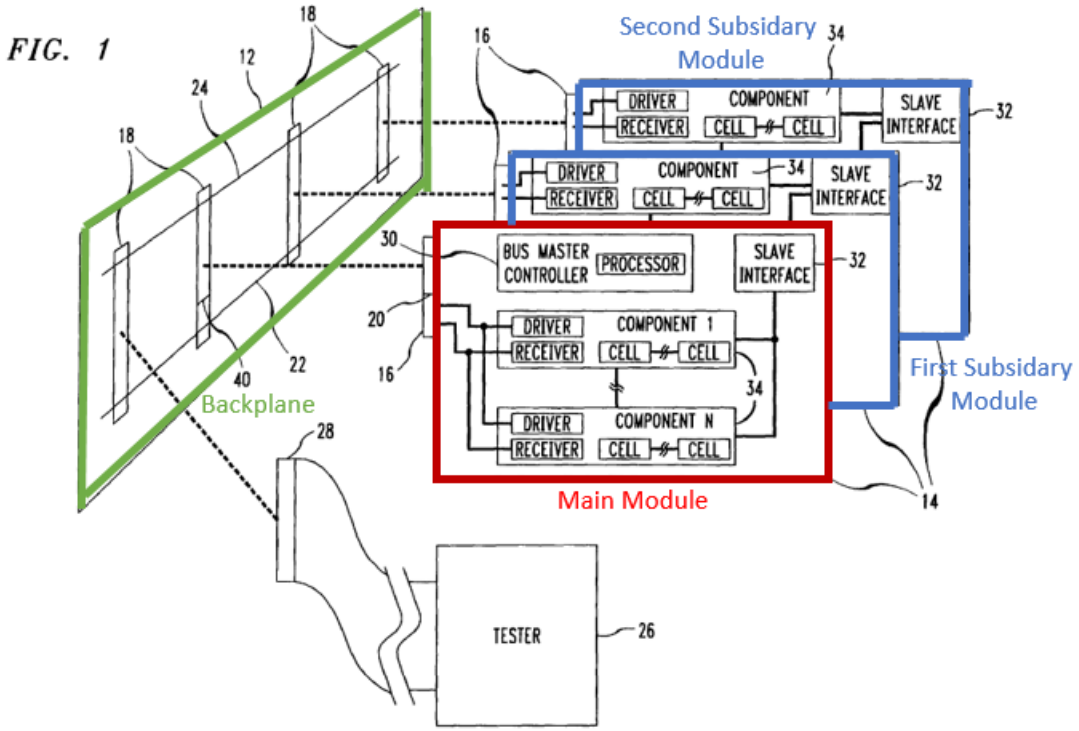


EX1008, Fig. 1.

This same basic structure from Ke is mirrored in Lewis, and it would have been obvious to combine Ke with Lewis as set forth above. EX1003, ¶81. Like Ke,

Lewis describes a circuit switch 10—which communicates with a control processor 7 and message switch 9—(main module) that can set up a communication loop for testing the connection with peripherals 12A (second subsidiary module) and 13 (first subsidiary module). EX1009, 3:47-60.

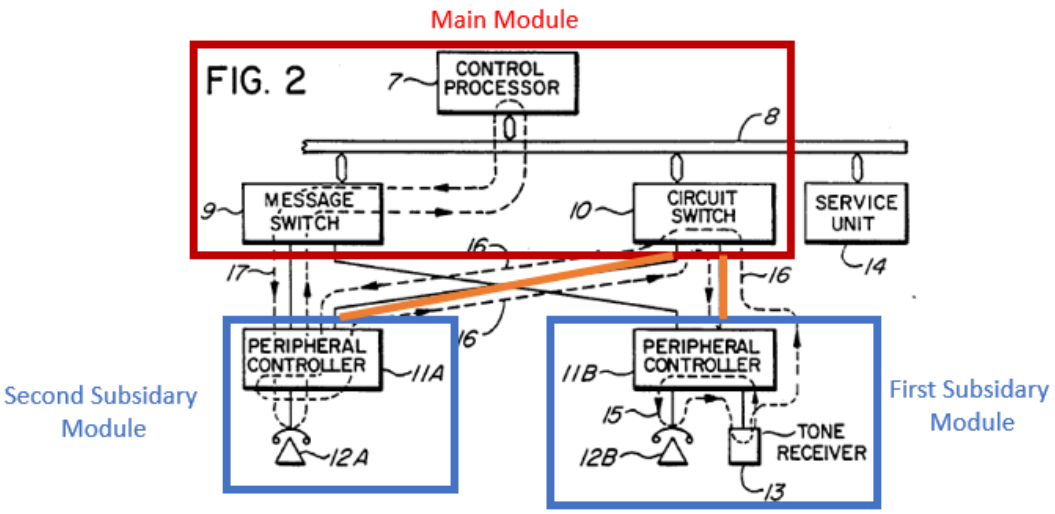


*Id.*, Fig. 2.

Ke further discloses that the lines may sometimes not be in use or disabled. EX1008, 3:61-67. Alternatively, it would have been obvious to a POSITA that the lines in the backplane would sometimes be idle or not in use. EX1003, ¶82. Lewis also makes clear that there are times when the lines or connections are idle and that testing should be done at the times when such lines are idle, and it also would have been obvious to a POSITA to combine Ke with Lewis for the reasons disclosed above. EX1009, 2:19-20; EX1003, ¶82.

Ke discloses that the main module acts as a switch by driving the testing, and addressing data to be sent to different boards. EX1008, 3:61-67; EX1003, ¶83. Ke

further explains that the main module is connected to the backplane by a number of pins on the edge connectors 16. EX1008, 3:16-23. A POSITA would have understood that these pins act as the interconnect or port between the board and the backplane, which connect it to other interconnects. EX1003, ¶¶83-84.

Ke further discloses that the main module performs testing on the interconnects in the backplane (self-testing). EX1008, Abstract, Title; EX1003, ¶84.

**b) 1[a]: selecting a first idle line among idle lines connecting the first subsidiary module to a first port of the switch on the main module to serve as an aid line;**

Ke-Lewis discloses 1[a]. Lewis discloses setting up a loopback test when the lines are idle. EX1009, 2:19-20. When the lines are idle, the system sets up a loopback circuit by choosing an aid line between the first subsidiary module and the circuit switch in the main module. *Id.*, 4:23-41.

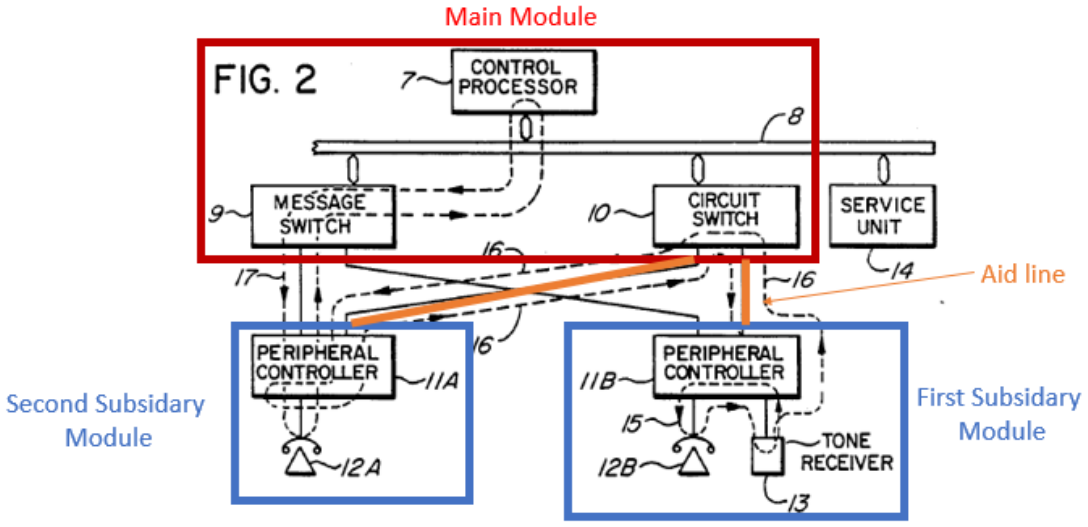


*Id.*, Fig. 2.

This same set up is mirrored by the structure in Ke as depicted below.

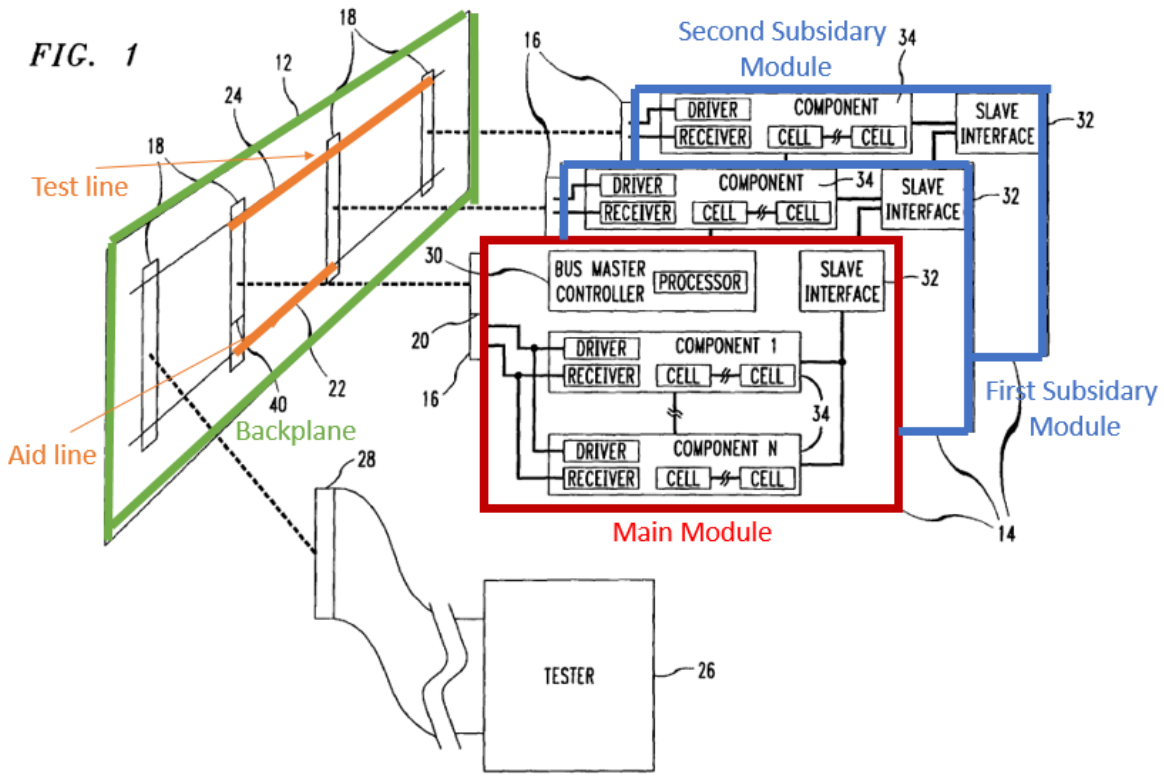


EX1008, Fig. 1.

As described in 1[pre], moreover, the modules in Ke are connected via a port, so a POSITA would have understood that the first subsidiary module is connected to a port in the main module; that is how connections between the modules are made in the backplane in Ke. EX1003, ¶¶86-89. Alternatively, it would have been obvious to a POSITA that the module could have been connected to the main module via a port. *Id.*

**c) 1[b]: instructing the first subsidiary module to loop back traffic reaching the first subsidiary module via the aid line;**

Ke-Lewis discloses 1[b]. Lewis discloses that the control processor of the main module sets up a communication loop between the first and second subsidiary modules. EX1009, 4:23-41. A POSITA would have understood that this requires instructing the first subsidiary module to loop back traffic it receives back to the circuit switch in the main module. EX1003, ¶91. Indeed, a POSITA would have understood that the first subsidiary module must be instructed to loopback the traffic or else the traffic would not be returned as described in Lewis: "the control processor 7 can send messages through bus 8 via the message switch 9 to the peripheral controller 11A, and to circuit switch 10 to set up a circuit switch loop 16 from a peripheral telephone 12A interface, through peripheral controller 11A, circuit switch 10, peripheral controller 11B to the tone receiver 13 interface." EX1009, 4:42-49.

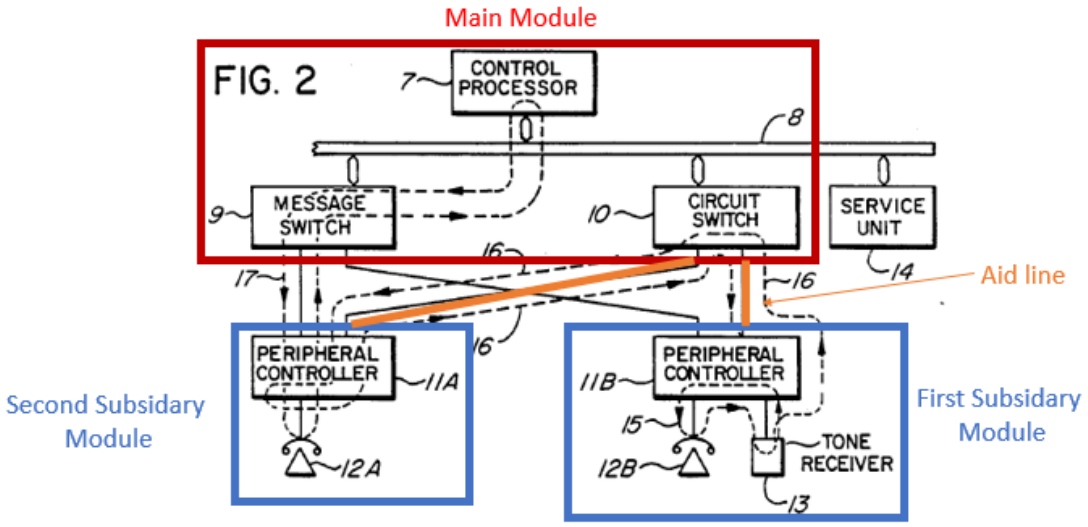

EX1009, Fig. 2.

Alternatively, it would have been obvious to a POSITA the main module would instruct the subsidiary module to loop back traffic so that traffic is, in fact, looped back. *Id*. at ¶91.

**d) 1[c]: selecting for testing a second idle line among the idle lines connecting the second subsidiary module to a second port of the switch on the main module;**

Ke-Lewis discloses 1[c]. When the system sets up the loopback as described in 1[a], the system also selects a line between the second subsidiary module and the circuit switch of the main module for testing ("test line"). EX1009, 4:23-41.

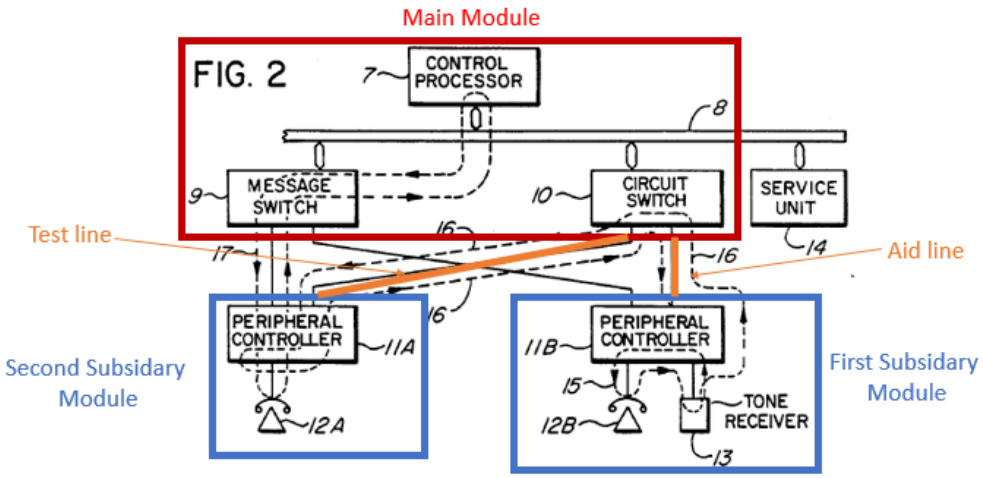


*Id.*, Fig. 2.

For the same reasons in 1[a], a POSITA would have understood or found it obvious that the second subsidiary module is connected via a port to the circuit switch. EX1003, ¶¶93-95.

**e) 1[d]: configuring the switch to link the first and second ports;**

Ke-Lewis discloses 1[d]. A POSITA would have understood that, when the loopback is set up as described in 1[a] to 1[c], the circuit switch is configured to link the first and second ports to form the loopback circuit. *Id.*, ¶96.

For example, a POSITA would have understood that the switch must be configured to link the ports that would set up the loop as described in Lewis: "the control processor 7 can send messages through bus 8 via the message switch 9 to the peripheral controller 11A, and to circuit switch 10 to set up a circuit switch loop 16 from a peripheral telephone 12A interface, through peripheral controller 11A, circuit switch 10, peripheral controller 11B to the tone receiver 13 interface." *Id.*, 4:42-49.

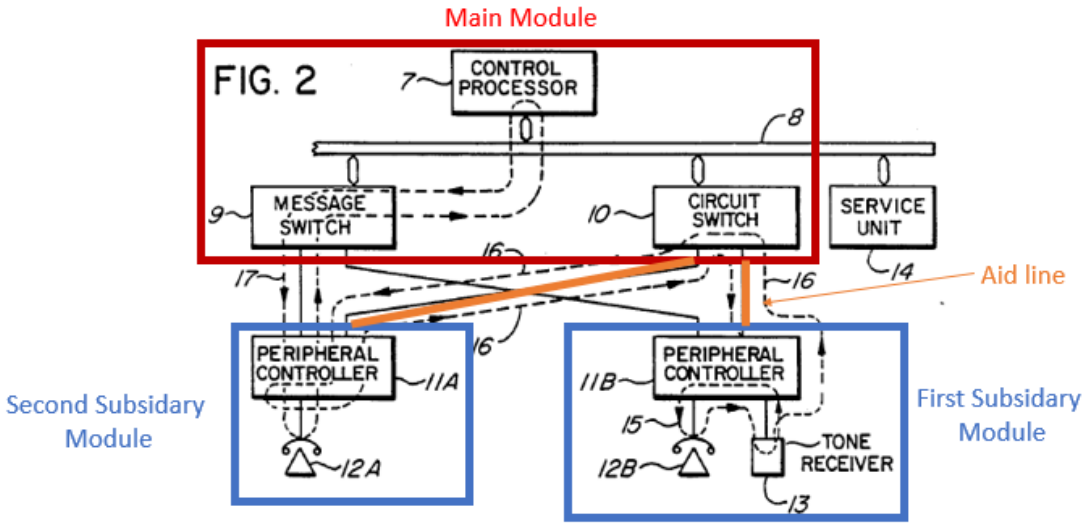


*Id.*, Fig. 2.

Alternatively, it would have been obvious to a POSITA that the main module in Ke would link the first and second ports to close the loop between the subsidiary modules. EX1003, ¶96.

**f) 1[e]: transmitting test traffic over the second idle line from the second subsidiary module to the main module, wherein the test traffic is conveyed via the switch to the aid line connecting to the first subsidiary module; and**

Ke-Lewis discloses 1[e]. Lewis discloses sending a test message over the test line from the second subsidiary module to the circuit switch and that the circuit switch then send the test message to the first subsidiary module over the aid line. EX1009, 4:23-41. Ke similarly discloses sending test data to subsidiary modules. EX1008, 3:61-4:40. A POSITA therefore would have found it obvious that Ke-Lewis discloses this limitation. EX1003, ¶¶98-99.

**g) 1[f]: reporting that a failure has occurred if the test traffic does not return to the second subsidiary module within a predetermined period of time.**

Ke-Lewis discloses 1[f]. Lewis discloses that the main module acknowledges receiving the return signal if the test message returns successfully. EX1009, 14:3-25. A POSITA would have understood that, if the main module did not receive the test message from the second subsidiary module within a predetermined period of time, it would have reported the failure by logging the error or notifying the user. EX1003, ¶100. This is the normal way errors are handled when test packets are sent.

For example, since the 1980s, every POSITA would be familiar with the ping command, which sends out a test packet and will wait to receive a response or time out if a response is not received. *Id.*, ¶¶100-102; EX1012, 52-58 (describing timeouts in ICMP).

At minimum, it would have been obvious to a POSITA for an error to be reported if a response to a test packet was not received for the same reasons. EX1003, ¶¶100-101.

**h) Claim 2: A method according to claim 1, wherein instructing the first subsidiary module comprises configuring the first subsidiary module to loop back the traffic to the main module substantially without processing data comprised in the test traffic.**

Ke-Lewis discloses claim 2 for the same reasons as claim 1[b]. Lewis discloses that the message just passes through the loop and back to the main module. EX1009, 4:34-39. A POSITA would have understood that this means it went through the first subsidiary module without substantial processing of the test traffic since it is simply "passed through the loop." *Id.*; EX1003, ¶¶103-104.

**i) Claim 3: A method according to claim 2, wherein the first and second subsidiary modules are configured to transmit and receive data in different, respective first and second formats, and wherein the test traffic transmitted from the second subsidiary module and**

**looped back by the first subsidiary module is in the second format.**

Ke-Lewis discloses claim 3. EX1003, ¶105; *see* Claim 2. Ke discloses that messages are sent via protocols communicated over the bus and that test vector data is specifically loaded into the message for test traffic transmitted to the subsidiary modules (second format). EX1008, 3:30-37. A POSITA would have understood that a different format of message (without the test vector data) would have been used for normal messages (first format). EX1003, ¶105. In sum, Ke explicitly discloses that the first and second subsidiary modules are configured to transmit and receive data in different formats, including a second format for test traffic. Alternatively, it would have been obvious to a POSITA that the subsidiary modules would need to send and receive data in multiple formats because different messages passed between the modules in Ke may require different information and would have been organized differently in a different format. *Id.*, ¶106.

**j) Claim 4: A method according to claim 1, further comprising: selecting one or more further idle lines for testing among the idle lines in the system, wherein the further idle lines connect to further ports of the switch on the main module; and repeating the configuring the switch, transmitting the test traffic, and reporting that the failure has occurred with respect to the further idle lines until all the idle lines have been tested.**

Ke-Lewis discloses claim 4. As explained in 1[a] and 1[c], Lewis discloses selecting multiple idle lines that connect to ports on the circuit switch in the main

module. Lewis further explains that the same process can be used for loops of any length. A POSITA therefore would have understood that all idle lines could be added to the same loop for testing. *Id.*, ¶108. Alternatively, it would have been obvious to a POSITA that the same process for choosing idle lines could be repeated after the test is done and that the test should be repeated until all the idle lines have been tested. *Id*. Indeed, a POSITA would have known how to create a loop in the testing logic to simply run the test multiple times until all idle lines are tested. *Id*. A POSITA would have been motivated to do so to make sure all idle lines are still working. *Id.*

**k) Claim 5: A method according to claim 1, wherein the main module and said at least first and second subsidiary modules comprise cards, which are plugged into a backplane, and wherein the lines comprise traces on the backplane.**

Ke-Lewis discloses claim 5. As detailed for 1[pre], Ke discloses a card with the bus master controller 30 (main module) and at least two other cards (first and second subsidiary modules). The main module and subsidiary modules are connected by a backplane 24 with traces thereon.

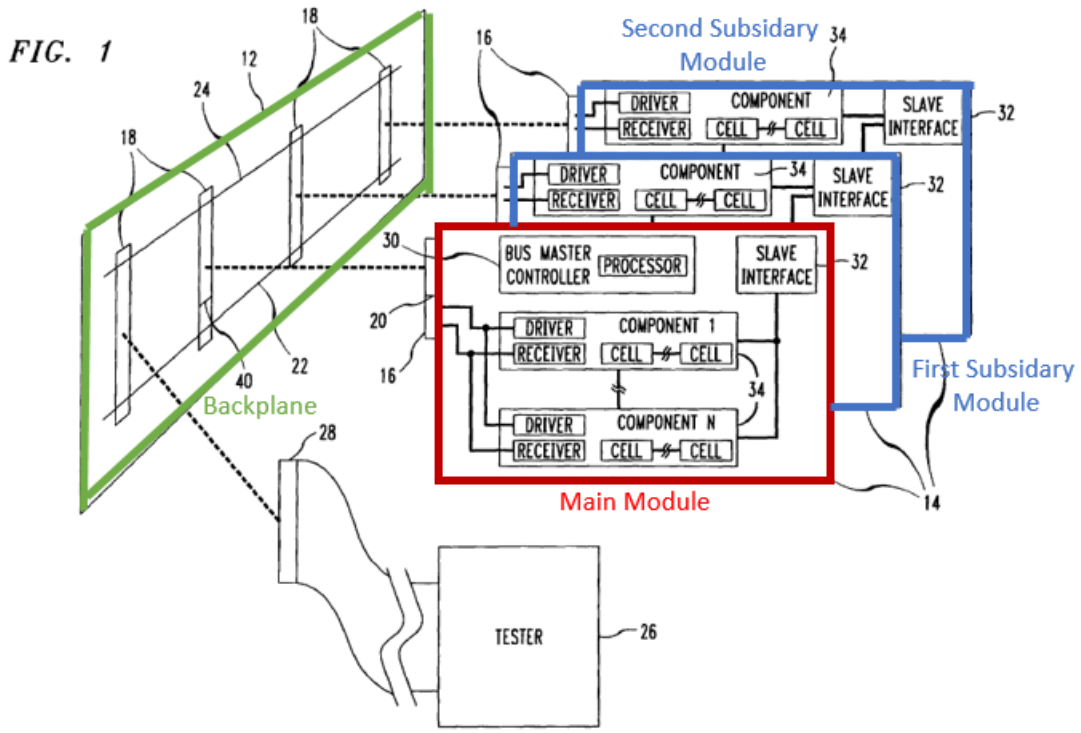


EX1008, Fig. 1; EX1003, ¶110.

A POSITA would have understood that Ke discloses that the modules are plugged into the backplane because that is how cards are connected to a backplane. EX1003, ¶111. Furthermore, Ke states that the cards may be "misplugged" into the backplane, which implies they are plugged into the backplane. EX1008, 1:23-32; EX1003, ¶111.

**l) Claim 6: A method according to claim 1, wherein the switch is configured to connect the lines to a network communication trunk, and wherein the traffic comprises communication traffic.**

Ke-Lewis discloses claim 6. Although Ke does not explicitly discuss the types of electrical systems to which it may be associated, a POSITA would have understood that one such electrical system that commonly used backplanes would

have been a network switch or other type of network device. EX1003, ¶113. A POSITA would have further understood one of the cards inserted into the backplane, like the main module, would have a connection to the broader internet, and other modules could connect to the internet through that network trunk. *Id.*

**m) Claim 7: A method according to claim 6, wherein transmitting the test traffic comprises testing the second idle line while continuing to use the lines that are not idle for carrying the data to the network communication trunk.**

Ke-Lewis discloses claim 7. Lewis discloses only sending the test messages after the link is determined to be idle. EX1009, 14:30-34, 2:19-20. A POSITA would have understood that the test is therefore conducted on idle lines while other lines that are not idle continued to be used for carrying normal data. EX1003, ¶115.

Although Ke suggests temporarily disabling boards that are not currently being tested, the loopback test from Lewis would not have required disabling the other boards because the loopback would narrowly target certain cards. *Id.*, ¶116.

**n) 8[pre]: In an electronic system that includes a main module and multiple subsidiary modules, each of said multiple subsidiary modules being connected to the main module by one or more lines for carrying data, a method for self-testing the system, comprising:**

Ke-Lewis discloses 8[pre] for the same reasons as 1[pre]. *Id.*, ¶118.

**o) 8[a]: selecting first and second subsidiary modules of different types for testing among the multiple subsidiary modules, the first and second subsidiary**

**modules being configured to transmit and receive the data in different, respective first and second formats;**

Ke-Lewis discloses 8[a] for the same reasons as 1[a], 1[c], and claim 3. *Id.*, ¶119. Ke-Lewis further discloses that the first and second subsidiary modules are different types because Ke discloses that each of the cards connected could be different types (e.g., memory, input-output). EX1008, 1:65-67. Lewis likewise discloses different types of modules. EX1009, 4:23-41, Fig. 2. A POSITA therefore would have understood that the first and second modules could be different types of modules. EX1003, ¶119.

**p) 8[b]: instructing the first subsidiary module to loop back traffic reaching the first subsidiary module from the main module;**

Ke-Lewis discloses 8[b] for the same reasons as 1[b]. *Id.*, ¶121.

**q) 8[c]: configuring the main module to connect the first and second subsidiary modules, so that the traffic transmitted by the second subsidiary module is conveyed to the first subsidiary module via the main module and is then looped back via the main module to the second subsidiary module; and**

Ke-Lewis discloses 8[c] for the same reasons as 1[c]. *Id.*, ¶122.

**r) 8[d]: testing the system by causing the second subsidiary module to transmit test traffic in the second format to the main module, and assessing**

**whether the test traffic is returned intact from the first module.**

Ke-Lewis discloses 8[d] for the same reasons as 1[f] and claim 3. *Id.*, ¶123. Lewis discloses that the main module acknowledges receiving the return signal if the test message returns successfully. EX1009, 14:3-25. A POSITA would understand that the main module would make sure that the test message returned intact before it acknowledged a receipt because the test would not be successful if the message did not return intact or did not return. EX1003, ¶123.

**s) Claim 9: A method according to claim 8, wherein instructing the first subsidiary module comprises configuring the first subsidiary module to loop back the traffic to the main module substantially without processing data comprised in the test traffic.**

Ke-Lewis discloses claim 9 for the same reasons as claim 2. *Id.*, ¶125.

**t) Claim 10: A method according to claim 8, wherein the main module and subsidiary modules comprise cards, which are plugged into a backplane, and wherein the lines comprise traces on the backplane.**

Ke-Lewis discloses claim 10 for the same reasons as claim 5. *Id.*, ¶126.

**u) Claim 11: A method according to claim 8, wherein the main module comprises a switch, which is coupled to connect the lines to a network communication trunk, and wherein configuring the main module comprises configuring the switch to connect at least**

**one of the lines of the first subsidiary module to at least one of the lines of the second subsidiary module.**

Ke-Lewis discloses claim 11 for the same reasons as claim 6 and 1[d]. *Id.*, ¶127. A POSITA would understand that, by linking the first and second ports, the switch is connecting lines of the first and second subsidiary modules. *Id.* At minimum, it would have been obvious to a POSITA that the switch could connect the lines of the first and second subsidiary modules so they can send the test traffic to each other. *Id.*

**v) Claim 12: A method according to claim 11, wherein testing the system comprises testing one or more of the lines of the second subsidiary module while continuing to use at least some of the lines that are not under test for carrying the data from the subsidiary modules to the network communication trunk.**

Ke-Lewis discloses claim 12 for the same reasons as claim 7. *Id.*, ¶129.

**w) Claim 13: A method according to claim 8, wherein the traffic comprises communication traffic, and wherein the first and second formats are determined respectively by different first and second communication protocols.**

Ke-Lewis discloses claim 13 for the same reasons as claim 3. *Id.*, ¶130. It would have been obvious to a POSITA that the test traffic in the second format could have used a different protocol than normal traffic, which would result in different protocols because the test traffic is handled by the modules differently than normal

traffic, and therefore a POSITA would have been motivated to use a different protocol so the module knows how to handle the test traffic. *Id.*

**x) Claim 14: A method according to claim 13, wherein one of the first and second protocols is a time domain multiplexing (TDM) protocol, while the other of the first and second protocols is a packet data protocol.**

Ke-Lewis discloses claim 14. *Id.*, ¶132. It would have been obvious to a POSITA that multiple different protocols could be used by the first and second modules, including TDM protocols and packet data protocols. For example, a POSITA would have recognized that a module could use a TDM protocol for communications with other modules and a packet data protocol to communicate with other devices over a network. EX1013, 236. A POSITA would have understood that a packet data protocol is used to communicate over an IP-based network. EX1003, ¶132.

**y) 15[pre]: Modular electronic apparatus, comprising:**

To the extent the preamble is limiting, Ke-Lewis render obvious 15[pre]. Ke discloses an electronic apparatus, comprising a backplane into which multiple cards may be plugged. EX1008, 2:55-56, Fig.1. A POSITA would have understood that the cards can be inserted and removed in a modular fashion, making the disclosure in Ke a modular electronic apparatus. EX1003, ¶134.

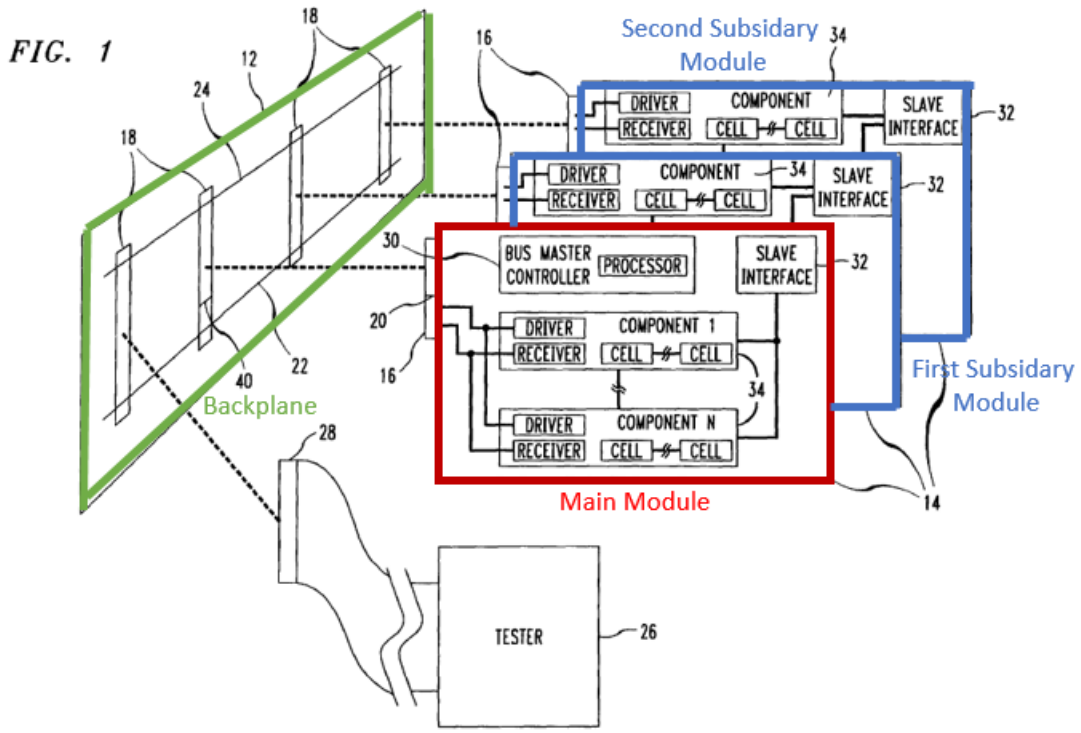


**z) 15[a]: a backplane, which comprises traces for carrying data between modules that are plugged into the backplane;**

Ke-Lewis discloses 15[a] for the same reasons as claim 5. *Id.*, ¶136.

**aa) 15[b]: a main module, plugged into the backplane, the main module comprising a switch having ports for connection to the traces of the backplane;**

Ke-Lewis discloses 15[b] for the same reasons as 1[pre] and claim 5. *Id.*, ¶137.

**bb) 15[c]: at least first and second subsidiary modules, plugged into the backplane so as to be connected to the main module by the traces, at least some of which traces are sometimes idle; and**

Ke-Lewis discloses 15[c] for the same reasons as 1[pre] and claim 5. *Id.*, ¶138.

**cc) 15[d]: a system control processor, which is operative to select a first idle trace among idle traces connecting the first subsidiary module to a first port of the switch on the main module to serve as an aid trace,**

Ke-Lewis discloses 15[d] for the same reasons as 1[a]. *Id.*, ¶139. Ke further discloses a processor as part of the master controller in the main module that controls the testing. EX1008, Fig.1; EX1003, ¶139.

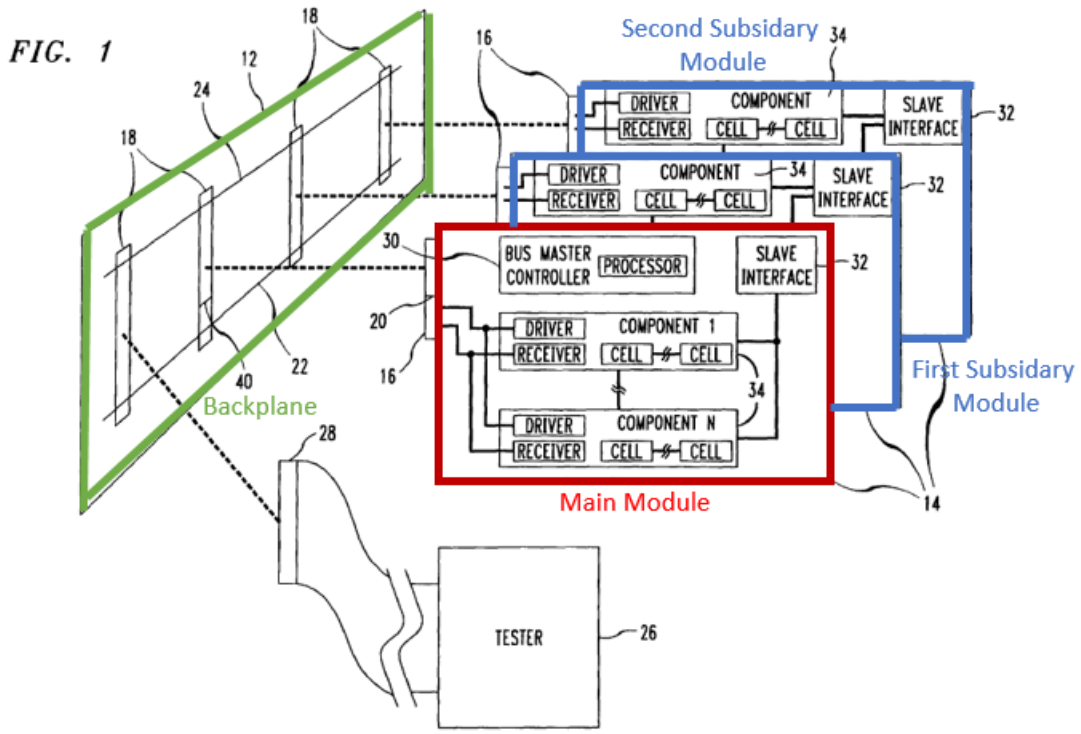


**dd) 15[e]: to instruct the first subsidiary module to loop back traffic reaching the first subsidiary module via the aid trace,**

Ke-Lewis discloses 15[e] for the same reasons as 1[b]. EX1003, ¶141.

**ee) 15[f]: to select for testing a second idle trace among the idle traces connecting the second subsidiary**

**module to a second port of the switch on the main module, and**

Ke-Lewis discloses 15[f] for the same reasons as 1[c]. *Id.*, ¶142.

**ff) 15[g]: to configure the switch to link the first and second ports,**

Ke-Lewis discloses 15[g] for the same reasons as 1[d]. *Id.*, ¶143.

**gg) 15[h]: the system control processor being further operative to cause test traffic to be transmitted over the second idle trace from the second subsidiary module to the main module, wherein the test traffic is conveyed via the switch to the aid trace connecting to the first subsidiary module, and**

Ke-Lewis discloses 15[h] for the same reasons as 1[e]. *Id.*, ¶144.

**hh) 15[i]: to report that a failure has occurred if the test traffic does not return to the second subsidiary module within a predetermined period of time.**

Ke-Lewis discloses 15[i] for the same reasons as 1[f]. *Id.*, ¶145.

The remaining claims are disclosed for the reasons already set forth above, as detailed in the table below:

| Limitation | Reason Disclosed |
|---|---|
| 16 | 2 (EX1003, ¶146) |
| 17 | 3 (EX1003, ¶147) |
| 18 | 4 (EX1003, ¶148) |
| 19 | 6 (EX1003, ¶149) |

| Limitation | Reason Disclosed |
|---|---|
| 20 | 7 (EX1003, ¶150) |
| 21[pre] | 15[pre] (EX1003, ¶151) |
| 21[a] | 15[a] (EX1003, ¶152) |
| 21[b] | 15[b] (EX1003, ¶153) |
| 21[c] | 15[c] (EX1003, ¶154) |
| 21[d] | 15[d]-15[i] (EX1003, ¶155) |
| 22 | 2 (EX1003, ¶156) |
| 23 | 11 (EX1003, ¶157) |
| 24 | 12 (EX1003, ¶158) |
| 25 | 13 (EX1003, ¶159) |
| 26 | 14 (EX1003, ¶160) |

### B. Ground 2: Ke in View of Lewis and Sarkinen Renders Obvious Claims 3, 6, 8, 13, 14, 17, 21, 25, and 26

To the extent the additional limitations of claim 3, 6, 8 13, 14, 17, 21, 25, and 26 are not rendered obvious by Ke-Lewis, it would have been obvious to combine Ke and Lewis with Sarkinen.

#### 1. Sarkinen

Sarkinen discloses a method for a network switch or router that utilizes a backplane with mutliple line and fabric cards connected thereto. EX1011, [0012].

For example, Figure 3 depicts a fabric interface (308), multiple line cards (304, 306), and fabric cards (312, 316) all plugged into a midplane 314. *Id.*, ¶55.

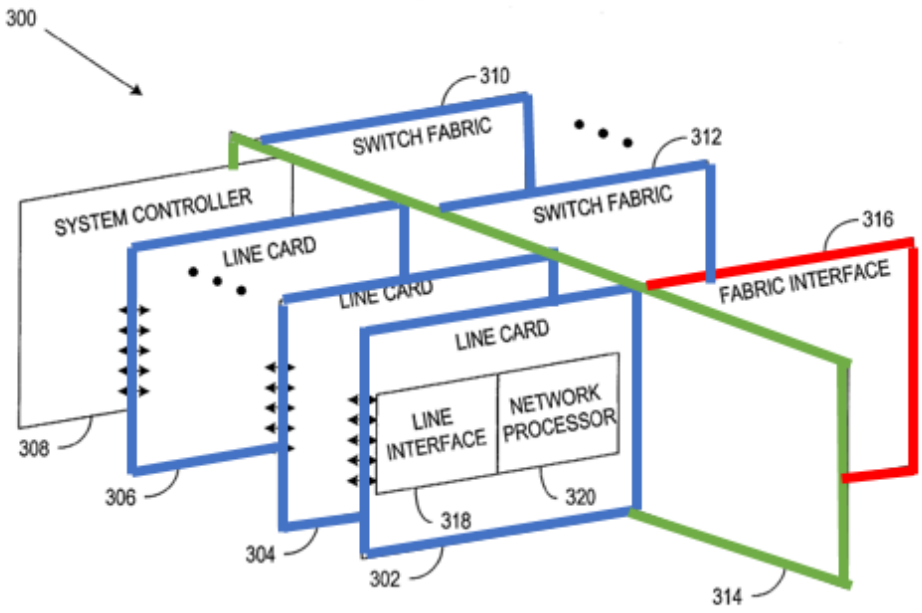


***FIG. 3***

EX1011, Fig. 3.

Sarkinen makes clear that the midplane can also be implemented as a backplane. *Id.*, ¶¶12, 54.

**2. Claim 6**

Although Ke is not specific about the type of backplane devices it can be used on, Sarkinen makes clear that one such backplane device is a network switch or router with line cards and fabric cards (subsidiary modules) controlled by a fabric interface (main module), all of which are plugged into a backplane or midplane 314. Sarkinen further makes clear that the line cards include a network line interface,

which plugs into a network link or trunk to a broader network. *Id.*, ¶13. A POSITA would have understood that the traffic transmitted over the line cards and fabric cards is communication traffic for routing over the network to which the switch/router is connected. EX1003, ¶163.

It would have been obvious to a POSITA that Sarkinen discloses one type of backplane device to which the testing disclosed in Ke and Lewis could apply. *Id.*, ¶164. A POSITA would have been motiviated to apply the testing from Ke and Lewis to ensure that the line cards' traces were functioning properly for the same reasond described above. *Id.* Indeed, a POSITA would have recognized that the path between two line cards would be a loop that would commonly be used and should be tested periodically when the trace is idle. A POSITA would have understood that the fabric interface would act as a switch to help address traffic between the two line cards and that the fabric interface would operate in between the two line cards and could set up the paths between the line cards as shown in Figure 4.

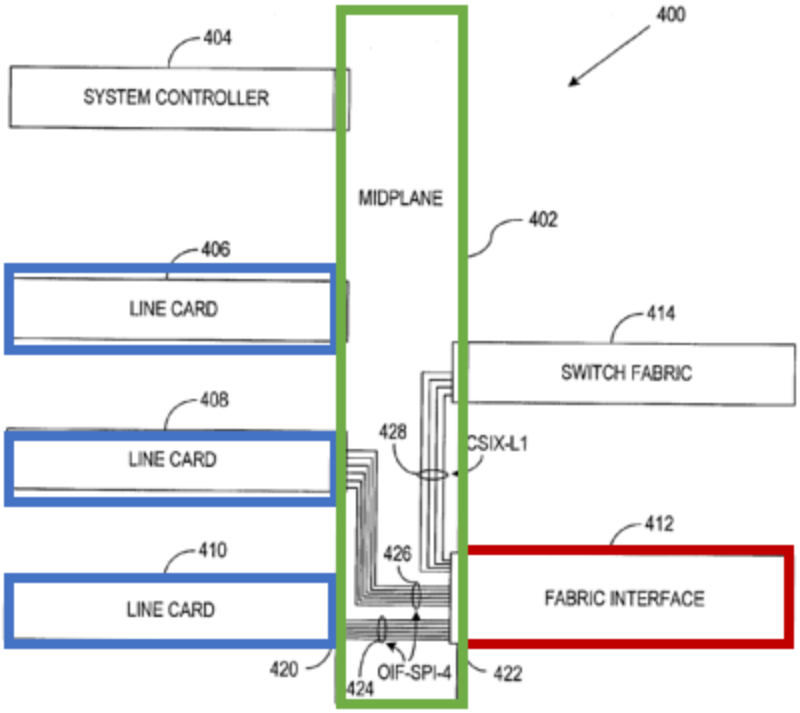


*FIG. 4*

### 3. Claims 3, 8, 13, 14, 17, 21, 25, and 26

Claims 3, 8, 13, 14, 17, 21, 25, and 26 further recite that the subsidiary modules transmit and receive data in at least two different formats. To the extent Ke-Lewis does not render obvious this limitation, it would have been obvious to combine Ke-Lewis with Sarkinen because Sarkinen is an example of a network switch with the backplane architecture disclosed in Ke as set forth above. Sarkinen makes clear that the switch may support multiple protocols. EX1011, ¶58. A POSITA would have understood that, for example, each line card may support a different protocol and that each protocol would have a different format associated with the protocol. EX1003, ¶167. A POSITA would have understood that the

protocols are typically defined by a standard, which sets forth different formats for each protocol. *Id.*, ¶169. It would have been obvious to a POSITA that the different line cards that support different protocols may support data in different formats. *Id.* It also would have been obvious to a POSITA that the subsidiary modules would have had to have chosen a common data format to communicate a test message, and it would have been obvious to choose one of the data formats already in use by the line card. *Id.*

Claims 13 and 25 further recite that the different formats are associated with a different protocol. It would have been obvious to a POSITA that the different format of data traffic received by the line cards are associated with different line cards, and Sarkinen explicitly discloses that the switch supports different protocols. EX1011, ¶58; EX1003, ¶168.

Claims 14 and 26 recite that one protocol is a TDM protocol and the other is a packet data protocol. A POSITA would have been familiar with both TDM protocols and packet data protocols and would have understood that the line cards on the same system could have supported both TDM protocols and packet data protocols. EX1003, ¶169.

### C. Ground 3: Cook in View of Lewis Renders Obvious the Challenged Claims

The combination of Cook and Lewis ("Cook-Lewis") renders obvious claims 1-26 of the '369 patent.

### 1. Overview of Ground 3

#### a) Cook

Cook discloses a computer system with multiple "line control processors" ("LCPs") that are connected to each other via a "backplane." EX1010, 28:62-29:7. According to Cook, the LCPs are organized into groups of eight to form an LCP Base Module ("LCPBM"). *Id.*, 4:39-5:4. Cook explains that the each LCPBM also has a "distribution card unit" ("DCU") that interfaces with the I/O Translator ("IOT"). The DCU and IOT send to and receive data from the peripheral devices connected to the LCPs. *Id.* Figure 2 depicts this structure:

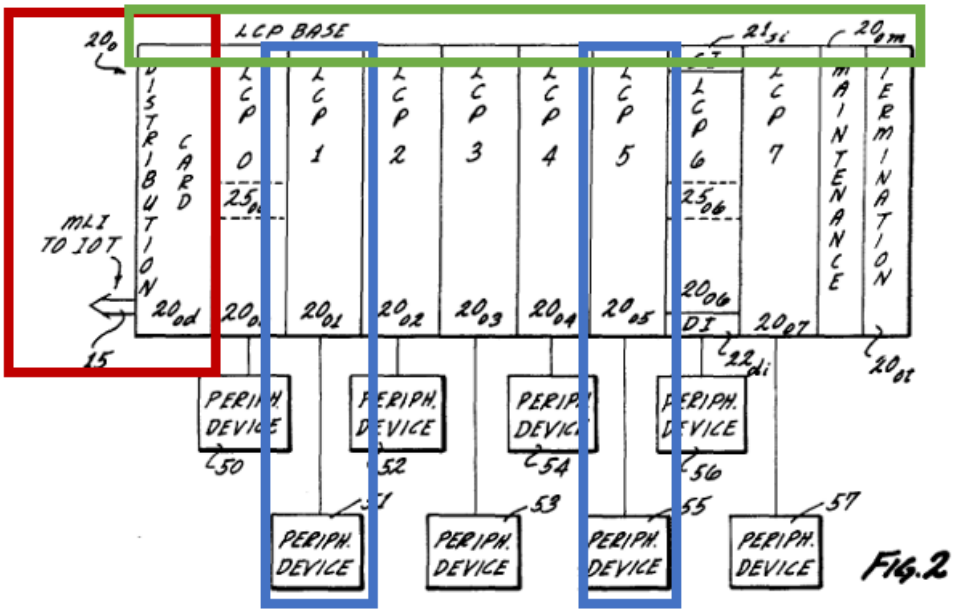


The LCPs, each of which has an associated peripheral device, are connected to each other and the distribution card unit via a backplane. *Id.* Figure 6 depicts this

same structure in a slightly different way, showing that the backplane connects each LCP/peripheral with the DCU and IOT.

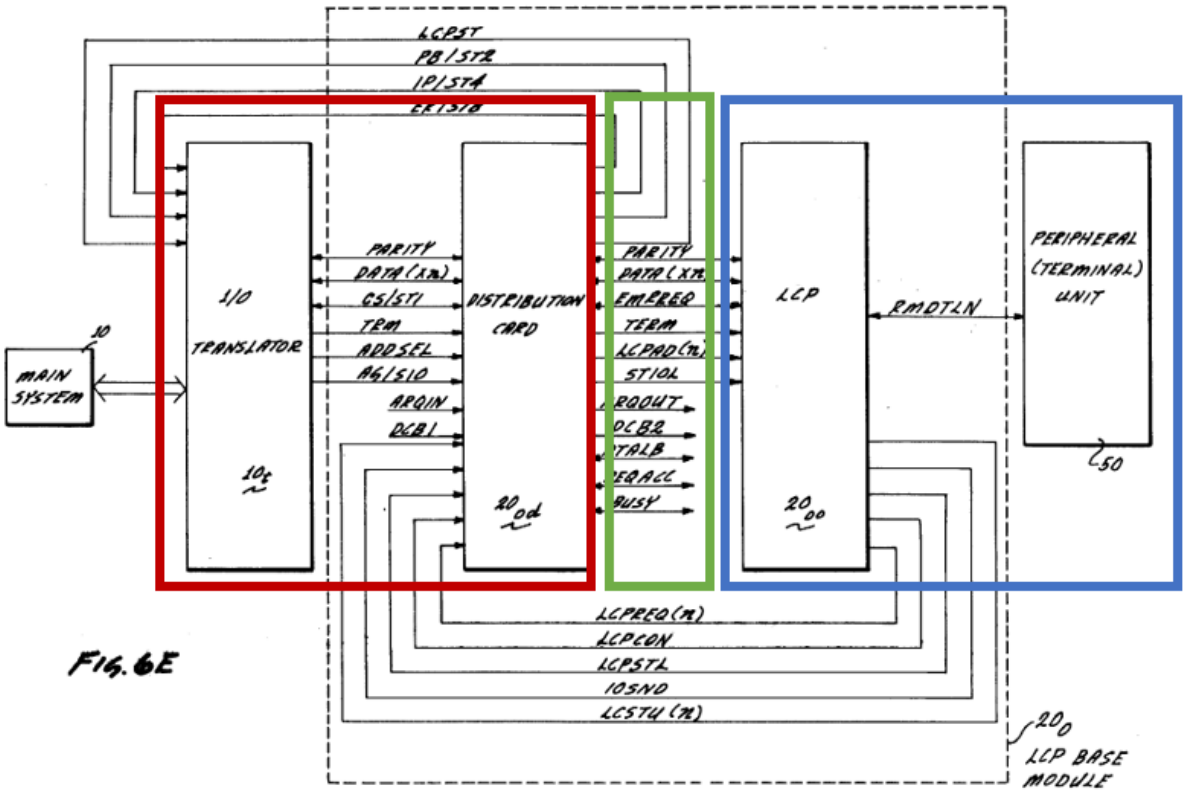


FIG. 6E

*Id.*, Fig. 6E.

Cook further discloses that the DCU, in connection with the IOT, acts as a switch by sending and receiving messages with each of the LCPs using a specific address. *Id.*, 31:63-32:47; EX1003, ¶¶173-175. Cook also discloses using a "poll test" to establish a connection between the DCU on the LCBM and the LCPs. The poll test identifies errors or indicates the port is busy. EX1010, 23:43-24:27.

### b) Motivation to Combine Cook and Lewis

A POSITA would have been motivated to combine the backplane testing described in Cook with the loopback testing described in Lewis as depicted below.

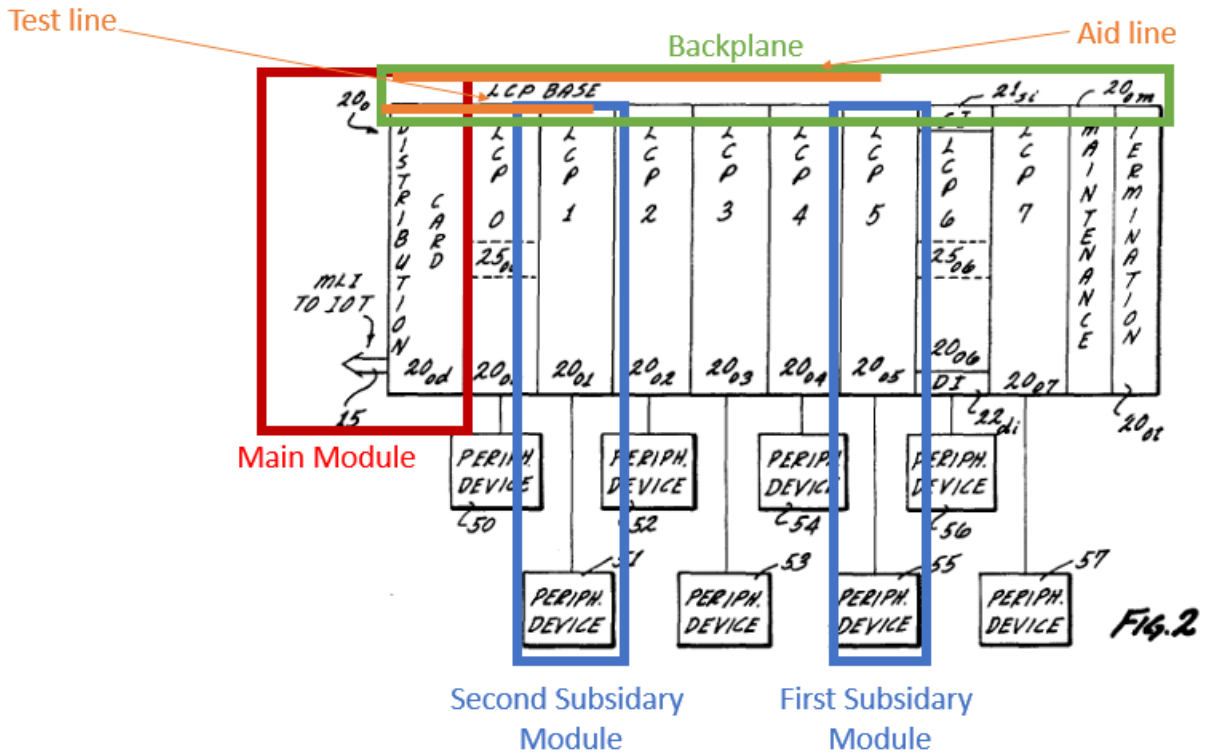


EX1010, Fig. 2.

The main module would set up an aid line with the first subsidiary module and a test line with the second subsidiary module, as disclosed in Lewis. The backplane modules in Cook would then perform the loopback test described in Lewis set forth above, where the main module routes the test packet between the first and second subsidiary modules over the test and aid lines. EX1009, 4:42-54. This combination would have been obvious to a POSITA for multiple reasons.

**First**, both references are generally directed to testing connections within a system with multiple components. Cook recites a DCU coupled to the IOT that directs traffic to the LCPs plugged into a backplane as the DCU. EX1010, 28:62-29:7. Lewis recites a similar set up where the control processor/circuit switch direct testing of peripheral controllers. EX1009, 3:47-60. A POSITA would have been motivated to combine the testing protocol in Lewis with the structure disclosed in Cook because a POSITA would have understood the benefits of a loopback test in the context of a backplane with a DCU. EX1003, ¶174.

**Second**, Cook makes clear that there are many different types of peripheral devices that can be added to the LCPs, including "card readers, magnetic tape units, card punches, printers, disk files, supervisory terminals, and so on," so a POSITA would have understood that the testing configurations must be adaptable and flexible. EX1010, 1:47-49. A POSITA therefore would have been motivated to look at other testing configurations, like the one disclosed in Lewis for the creation of a loopback test. It would have been obvious to a POSITA that testing in a backplane could benefit from such a loopback test because there are times when the different boards in a backplane need to communicate with each other. EX1003, ¶175. A POSITA would have recognized that there are times when data needs to be transferred to and from different boards on the backplane, e.g., from a storage unit to a printer. As Cook explained, moreover, it was desirable to take the load off of

the processing unit and main memory, which is accomplished by the DCU and IOT handling messages between peripherals. EX1010, 1:22-31. A POSITA therefore would have been motivated to apply the loopback testing between two peripherals in Lewis to the peripherals in Cook to test the connection between two peripherals connected via the backplane in Cook. EX1003, ¶175.

**Third**, a POSITA would have been motivated to test the backplane lines while they were idle as disclosed in Lewis. EX1009, 2:19-20. As Cook explains, connections may not be made to LCPs when they are busy. EX1010, 23:61-24:27. A POSITA would understand that the best time to disable those parts and perform the test is when the lines are otherwise idle because that would avoid disrupting traffic when the lines were in use. EX1003, ¶176.

**Reasonable expectation of success**. A POSITA would have had a reasonable expectation of success to implement the testing in Lewis to the backplane structure from Cook. Cook happens to disclose a "poll test," but, as Ke acknowledged, there were multiple possible techniques for testing backplanes. EX1008, 1:30-2:18. A POSITA would therefore have a reasonable expectation of success to apply a different type of testing technique. EX1003, ¶177. Furthermore, Cook explains that the DCU and IOT control the communications and addressing to the individual LCPs. EX1010, 31:63-32:41. A POSITA would have therefore understood that the loopback testing between specific peripherals in Lewis could be employed in Cook

by using the DCU to control testing between specific LCPs, including two LCPs within a single LCPBM in which case data need not even go to the IOT. EX1003, ¶178.

### 2. Analysis of Ground 3

#### a) 1[pre]: In an electronic system that includes a main module and at least first and second subsidiary modules, each of said at least first and second subsidiary modules connected to the main module by one or more lines for carrying data, at least some of which lines are sometimes idle, the main module including a switch having ports connected to the lines, a method for self-testing the system, comprising:

To the extent the preamble is limiting, Cook-Lewis render obvious 1[pre]. Cook discloses a digital computing system (***electronic system***) with a DCU (connected to an IOT) (main module) and up to eight LCPs (subsidiary modules) connected by lines in a backplane in the LCBM. EX1010, Fig.2; EX1003, ¶180.

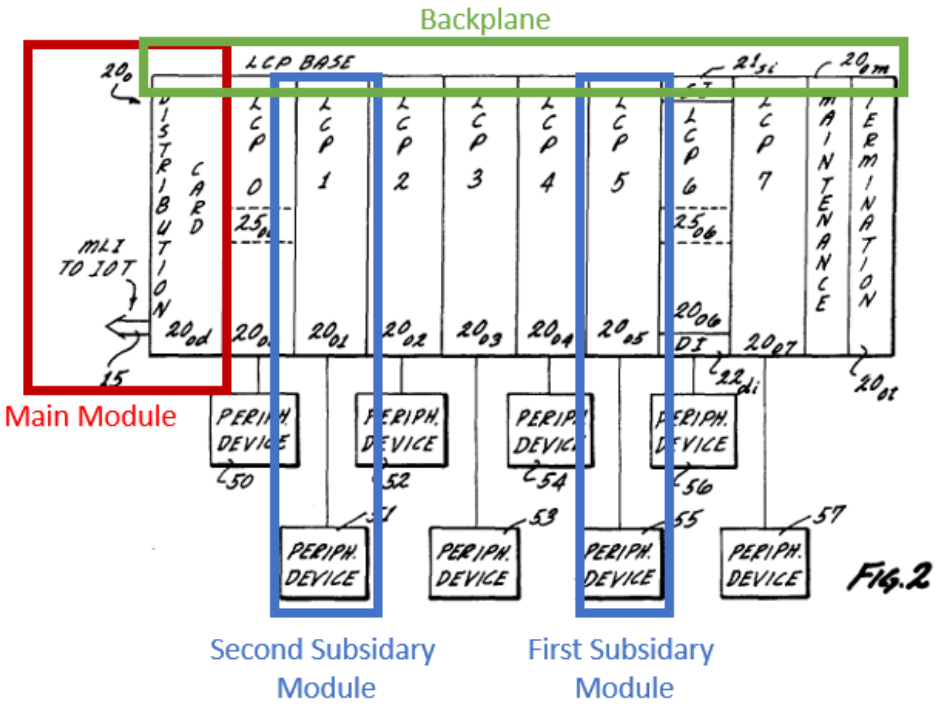


EX1010, Fig. 2.

This same basic structure from Cook is mirrored in Lewis, and it would have been obvious to combine Cook with Lewis as set forth above. EX1003, ¶¶181-82. Like Cook, Lewis describes a circuit switch 10—which communicates with a control processor 7 and message switch 9—(main module) that can set up a communication loop for testing the connection with peripherals 12A (second subsidiary module) and 13 (first subsidiary module). EX1009, 3:47-60.

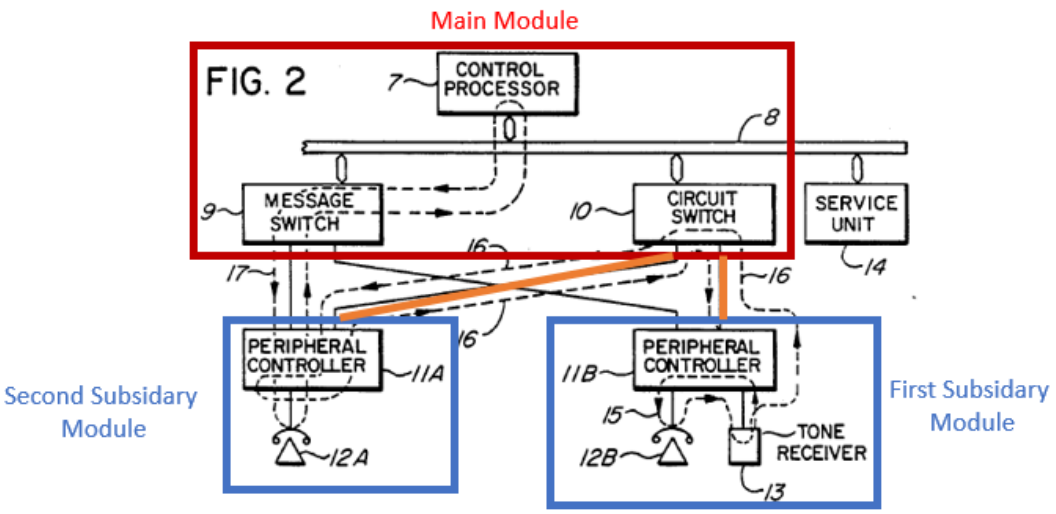


EX1009, Fig. 2.

Cook recognizes that there are times when the backplane is "inactive" or idle and discloses that the inactivity may be detected by the system. EX1010, 52:51-61. Alternatively, it would have been obvious to a POSITA that the lines in the backplane would sometimes be idle or not in use. EX1003, ¶183. It also would have been obvious to a POSITA to combine Cook with Lewis for the reasons disclosed above. *Id*. Lewis makes clear that there are times when the lines or connections are idle and that testing should be done when they are not in use. EX1009, 2:19-20.

Cook discloses that the main module (DCU and IOT) acts as the switch by driving the poll test and also addressing the data to the different LCPs. EX1010, 31:63-32:41; EX1003, ¶184. Cook discloses that the LCPs and DCU are connected to the backplane and further characterizes that connection as a "port." EX1010, 28:62-29:7. A POSITA would have understood that the connections with the

backplane act as the interconnect or port between the card and the backplane. EX1003, ¶184.

Cook further discloses the DCU performing a "poll test" on the LCPs. EX1010, 23:42-24:27.

**b) 1[a]: selecting a first idle line among idle lines connecting the first subsidiary module to a first port of the switch on the main module to serve as an aid line;**

Cook-Lewis discloses 1[a]. Lewis discloses setting up a loopback test when the lines are idle. EX1009, 2:19-20. When the lines are idle, the system sets up a loopback circuit by choosing an aid line between the first subsidiary module and the circuit switch in the main module. *Id.*, 4:23-41.

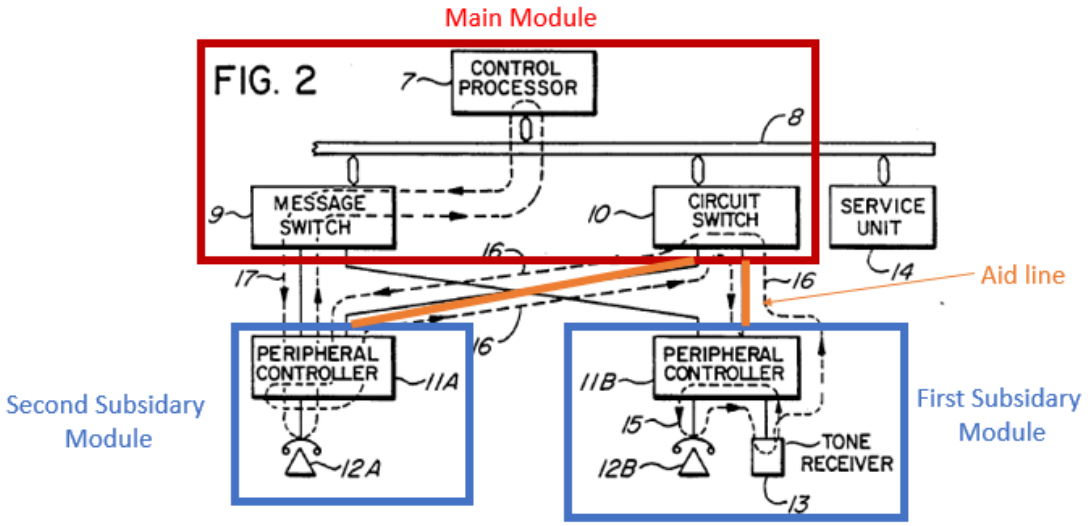


EX1009, Fig. 2.

This same set up is mirrored by the structure in Cook as depicted below.

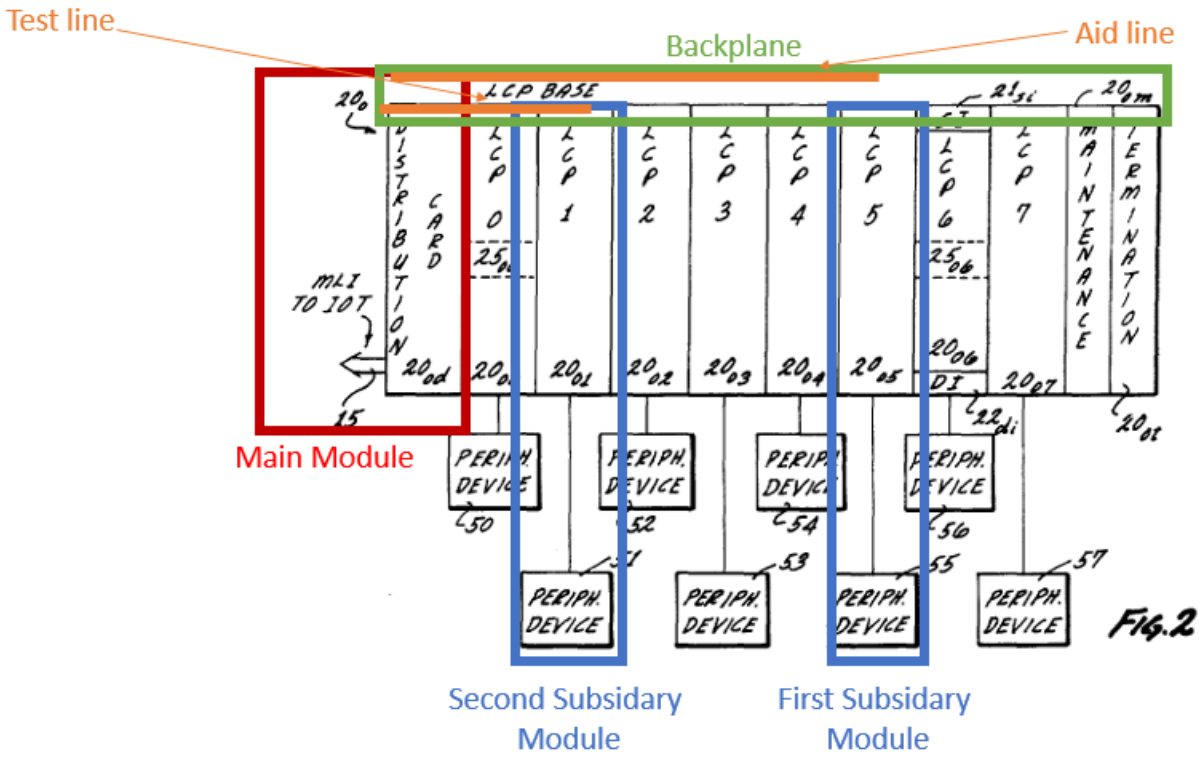


EX1010, Fig. 2.

A POSITA would have understood that the first subsidiary module is connected to the circuit switch via a port, which is how connections between the switch and the peripherals would have been made. EX1003, ¶¶186-187. Alternatively, it would have been obvious to a POSITA that the peripherals could have been connected to the switch via a port. *Id.*

**c) 1[b]: instructing the first subsidiary module to loop back traffic reaching the first subsidiary module via the aid line;**

Cook-Lewis discloses 1[b]. Lewis discloses that the control processor of the main module sets up a communication loop between the first and second subsidiary

modules. EX1009, 4:23-41. A POSITA would have understood that this requires instructing the first subsidiary module to loop back traffic it receives back to the circuit switch in the main module. EX1003, ¶189. Indeed, a POSITA would have understood that the first subsidiary module must be instructed to loopback the traffic or else the traffic would not be returned as described in Lewis: "the control processor 7 can send messages through bus 8 via the message switch 9 to the peripheral controller 11A, and to circuit switch 10 to set up a circuit switch loop 16 from a peripheral telephone 12A interface, through peripheral controller 11A, circuit switch 10, peripheral controller 11B to the tone receiver 13 interface." EX1009, 4:42-49.

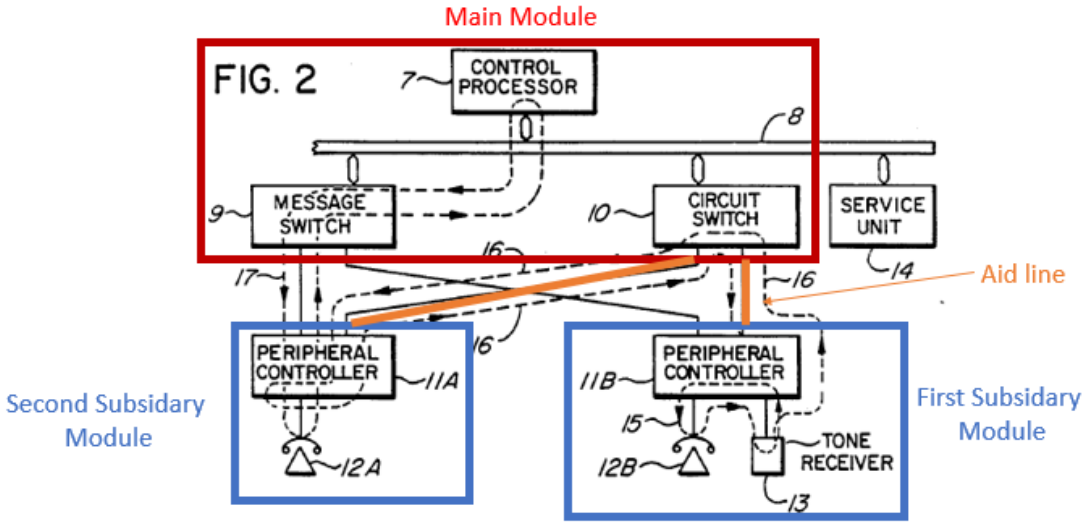


*Id.*, Fig. 2.

Alternatively, it would have been obvious to a POSITA that the instruction to loopback must have occurred because Lewis discloses that traffic is looped back from the first subsidiary module to the main module. *Id.*

**d) 1[c]: selecting for testing a second idle line among the idle lines connecting the second subsidiary module to a second port of the switch on the main module;**

Cook-Lewis discloses 1[c]. When the system sets up the loopback as described in 1[a], the system also selects a line between the second subsidiary module and the circuit switch of the main module for testing ("test line"). EX1009, 4:23-41.

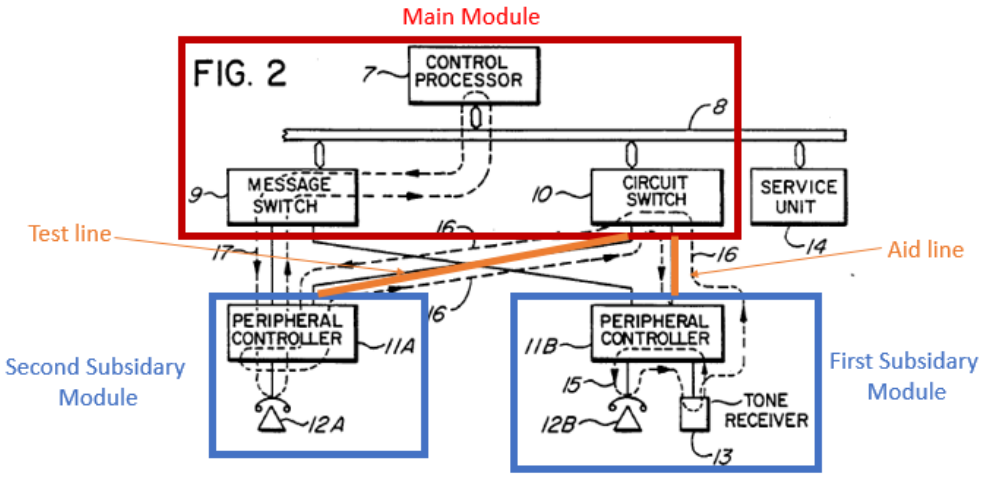


*Id.*, Fig. 2.

For the same reasons in 1[a], a POSITA would have understood or found it obvious that the second subsidiary module is connected via a port to the circuit switch. EX1003, ¶191-192.

**e) 1[d]: configuring the switch to link the first and second ports;**

Cook-Lewis discloses 1[d]. A POSITA would have understood that, when the loopback is set up as described in 1[a] and 1[c], the circuit switch is configured to link the first and second ports to form the loopback circuit. *Id.*, ¶194. For

example, a POSITA would have understood that the switch must be configured to link the ports that would set up the loop as described in Lewis: "the control processor 7 can send messages through bus 8 via the message switch 9 to the peripheral controller 11A, and to circuit switch 10 to set up a circuit switch loop 16 from a peripheral telephone 12A interface, through peripheral controller 11A, circuit switch 10, peripheral controller 11B to the tone receiver 13 interface." EX1009, 4:42-49.

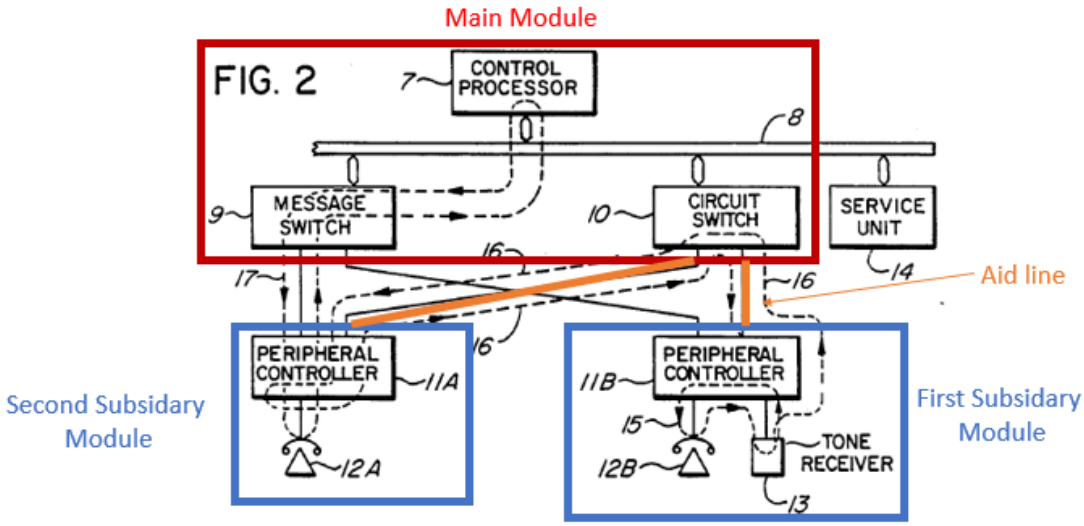


*Id.*, Fig. 2.

Alternatively, it would have been obvious to a POSITA that the circuit switch could link the first and second ports to form that circuit. *Id.*

**f) 1[e]: transmitting test traffic over the second idle line from the second subsidiary module to the main module, wherein the test traffic is conveyed via the**

**switch to the aid line connecting to the first subsidiary module; and**

Cook-Lewis discloses 1[e]. Lewis discloses sending a test message over the test line from the second subsidiary module to the circuit switch and that the circuit switch then sends the test message to the first subsidiary module over the aid line. EX1009, 4:23-41; EX1003, ¶196.

**g) 1[f]: reporting that a failure has occurred if the test traffic does not return to the second subsidiary module within a predetermined period of time.**

Cook-Lewis discloses 1[f]. Lewis discloses that the main module acknowledges receiving the return signal if the test message returns successfully. EX1009, 14:3-11. A POSITA would have understood that, if the main module did not receive the test message from the second subsidiary module within a predetermined period of time, it would have reported the failure by logging the error or notifying the user. EX1003, ¶198. This is the normal way errors are handled when test packets are sent. For example, since the 1980s, every POSITA would be familiar with the ping command, which sends out a test packet and will wait to receive a response or time out if a response is not received. *Id.*, ¶198; EX1012, 52-58 (describing timeouts in ICMP).

At minimum, it would have been obvious to a POSITA for an error to be reported if a response to a test packet is not received within a set time period for the same reasons. EX1003, ¶198.

**h) Claim 2: A method according to claim 1, wherein instructing the first subsidiary module comprises configuring the first subsidiary module to loop back the traffic to the main module substantially without processing data comprised in the test traffic.**

Cook-Lewis discloses claim 2 for the same reasons as 1[b]. Lewis discloses that the message just passes through the loop and back to the main module. EX1009, 4:34-39. A POSITA would have understood that the this means it went through the first subsidiary module without substantial processing of the test traffic since it is simply "passed through the loop." *Id.*; EX1003, ¶200.

**i) Claim 3: A method according to claim 2, wherein the first and second subsidiary modules are configured to transmit and receive data in different, respective first and second formats, and wherein the test traffic transmitted from the second subsidiary module and looped back by the first subsidiary module is in the second format.**

Cook-Lewis discloses claim 3. EX1003, ¶202; *see* Claim 2. Cook discloses a number of different message formats, including in Figures 5A, 5B, and 5D. EX1010, 21:33-52, 22:63-24:27. A POSITA would have understood that the message format for the loopback test traffic disclosed in Lewis would be in a different format (second format) from those described in Cook. EX1003, ¶203. In sum, Ke explicitly discloses that the first and second subsidiary modules are configured to transmit and receive data in different formats, including a second format for test traffic. Alternatively, it would have been obvious to a POSITA that

the subsidiary modules would need to send and receive data in multiple formats because different messages passed between the modules in Ke may require different information and would have been organized differently in a different format. *Id.*, ¶204.

**j) Claim 4: A method according to claim 1, further comprising: selecting one or more further idle lines for testing among the idle lines in the system, wherein the further idle lines connect to further ports of the switch on the main module; and repeating the configuring the switch, transmitting the test traffic, and reporting that the failure has occurred with respect to the further idle lines until all the idle lines have been tested.**

Cook-Lewis discloses claim 4. As explained in 1[a] and 1[c], Lewis discloses selecting multiple idle lines that connect to ports on the circuit switch in the main module. Lewis further explains that the same process can be used for loops of any length. A POSITA would have understood that additional idle lines could be added to the same loop. *Id.*, ¶206. It would have been obvious to a POSITA that the same process for choosing idle lines could be repeated after the test is done and that the test should be repeated until all the idle lines have been tested. *Id*. Indeed, a POSITA would have known how to create a loop in the testing logic to simply run the test multiple times until all idle lines are tested. A POSITA would have been motivated to do so to make sure all those lines are still working. *Id.*

**k) Claim 5: A method according to claim 1, wherein the main module and said at least first and second**

**subsidiary modules comprise cards, which are plugged into a backplane, and wherein the lines comprise traces on the backplane.**

Cook-Lewis discloses claim 5. As detailed for 1[pre], Cook discloses a digital computing system (***electronic system***) with a DCU (connected to an IOT) and up to eight LCPs connected by a backplane in an LCBM, with backplane lines (traces) thereon. EX1010, 28:62-29:7.

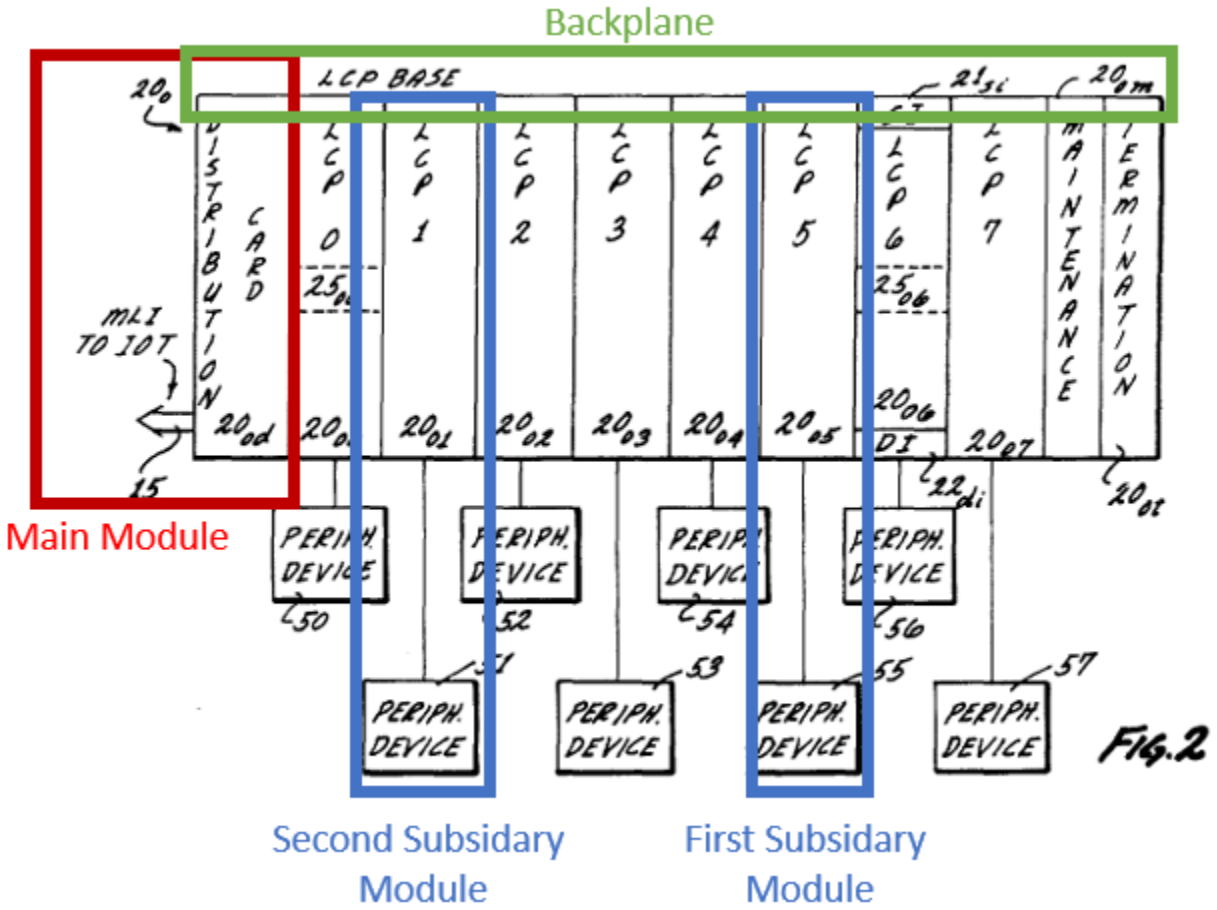


EX1010, Fig.2; EX1003, ¶208.

A POSITA would have understood that Cook discloses that the modules are plugged into the backplane because that is how cards (like the DCU and LCPs) are

connected to a backplane. EX1003, ¶209. At minimum, it would have been obvious to a POSITA that the DCU and LCPs plug into the backplane. *Id.*

**l) Claim 6: A method according to claim 1, wherein the switch is configured to connect the lines to a network communication trunk, and wherein the traffic comprises communication traffic.**

Cook-Lewis discloses claim 6. Although Cook does not explicitly discuss the types of electrical systems to which it may be associated, a POSITA would have understood that one such electrical system that commonly used backplanes would have been a network switch or other type of network device. *Id.*, ¶211. A POSITA would have further understood one of the cards inserted into the backplane, like the main module, would have a connection to the broader internet and other modules could connect to the internet through that network trunk. *Id.*, ¶211.

**m) Claim 7: A method according to claim 6, wherein transmitting the test traffic comprises testing the second idle line while continuing to use the lines that are not idle for carrying the data to the network communication trunk.**

Cook-Lewis discloses claim 7. Lewis discloses only sending the test messages after the link is determined to be idle. EX1009, 14:30-34, 2:19-20. A POSITA would have understood that the test is therefore conducted on idle lines while other lines that are not idle continued to be used for carrying normal data. EX1003, ¶213.

**n) 8[pre]: In an electronic system that includes a main module and multiple subsidiary modules, each of said multiple subsidiary modules being connected to the main module by one or more lines for carrying data, a method for self-testing the system, comprising:**

Cook-Lewis discloses 8[pre] for the same reasons as 1[pre]. *Id.*, ¶215.

**o) 8[a]: selecting first and second subsidiary modules of different types for testing among the multiple subsidiary modules, the first and second subsidiary modules being configured to transmit and receive the data in different, respective first and second formats;**

Cook-Lewis discloses 8[a] for the same reasons as 1[a], 1[c], and claim 3. EX1003, ¶216. Cook-Lewis further discloses the first and second subsidiary modules are different types because Cook discloses that each of the peripherals attached to the LCPs could be different types. EX1010, 1:47-49. Lewis likewise discloses different types of peripherals. EX1009, 4:23-41, Fig. 2. A POSITA therefore would have understood that the first and second modules could be different types. EX1003, ¶216.

**p) 8[b]: instructing the first subsidiary module to loop back traffic reaching the first subsidiary module from the main module;**

Cook-Lewis discloses 8[b] for the same reasons as 1[b]. *Id.*, ¶217.

**q) 8[c]: configuring the main module to connect the first and second subsidiary modules, so that the traffic transmitted by the second subsidiary module is conveyed to the first subsidiary module via the main module and is then looped back via the main module to the second subsidiary module; and**

Cook-Lewis discloses 8[c] for the same reasons as 1[c]. *Id.*, ¶218.

**r) 8[d]: testing the system by causing the second subsidiary module to transmit test traffic in the second format to the main module, and assessing whether the test traffic is returned intact from the first module.**

Cook-Lewis discloses 8[d] for the same reasons as 1[f] and claim 3. *Id.*, ¶219. Lewis discloses that the main module acknowledges receiving the return signal if the test message returns successfully. EX1009, 14:3-25. A POSITA would understand that the main module would make sure that the test message returned intact before it acknowledged a receipt because the test would not be successful if the message did not return intact or did not return. EX1003, ¶219.

**s) Claim 9: A method according to claim 8, wherein instructing the first subsidiary module comprises configuring the first subsidiary module to loop back the traffic to the main module substantially without processing data comprised in the test traffic.**

Cook-Lewis discloses claim 9 for the same reasons as claim 2. *Id.*, ¶221.

**t) Claim 10: A method according to claim 8, wherein the main module and subsidiary modules comprise cards, which are plugged into a backplane, and wherein the lines comprise traces on the backplane.**

Cook-Lewis discloses claim 10 for the same reasons as claim 5. *Id.*, ¶222.

**u) Claim 11: A method according to claim 8, wherein the main module comprises a switch, which is coupled to connect the lines to a network communication trunk, and wherein configuring the main module comprises configuring the switch to connect at least**

**one of the lines of the first subsidiary module to at least one of the lines of the second subsidiary module.**

Cook-Lewis discloses claim 11 for the same reasons as claim 6 and 1[d]. *Id.*, ¶223. A POSITA would understand that, by linking the first and second ports, the switch is connecting lines of the first and second subsidiary modules. *Id.*, ¶223. At minimum, it would have been obvious to a POSITA that the switch could connect lines of the first and second subsidiary modules so they can send the test traffic to each other. *Id.*

**v) Claim 12: A method according to claim 11, wherein testing the system comprises testing one or more of the lines of the second subsidiary module while continuing to use at least some of the lines that are not under test for carrying the data from the subsidiary modules to the network communication trunk.**

Cook-Lewis discloses claim 12 for the same reasons as claim 7. *Id.*, ¶225.

**w) Claim 13: A method according to claim 8, wherein the traffic comprises communication traffic, and wherein the first and second formats are determined respectively by different first and second communication protocols.**

Cook-Lewis discloses claim 13 for the same reasons as claim 3. *Id.*, ¶226. It would have been obvious to a POSITA that the test traffic in the second format could have used a different protocol than normal traffic, which would result in different protocols because the test traffic is handled by the modules differently than normal

traffic, and therefore a POSITA would have been motivated to use a different protocol so the module knows how to handle the test traffic. *Id.*, ¶226.

**x) Claim 14: A method according to claim 13, wherein one of the first and second protocols is a time domain multiplexing (TDM) protocol, while the other of the first and second protocols is a packet data protocol.**

Cook-Lewis discloses claim 14. *Id.*, ¶228. It would have been obvious to a POSITA that multiple different protocols could be used, including TDM protocols and packet data protocols. A POSITA would have been motivated to try these different protocols to see what is more efficient. *Id.*, ¶228.

**y) 15[pre]: Modular electronic apparatus, comprising:**

To the extent the preamble is limiting, Cook and Lewis render obvious 15[pre]. Cook discloses an electronic apparatus, comprising a backplane into which multiple LCPs may be plugged. EX1008, 2:55-56, Fig. 1. A POSITA would have understood that the cards can be inserted and removed in a modular fashion, making the disclosure in Cook a modular electronic apparatus. EX1003, ¶230. Indeed, the title of Cook is "Modular block unit for input-output subsystem." EX1010, [54].

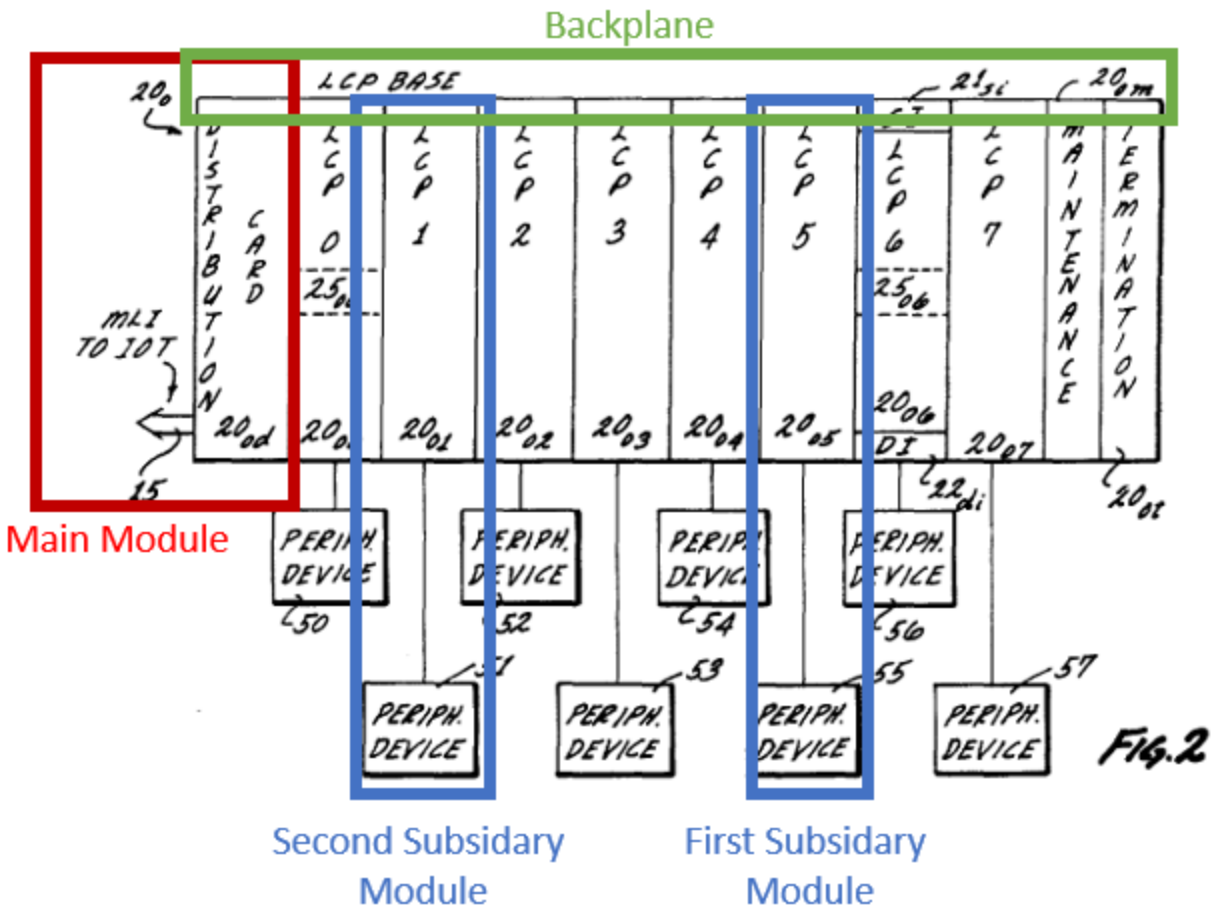


FIG. 2

EX1010, Fig. 2; EX1003, ¶230.

**z) 15[a]: a backplane, which comprises traces for carrying data between modules that are plugged into the backplane;**

Cook-Lewis discloses 15[a] for the same reasons as claim 5. *Id.*, ¶233.

**aa) 15[b]: a main module, plugged into the backplane, the main module comprising a switch having ports for connection to the traces of the backplane;**

Cook-Lewis discloses 15[b] for the same reasons as 1[pre] and claim 5. *Id.*, ¶234.

**bb) 15[c]: at least first and second subsidiary modules, plugged into the backplane so as to be connected to the main module by the traces, at least some of which traces are sometimes idle; and**

Cook-Lewis discloses 15[c] for the same reasons as 1[pre] and claim 5. *Id.*, ¶235.

**cc) 15[d]: a system control processor, which is operative to select a first idle trace among idle traces connecting the first subsidiary module to a first port of the switch on the main module to serve as an aid trace,**

Cook-Lewis discloses 15[d] for the same reasons as 1[a]. *Id.*, ¶236. A POSITA would have understood that the DCU has a processor so that it can process data sent to it and route the data to the correct LCP or to the IOT. *Id.*, ¶236.

**dd) 15[e]: to instruct the first subsidiary module to loop back traffic reaching the first subsidiary module via the aid trace,**

Cook-Lewis discloses 15[e] for the same reasons as 1[b]. *Id.*, ¶238.

**ee) 15[f]: to select for testing a second idle trace among the idle traces connecting the second subsidiary module to a second port of the switch on the main module, and**

Cook-Lewis discloses 15[f] for the same reasons as 1[c]. *Id.*, ¶239.

**ff) 15[g]: to configure the switch to link the first and second ports,**

Cook-Lewis discloses 15[g] for the same reasons as 1[d]. *Id.*, ¶240.

**gg) 15[h]: the system control processor being further operative to cause test traffic to be transmitted over**

**the second idle trace from the second subsidiary module to the main module, wherein the test traffic is conveyed via the switch to the aid trace connecting to the first subsidiary module, and**

Cook-Lewis discloses 15[h] for the same reasons as 1[e]. *Id.*, ¶241.

**hh) 15[i]: to report that a failure has occurred if the test traffic does not return to the second subsidiary module within a predetermined period of time.**

Cook-Lewis discloses 15[i] for the same reasons as 1[f]. *Id.*, ¶242.

The remaining claims are disclosed for the reasons already set forth above, as detailed in the table below:

| Limitation | Reason Disclosed |
|---|---|
| 16 | 2 (EX1003, ¶243) |
| 17 | 3 (EX1003, ¶244) |
| 18 | 4 (EX1003, ¶245) |
| 19 | 6 (EX1003, ¶246) |
| 20 | 7 (EX1003, ¶247) |
| 21[pre] | 15[pre] (EX1003, ¶248) |
| 21[a] | 15[a] (EX1003, ¶249) |
| 21[b] | 15[b] (EX1003, ¶250) |
| 21[c] | 15[c] (EX1003, ¶251) |
| 21[d] | 15[d]-15[i] (EX1003, ¶252) |

| Limitation | Reason Disclosed |
|---|---|
| 22 | 2 (EX1003, ¶253) |
| 23 | 11 (EX1003, ¶254) |
| 24 | 12 (EX1003, ¶255) |
| 25 | 13 (EX1003, ¶256) |
| 26 | 14 (EX1003, ¶257) |

### D. Ground 4: Cook in View of Lewis and Sarkinen Renders Obvious Claims 3, 6, 8, 13, 14, 17, 21, 25, and 26

To the extent the additional limitations of claims 3, 6, 8, 13, 14, 17, 21, 25, and 26 are not rendered obvious by Cook and Lewis, it would have been obvious to combine Cook and Lewis with Sarkinen.

#### 1. Claim 6

Although Cook is not specific about the type of backplane devices it can be used on, Sarkinen makes clear that one such backplane device is a network switch or router with line cards and fabric cards (subsidiary modules) controlled by a fabric interface (main module), all of which are plugged into a backplane or midplane 314. It therefore would have been obvious to combine Cook and Lewis with Sarkinen for the same reasons it would have been obvious to combine Ke and Lewis with Sarkinen disclosed above. *Id.*, ¶259.

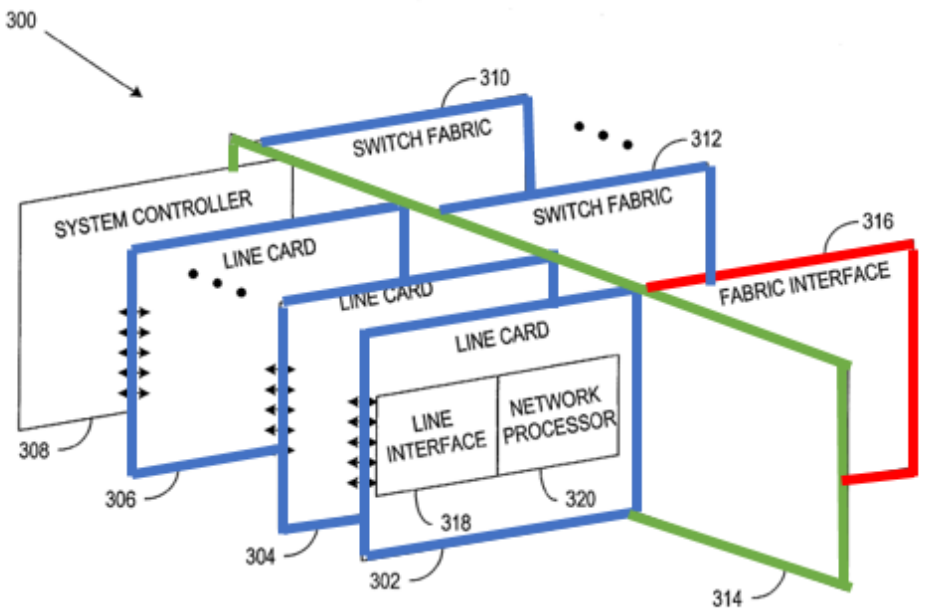
300
310
SWITCH FABRIC
312
SWITCH FABRIC
SYSTEM CONTROLLER
LINE CARD
LINE CARD
LINE CARD
316
FABRIC INTERFACE
LINE INTERFACE
NETWORK PROCESSOR
308
306
304
302
318
320
314

*FIG. 3*

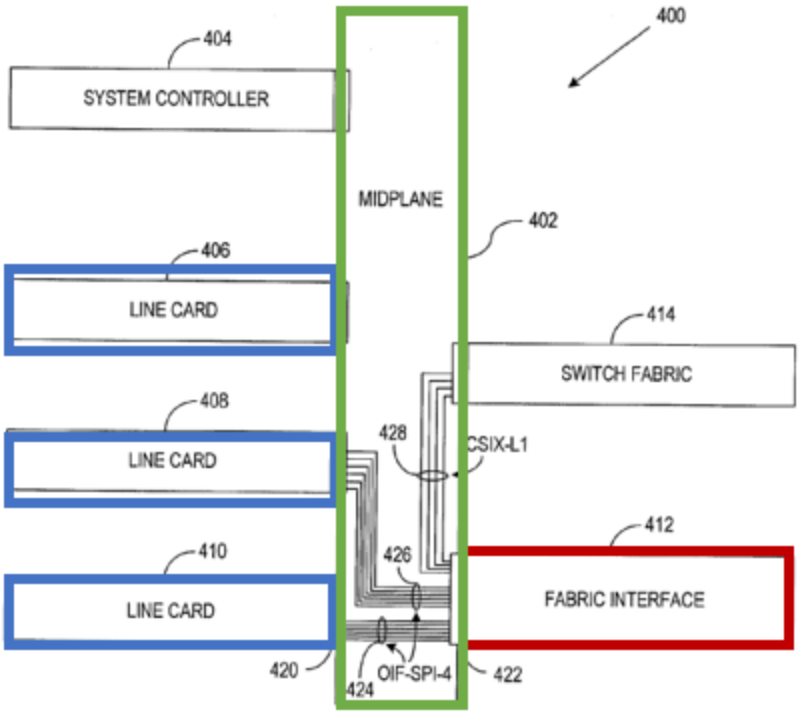
400
404
SYSTEM CONTROLLER
MIDPLANE
402
406
LINE CARD
414
SWITCH FABRIC
408
LINE CARD
428
CSIX-L1
412
410
426
LINE CARD
FABRIC INTERFACE
420
424
OIF-SPI-4
422

*FIG. 4*

Although Ke is not specific about the type of backplane devices it can be used on, Sarkinen makes clear that one such backplane device is a network switch or router with line cards and fabric cards (subsidiary modules) controlled by a fabric interface (main module), all of which are plugged into a backplane or midplane 314. Sarkinen further makes clear that the line cards include a network line interface, which plugs into a network link or trunk to a broader network. EX1011, ¶13. A POSITA would have understood that, when implemented as a switch or router as disclosed in Sarkinen, the traffic transmitted over the line cards and fabric cards is communication traffic which is routed over the network to which the switch/router is connected. EX1003, ¶¶259-260.

It would have been obvious to a POSITA that Sarkinen discloses one type of backplane device to which the testing disclosed in Ke and Lewis could apply. *Id.*, ¶261. A POSITA would have been motiviated to apply the testing from Ke and Lewis to ensure that the line cards traces were functioning properly for the same reasons described above. *Id.* Indeed, a POSITA would have recognized that the path between two line cards would be a loop that would commonly be used and should be tested periodically when the trace is idle. A POSITA would have understood that the fabric interface would act as a switch to help address traffic between the two line cards and that the fabric interface would operate in between the

two line cards and could set up the paths between the line cards as shown in Figure 4.

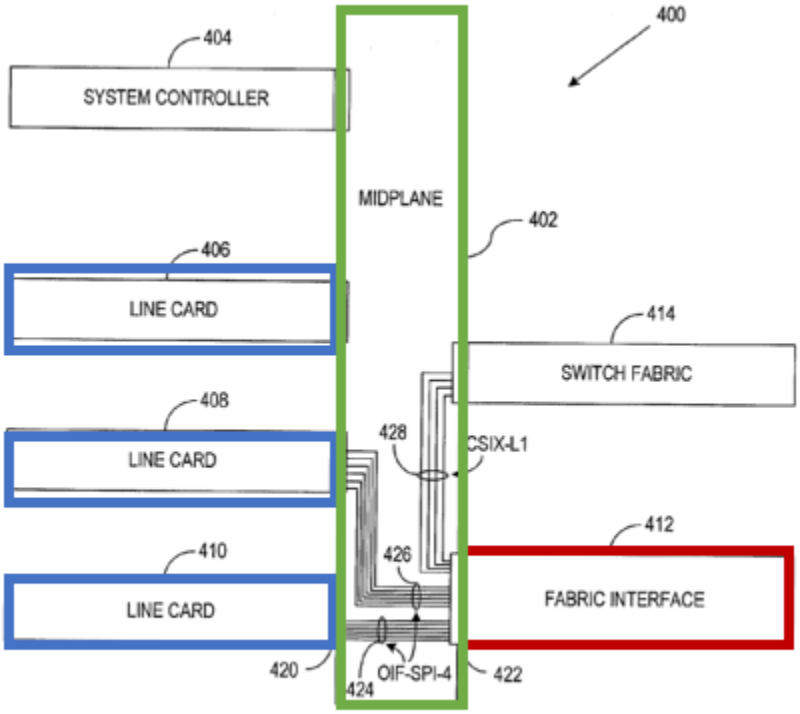


*FIG. 4*

### 2. Claims 3, 8, 13, 14, 17, 21, 25, and 26

Claims 3, 8, 13, 14, 17, 21, 25, and 26 further recite that the subsidiary modules transmit and receive data in at least two different formats. To the extent Cook-Lewis does not render obvious this limitation, it would have been obvious to combine Cook-Lewis with Sarkinen because Sarkinen is an example of a network switch with the backplane architecture disclosed in Cook as set forth above. Sarkinen makes clear that the switch may support multiple protocols. EX1011, ¶58. It would have been obvious to a POSITA that each line card would support a

different protocol with a different format for the reasons set forth above in connection with Ke. EX1003, ¶264.

For claims 13 and 25, it would have been obvious to a POSITA that the different format of data traffic received by the line cards are associated with different line cards, and Sarkinen explicitly discloses that the switch supports different protocols. EX1011, ¶58; EX1003, ¶265.

For claims 14 and 26, it would have been obvious to a POSITA that the different protocols could include both TDM and packet data protocols. EX1003, ¶266.

## IX. PTAB DISCRETION SHOULD NOT PRECLUDE INSTITUTION

### A. Discretionary denial under the *Fintiv* factors is not appropriate

#### 1. Factor 1: Institution will increase the likelihood of stay

The District Court has made clear in prior cases that a motion to stay prior to institution of an IPR would be premature, so Petitioners have not yet requested a stay. The Board has repeatedly stated that it will not speculate on how a district court will treat a motion to stay. *See, e.g.*, *VMware Inc. v. Intellectual Ventures II LLC*, IPR2020-00859, Paper No. 13, at 12 (informative) ("We agree with Petitioner. In the absence of any evidence specific to this case, we decline to speculate about the presiding judge's inclinations."); *Apple Inc. v. Fintiv, Inc.*, IPR2020-00019, Paper 15 at 12 (PTAB May 13, 2020) (informative) ("We decline to infer, based on

actions taken in different cases with different facts, how the District Court would rule should a stay be requested by the parties in the parallel case here."). As such, this factor is, at worst, neutral.

**2. Factor 2: District Court schedule**

Cisco's *Markman* hearing is not until February 15, 2023. EX1014. No date has been set for trial. A Final Written Decision ("FWD") would be expected in July 2024. The Dell litigation does not have a scheduling order yet. The parties worked expeditiously to prepare and file this petition approximately five months after Cisco received Patent Owner's infringement contentions on August 3, 2022.

Furthermore, notwithstanding a yet-to-be-issued trial date for the Cisco litigation, the current average time to trial for the W.D. Texas district court hearing the co-pending litigation is over two years. EX1015 (showing W.D. Texas median time to trial of 28.3 months); *In re Apple Inc.*, 979 F.3d 1332, 1350 (Fed. Cir. 2020). Petitioners note that "a court's general ability to set a fast-paced schedule is not particularly relevant…where, like here, the forum itself has not historically resolved cases so quickly." *Id.* at 1344. The current average time to trial for the Delaware district court (for the Dell litigation) is much longer. EX1016 (median time to trial of 39 months).

Accordingly, this factor weighs against discretionary denial. *See Sand Revolution II, LLC v. Continental Intermodal Grp.*, IPR2019-01393, Paper 24 (June

16, 2020) (granting institution on rehearing based on finding that uncertainty over district court's trial date weighed against discretionary denial).

#### 3. Factor 3: Petitioners' investment in IPR outweighs forced investment in litigation to date

The co-pending litigations are in their early stages, and the investment in them has been minimal. The *Markman* hearing is not for another month in the Cisco litigation and discovery has not begun. EX1014; *see PEAG LLC v. Varta Microbattery GMBH*, IPR2020-01214, Paper 8, 17 (Jan. 6, 2021) (since no claim construction hearing had yet been held and discovery was not completed, the little investment in the parallel proceeding weighed against discretionary denial). The Dell litigation does not yet have a scheduling order.

#### 4. Factor 4: The Petition raises unique issues

Preliminary invalidity contentions in the Cisco litigation were served on Patent Owner on September 28, 2022. Instituting a proceeding will allow the Board to address the asserted prior art, and the issues will be narrowed in the co-pending litigations due to the estoppel provisions of 35 U.S.C. §315(e)(2).

Moreover, there will be no overlap of prior art issues. If the Board institutes trial, Petitioners will cease asserting in the co-pending litigations the combination of references on which trial is instituted for the claims on which trial is instituted, to the extent Petitioners even assert the same combination in the litigations against them. This factor weighs against discretionary denial. *See Verizon v. Huawei*,

IPR2020-01079, Paper 10, 38 (Jan. 14, 2021) (finding a similar stipulation "mitigates the concern about overlapping issues" and weighs "against discretionary denial of the Petition.").

#### 5. Factor 5: Whether the Petitioners and Defendants in the parallel litigation are the same party

Petitioners are defendants in co-pending litigations. While the *Fintiv* case indicates that a difference between the district court defendant and the petitioner may weigh against discretionary denial, nothing within the *Fintiv* case suggests that the same party between the proceedings weighs in favor of discretionary denial. *See HP Inc. v. Slingshot Printing LLC*, IPR2020-01084, Paper 13, 9 (Jan. 14, 2021) (having the "same parties as parallel proceeding" makes factor 5 "neutral"). Accordingly, this factor is neutral and should not be a basis for denying institution.

#### 6. Factor 6: Other circumstances support institution

The prior art presented in this Petition renders the Challenged Claims unpatentable as obvious. The merits of Petitioners' arguments are compelling because they lead to a strong conclusion that one or more claims are unpatentable by a preponderance of the evidence. This factor therefore weighs against discretionary denial. As such, the *Fintiv* factors are either neutral or weigh against discretionary denial. Because this Petition was filed approximately four months before the statutory bar date, institution should not be denied on discretionary factors.

### B. PTAB should not exercise its discretion to deny institution under *Becton* and *Advanced Bionics*

Furthermore, institution should not be denied under the framework set forth in *Becton, Dickinson & Co. v. B. Braun Melsungen AG*, IPR2017-01586, Paper 8 (Dec. 15, 2017) (precedential as to §III.C.5, first paragraph) and *Advanced Bionics LLC v. MED-EL Elektromedizinische Gerate GmbH*, IPR2019-01469, Paper 6 (PTAB Feb. 13, 2020) (precedential). Although Ke was before the Examiner during prosecution, the Examiner did not have the benefit of evaluating Ke in combination with Lewis as described herein. Furthermore, neither Cook nor Lewis (nor their combination) was before the Examiner during prosecution. Therefore, the arguments presented in this Petition are not the same as, or substantially similar to, arguments previously presented to the Office. Thus, the first prong of the *Advanced Bionics* framework is not met, and there is no need to reach the second prong to resolve against discretionary denial under Section 325(d). *Oticon Medical AB v. Cochlear Ltd.*, IPR2019-00975, Paper 15, 20 (PTAB Oct. 16, 2019) (precedential).

### C. Discretionary denial under *General Plastic* is not appropriate

The ’369 patent has not been challenged in any prior IPR petition, so none of *General Plastic* discretionary institution factors apply to this Petition. *See General Plastic Indus. Co., Ltd. v. Canon Kabushiki Kaisha*, IPR2016-01357, Paper 19, 16 (Sept. 6, 2016) (Section II.B.4.i. precedential).

## X. CONCLUSION

Petitioners have established a reasonable likelihood that the Challenged Claims are unpatentable. Petitioners therefore respectfully request that IPR of the ’369 patent be instituted.

DATED: January 23, 2023

Respectfully Submitted,

*/s/ Stuart Rosenberg*

Stuart Rosenberg
(Reg. No. 60,772)
Gibson, Dunn & Crutcher LLP
1881 Page Mill Road
Palo Alto, CA 94304-1211
Tel: 650-849-5389
SRosenberg@gibsondunn.com

*Attorney for Petitioners Dell Inc., Dell Technologies Inc., and Cisco Systems, Inc.*

**CERTIFICATION UNDER 37 C.F.R. §42.24(d)**

Under the provisions of 37 C.F.R. §42.24(d), the undersigned attorney hereby certifies that the word count for Sections I and III-X of the foregoing Petition for *Inter Partes* Review is 13,349, according to the word count tool in Microsoft Word.

DATED: January 23, 2023

Respectfully Submitted,

*/s/ Stuart Rosenberg*

Stuart Rosenberg
(Reg. No. 60,772)
Gibson, Dunn & Crutcher LLP
1881 Page Mill Road
Palo Alto, CA 94304-1211
Tel: 650-849-5389
SRosenberg@gibsondunn.com

*Attorney for Petitioners Dell Inc., Dell Technologies Inc., and Cisco Systems, Inc.*

## CERTIFICATE OF SERVICE

The undersigned certifies service pursuant to 37 C.F.R. §§42.6(e) and 42.105(a), (b) on the Patent Owner via FedEx Priority Overnight of a copy of this Petition for *Inter Partes* Review and supporting materials at the correspondence address of record for the ’369 patent shown in USPTO PAIR:

May Patents Ltd. (attorney/agent of record)
c/o Dorit Shem-Tov
P. O. Box 7230
Ramat-Gan, - 5217102
Israel

Corrigent Corporation (assignee of record)
291 Main St.
C/O New England Intellectual Property
West Newbury, Massachusetts 01985

DATED: January 23, 2023

Respectfully Submitted,

*/s/ Stuart Rosenberg*

Stuart Rosenberg
(Reg. No. 60,772)
Gibson, Dunn & Crutcher LLP
1881 Page Mill Road
Palo Alto, CA 94304-1211
Tel: 650-849-5389
SRosenberg@gibsondunn.com

*Attorney for Petitioners Dell Inc., Dell Technologies Inc., and Cisco Systems, Inc.*

## APPENDIX: CHALLENGED CLAIM LISTING

| No. | Limitation |
|---|---|
| 1[pre] | In an electronic system that includes a main module and at least first and second subsidiary modules, each of said at least first and second subsidiary modules connected to the main module by one or more lines for carrying data, at least some of which lines are sometimes idle, the main module including a switch having ports connected to the lines, a method for self-testing the system, comprising: |
| 1[a] | selecting a first idle line among idle lines connecting the first subsidiary module to a first port of the switch on the main module to serve as an aid line; |
| 1[b] | instructing the first subsidiary module to loop back traffic reaching the first subsidiary module via the aid line; |
| 1[c] | selecting for testing a second idle line among the idle lines connecting the second subsidiary module to a second port of the switch on the main module; |
| 1[d] | configuring the switch to link the first and second ports; |
| 1[e] | transmitting test traffic over the second idle line from the second subsidiary module to the main module, wherein the test traffic is conveyed via the switch to the aid line connecting to the first subsidiary module; and |
| 1[f] | reporting that a failure has occurred if the test traffic does not return to the second subsidiary module within a predetermined period of time. |
| 2 | A method according to claim 1, wherein instructing the first subsidiary module comprises configuring the first subsidiary module to loop back the traffic to the main module substantially without processing data comprised in the test traffic. |
| 3 | A method according to claim 2, wherein the first and second subsidiary modules are configured to transmit and receive data in different, respective first and second formats, and wherein the test traffic transmitted from the second subsidiary module and looped back by the first subsidiary module is in the second format. |

| No. | Limitation |
|---|---|
| 4 | A method according to claim 1, further comprising: selecting one or more further idle lines for testing among the idle lines in the system, wherein the further idle lines connect to further ports of the switch on the main module; and repeating the configuring the switch, transmitting the test traffic, and reporting that the failure has occurred with respect to the further idle lines until all the idle lines have been tested. |
| 5 | A method according to claim 1, wherein the main module and said at least first and second subsidiary modules comprise cards, which are plugged into a backplane, and wherein the lines comprise traces on the backplane. |
| 6 | A method according to claim 1, wherein the switch is configured to connect the lines to a network communication trunk, and wherein the traffic comprises communication traffic. |
| 7 | A method according to claim 6, wherein transmitting the test traffic comprises testing the second idle line while continuing to use the lines that are not idle for carrying the data to the network communication trunk. |
| 8[pre] | In an electronic system that includes a main module and multiple subsidiary modules, each of said multiple subsidiary modules being connected to the main module by one or more lines for carrying data, a method for self-testing the system, comprising: |
| 8[a] | selecting first and second subsidiary modules of different types for testing among the multiple subsidiary modules, the first and second subsidiary modules being configured to transmit and receive the data in different, respective first and second formats; |
| 8[b] | instructing the first subsidiary module to loop back traffic reaching the first subsidiary module from the main module; |
| 8[c] | configuring the main module to connect the first and second subsidiary modules, so that the traffic transmitted by the second subsidiary module is conveyed to the first subsidiary module via the main module and is then looped back via the main module to the second subsidiary module; and |

| No. | Limitation |
|---|---|
| 8[d] | testing the system by causing the second subsidiary module to transmit test traffic in the second format to the main module, and assessing whether the test traffic is returned intact from the first module. |
| 9 | A method according to claim 8, wherein instructing the first subsidiary module comprises configuring the first subsidiary module to loop back the traffic to the main module substantially without processing data comprised in the test traffic. |
| 10 | A method according to claim 8, wherein the main module and subsidiary modules comprise cards, which are plugged into a backplane, and wherein the lines comprise traces on the backplane. |
| 11 | A method according to claim 8, wherein the main module comprises a switch, which is coupled to connect the lines to a network communication trunk, and wherein configuring the main module comprises configuring the switch to connect at least one of the lines of the first subsidiary module to at least one of the lines of the second subsidiary module. |
| 12 | A method according to claim 11, wherein testing the system comprises testing one or more of the lines of the second subsidiary module while continuing to use at least some of the lines that are not under test for carrying the data from the subsidiary modules to the network communication trunk. |
| 13 | A method according to claim 8, wherein the traffic comprises communication traffic, and wherein the first and second formats are determined respectively by different first and second communication protocols. |
| 14 | A method according to claim 13, wherein one of the first and second protocols is a time domain multiplexing (TDM) protocol, while the other of the first and second protocols is a packet data protocol. |
| 15[pre] | Modular electronic apparatus, comprising: |
| 15[a] | a backplane, which comprises traces for carrying data between modules that are plugged into the backplane; |
| 15[b] | a main module, plugged into the backplane, the main module comprising a switch having ports for connection to the traces of the backplane; |

| No. | Limitation |
|---|---|
| 15[c] | at least first and second subsidiary modules, plugged into the backplane so as to be connected to the main module by the traces, at least some of which traces are sometimes idle; |
| 15[d] | a system control processor, which is operative to select a first idle trace among idle traces connecting the first subsidiary module to a first port of the switch on the main module to serve as an aid trace, |
| 15[e] | to instruct the first subsidiary module to loop back traffic reaching the first subsidiary module via the aid trace, |
| 15[f] | to select for testing a second idle trace among the idle traces connecting the second subsidiary module to a second port of the switch on the main module, |
| 15[g] | to configure the switch to link the first and second ports, |
| 15[h] | the system control processor being further operative to cause test traffic to be transmitted over the second idle trace from the second subsidiary module to the main module, wherein the test traffic is conveyed via the switch to the aid trace connecting to the first subsidiary module, and |
| 15[i] | to report that a failure has occurred if the test traffic does not return to the second subsidiary module within a predetermined period of time. |
| 16 | Apparatus according to claim 15, wherein the first subsidiary module is configured, under control of the system control processor, to loop back the traffic on the aid trace to the main module substantially without processing data comprised in the test traffic. |
| 17 | Apparatus according to claim 16, wherein the first and second subsidiary modules are configured to transmit and receive data in different, respective first and second formats, and wherein the test traffic transmitted from the second subsidiary module and looped back by the first subsidiary module is in the second format. |

| No. | Limitation |
|---|---|
| 18 | Apparatus according to claim 15, wherein the system control processor is operative to select one or more further idle traces for testing among the idle traces in the system, wherein the further idle traces connect to further ports of the switch on the main module, and to repeatedly configure the switch, cause the test traffic to be transmitted, and report the failure when it occurs with respect to the further idle traces until all the idle lines have been tested. |
| 19 | Apparatus according to claim 15, wherein the switch is configured to connect the traces to a network communication trunk, and wherein the traffic comprises communication traffic. |
| 20 | Apparatus according to claim 19, wherein the test traffic is transmitted over the second idle trace while continuing to use the trace that are not idle for carrying the data to the network communication trunk. |
| 21[pre] | Modular electronic apparatus, comprising: |
| 21[a] | a backplane, which comprises traces for carrying data between modules that are plugged into the backplane; |
| 21[b] | a main module, plugged into the backplane; |
| 21[c] | a plurality of subsidiary modules, plugged into the backplane so as to be connected to the main module by the traces; and |
| 21[d] | a system control processor, which is operative to select first and second subsidiary modules of different types for testing among the multiple subsidiary modules, the first and second subsidiary modules being configured to transmit and receive the data in different, respective first and second formats, and which is further operative to test the modules by causing the first subsidiary module to loop back traffic reaching the first subsidiary module from the main module, by configuring the main module to connect the first and second subsidiary modules, so that a traffic transmitted by the second subsidiary module is conveyed to the first subsidiary module via the main module and is then looped back via the main module to the second subsidiary module, and by causing the second subsidiary module to transmit test traffic in the second format to the main module, and assessing whether the test traffic is returned intact from the first module. |

| No. | Limitation |
|---|---|
| 22 | Apparatus according to claim 21, wherein the first subsidiary module is configured to loop back the traffic to the main module substantially without processing the data comprised in the test traffic. |
| 23 | Apparatus according to claim 21, wherein the main module comprises a switch, which is coupled to connect the traces to a network communication trunk, and wherein the system control processor is operative to configure switch to connect at least one of the lines of the first subsidiary module to at least one of the lines of the second subsidiary module during the test. |
| 24 | Apparatus according to claim 23, wherein the system control processor is operative to test one or more of the traces connected to the second subsidiary module while at least some of the traces that are not under test continue to be used for carrying the data from the subsidiary modules to the network communication trunk. |
| 25 | Apparatus according to claim 21, wherein the traffic comprises communication traffic, and wherein the first and second formats are determined respectively by different first and second communication protocols. |
| 26 | Apparatus according to claim 25, wherein one of the first and second protocols is a time domain multiplexing (TDM) protocol, while the other of the first and second protocols is a packet data protocol. |