IN THE UNITED STATES DISTRICT COURT
FOR THE WESTERN DISTRICT OF TEXAS
WACO DIVISION

Corrigent Corporation Plaintiff, v. Cisco Systems, Inc. Defendant.	Civil Action No. 6:22-cv-396 **JURY TRIAL DEMANDED**

COMPLAINT

Plaintiff Corrigent Corporation ("Corrigent" or "Plaintiff"), by its attorneys, demands a trial by jury on all issues so triable and for its complaint against Defendant Cisco Systems, Inc. ("Cisco" or "Defendant"), and alleges as follows:

NATURE OF THE ACTION

1. This is a civil action for patent infringement under the patent laws of the United States, Title 35, United States Code, Section 271, *et seq.*, involving the following United States Patents, collectively, "Asserted Patents," and seeking damages and injunctive relief as provided in 35 U.S.C. §§ 281 and 283–285.

U.S. Patent No. 6,957,369 (Exhibit 1, "'369 patent")
U.S. Patent No. 7,113,485 (Exhibit 2, "'485 patent")
U.S. Patent No. 7,330,431 (Exhibit 3, "'431 patent")
U.S. Patent No. 7,593,400 (Exhibit 4, "'400 patent")
U.S. Patent No. 9,118,602 (Exhibit 5, "'602 patent")

THE PARTIES

2. Plaintiff is a Delaware Corporation. Plaintiff may be served with process through its registered agent for service at Harvard Business Services, Inc., 16192 Coastal Hwy., Lewes, Delaware 19958. Plaintiff is the owner by assignment of the Asserted Patents.

3. Defendant Cisco Systems, Inc. ("Cisco" or "Defendant") is a corporation organized and existing under the laws of the State of Delaware, with its principal place of business located at 170 West Tasman Dr., San Jose, California 95134, and has regular and established places of business throughout this District, including at least at 18615 Tuscany Stone, San Antonio, Texas 78258 and 12515 Research Blvd Bldg 3, Austin, Texas 78759. Defendant may be served with process through its registered agent for service in Texas at Corporation Service Company dba CSC, 211 E. 7th St., Suite 620, Austin, Texas 78701-3218.

JURISDICTION AND VENUE

4. This Court has jurisdiction over the subject matter of this action pursuant to 28 U.S.C. §§ 1331 and 1338(a).

5. On information and belief, jurisdiction and venue for this action are proper in this Judicial District.

6. This Court has personal jurisdiction over Defendant because it (i) has a regular and established place of business in the State of Texas and this Judicial District; (ii) has purposefully availed itself of the rights and benefits of the laws of the State of Texas and this Judicial District; (iii) has done and is doing substantial business in the State of Texas and this Judicial District, directly or through intermediaries, both generally and, on information and belief, with respect to the allegations in this Complaint, including its one or more acts of infringement in the State of Texas and this Judicial District; (iv) maintains continuous and systematic contacts in the State of Texas and this Judicial District; (v) and/or places products alleged to be infringing in this Complaint in the stream of commerce with awareness that those products are sold and offered for sale in the State of Texas and this Judicial District. Defendant has established sufficient minimum contacts with the State of Texas and this Judicial District such that it should reasonably and fairly

anticipate being brought into court in the State of Texas and this Judicial District without offending traditional notions of fair play and substantial justice; and Defendant has purposefully directed activities at residents of the State of Texas and this Judicial District. Moreover, at least a portion of the patent infringement claims alleged herein arise out of or are related to one or more of the foregoing activities. On information and belief, a substantial part of the events giving rise to Plaintiff's claims, including acts of patent infringement, have occurred in the State of Texas and this Judicial District.

7. Venue is proper in this Judicial District as to Defendant under 28 U.S.C. § 1400(b) at least because it has committed acts of infringement and has a regular and established place of business in this Judicial District.

CORRIGENT-SYSTEMS AND ITS PIONEERING TELECOMMUNICATIONS TECHNOLOGY

8. Corrigent-Systems Ltd. (a.k.a. Orckit Communications Ltd.) ("Corrigent-Systems" or "Orckit") was founded in 1990 by Izhak Tamir, and went public and was listed on the Nasdaq Stock Exchange in 1996.

9. Corrigent-Systems was a pioneer in the telecommunications field, with sales of its telecommunications products exceeding $500M to various global telecommunications providers such as Deutche Telekom (Germany) and Kokusai Denshin Denwa International ("KDDI") (Japan). Between 1990 and 2000, Corrigent-Systems became the market leader in asymmetric digital subscriber line (ADSL) technology.

10. In 2000, Corrigent-Systems started to develop new telecommunications products in the area of Ethernet switching and routing to optimize the transmission of voice and data over Internet Protocol (IP) telecommunications networks. At the time, the field of Ethernet switching and routing suffered many drawbacks. Early Ethernet technology used for sharing data in offices

and enterprises was not easily suited to serve as the backbone for telecommunications service providers. For example, early Ethernet technology, used to connect a few computers in an office, could not meet the reliability and resiliency requirements of service providers, where a single connection may serve thousands of subscribers using different services in parallel. Nor could early Ethernet technology support real-time streaming, guarantee a minimum or even consistent delay, avoid back-up delay if a failure in the network occurs (e.g., a cable is damaged), or support the broadcasting of high-data-rate data to multiple end points required by, for example, television service providers.

11. Corrigent-Systems was a pioneer in overcoming these technology challenges. Between 2000 and 2010, Corrigent-Systems invested approximately $200M toward research and development of its new Ethernet switching and routing products. Corrigent-Systems identified and solved several obstacles in the field, and, as a result, was awarded hundreds of patents including the Asserted Patents, spanning over 70 patent families. Corrigent-Systems' product line revolutionized the telecommunications industry. For example, KDDI in Japan deployed a country-wide network of more than 2,000 Corrigent-Systems Ethernet switch products as early as 2005, a time when Corrigent-Systems' competitors lagged significantly behind Corrigent-Systems and its innovative products and solutions.

12. The industry recognized Corrigent-Systems' innovation. In a research study by Bart Stuck & Michael Weingarten published in IEEE, Corrigent-Systems was ranked in the top twenty innovative companies among hundreds of public companies. Stuck, B. and Weingarten, M., "How Venture Capital Thwarts Innovation," IEEE Spectrum (April 2005).

13. Plaintiff Corrigent Corporation obtained all rights in the asserted patents.

THE ASSERTED PATENTS

U.S. Patent No. 6,957,369

14. Plaintiff is the lawful owner of all right, title, and interest in U.S. Patent No. 6,957,369 ("'369 patent") entitled "HIDDEN FAILURE DETECTION," including the right to sue and recover for infringement thereof. A copy of the '369 patent is attached hereto as Exhibit 1, which was duly and legally issued on October 18, 2005, naming Leon Bruckman and Shmuel Ilan as the inventors.

15. The '369 patent has 26 claims: 4 independent claims and 22 dependent claims.

16. The '369 patent presented novel and unconventional systems and methods for "diagnostic testing of electronic equipment, and specifically to non-intrusive self-testing of communication systems." Ex. 1, '369 patent at 1:5–7; *id*. at Abstract. The inventions of the '369 patent, for example, "enable[] an electronic system to test its idle lines and components and detect hidden failures without intruding on normal traffic carried by the system's active lines." *Id*. at 2:26–29. "The testing method makes use of existing components in the system and requires substantially no dedicated testing hardware. It is applicable to all types of subsidiary modules, even in systems that mix different modules using different data formats and communication protocols." *Id*. at 31–28. One embodiment of the inventions of the '369 patent is shown in FIG. 1, reproduced below.

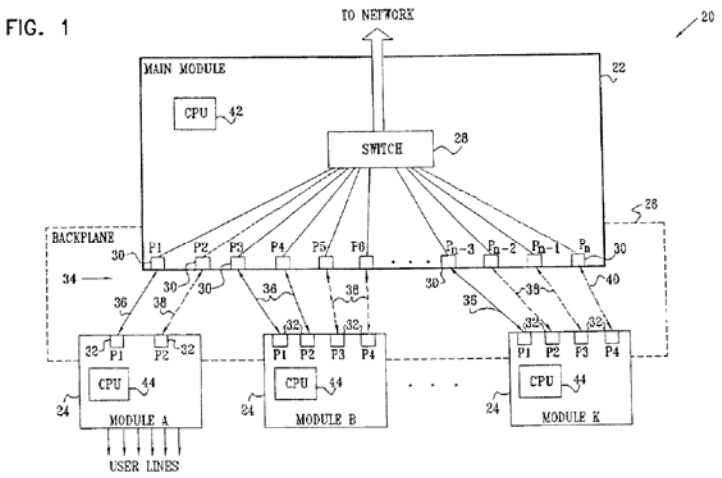

Id. at Fig. 1; *see also id*. at 4:54–5:54.

17. The claims of the ’369 patent, including claim 15 (reproduced below), recite at least these inventive concepts of the ’369 patent.

> 15. Modular electronic apparatus, comprising:
>
> a backplane, which comprises traces for carrying data between modules that are plugged into the backplane;
>
> a main module, plugged into the backplane, the main module comprising a switch having ports for connection to the traces of the backplane;
>
> at least first and second subsidiary modules, plugged into the backplane so as to be connected to the main module by the traces, at least some of which traces are sometimes idle; and
>
> a system control processor, which is operative to select a first idle trace among idle traces connecting the first subsidiary module to a first port of the switch on the main module to serve as an aid trace, to instruct the first subsidiary module to loop back traffic reaching the first subsidiary module via the aid trace, to select for testing a second idle trace among the idle traces connecting the second subsidiary module to a second port of the switch on the main module, and to configure the switch to link the first and second ports, the system control processor being further operative to cause test traffic to be transmitted over the second idle trace from the second subsidiary module to the main module, wherein the test traffic is conveyed via the switch to the aid trace connecting to the first subsidiary module, and to report that a failure has occurred if the test traffic does not return to the second subsidiary module within a predetermined period of time.

Id. at claim 15.

18. The subject matter described and claimed in the ’369 patent, including the subject matter of claim 15, was an improvement in computer and communications functionality, performance, and efficiency, and was novel and not well-understood, routine, or conventional at the time of the ’369 patent.

19. On information and belief, Defendant had knowledge of the ’369 patent, including at least as of March 2017 when Orckit IP LLC (“Orckit IP”)—a prior owner of the Asserted Patents—initiated discussions with Defendant about its patent portfolio, including the Asserted Patents, as described and alleged below, and at least as of the filing of this Complaint.

U.S. Patent No. 7,113,485

20. Plaintiff is the lawful owner of all right, title, and interest in U.S. Patent No. 7,113,485 (“’485 patent”) entitled “LATENCY EVALUATION IN A RING NETWORK,” including the right to sue and recover for infringement thereof. A copy of the ’485 patent is attached as Exhibit 2, which was duly and legally issued on September 26, 2006, naming Leon Bruckman as the inventor.

21. The ’485 patent has 20 claims: 6 independent claims and 14 dependent claims.

22. The ’485 patent presented novel and unconventional systems and methods “for measuring network latency, particularly in ring topologies.” Ex. 2, ’485 patent at 2:59–61; *id*. at 1:6–10, Abstract. The inventions of the ’485 patent, for example, “provide simple, accurate methods for measuring round-trip latency between pairs of nodes in a network.” *Id*. at 2:65–67. One embodiment of the inventions of the ’485 patent is shown in FIG. 1, reproduced below.

FIG. 1

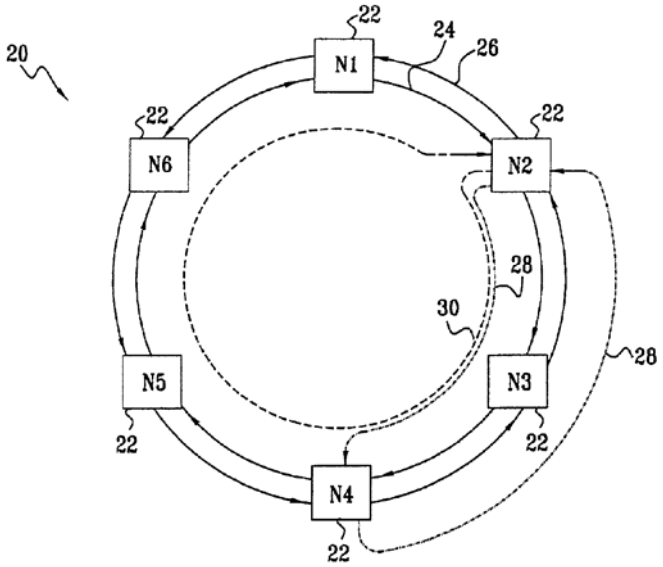

Id. at Fig. 1; *see also id*. at 6:22–40.

23. The claims of the ’485 patent, including claim 16 (reproduced below), recite at least these inventive concepts of the ’485 patent.

> 16. Apparatus for measuring latency in a network in which traffic is transmitted in a plurality of classes of service, the apparatus comprising a node in the network, which generates a latency measurement packet containing an indication that the packet belongs to a selected one of the classes of service and to transmit the latency measurement packet, so that the packet is passed through the network at a level of service accorded to the class, the node notes a time of receipt of the latency measurement packet at a destination in the network and to calculate the latency for the selected one of the classes of service by taking a difference between a time of transmission of the latency measurement packet and the time of receipt thereof.

Id. at claim 16.

24. The subject matter described and claimed in the ’485 patent, including the subject matter of claim 16, was an improvement in computer and communications functionality, performance, and efficiency, and was novel and not well-understood, routine, or conventional at the time of the ’485 patent.

25. On information and belief, Defendant had knowledge of the ’485 patent, including at least as of March 2017 when Orckit IP initiated discussions with Defendant about its patent

portfolio, including the Asserted Patents, and at least as of November 20, 2017, when Orckit IP notified Defendant of the asserted ’485 patent, among others in its portfolio, and offered to send Defendant exemplary “evidence of use charts” relating to the ’485 patent, as described and alleged below, and at least as of the filing of this Complaint. Ex. 20, 2018-11-20 Wan Email.

U.S. Patent No. 7,330,431

26. Plaintiff is the lawful owner of all right, title, and interest in U.S. Patent No. 7,330,431 (“’431 patent”) entitled “MULTIPOINT TO MULTIPOINT COMMUNICATION OVER RING TOPOLOGIES,” including the right to sue and recover for infringement thereof. A copy of the ’431 patent is attached as Exhibit 3, which was duly and legally issued on February 12, 2008, naming Leon Bruckman as the inventor.

27. The ’431 patent has 30 claims: 5 independent claims and 25 dependent claims.

28. The ’431 patent presented novel and unconventional systems and methods concerning communications within a network, and specifically for “optimizing bandwidth allocation for the data in the network.” Ex. 3, ’431 patent at 1:7–9; *id*. at Abstract (“A method for assigning bandwidth in a network including nodes coupled by links arranged in a physical topology . . . .”). In embodiments of the ’431 patent, actual bandwidths of links in a physical network are assigned according to the logical connectivity of notes in services carried by the network. *Id*. at 2:11–35. The inventions of the ’431 patent, for example, provide “a simple and effective way to allocate bandwidth correctly and efficiently, particularly guaranteed bandwidth.” *Id*. at 2:31–35. One embodiment of the inventions of the ’431 patent is shown in FIG. 1, reproduced below.

FIG. 3

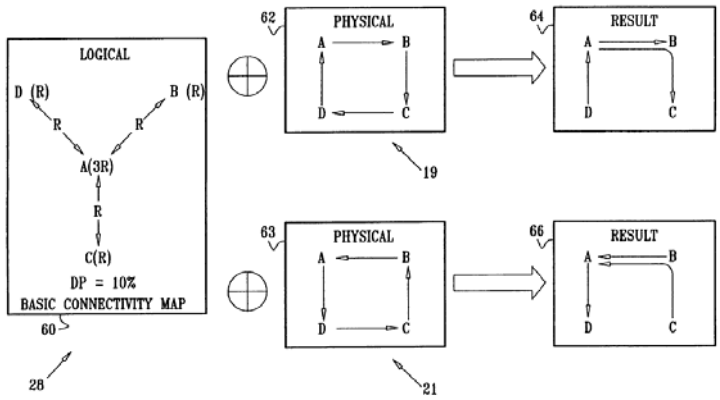

Id. at Fig. 3; *see also id*. at 7:63–10:8.

29. The claims of the ’431 patent, including claim 25, recite at least these inventive concepts of the ’431 patent.

> 25. Apparatus for assigning bandwidth in a network including nodes coupled by links arranged in a physical topology, the apparatus comprising:
>
> a controller which is adapted to:
>
> receive a definition of logical connections between the nodes, the logical connections being associated with a data transmission service to be provided over the network, the logical connections having a connection topology different from the physical topology,
>
> determine respective bandwidth requirements for the logical connections based on parameters of the service,
>
> map the connection topology to the physical topology, so that each of the logical connections is associated with one or more links of the physical topology, and
>
> allocate a bandwidth for the service on each of the links in response to the bandwidth requirements of the logical connections and to the mapping.

Id. at claim 25.

30. The subject matter described and claimed in the ’431 patent, including the subject matter of claim 25, was an improvement in computer and communications functionality, performance, and efficiency, and was novel and not well-understood, routine, or conventional at

the time of the ’431 patent.

31. On information and belief, Defendant had knowledge of the ’431 patent, including at least as of March 2017 when Orckit IP initiated discussions with Defendant about its patent portfolio, including the Asserted Patents, as described and alleged below, and at least as of the filing of this Complaint.

U.S. Patent No. 7,593,400

32. Plaintiff is the lawful owner of all right, title, and interest in U.S. Patent No. 7,593,400 (“’400 patent”) entitled “MAC ADDRESS LEARNING IN A DISTRIBUTED BRIDGE,” including the right to sue and recover for infringement thereof. A copy of the ’400 patent is attached as Exhibit 4, which was duly and legally issued on September 22, 2009, naming David Zelig, Leon Bruckman, Ronen Solomon, Zeev Oster, David Rozenberg, and Uzi Khill as the inventors.

33. The ’400 patent has 20 claims: 2 independent claims and 18 dependent claims.

34. The ’400 patent presented novel and unconventional systems and methods “for bridging in virtual private LAN services (VPLS) and other distributed bridging systems.” Ex. 4, ’400 patent at 1:6–9. The inventions of the ’400 patent, for example, provide “improved methods for MAC learning and network nodes that implement such methods,” which “are useful especially in the context of nodes that are configured to serve as virtual bridges in Layer 2 virtual private networks, as well as in distributed bridge nodes of other types, particularly when multiple ports of the node are conjoined in a LAG group,” and may be applied in different situations to, for example, “to facilitate MAC learning in any distributed MAC learning environment.” *Id*. at 2:60–3:2. One embodiment of the inventions of the ’400 patent is shown in FIG. 3, “a flow chart that schematically illustrates a method for MAC learning,” reproduced below.

FIG. 3

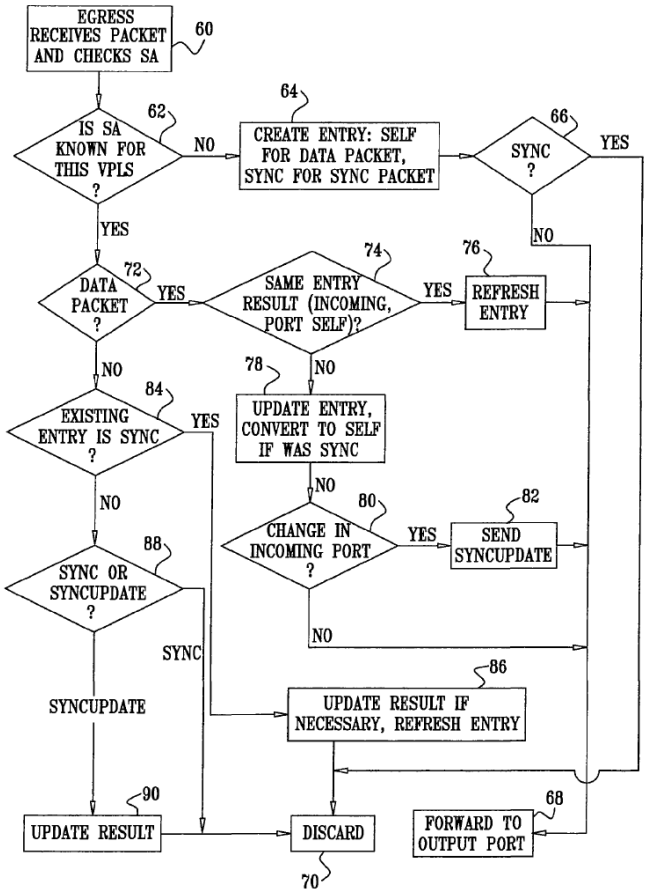

Id. at Fig. 3; *see also id*. at 7:55–10:48.

35. The claims of the ’400 patent, including claim 1 (reproduced below), recite at least these inventive concepts of the ’400 patent.

> 1. A method for communication, comprising:
>
> configuring a network node having a plurality of ports, and at least first and second line cards with respective first and second ports, to operate as a distributed media access control (MAC) bridge in a Layer 2 data network;
>
> configuring a link aggregation (LAG) group of parallel physical links between two endpoints in said Layer 2 data network joined together into a single logical link, said LAG group having a plurality of LAG ports and a plurality of conjoined member line cards;
>
> providing for each of said member line cards a respective forwarding database (FDB) to hold records associating MAC addresses with ports of said plurality of ports of said network node;

> receiving a data packet on an ingress port of said network node from a MAC source address, said data packet specifying a MAC destination address on said Layer 2 data network;
>
> conveying, by transmitting said data packet to said MAC destination address via said first port, said received data packet in said network node to at least said first line card for transmission to said MAC destination address;
>
> if said MAC destination address does not appear in said FDB, flooding said data packet via one and only one LAG port of said plurality of LAG ports;
>
> checking said MAC source address of the data packet against records in said FDB of said first line card; and
>
> if said FDB of said first line card does not contain a record of an association of said MAC source address with said ingress port, creating a new record of said association, adding said new record to the FDB of said first line card, and sending a message of the association to each member line card of said plurality of member line cards.

Id. at claim 1.

36. The subject matter described and claimed in the ’400 patent, including the subject matter of claim 1, was an improvement in computer and communications functionality, performance, and efficiency, and was novel and not well-understood, routine, or conventional at the time of the ’400 patent.

37. On information and belief, Defendant had knowledge of the ’400 patent, including at least as of March 2017 when Orckit IP initiated discussions with Defendant about its patent portfolio, including the Asserted Patents, as described and alleged below, and at least as of the filing of this Complaint.

U.S. Patent No. 9,118,602

38. Plaintiff is the lawful owner of all right, title, and interest in U.S. Patent No. 9,118,602 (“’602 patent”) entitled “TUNNEL PROVISIONING WITH LINK AGGREGATION,” including the right to sue and recover for infringement thereof. A copy of the ’602 patent is attached as Exhibit 5, which was duly and legally issued on August 25, 2015, naming Ronen

Solomon as the inventor.

39. The ’602 patent has 26 claims: 3 independent claims and 23 dependent claims.

40. The ’602 patent presented novel and unconventional systems and methods concerning communication networks, including for “performing link aggregation in tunneled networks.” *See* Ex. 5, ’602 patent at 1:19–20; *see also id*. at Abstract. The ’602 patent describes:

> In MPLS, each packet is assigned to a Forwarding Equivalence Class (FEC) when it enters the network, depending on its destination address. The packet receives a fixed-length label, referred to as an “MPLS label” identifying the FEC to which it belongs. All packets in a given FEC are passed through the network over the same path by label-switching routers (LSRs). The flow of packets along a label-switched path (LSP) under MPLS is completely specified by the label applied at the ingress node of the path. Therefore, an LSP can be viewed as a tunnel through the network.

Id. at 1:34–43. The ’602 further describes “Ethernet Link Aggregation”:

> Link aggregation (LAG) is a technique by which a group of parallel physical links between two endpoints in a data network can be joined together into a single logical link (referred to as a “LAG group”). Traffic transmitted between the endpoints is distributed among the physical links in a manner that is transparent to the clients that send and receive the traffic. For Ethernet networks, link aggregation is defined by Clause 43 of IEEE Standard 802.3ad, Carrier Sense Multiple Access with Collision Detection (CSMA/CD) Access Method and Physical Layer Specifications (2002 Edition), which is incorporated herein by reference. Clause 43 defines a link aggregation protocol sub-layer, which interfaces between the standard Media Access Control (MAC) layer functions of the physical links in a link aggregation group and the MAC clients that transmit and receive traffic over the aggregated links.

Id. at 2:2–17.

41. The inventions of the ’602 patent, for example, “provide tunnel provisioning with link aggregation.” *Id*. at 2:29–30. The ’602 describes how describe how its inventions “ensure that sufficient bandwidth will be available on the links in the group in order to meet service guarantees, notwithstanding load fluctuations and link failures.” *Id*. at 2:22–25. One embodiment of the inventions of the ’602 patent is shown in FIGs. 1A and 1B, reproduced below.

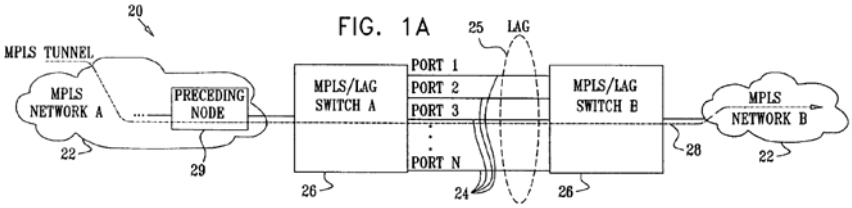

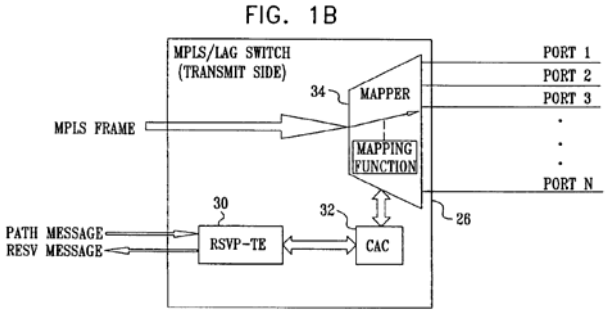

Id. at FIGs. 1A and 1B; *see also id*. at 3:62–5:22.

42. The claims of the ’602 patent, including claim 1 (reproduced below), recite at least these inventive concepts of the ’602 patent.

> 1. A method for assigning and utilizing an Ethernet physical data port in an Ethernet Link Aggregation Group (LAG) in a Multi-Protocol Label Switching (MPLS) network, the method comprising the steps of:
>
> assigning, by a first MPLS/LAG switch, a single physical tunnel port of a LAG to a network tunnel, wherein the single physical tunnel port of the LAG meets a bandwidth requirement of the network tunnel, and wherein said single physical tunnel port of the LAG has a port serial number;
>
> dedicating a sub-set of bits in a data packet label prepared by the first MPLS/LAG switch to encode said port serial number of said single physical tunnel port of the LAG into the data packet label;
>
> sending, by said first MPLS/LAG switch, the data packet label, in which said port serial number of said single physical tunnel port is encoded, to a preceding node;
>
> receiving from the preceding node, by said first MPLS/LAG switch, a data packet comprising said data packet label, in which said port serial number of said single physical tunnel port is encoded; and
>
> sending said data packet from said first MPLS/LAG switch to a second MSPLS/LAG switch via said single physical tunnel port having the port serial number encoded in the data packet label.

Id. at claim 1.

43. The subject matter described and claimed in the ’602 patent, including the subject matter of claim 1 of the ’602 patent, was an improvement in computer and communications functionality, performance, and efficiency, and was novel and not well-understood, routine, or conventional at the time of ’602 patent.

44. On information and belief, Defendant had knowledge of the ’602 patent, including at least as of March 2017 when Orckit IP initiated discussions with Defendant about its patent portfolio, including the Asserted Patents, as described and alleged below, and at least as of the filing of this Complaint.

BACKGROUND OF DEFENDANT’S INFRINGING CONDUCT

45. Defendant Cisco Systems Inc. is a networking hardware company that makes, uses, sells, offers for sale in the United States, and/or imports into the United States, or has otherwise made, used, sold, offered for sale in the United States, and/or imported in the United States, routers and switches that infringe the Asserted Patents.

46. Defendant’s products that infringe the Asserted Patents (collectively, “Accused Products”) include the following:

Accused Products	Asserted Patents
Cisco ASR 9000	’485 and ’400 patents
Cisco Nexus 9000 Series Switches	’369 and ’602 patents
Cisco’s “Collaboration Platform” Compatible Products (*e.g.*, Cisco BE7000)	’431 patent

The above-listed Accused Products are non-limiting. Additional products may infringe the Asserted Patents, and the above-listed Accused Products may infringe additional patents or other Asserted Patents.

47. Defendant infringes and continues to infringe the Asserted Patents by making, using, selling, offering to sell, and/or importing, without license or authority, the Accused Products

as alleged herein.

48. Comparison of claims of the Asserted Patents to the Accused Products are attached as Exhibit 6 ('369 patent), Exhibit 7 ('485 patent), Exhibit 8 ('431 patent), Exhibit 9 ('400 patent), Exhibit 10 ('602 patent), and incorporated herein by reference. Defendant markets, advertises, offers for sale, and/or otherwise promotes the Accused Products and, on information and belief, does so to induce, encourage, instruct, and aid one or more persons in the United States to make, use, sell, and/or offer to sell their Accused Products. For example, Defendant advertises, offers for sale, and/or otherwise promotes the Accused Products on its website. Defendant further publishes and distributes data sheets, manuals, and guides for the Accused Products. *See, e.g.*, Ex. 11, "Cisco ASR 9000 Series Aggregation Services Routers" (2021) (publicly available at https://www.cisco.com/c/en/us/products/collateral/routers/asr-9000-series-aggregation-services-routers/data_sheet_c78-501767.pdf); Ex. 12, "Segment Routing Configuration Guide for Cisco ASR 9000 Series Routers, IOS XR Release 7.3.x," Chapter 1100 (March 11, 2022) (publicly available at https://www.cisco.com/c/en/us/td/docs/routers/asr9000/software/asr9k-r7-3/segment-routing/configuration/guide/b-segment-routing-cg-asr9000-73x/b-segment-routing-cg-asr9000-71x_chapter_01100.pdf); Ex. 13, "Cisco Nexus 9500 Series Switches" (2021) (publicly available at https://www.cisco.com/c/en/us/products/collateral/switches/nexus-9000-series-switches/datasheet-c78-729404.pdf); Ex. 14, excerpt of "Preferred Architecture for Cisco Collaboration 14 Enterprise On-Premises Deployments, Cisco Validated Design (CVD) Guide" (May 21, 2021) (publicly available at https://www.cisco.com/c/en/us/td/docs/solutions/CVD/Collaboration/enterprise/14/collbcvd.pdf); Ex. 15, "Cisco Collaboration Preferred Architectures" (Jan. 14, 2022) (publicly available at https://www.cisco.com/c/en/us/td/docs/voice_ip_comm/uc_system/design/guides/PAdocs.pdf).

Therein, Defendant describes and touts the use of the subject matter claimed in the Asserted Patents, as described and alleged below.

BACKGROUND OF DEFENDANT'S KNOWLEDGE OF THE INVENTIONS DESCRIBED AND CLAIMED IN THE ASSERTED PATENTS

49. On information and belief, Defendant has had knowledge of the Asserted Patents and the inventions described and claimed therein since at least around March 2017, when Orckit IP—a prior owner of the Asserted Patents—initiated discussions with Defendant about the Asserted Patents and the Accused Products.

50. On March 20 2017, Orckit IP sent letter to Defendant concerning its "Patent Portfolio." Ex. 16, 2017-03-20, Hallaj Ltr. In that letter, Orckit IP notified Defendant that it "owns a patent portfolio related to certain communications technologies developed by Orckit Communications Ltd. and Corrigent Systems Ltd. (f/k/a Orckit-Corrigent Ltd.). Orckit IP's patent portfolio includes over 100 patents and pending patent applications. One or more of these patents and patent applications may be of interest to Cisco and require your company's attention." *Id*. Orckit IP further identified several "Cisco switches and routers," including the Cisco Nexus 9000 Series Switches, which are accused of infringing the Asserted Patents in this case. *Id*. Orckit IP concluded: "Accordingly, Cisco may be interested in obtaining a license to (or acquiring) the '983 Patent and/or other patent assets from Orckit IP's patent portfolio." *Id*.

51. On April 10, 2017, Defendant responded by letter and requested additional information. Ex. 17, 2017-04-10, Showalter Ltr.

52. On July 11, 2018, Orckit IP sent a second notice letter to Defendant, again concerning its "Patent Portfolio." Ex. 18, 2018-07-11, Hallaj Ltr. Orckit IP again notified Defendant that Orckit IP's patent portfolio relates to Defendant's switch and router products. *Id*. Orckit IP concluded: "Accordingly, Cisco may be interested in obtaining a license to (or acquiring)

the '821 Patent, the '928 Patent, and/or other patent assets from Orckit IP's patent portfolio (in addition to the '983 Patent, discussed above)." *Id*.

53. On July 25, 2018, Defendant responded by letter and requested additional information. Ex. 19, 2018-07-25, Walters Ltr.

54. On November 20, 2018, Orckit IP identified additional patents within its patent portfolio, including the asserted '485 patent. Ex. 20, 2018-11-20 Wan Email. Orckit IP offered to send Defendant exemplary "evidence of use charts" relating to any of the patents, including the asserted '485 patent. *Id*.

55. Defendant has also had knowledge of the Asserted Patents and the inventions described and claimed therein since at least as of the filing of this Complaint.

COUNT I – INFRINGEMENT OF U.S. PATENT NO. 6,957,369

56. Plaintiff incorporates by reference the allegations contained in paragraphs 1–55.

57. Defendant has made, used, offered for sale, sold, and/or imported products, including at least the Accused Products, that infringe, either literally or under the doctrine of equivalents, one or more claims of the '369 patent in violation of 35 U.S.C. § 271(a), including claim 15. A comparison of claim 15 of the '369 patent to the Accused Products is attached as Exhibit 6, which is incorporated herein by reference.

58. On information and belief, with knowledge of the '369 patent, Defendant has actively induced and continues to induce the direct infringement of one or more claims of the '369 patent, including claim 15, in violation of 35 U.S.C. § 271(b) by its customers and/or end users of their products, including at least the Accused Products, by selling, providing support for, providing instructions for use of, and/or otherwise encouraging its customers and/or end-users to directly infringe, either literally and/or under the doctrine of equivalents, one or more claims of the '369 patent, including claim 15, with the intent to encourage those customers and/or end-users to

infringe the ’369 patent.

59. By way of example, on information and belief, Defendant actively induces infringement of the ’369 patent by encouraging, instructing, and aiding one or more persons in the United States, including but not limited to customers and end users who purchase, test, operate, and use Defendant’s products, including at least the Accused Products, to make, use, sell, and/or offer to sell Defendant’s products, including at least the Accused Products, in a manner that infringes at least one claim of the ’369 patent, including claim 15. For example, as described above, Defendant actively markets, advertises, offers for sale, and/or otherwise promotes its Accused Products on its website. Defendant further actively markets, advertises, offers for sale, and/or otherwise promotes its Accused Products by publishing and distributing data sheets, manuals, and guides for the Accused Products. Therein, Defendant describes and touts the use of the subject matter claimed in the ’369 patent.

60. On information and belief, with knowledge of the ’369 patent, Defendant also contributes to the infringement of one or more claims of the ’369 patent in violation of 35 U.S.C. § 271(c), including claim 15, by making, using, offering to sell or selling and/or importing a patented component or material constituting a material part of the invention, including at least the Accused Products, knowing the same to be especially made or especially adapted for use in an infringement and not a staple article or commodity of commerce suitable for substantial non-infringing use. This is evidenced by, among other things, the design, configuration, and functionality of Defendant’s Accused Products, which are especially made or especially adapted for use in an infringement of the ’369 patent when used for their normal and intended purpose. This is also evidenced by, among other things, Defendant’s informational and promotional materials described above, which describe the normal use and intended purpose of the Accused

Products and demonstrate that the Accused Products are especially made or especially adapted for a use that infringes the ’369 patent.

61. As a result of Defendant’s inducement of, and/or contribution to, infringement, its customers and/or end users made, used, sold, or offered for sale, and continue to make, use, sell, or offer to sell Defendant’s products, including the Accused Products, in ways that directly infringe one or more claims of the ’369 patent, including claim 15. On information and belief, Defendant had actual knowledge of its customers’ and/or end users’ direct infringement at least by virtue of its sales, instruction, and/or otherwise promotion of Defendant’s products, including the Accused Products, at least as of March 2017 when Orckit IP initiated discussions with Defendant about its patent portfolio, including the Asserted Patents, and no later than the filing of this Complaint.

62. On information and belief, with knowledge of the ’369 patent, Defendant has willfully, deliberately, and intentionally infringed the ’369 patent, and continues to willfully, deliberately, and intentionally infringe the ’369 patent. On information and belief, Defendant had actual knowledge of the ’369 patent and Defendant’s infringement of the ’369 patent as set forth above. On information and belief, after acquiring that knowledge, Defendant directly and indirectly infringed the ’369 patent as set forth above. On information and belief, Defendant knew or should have known that its conduct amounted to infringement of the ’369 patent at least because Plaintiffs notified Defendant of the ’369 patent and its infringement of the ’369 patent as set forth above.

63. On information and belief, Defendant will continue to infringe the ’369 patent unless and until it is enjoined by this Court. Defendant, by way of its infringing activities, has caused and continues to cause Plaintiff to suffer damages in an amount to be determined, and has caused and is causing Plaintiff irreparable harm. Plaintiff has no adequate remedy at law against

Defendant's acts of infringement and, unless it is enjoined from its infringement of the '369 patent, Plaintiff will continue to suffer irreparable harm.

64. Plaintiff is entitled to recover from Defendant damages at least in an amount adequate to compensate for its infringement of the '369 patent, which amount has yet to be determined, together with interest and costs fixed by the Court.

65. Plaintiff has complied with 35 U.S.C. § 287 with respect to the '369 patent.

COUNT II – INFRINGEMENT OF U.S. PATENT NO. 7,113,485

66. Plaintiff incorporates by reference the allegations contained in paragraphs 1–65.

67. Defendant has made, used, offered for sale, sold, and/or imported products, including at least the Accused Products, that infringe, either literally or under the doctrine of equivalents, one or more claims of the '485 patent in violation of 35 U.S.C. § 271(a), including claim 16. A comparison of claim 16 of the '485 patent to the Accused Products is attached as Exhibit 7, which is incorporated herein by reference.

68. On information and belief, with knowledge of the '485 patent, Defendant has actively induced and continues to induce the direct infringement of one or more claims of the '485 patent, including claim 16, in violation of 35 U.S.C. § 271(b) by its customers and/or end users of their products, including at least the Accused Products, by selling, providing support for, providing instructions for use of, and/or otherwise encouraging its customers and/or end-users to directly infringe, either literally and/or under the doctrine of equivalents, one or more claims of the '485 patent, including claim 16, with the intent to encourage those customers and/or end-users to infringe the '485 patent.

69. By way of example, on information and belief, Defendant actively induces infringement of the '485 patent by encouraging, instructing, and aiding one or more persons in the United States, including but not limited to customers and end users who purchase, test, operate,

and use Defendant's products, including at least the Accused Products, to make, use, sell, and/or offer to sell Defendant's products, including at least the Accused Products, in a manner that infringes at least one claim of the '485 patent, including claim 16. For example, as described above, Defendant actively markets, advertises, offers for sale, and/or otherwise promotes its Accused Products on its website. Defendant further actively markets, advertises, offers for sale, and/or otherwise promotes its Accused Products by publishing and distributing data sheets, manuals, and guides for the Accused Products. Therein, Defendant describes and touts the use of the subject matter claimed in the '485 patent.

70. On information and belief, with knowledge of the '485 patent, Defendant also contributes to the infringement of one or more claims of the '485 patent in violation of 35 U.S.C. § 271(c), including claim 16, by making, using, offering to sell or selling and/or importing a patented component or material constituting a material part of the invention, including at least the Accused Products, knowing the same to be especially made or especially adapted for use in an infringement and not a staple article or commodity of commerce suitable for substantial non-infringing use. This is evidenced by, among other things, the design, configuration, and functionality of Defendant's Accused Products, which are especially made or especially adapted for use in an infringement of the '485 patent when used for their normal and intended purpose. This is also evidenced by, among other things, Defendant's informational and promotional materials described above, which describe the normal use and intended purpose of the Accused Products and demonstrate that the Accused Products are especially made or especially adapted for a use that infringes the '485 patent.

71. As a result of Defendant's inducement of, and/or contribution to, infringement, its customers and/or end users made, used, sold, or offered for sale, and continue to make, use, sell,

or offer to sell Defendant's products, including the Accused Products, in ways that directly infringe one or more claims of the '485 patent, including claim 16. On information and belief, Defendant had actual knowledge of its customers' and/or end users' direct infringement at least by virtue of its sales, instruction, and/or otherwise promotion of Defendant's products, including the Accused Products, at least as of March 2017 when Orckit IP initiated discussions with Defendant about its patent portfolio, including the Asserted Patents, and no later than the filing of this Complaint.

72. On information and belief, with knowledge of the '485 patent, Defendant has willfully, deliberately, and intentionally infringed the '485 patent, and continues to willfully, deliberately, and intentionally infringe the '485 patent. On information and belief, Defendant had actual knowledge of the '485 patent and Defendant's infringement of the '485 patent as set forth above. On information and belief, after acquiring that knowledge, Defendant directly and indirectly infringed the '485 patent as set forth above. On information and belief, Defendant knew or should have known that its conduct amounted to infringement of the '485 patent at least because Plaintiffs notified Defendant of the '485 patent and its infringement of the '485 patent as set forth above.

73. On information and belief, Defendant will continue to infringe the '485 patent unless and until it is enjoined by this Court. Defendant, by way of its infringing activities, has caused and continues to cause Plaintiff to suffer damages in an amount to be determined, and has caused and is causing Plaintiff irreparable harm. Plaintiff has no adequate remedy at law against Defendant's acts of infringement and, unless it is enjoined from its infringement of the '485 patent, Plaintiff will continue to suffer irreparable harm.

74. Plaintiff is entitled to recover from Defendant damages at least in an amount adequate to compensate for its infringement of the '485 patent, which amount has yet to be

determined, together with interest and costs fixed by the Court.

75. Plaintiff has complied with 35 U.S.C. § 287 with respect to the ’485 patent.

COUNT III – INFRINGEMENT OF U.S. PATENT NO. 7,330,431

76. Plaintiff incorporates by reference the allegations contained in paragraphs 1–75.

77. Defendant has made, used, offered for sale, sold, and/or imported products, including at least the Accused Products, that infringe, either literally or under the doctrine of equivalents, one or more claims of the ’431 patent in violation of 35 U.S.C. § 271(a), including claim 25. A comparison of claim 25 of the ’431 patent to the Accused Products is attached as Exhibit 8, which is incorporated herein by reference.

78. On information and belief, with knowledge of the ’431 patent, Defendant has actively induced and continues to induce the direct infringement of one or more claims of the ’431 patent, including claim 25, in violation of 35 U.S.C. § 271(b) by its customers and/or end users of their products, including at least the Accused Products, by selling, providing support for, providing instructions for use of, and/or otherwise encouraging its customers and/or end-users to directly infringe, either literally and/or under the doctrine of equivalents, one or more claims of the ’431 patent, including claim 25, with the intent to encourage those customers and/or end-users to infringe the ’431 patent.

79. By way of example, on information and belief, Defendant actively induces infringement of the ’431 patent by encouraging, instructing, and aiding one or more persons in the United States, including but not limited to customers and end users who purchase, test, operate, and use Defendant’s products, including at least the Accused Products, to make, use, sell, and/or offer to sell Defendant’s products, including at least the Accused Products, in a manner that infringes at least one claim of the ’431 patent, including claim 25. For example, as described above, Defendant actively markets, advertises, offers for sale, and/or otherwise promotes its

Accused Products on its website. Defendant further actively markets, advertises, offers for sale, and/or otherwise promotes its Accused Products by publishing and distributing data sheets, manuals, and guides for the Accused Products. Therein, Defendant describes and touts the use of the subject matter claimed in the ’431 patent.

80. On information and belief, with knowledge of the ’431 patent, Defendant also contributes to the infringement of one or more claims of the ’431 patent in violation of 35 U.S.C. § 271(c), including claim 25, by making, using, offering to sell or selling and/or importing a patented component or material constituting a material part of the invention, including at least the Accused Products, knowing the same to be especially made or especially adapted for use in an infringement and not a staple article or commodity of commerce suitable for substantial non-infringing use. This is evidenced by, among other things, the design, configuration, and functionality of Defendant’s Accused Products, which are especially made or especially adapted for use in an infringement of the ’431 patent when used for their normal and intended purpose. This is also evidenced by, among other things, Defendant’s informational and promotional materials described above, which describe the normal use and intended purpose of the Accused Products and demonstrate that the Accused Products are especially made or especially adapted for a use that infringes the ’431 patent.

81. As a result of Defendant’s inducement of, and/or contribution to, infringement, its customers and/or end users made, used, sold, or offered for sale, and continue to make, use, sell, or offer to sell Defendant’s products, including the Accused Products, in ways that directly infringe one or more claims of the ’431 patent, including claim 25. On information and belief, Defendant had actual knowledge of its customers’ and/or end users’ direct infringement at least by virtue of its sales, instruction, and/or otherwise promotion of Defendant’s products, including the Accused

Products, at least as of March 2017 when Orckit IP initiated discussions with Defendant about its patent portfolio, including the Asserted Patents, and no later than the filing of this Complaint.

82. On information and belief, with knowledge of the ’431 patent, Defendant has willfully, deliberately, and intentionally infringed the ’431 patent, and continues to willfully, deliberately, and intentionally infringe the ’431 patent. On information and belief, Defendant had actual knowledge of the ’431 patent and Defendant’s infringement of the ’431 patent as set forth above. On information and belief, after acquiring that knowledge, Defendant directly and indirectly infringed the ’431 patent as set forth above. On information and belief, Defendant knew or should have known that its conduct amounted to infringement of the ’431 patent at least because Plaintiffs notified Defendant of the ’431 patent and its infringement of the ’431 patent as set forth above.

83. On information and belief, Defendant will continue to infringe the ’431 patent unless and until it is enjoined by this Court. Defendant, by way of its infringing activities, has caused and continues to cause Plaintiff to suffer damages in an amount to be determined, and has caused and is causing Plaintiff irreparable harm. Plaintiff has no adequate remedy at law against Defendant’s acts of infringement and, unless it is enjoined from its infringement of the ’431 patent, Plaintiff will continue to suffer irreparable harm.

84. Plaintiff is entitled to recover from Defendant damages at least in an amount adequate to compensate for its infringement of the ’431 patent, which amount has yet to be determined, together with interest and costs fixed by the Court.

85. Plaintiff has complied with 35 U.S.C. § 287 with respect to the ’431 patent.

COUNT IV – INFRINGEMENT OF U.S. PATENT NO. 7,593,400

86. Plaintiff incorporates by reference the allegations contained in paragraphs 1–85.

87. Defendant has made, used, offered for sale, sold, and/or imported products,

including at least the Accused Products, that infringe, either literally or under the doctrine of equivalents, one or more claims of the ’400 patent in violation of 35 U.S.C. § 271(a), including claim 1. A comparison of claim 1 of the ’400 patent to the Accused Products is attached as Exhibit 9, which is incorporated herein by reference.

88. On information and belief, with knowledge of the ’400 patent, Defendant has actively induced and continues to induce the direct infringement of one or more claims of the ’400 patent, including claim 1, in violation of 35 U.S.C. § 271(b) by its customers and/or end users of their products, including at least the Accused Products, by selling, providing support for, providing instructions for use of, and/or otherwise encouraging its customers and/or end-users to directly infringe, either literally and/or under the doctrine of equivalents, one or more claims of the ’400 patent, including claim 1, with the intent to encourage those customers and/or end-users to infringe the ’400 patent.

89. By way of example, on information and belief, Defendant actively induces infringement of the ’400 patent by encouraging, instructing, and aiding one or more persons in the United States, including but not limited to customers and end users who purchase, test, operate, and use Defendant’s products, including at least the Accused Products, to make, use, sell, and/or offer to sell Defendant’s products, including at least the Accused Products, in a manner that infringes at least one claim of the ’400 patent, including claim 1. For example, as described above, Defendant actively markets, advertises, offers for sale, and/or otherwise promotes its Accused Products on its website. Defendant further actively markets, advertises, offers for sale, and/or otherwise promotes its Accused Products by publishing and distributing data sheets, manuals, and guides for the Accused Products. Therein, Defendant describes and touts the use of the subject matter claimed in the ’400 patent.

90. On information and belief, with knowledge of the ’400 patent, Defendant also contributes to the infringement of one or more claims of the ’400 patent in violation of 35 U.S.C. § 271(c), including claim 1, by making, using, offering to sell or selling and/or importing a patented component or material constituting a material part of the invention, including at least the Accused Products, knowing the same to be especially made or especially adapted for use in an infringement and not a staple article or commodity of commerce suitable for substantial non-infringing use. This is evidenced by, among other things, the design, configuration, and functionality of Defendant’s Accused Products, which are especially made or especially adapted for use in an infringement of the ’400 patent when used for their normal and intended purpose. This is also evidenced by, among other things, Defendant’s informational and promotional materials described above, which describe the normal use and intended purpose of the Accused Products and demonstrate that the Accused Products are especially made or especially adapted for a use that infringes the ’400 patent.

91. As a result of Defendant’s inducement of, and/or contribution to, infringement, its customers and/or end users made, used, sold, or offered for sale, and continue to make, use, sell, or offer to sell Defendant’s products, including the Accused Products, in ways that directly infringe one or more claims of the ’400 patent, including claim 1. On information and belief, Defendant had actual knowledge of its customers’ and/or end users’ direct infringement at least by virtue of its sales, instruction, and/or otherwise promotion of Defendant’s products, including the Accused Products, at least as of March 2017 when Orckit IP initiated discussions with Defendant about its patent portfolio, including the Asserted Patents, and no later than the filing of this Complaint.

92. On information and belief, with knowledge of the ’400 patent, Defendant has willfully, deliberately, and intentionally infringed the ’400 patent, and continues to willfully,

deliberately, and intentionally infringe the ’400 patent. On information and belief, Defendant had actual knowledge of the ’400 patent and Defendant’s infringement of the ’400 patent as set forth above. On information and belief, after acquiring that knowledge, Defendant directly and indirectly infringed the ’400 patent as set forth above. On information and belief, Defendant knew or should have known that its conduct amounted to infringement of the ’400 patent at least because Plaintiffs notified Defendant of the ’400 patent and its infringement of the ’400 patent as set forth above.

93. On information and belief, Defendant will continue to infringe the ’400 patent unless and until it is enjoined by this Court. Defendant, by way of its infringing activities, has caused and continues to cause Plaintiff to suffer damages in an amount to be determined, and has caused and is causing Plaintiff irreparable harm. Plaintiff has no adequate remedy at law against Defendant’s acts of infringement and, unless it is enjoined from its infringement of the ’400 patent, Plaintiff will continue to suffer irreparable harm.

94. Plaintiff is entitled to recover from Defendant damages at least in an amount adequate to compensate for its infringement of the ’400 patent, which amount has yet to be determined, together with interest and costs fixed by the Court.

95. Plaintiff has complied with 35 U.S.C. § 287 with respect to the ’400 patent.

COUNT V – INFRINGEMENT OF U.S. PATENT NO. 9,118,602

96. Plaintiff incorporates by reference the allegations contained in paragraphs 1–95.

97. Defendant has made, used, offered for sale, sold, and/or imported products, including at least the Accused Products, that infringe, either literally or under the doctrine of equivalents, one or more claims of the ’602 patent in violation of 35 U.S.C. § 271(a), including claim 1. A comparison of claim 1 of the ’602 patent to the Accused Products is attached as Exhibit 10, which is incorporated herein by reference.

98. On information and belief, with knowledge of the ’602 patent, Defendant has actively induced and continues to induce the direct infringement of one or more claims of the ’602 patent, including claim 1, in violation of 35 U.S.C. § 271(b) by its customers and/or end users of their products, including at least the Accused Products, by selling, providing support for, providing instructions for use of, and/or otherwise encouraging its customers and/or end-users to directly infringe, either literally and/or under the doctrine of equivalents, one or more claims of the ’602 patent, including claim 1, with the intent to encourage those customers and/or end-users to infringe the ’602 patent.

99. By way of example, on information and belief, Defendant actively induces infringement of the ’602 patent by encouraging, instructing, and aiding one or more persons in the United States, including but not limited to customers and end users who purchase, test, operate, and use Defendant’s products, including at least the Accused Products, to make, use, sell, and/or offer to sell Defendant’s products, including at least the Accused Products, in a manner that infringes at least one claim of the ’602 patent, including claim 1. For example, as described above, Defendant actively markets, advertises, offers for sale, and/or otherwise promotes its Accused Products on its website. Defendant further actively markets, advertises, offers for sale, and/or otherwise promotes its Accused Products by publishing and distributing data sheets, manuals, and guides for the Accused Products. Therein, Defendant describes and touts the use of the subject matter claimed in the ’602 patent.

100. On information and belief, with knowledge of the ’602 patent, Defendant also contributes to the infringement of one or more claims of the ’602 patent in violation of 35 U.S.C. § 271(c), including claim 1, by making, using, offering to sell or selling and/or importing a patented component or material constituting a material part of the invention, including at least the

Accused Products, knowing the same to be especially made or especially adapted for use in an infringement and not a staple article or commodity of commerce suitable for substantial non-infringing use. This is evidenced by, among other things, the design, configuration, and functionality of Defendant's Accused Products, which are especially made or especially adapted for use in an infringement of the '602 patent when used for their normal and intended purpose. This is also evidenced by, among other things, Defendant's informational and promotional materials described above, which describe the normal use and intended purpose of the Accused Products and demonstrate that the Accused Products are especially made or especially adapted for a use that infringes the '602 patent.

101. As a result of Defendant's inducement of, and/or contribution to, infringement, its customers and/or end users made, used, sold, or offered for sale, and continue to make, use, sell, or offer to sell Defendant's products, including the Accused Products, in ways that directly infringe one or more claims of the '602 patent, including claim 1. On information and belief, Defendant had actual knowledge of its customers' and/or end users' direct infringement at least by virtue of its sales, instruction, and/or otherwise promotion of Defendant's products, including the Accused Products, at least as of March 2017 when Orckit IP initiated discussions with Defendant about its patent portfolio, including the Asserted Patents, and no later than the filing of this Complaint.

102. On information and belief, with knowledge of the '602 patent, Defendant has willfully, deliberately, and intentionally infringed the '602 patent, and continues to willfully, deliberately, and intentionally infringe the '602 patent. On information and belief, Defendant had actual knowledge of the '602 patent and Defendant's infringement of the '602 patent as set forth above. On information and belief, after acquiring that knowledge, Defendant directly and indirectly infringed the '602 patent as set forth above. On information and belief, Defendant knew

or should have known that its conduct amounted to infringement of the ’602 patent at least because Plaintiffs notified Defendant of the ’602 patent and its infringement of the ’602 patent as set forth above.

103. On information and belief, Defendant will continue to infringe the ’602 patent unless and until it is enjoined by this Court. Defendant, by way of its infringing activities, has caused and continues to cause Plaintiff to suffer damages in an amount to be determined, and has caused and is causing Plaintiff irreparable harm. Plaintiff has no adequate remedy at law against Defendant’s acts of infringement and, unless it is enjoined from its infringement of the ’602 patent, Plaintiff will continue to suffer irreparable harm.

104. Plaintiff is entitled to recover from Defendant damages at least in an amount adequate to compensate for its infringement of the ’602 patent, which amount has yet to be determined, together with interest and costs fixed by the Court.

105. Plaintiff has complied with 35 U.S.C. § 287 with respect to the ’602 patent.

JURY DEMAND

Pursuant to Rule 38 of the Federal Rules of Civil Procedure, Plaintiff demands a trial by jury on all issues triable as such.

PRAYER FOR RELIEF

WHEREFORE, Plaintiff Corrigent Corporation requests that the Court enter judgment for Plaintiff and against Defendant Cisco Systems, Inc. and enter the following relief:

A. A judgment that Defendant infringes the following, Asserted Patents:

U.S. Patent No. 6,957,369 (Exhibit 1, “’369 patent”)
U.S. Patent No. 7,113,485 (Exhibit 2, “’485 patent”)
U.S. Patent No. 7,330,431 (Exhibit 3, “’431 patent”)
U.S. Patent No. 7,593,400 (Exhibit 4, “’400 patent”)
U.S. Patent No. 9,118,602 (Exhibit 5, “’602 patent”)

B. A permanent injunction restraining and enjoining Defendant, its officers, partners, agents, servants, employees, parents, subsidiaries, divisions, affiliate corporations, joint ventures, other related business entities and all other persons acting in concert, participation, or in privity with them, and their successors and assigns, from infringing the Asserted Patents;

C. An award of damages to Plaintiff arising from Defendant's past and continuing infringement up until the date Defendant is finally and permanently enjoined from further infringement, including compensatory damages;

D. A determination that Defendant's infringement of the Asserted Patents has been willful, and an award of treble damages to Plaintiff pursuant to 35 U.S.C. § 284;

E. A determination that this is an exceptional case and awarding Plaintiff's attorneys' fees pursuant to 35 U.S.C. § 285;

F. An order awarding Plaintiff costs and expenses in this action;

G. An order awarding Plaintiff pre- and post-judgment interest on its damages; and

H. An award to Plaintiff of such further relief at law or in equity as the Court deems just and proper.

Dated: April 19, 2022

Respectfully submitted,

By: */s/ Charles Ainsworth*

Charles Ainsworth
State Bar No. 00783521
Robert Christopher Bunt
State Bar No. 00787165
PARKER, BUNT & AINSWORTH, P.C.
100 E. Ferguson, Suite 418
Tyler, TX 75702
(903) 531-3535
E-mail: charley@pbatyler.com
E-mail: rcbunt@pbatyler.com

James R. Nuttall (IL 6243585) *PHV pending*
Robert F. Kappers (IL 6313187) *PHV pending*
STEPTOE & JOHNSON LLP
227 West Monroe Street, Suite 4700
Chicago, IL 60606
(312) 577-1300
E-mail: jnuttall@steptoe.com
E-mail: rkappers@steptoe.com

Thomas C. Yebernetsky (DC 219497) *PHV pending*
STEPTOE & JOHNSON LLP
1330 Connecticut Avenue, NW
Washington, DC 20036
(202) 429-8003
E-mail: tyebernetsky@steptoe.com

Attorneys for Plaintiff Corrigent Corporation