US010952930B2

(12) **United States Patent**
Rees et al.

(10) **Patent No.: US 10,952,930 B2**
(45) **Date of Patent: *Mar. 23, 2021**

(54) **BABY BOTTLE WITH FLEXIBLE NIPPLE REGIONS**

(71) Applicant: **Mayborn (UK) Limited**, New Castle Upon Tyne (GB)

(72) Inventors: **Arnold Rees**, Newcastle Upon Tyne (GB); **Ian Webb**, London (GB); **Mark Armstrong**, Wales (GB); **Tom Cotton**, London (GB)

(73) Assignee: **Maybom (UK) Limited**, New Castle Upon Tyne (GB)

(*) Notice: Subject to any disclaimer, the term of this patent is extended or adjusted under 35 U.S.C. 154(b) by 0 days.

This patent is subject to a terminal disclaimer.

(21) Appl. No.: **14/551,783**

(22) Filed: **Nov. 24, 2014**

(65) **Prior Publication Data**

US 2015/0083685 A1 Mar. 26, 2015

Related U.S. Application Data

(63) Continuation of application No. 13/364,557, filed on Feb. 2, 2012, now Pat. No. 8,910,810, which is a (Continued)

(30) **Foreign Application Priority Data**

Jun. 29, 2004 (GB) 2004/14560.3
Feb. 8, 2005 (GB) 2005/02599.4

(51) **Int. Cl.**
A61J 11/04 (2006.01)
A61J 11/02 (2006.01)
(Continued)

(52) **U.S. Cl.**
CPC ***A61J 11/006*** (2013.01); ***A61J 11/02*** (2013.01); ***A61J 11/045*** (2013.01); *A61J 17/001* (2015.05)

(58) **Field of Classification Search**
CPC ... A61J 11/04; A61J 9/00; A61J 11/002; A61J 11/0035; A61J 11/005; A61J 11/006;
(Continued)

(56) **References Cited**

U.S. PATENT DOCUMENTS

380,835 A * 4/1888 Ware A61J 9/04 215/11.5
1,510,571 A * 10/1924 Ware A61J 11/02 215/11.5
(Continued)

FOREIGN PATENT DOCUMENTS

DE 19716535 A1 11/1997
DE 19849271 A1 4/2000
(Continued)

OTHER PUBLICATIONS

International Search Report for PCT/GB05/00183 dated Aug. 11, 2005.
(Continued)

Primary Examiner — Andrew T Kirsch
(74) *Attorney, Agent, or Firm* — Fish & Richardson P.C.

(57) **ABSTRACT**

According to a first embodiment, a feeding bottle comprises a vessel, collar, and nipple. The nipple comprises a base portion, a teat portion, an areola portion allowing movement of the teat portion towards and away from the base portion. According to a second embodiment, a feeding bottle comprises a vessel, collar, nipple and handle portion removeably secured to the vessel by the collar. The invention includes a flexible region or regions to provide a more natural feeding by closely mimicking the human breast.

20 Claims, 6 Drawing Sheets

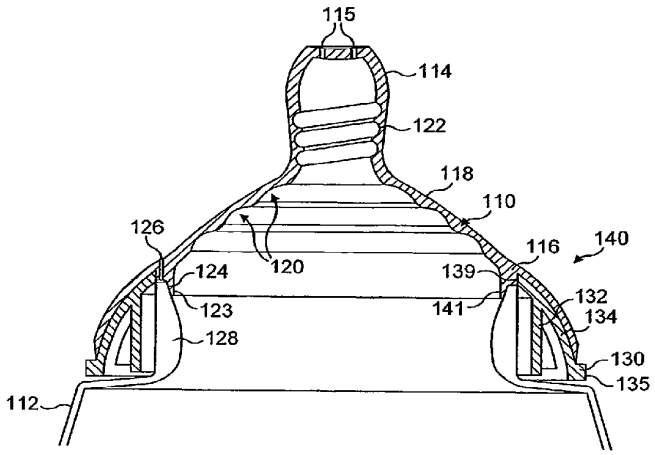

Related U.S. Application Data

continuation of application No. 11/630,864, filed as application No. PCT/GB2005/002532 on Jun. 29, 2005, now Pat. No. 8,181,800.

(51) **Int. Cl.**
A61J 11/00 (2006.01)
A61J 17/00 (2006.01)

(58) **Field of Classification Search**
CPC . A61J 9/04; A61J 11/02; A61J 11/045; A47G 19/2272
USPC 215/11.5, 11.1, 396, 398, 11.6, 276, 11.4
See application file for complete search history.

(56) **References Cited**

U.S. PATENT DOCUMENTS

1,672,734 A * 6/1928 Reilly A61J 11/00 215/11.1
2,517,457 A 8/1950 Allen
2,588,069 A 3/1952 Allen
2,688,326 A * 9/1954 Lerman A61J 11/0015 215/11.1
2,956,702 A 10/1960 Ransom
3,097,757 A 7/1963 Searer
3,493,139 A 2/1970 Faddoul et al.
3,704,803 A 12/1972 Ponder
3,946,888 A 3/1976 Tonkin
3,990,596 A 11/1976 Hoftman
4,834,099 A 5/1989 Schrooten
4,999,568 A 2/1991 Morifuji et al.
5,101,991 A 4/1992 Morifuji et al.
5,474,028 A 12/1995 Larson et al.
5,544,766 A 8/1996 Dunn et al.
D384,748 S 10/1997 Dunn
5,673,806 A 10/1997 Busnel
5,678,710 A 10/1997 Sheu
5,706,973 A 1/1998 Robbins et al.
5,784,999 A 7/1998 Larson et al.
D404,138 S 1/1999 Meyers et al.
5,862,927 A * 1/1999 Tebeau A61J 9/00 215/11.1
D405,530 S 2/1999 Manganiello et al.
5,881,893 A 3/1999 Manganiello
D412,582 S 8/1999 Morano
6,003,698 A 12/1999 Morano
D421,306 S 2/2000 Meyers et al.
6,032,810 A 3/2000 Meyers et al.
D425,994 S 5/2000 Hakim
6,161,710 A 12/2000 Dieringer
D441,870 S 5/2001 Randolph
D444,239 S 6/2001 Kobayashi et al.
6,241,110 B1 6/2001 Hakim
6,270,519 B1 8/2001 Botts
6,321,931 B1 11/2001 Hakim et al.
D454,642 S 3/2002 Hakim
6,357,620 B1 3/2002 Hakim
D459,815 S 7/2002 Pastucha
6,422,415 B1 7/2002 Manganiello
D463,567 S 9/2002 Morano
D464,434 S 10/2002 Morano
D465,028 S 10/2002 Renz
D479,606 S 9/2003 Randolph
6,645,228 B2 11/2003 Renz
D486,579 S 2/2004 Dunn
D488,560 S 4/2004 Renz et al.
6,745,912 B2 6/2004 Uehara et al.
D498,849 S 11/2004 Randolph et al.
6,883,672 B2 4/2005 Dunn et al.
D504,723 S 5/2005 Randolph et al.
D504,724 S 5/2005 Randolph et al.
D504,725 S 5/2005 Randolph et al.
6,959,827 B2 * 11/2005 Morano A47G 19/2272 215/11.1
6,981,962 B1 1/2006 Lenkersdorf
6,984,688 B2 1/2006 Gu
6,994,225 B2 2/2006 Hakim
D520,142 S 5/2006 Mallet
7,108,676 B2 9/2006 Loging
7,122,045 B2 10/2006 Randolph et al.
7,134,564 B2 * 11/2006 Verbovszky A61J 11/0015 215/11.4
7,150,370 B2 12/2006 Pyun
7,185,775 B1 3/2007 Decal
D539,910 S 4/2007 Ordonez
7,204,386 B2 4/2007 Hakim
7,210,591 B2 5/2007 Goldman et al.
D547,874 S 7/2007 Horie et al.
7,243,814 B2 7/2007 Hakim
7,252,676 B1 8/2007 Williams
7,320,678 B2 1/2008 Ruth et al.
7,395,941 B2 7/2008 Hong
7,481,324 B2 1/2009 Almonte
D599,028 S 8/2009 Schofield
D620,125 S 7/2010 Rees et al.
D626,246 S 10/2010 Rees et al.
7,828,821 B2 11/2010 Renz
8,708,174 B2 * 4/2014 Itzek A61J 11/02 215/11.1
2002/0030029 A1 3/2002 Hakim
2002/0063103 A1 5/2002 Kiernan
2003/0032984 A1 2/2003 Hakim
2003/0089676 A1 * 5/2003 Uehara A61J 11/006 215/11.1
2003/0093120 A1 5/2003 Renz
2003/0106872 A1 6/2003 Lin
2004/0026351 A1 2/2004 Dunn et al.
2004/0124168 A1 7/2004 Silver
2004/0188373 A1 9/2004 Lewis et al.
2004/0226906 A1 11/2004 Peterson
2004/0256345 A1 12/2004 Lundquist
2005/0035078 A1 2/2005 Lieberman et al.
2005/0056611 A1 3/2005 Hakim
2005/0184022 A1 8/2005 Dunn et al.
2005/0224444 A1 10/2005 Akihiro
2005/0247658 A1 11/2005 Renz
2005/0247719 A1 11/2005 Loging
2005/0252875 A1 11/2005 Sheu et al.
2005/0258123 A1 11/2005 Silver
2005/0277987 A1 12/2005 Randolph et al.
2005/0288712 A9 12/2005 Hakim
2006/0011571 A1 1/2006 Silver
2007/0021782 A1 1/2007 Inoue et al.
2007/0045214 A1 3/2007 Jennings
2007/0095778 A1 5/2007 Catton
2007/0102388 A1 5/2007 Lewis et al.
2007/0131637 A1 6/2007 Tamura et al.
2007/0138121 A1 6/2007 Stribling et al.
2007/0138709 A1 6/2007 Sabree et al.
2007/0163983 A1 7/2007 Hsu
2007/0187419 A1 8/2007 Hakim
2007/0221604 A1 9/2007 Hakim
2007/0272645 A1 11/2007 Ito et al.
2007/0278172 A1 12/2007 Hakim
2007/0283666 A1 12/2007 Py et al.
2008/0128379 A1 6/2008 Hen
2008/0173654 A1 7/2008 Hakim
2008/0188894 A1 8/2008 Hakim
2008/0210655 A1 9/2008 Rees et al.
2008/0314776 A1 12/2008 Cooke
2009/0005811 A1 1/2009 DuChesne et al.
2009/0039046 A1 2/2009 Gunter et al.

FOREIGN PATENT DOCUMENTS

DE 20210121 U 10/2002
EP 0151862 A1 8/1985
EP 0845971 10/2001
EP 1297814 A 4/2003
EP 1310230 A2 5/2003
GB 0004210 A 6/1912
GB 2139903 A 11/1984
GB 2154451 A1 9/1985

(56) **References Cited**

FOREIGN PATENT DOCUMENTS

GB	2167735	A	6/1986
GB	2250017	A	5/1992
GB	2351729	A	1/2001
GB	2402347	A	12/2004
GB	2412114	A	9/2005
JP	01313056	A	12/1989
JP	02144065	A	6/1990
JP	05084279	A	4/1993
JP	05115535	A	5/1993
JP	2000000288	A	1/2000
JP	2000135270	A1	5/2000
JP	2000189496	A	7/2000
JP	2000271193	A	10/2000
JP	2001009008	A	1/2001
JP	2001187117	A	7/2001
JP	2001299878	A	10/2001
JP	20001299877	A	10/2001
JP	2002011076	A	1/2002
JP	2002200144	A	7/2002
JP	2003144529	A	5/2003
JP	2003205018	A	7/2003
JP	2002306572	A	10/2003
JP	2004129940	A	4/2004
JP	20066006809	A	1/2006
JP	2006068360	A	3/2006
WO	WO 9825571	A	6/1999
WO	WO 00/54726	A	9/2000
WO	WO 2003092577	A	11/2003
WO	WO 2004039304	A	5/2004
WO	WO 2004043325	A	5/2004
WO	WO 2004064578	A1	8/2004
WO	WO 2004065247	A1	8/2004
WO	WO 2005041851	A	5/2005
WO	WO 2006011573	A	2/2006

OTHER PUBLICATIONS

Search Report for GB0410993.0 dated May 19, 2005.
International Search Report for PCT/GB05/002532 dated Dec. 7, 2005.
Search Report for GB0414560.3 dated Mar. 4, 2005.
Search Report for GB0502599.4 dated May 6, 2005.
IP India Examination Report for 5762/DELNP/2011 which is a foreign counterpart application for U.S. Appl. No. 14/551,783; dated Feb. 3, 2018; 4 pages.

* cited by examiner

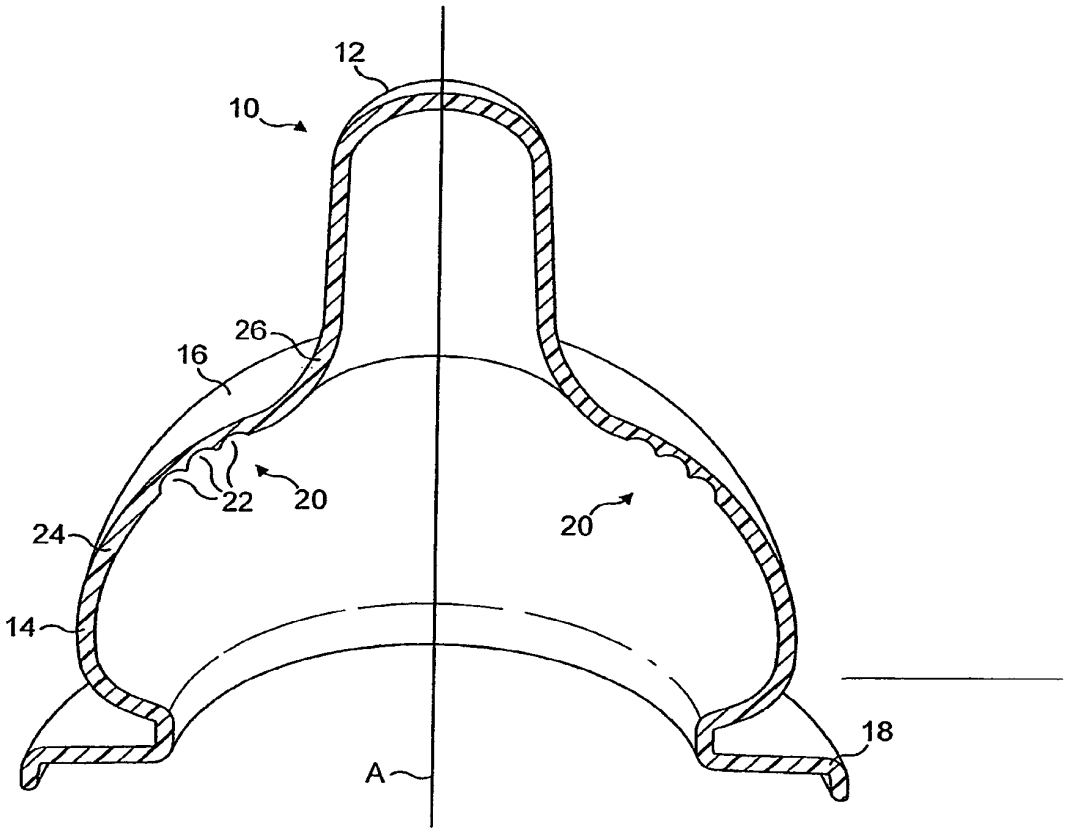

FIG. 1

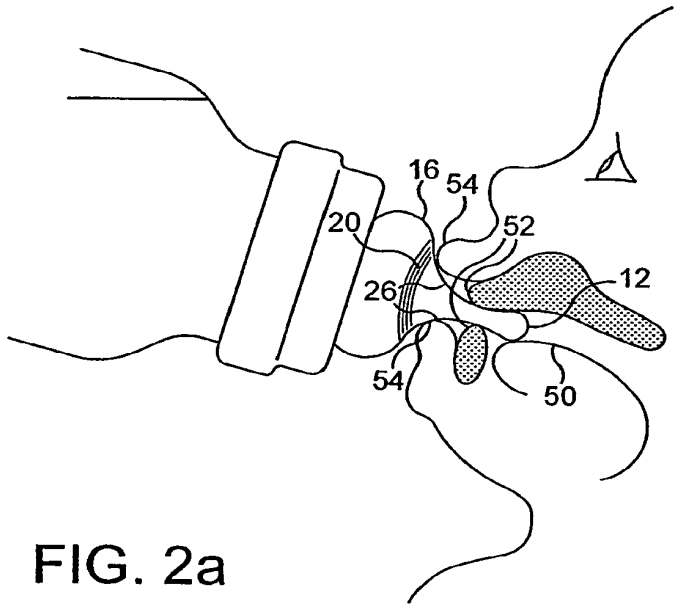

FIG. 2a

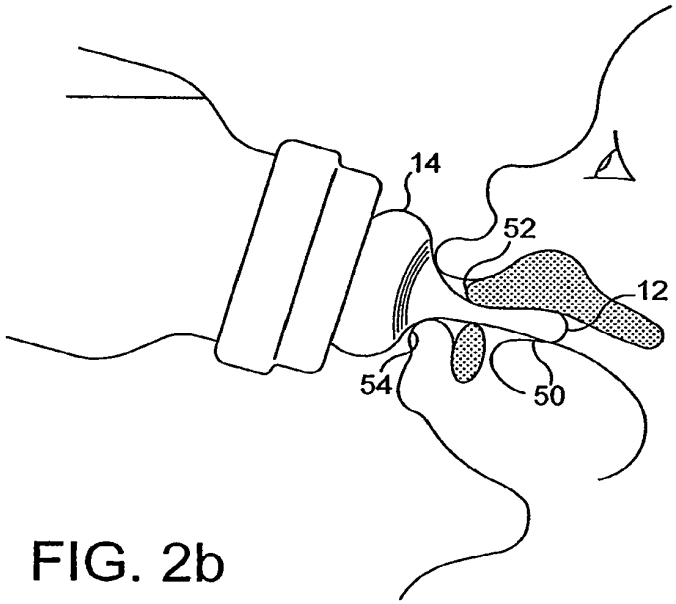

FIG. 2b

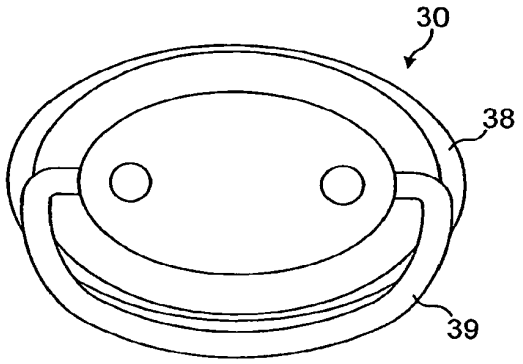

FIG. 3a

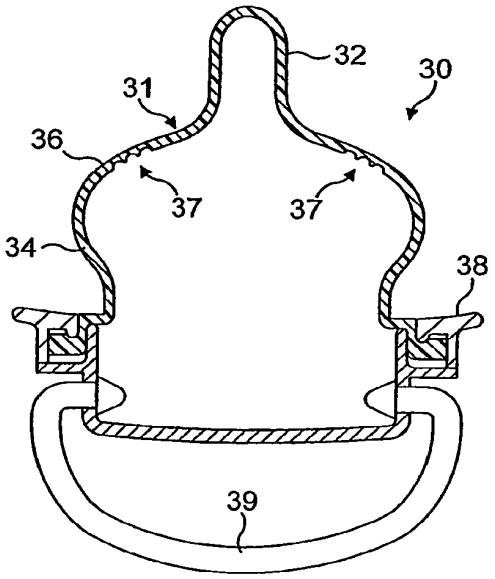

FIG. 3b

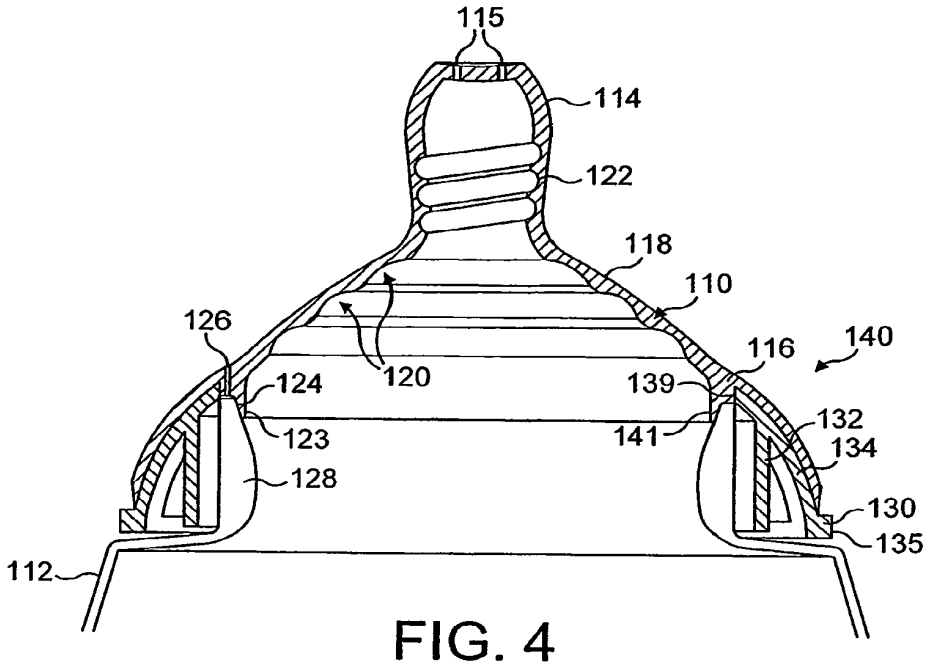

FIG. 4

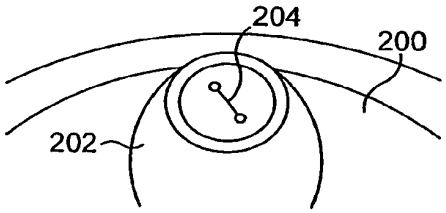

FIG. 5a

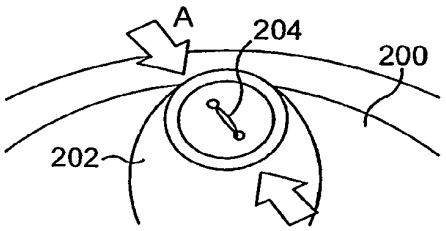

FIG. 5b

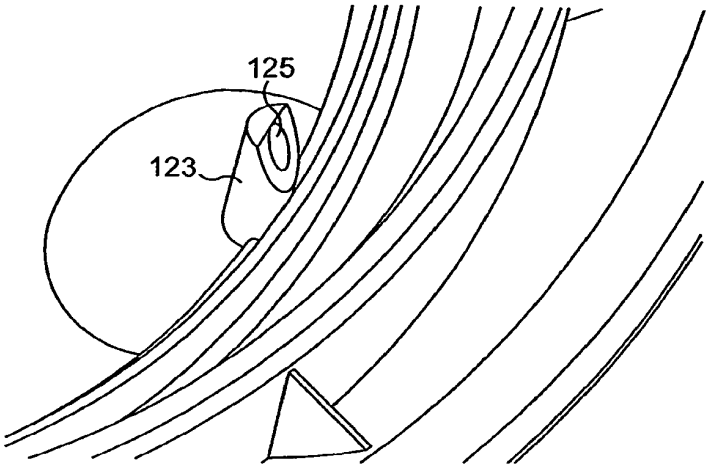

FIG. 6

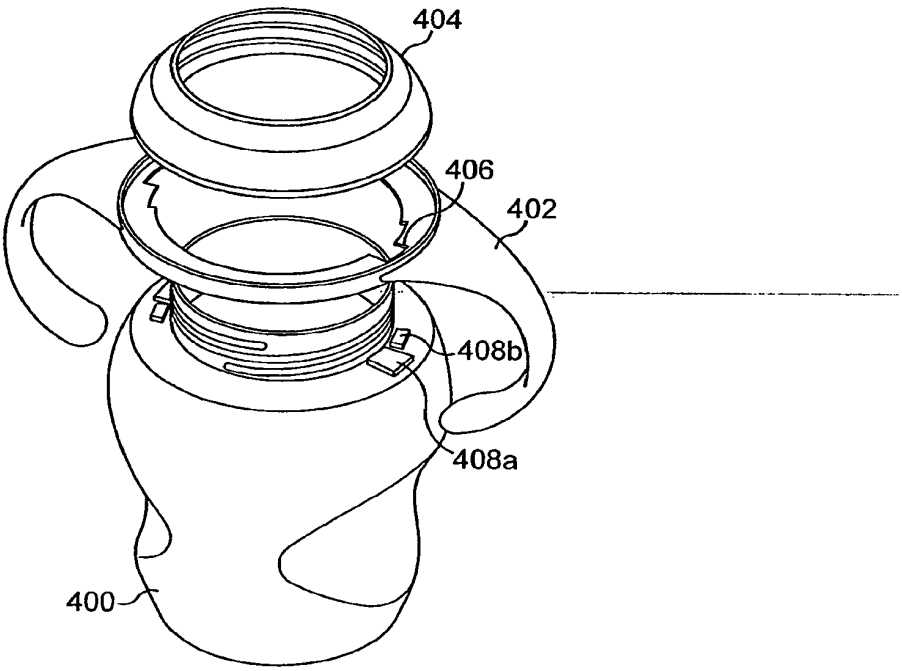

FIG. 7a

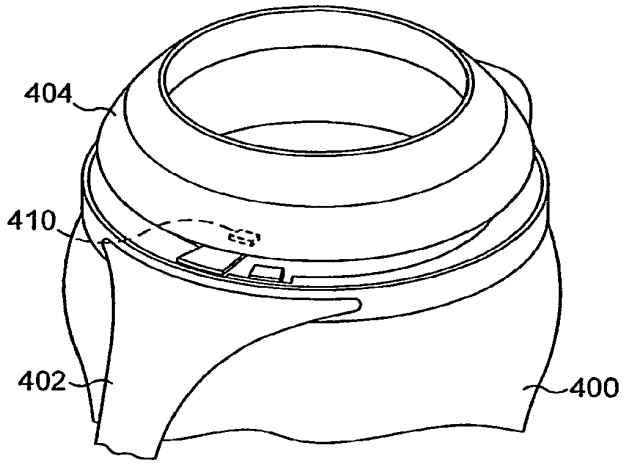

FIG. 7b

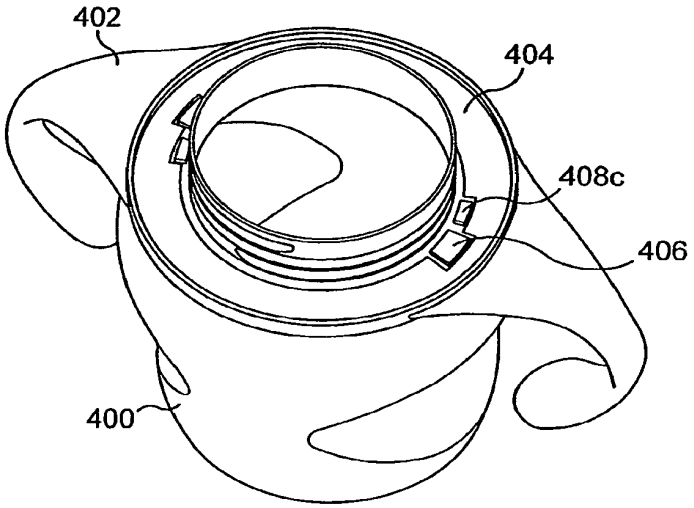

FIG. 7c

BABY BOTTLE WITH FLEXIBLE NIPPLE REGIONS

CROSS-REFERENCE TO RELATED APPLICATIONS

This application is a continuation of pending U.S. application Ser. No. 13/364,557 filed on Feb. 2, 2012, which was a continuation of U.S. application Ser. No. 11/630,864 which was a national filing under § 371 of International Application PCT/GB2005/002532, with an international filing date of Jun. 29, 2005, claiming priority from Great Britain Application No. GB2004/14560.3, with a filing date of Jun. 29, 2004, now abandoned, and Great Britain Application No. GB2005/02599.4, with a filing date of Feb. 8, 2005, now abandoned, all of which are herein incorporated by reference.

TECHNICAL FIELD

The invention relates to a drinking vessel with a nipple, in particular a baby bottle having a nipple of increased flexibility and functionality.

BACKGROUND OF THE INVENTION

Various known teats have been designed to mimic the human breast in operation. One known teat is described in U.S. Pat. No. 6,645,228 and includes a stem and a base. The base has a bulbous region and an areola region from which the stem projects. The bulbous region has an upper region with a progressively thinning wall which acts as a spring element such that as an infant sucks on the teat the areola and stem move back and forth relative to the bulbous region.

Various problems arise with this arrangement. Movement of the areola region and stem relative to the bulbous region does not closely mimic the movement of the human breast during sucking. Furthermore because flexibility is provided upon a progressively thinning wall region, the amount of flexing and the point at which flexing takes place is undefined and unpredictable.

A second known teat is described in U.S. Pat. No. 6,745,912 B2 (Pigeon) including a series of parallel annular grooves on the inner surface of the nipple which allows stretching of the nipple but only in a constrained direction, and with the risk of flow blockage if the nipple collapses.

In addition, efforts are continuing to provide valved feeding bottles, in particular to allow air ingress to the teat. It is believed that this reduces the risk of colic which can otherwise occur as a result of negative pressure building up in the feeding bottle. Various known arrangements include slit valves of various types, however these are frail and difficult to machine. In another approach described in German patent DE19716535 a teat is provided with an inner annular resilient flange at its base which rests on a bottle rim when screwed down by a collar. Upon a negative pressure building up inside the drinking vessel the flange lifts from the vessel rim and air passes up through the collar and between the flange and the vessel rim.

In a similar arrangement described in European patent application EP151862 a teat includes a downwardly depending cylindrical flange at its base which seals against the inner top face of a vessel neck when deformed by being screwed down by a collar. Again a negative pressure inside the vessel lifts the flange away from the vessel neck so that air flows through the collar and between the neck and the flange into the vessel to relieve the pressure differential. Such arrangements rely on the correct amount of screw pressure being applied by the user on fixing the teat which can give rise to varied levels of valving between uses. Furthermore the introduction of a circumferential flange increases material costs.

SUMMARY OF THE INVENTION

The invention is set out in the claims. According to a first embodiment, because the flex region is provided in the areola portion allowing the teat portion and/or areola portion to move towards and away from one another a more natural feeding action is provided. Furthermore, because of the inclusion of a plurality of flex channels the point of flexure is clearly defined. According to a second embodiment, because of the provision of a helical flow formation on the inner face of the teat, continuous flow of liquid is allowed even when the teat collapses via the helical flow path while allowing extension of the teat and in particular a rotational or torsional extension. It will be understood that each of the terms "teat" and "nipple" embraces feeding bottle teats and nipples as well as soother teats and nipples, sometimes known as "baglets".

Embodiments of the invention will now be described by way of example with reference to the drawings.

BRIEF DESCRIPTION OF THE DRAWINGS

FIG. **1** is a cross-sectional side view of a teat according to the present invention;

FIG. **2***a* is a side view of the teat of FIG. **1** in use in a first flexed position;

FIG. **2***b* is a side view of the teat of FIG. **1** in use in a second flexed position;

FIGS. **3***a* and **3***b* are end and side views respectively of a soother incorporating the teat of the present invention;

FIG. **4** is a cross-sectional side view of a teat and vessel according to another aspect of the present invention;

FIG. **5***a* is a perspective view showing a teat valve in a first, closed configuration;

FIG. **5***b* is a perspective view showing a teat valve in a second, open configuration;

FIG. **6** is a partial perspective view of the underside of the teat, showing a lip valve;

FIG. **7***a* is an exploded perspective view showing assembly steps for a drinking vessel according to the invention;

FIG. **7***b* is a perspective view showing a first detail of an assembled vessel according to the present invention; and

FIG. **7***c* is a perspective view showing a second detail of an assembled vessel according to the present invention.

DETAILED DESCRIPTION OF THE INVENTION

Referring firstly to FIG. **1** a teat **10** for use with a feeding bottle includes a teat portion **12**, a base portion **14** and an areola portion **16** therebetween. A flange **18** extends from the base of the base portion to allow fixing to a feeding bottle (not shown) in any appropriate known manner. The base portion may also include a one-way air-inlet valve of any appropriate type for example an integrally moulded duckbill valve (not shown). The teat has circular symmetry around an axis A running through the center of the teat.

The areola portion **16** includes a flex region **20** comprising three grooves or flex channels **22** extending around an inner surface of the areola portion effectively forming circular thinned regions parallel/concentric with each other

about the axis A and hence surrounding the teat portion. The flex region **20** is generally provided between a transition region **24** separating the base portion **14** and the areola portion **16** and a transition region **26** separating the areola portion **16** and the teat portion **12**. The flex region **20** allows flexing of the teat as described in more detail below.

The teat can be formed in any appropriate manner, for example compression or injection moulding and formed of any appropriate elastic material such as silicone, latex or thermoplastic elastomer (TPE). Injection moulded silicone provides a particularly desirable degree of elasticity in the teat portion. The teat portion **12** is preferably thinner in cross-section than the remainder of the teat or is co-moulded with a more flexible material to allow additional flexing of the teat portion relative to the teat as a whole. The teat can have a texture such as a skin-like texture moulded or otherwise patterned on to its surface.

As shown in FIGS. **2***a* and **2***b*, in operation an infant drinks from the teat mounted on a bottle, the infant's tongue **50** contacting the teat portion **12**, the infant's teeth or gums **52** contacting the transition portion **26** and the infant's lips **54** contacting the areola portion **16** generally at the flex region **20**. As a result, as the infant sucks on the teat, the teat portion and areola portion flex towards and away from one another by virtue of respective collapsing and extending of the flex region around the flexed channels **22**. In particular, as can be seen in FIG. **2***a*, reduced suction on the teat portion **12** towards the base portion **14** relaxes the flexible reduced suction whereas, as shown in FIG. **2***b*, suction on the teat portion **12** away from the base portion **14** collapses the flexible region **20** extending the teat portion and areola portion away from one another.

The back and forth motion of the teat portion **12** mimics very closely the natural movement of the human breast during suckling or sucking of the infant by effectively allowing the teat to move and stretch as skin moves and stretches. The grooves or channels further visually define an areola area and are placed at an area of the teat which is also a non-bite area. The flexible portion also provides a pumping action on liquid in the bottle as the teat portion oscillates or reciprocates back and forth.

FIGS. **3***a* and **3***b* show a soother **30** employing a teat or baglet **31** according to the first embodiment of the present invention. The teat **31** includes a teat portion **32**, a base portion **34** and an areola portion **36** therebetween. The teat **31** is generally hollow and is secured at the base portion **34** to a shield **38**, having a ring or handle **39**, with the areola portion **36** forming a non-bite portion of the teat **31**. A flex region **37**, is situated at the non-bite areola portion **36**, and comprises grooves or channels extending around the inner surface of the teat **31** at the areola portion **36**. As an infant sucks on the teat **31**, the teat portion **32** flexes back and forth as a result of the respective collapsing and extending of the flex region **37** grooves. As before, this back and forth movement mimics the movement of a human breast during suckling, but with the flex region in a non-bite area.

Referring to FIG. **4**, it will be seen that according to another aspect a teat assembly **140** is mounted on an infant drinking vessel **112**. The teat assembly **140** includes a teat **110** having a teat portion **114** forming a nipple having drink apertures **115** at its upper end, a base portion **116** mountable to the drinking vessel and an areola region **118** therebetween. The teat **110** is textured and shaped to mimic the human breast and can, for example have skin-like texture varying between the teat portion, areola region and base portion, similar to the human breast. The teat can indeed be coloured to mirror human skin colour including ethnic skin colours. The shape of the teat is also similar to the human breast, the base portion **116** being shaped like a breast and having a wide, domed configuration. The areola portion **118** rises from the base portion **116** to the teat portion **114** at an angle to the horizontal, that is to say, with a component of inclination parallel to the teat portion **114**, allowing better pursing by the infant so that they can close their lips effectively around the teat, and again mimicking the human breast such that the experience of the infant is as similar as possible to the natural experience of breast feeding.

The teat **110** is formed from an elastomer with walls of decreasing thickness from the base portion **116** through to the teat **114** providing a more realistic flexing characteristic. The areola portion **118** further includes undulating grooves **120** forming, in cross-section, a wavy profile on the inner surface of the areola portion **118** and extending circumferentially. In the embodiments shown three such grooves are formed adjacent one another providing a bellows action as well as flexing in a direction perpendicular to the flow direction and increasing the flexibility especially in conjunction with the decreasing wall thickness providing a more natural stretching characteristic and sensory feedback to the infant. Yet further, the teat can be textured on its outer and/or inner surface to enhance operation or realism of the teat as appropriate.

The teat portion **114** projects generally perpendicular to the mouth of the vessel **112** and is elongate for example of length 20 mm, again to mimic the extension of the human nipple during breast feeding. The teat portion has a generally rectangular cross-section with wall thickness 1.8 mm and diameter 13 mm. A tight pitch helical groove **122** of groove depth 0.9 mm (half the wall thickness) having for example three turns and 3 mm pitch is moulded or otherwise formed around the inner cylindrical vertical surface of the teat portion **114** to form a flow passage even when the teat portion is collapsed, for example under biting pressure from an infant. In addition the helical groove allows rotational or torsional compression and extension of the teat portion in the range of 5-6 mm and flexing parallel perpendicular to the flow direction, again more closely mimicking the human breast.

At the tip of the teat portion the apertures **115** comprise a variable flow valve, where the flow can either be selected by choosing a teat with appropriate apertures or a two or three crossed slit configuration can be provided allowing the infant to regulate flow. For example referring to FIGS. **5***a* and **5***b*, a teat **200** includes a teat portion **202** with a slit valve **204**. As can be seen from FIG. **5***b* when pressure is applied in the longitudinal direction of the slit, for example bite pressure, the slit valve opens allowing fluid flow by application of compression and distortion pressure.

The teat assembly **140** is formed in a two-shot moulding process with elastomer forming the teat **110** and polypropylene forming a screw collar **130** which is integrally formed with the teat **110**. As a result a resilient, cheaply and easily manufactured integral assembly is provided.

The screw collar **130** includes an internally threaded cylindrical portion **132** and a downwardly domed peripheral portion **134** surrounding it and extending from an upper end of the cylindrical portion **132**. The domed portion **134** includes a horizontal outward annular flange **135** of thicker cross-section at its base. The teat **110** is over-moulded onto the screw collar **130** and the domed portion **134** terminates at a central circular orifice corresponding with an outer face of the neck **128** of the vessel **112**, the over-moulded portion

of the teat extending inwardly slightly from this position and terminating in a downwardly depending cylindrical flange **141**.

As a result the screw collar provides structural strength and a strong screw fit, but the resilient material of the teat portion **140** provides sealing. In particular the threaded cylindrical portion **132** of the screw collar screws on to the outwardly threaded neck **128** of the vessel **112** and the top, innermost edge of the domed portion **134** abuts the outer face of the neck **128**. Because the teat material **110** overhangs the inner edge **139** of the domed portion **134**, when the teat assembly **140** is screwed down, the overhanging portion seals against the top rim of the neck **128** and the downward cylindrical flange **141** forms an elastomer sealing ring sealing against the top inner face of the vessel neck **128**. The teat **110** includes a vent passage **126** through the elastomer material and substantially at the periphery. A discontinuous flap or lip valve portion **123** projects down from the flange **141** in a portion of the periphery only in the vicinity of the vent passage **126**.

Because of the resilience of the flange portion, when an infant sucks on the teat, reducing pressure within the vessel, the lip valve **123** will flex away from the neck **128** of the vessel **112**. In the region of the vent **126** in the teat **110**, this allows venting between the interior of the vessel and atmosphere through the teat. Referring to FIG. **6** the lip valve **123** can be seen viewed from the underside. In the embodiment shown it will be seen that a passage **125** actually passes through the lip valve, communicating with the vent passage **126**. In that case the aperture to the passage **125** will seal against the inner face of the vessel in the sealed configuration and unseal to provide a passage.

Alternatively a slit valve **124** can comprise a flap which flexes away from the interior surface to allow communication with a vent passage as described above.

The teat assembly **140** also has a positive engagement stop providing tactile feedback to ensure that the teat assembly is correctly tightened on the vessel and allows the lip valve to seal effectively. Referring to FIGS. **7***a* to **7***c*, for example, it will be seen that a vessel **400** receives a handle portion **402** and a teat screw collar **404**, corresponding to the screw collar **130** described above but with the elastomer teat **10** removed for the purposes of clarity of understanding.

The handle portion **402** includes a cut-out portion **406** which cooperates with projections **408***a*, **408***b* on the vessel to locate the handle portion in a predetermined position. The handle portion is placed over the vessel and located in the desired orientation and then the collar **404**, including an internal thread portion allowing mounting on the vessel **400** is screwed into position as described above, securing the handle portion **402** in place.

As can best be seen in FIG. **7***b*, the collar portion **404** includes an internal lug **410** which projects inwardly from the inner face and engages against a stop feature on the screw threaded portion of the vessel **400** formed by the projections **408***a*, **408***b* such that the teat **110** "clicks" into a desired position. As a result a controlled compression on the lip valve **123** is obtained such that a consistent and repeatable valving action is obtained on each use. In particular the projections **408***a*, **408***b* are separated by a recess, **408***c* best seen in FIG. **7***c*. When the collar **404** is screwed into place the lug **410** passes over the projection **408***b* which has a ramp towards the recess **408***c*. After the lug **410** has ridden up the ramp it drops into the recess **408***c* and is obstructed from further movement by the planar face of the projection **408***a*. The lug **410** further prevents the collar **404** from being unscrewed by virtue of its engagement with the abutting face of the projection **408***b*. However the lug **410** and projection **408***b* have chamfered or radiused abutting faces such that, on application of sufficient unscrewing pressure, the lug **410** rides over the chamfered face of the projection **408***b* and then down the ramp allowing the collar to be fully unscrewed.

In operation the vessel is filled with drinking liquid and the teat assembly **140** is screwed on until positive engagement is detected (for example a discernable "click") meaning that it is correctly fitted. When the infant then drinks from the vessel the pressure difference pulls the lip valve **123** away from the inner face of the neck **128** of the vessel **112** allowing venting through vent passage **126** and hence reducing the risk of colic. Because of the provision of the lip valve there is no requirement for providing slits and a natural, robust and resilient valve assembly is provided. Furthermore, the valve is formed during the moulding operation and requires no secondary operation for its formation providing commercial and manufacturing benefits. Yet further as a single vent passage is provided at one point on the teat, the risk of leakage is reduced, especially as the vent passes through the teat rather than around the vessel neck.

It will be appreciated that the teat can be formed of any material and can be any appropriate shape which may be, for example, non-symmetrical such as a shaped or orthodontic teat or even more closely mimicking the shape of the human breast. Different teat configurations can be provided to grow with different ages of infant. For example the teat portion can be made progressively longer as the age of the infant who will be using the teat increases and/or the texture can be made less prominent, for example ranging from coarse for new-borns through fine to gloss.

In the teat of the first embodiment, the flex channels in the flex region can be of any appropriate profile for example square, semi-circular or triangular in cross-section and can be provided on the inner or outer surface of the teat and in any appropriate number. Instead of providing thinned regions the flexed channels can be formed by a concertina or bellows configurations moulded into the teat or any other appropriate hinge or fold mechanism. Furthermore features of either the first or second embodiment can be interchanged or juxtaposed with one another or implemented in other types of drinking vessel cover as appropriate. For example the lip valve can be implemented in a trainer cup cover, a sports bottle or other vessel closures capable of forming a partial vacuum in a vessel in use.

It will be appreciated that whilst the Figures show a soother comprising a teat of the first embodiment, the invention also encompasses a soother comprising a teat of the second embodiment. The soother comprising the teat and shield/ring components can be formed from any appropriate material. For example, the teat can be formed from silicone, latex or Thermoplastic Elastomer (TPE), whilst the shield and ring can be formed from thermoplastic materials such as polypropylene PP, polycarbonate PC or similar material blends as appropriate. Furthermore, the soother can be manufactured by any appropriate moulding method.

What is claimed is:

1. A feeding bottle comprising:

a) a vessel having:

a cylindrical neck comprising an open top with a first diameter and threads on an outer surface of said neck, and

a body with a second diameter,

the body being connected with said neck, and the first diameter of the open top being less than the second diameter of the body;

b) an internally threaded collar having:

an outermost surface comprising a downwardly domed portion beginning at an upper end of the collar and extending outwardly and downwardly therefrom and disposed at least partially above said internal threads;

c) a nipple having:

a teat portion having a variable wall thickness including an aperture,

a base portion disposed adjacent to said collar and comprising an outermost surface comprising a downwardly sloping portion between said teat portion and the upper end of the collar that, together with said collar, defines a substantially continuous outermost surface between said teat portion and a bottom of said downwardly domed portion of said collar,

an areola portion between the teat portion and the base portion, wherein said areola portion has a flex region on its inner surface comprised of a plurality of thinned regions,

a flange depending from the base portion,

an air valve extending through said nipple and disposed (i) radially inwardly from the collar and (ii) above the flange, and

the flange being arranged to seal with the vessel;

d) the nipple being secured to the collar by sealingly capturing an inner edge of the collar between the base portion and the flange; and,

e) the nipple being secured to the vessel by capturing the flange of the nipple between the collar and the open top of the vessel.

2. The feeding bottle of claim **1** wherein the vessel has two indentations.

3. The feeding bottle of claim **1** wherein the flange forms an elastomer sealing ring sealing against the top of the vessel.

4. The feeding bottle of claim **1** wherein the teat portion comprises an elastic material.

5. The feeding bottle of claim **1** wherein the teat portion projects perpendicular to the open top of the vessel.

6. The feeding bottle of claim **1** wherein the internally threaded collar is sized to mate with the open top of the vessel.

7. The feeding bottle of claim **1** wherein the collar comprises polypropylene.

8. The feeding bottle of claim **1** wherein the air valve is a one-way air-inlet valve.

9. The feeding bottle of claim **1** wherein an outer surface of the teat portion has a first texture and an outer surface of the areola portion has a second, different texture.

10. The feeding bottle of claim **1** wherein an inner surface of the teat portion includes a helical flow path.

11. The feeding bottle of claim **1** wherein the nipple walls decrease in thickness from the base portion through to the teat portion.

12. The feeding bottle of claim **1** wherein the air valve is located below a top edge of the collar.

13. A feeding bottle comprising:

a) a vessel having:

an open top with a first diameter, and

a body with a second diameter,

the body being connected with the open top, and the first diameter of the open top being less than the second diameter of the body;

b) a collar having:

an internally threaded portion, and

a downwardly extending outer domed portion connected to the internally threaded portion, wherein most of the domed portion extends radially away from an inner edge of the collar;

c) a nipple having:

a teat portion having a variable wall thickness including an aperture,

a base portion having a wall thickness,

an areola portion between the teat portion and the base portion,

a flange depending from the base portion,

a vent passage extending through the base portion and spaced inwardly from the collar, and

a valve portion in communication with the vent passage and projecting from the base portion,

the flange being arranged to seal with the vessel;

wherein an outer surface of the teat portion has a first texture and an outer surface of the areola portion has a second, different texture;

d) the nipple being secured to the collar by sealingly capturing the inner edge of the collar between the base portion and the flange; and,

e) the nipple being secured to the vessel by capturing the flange of the nipple between the collar and the open top of the vessel.

14. A feeding bottle comprising:

a) a vessel having an open top,

b) a collar having an upper rim and a lower rim comprising:

an internally threaded inner surface,

an outermost surface having a sloping portion that extends outwardly and downwardly relative to said upper rim, and

wherein said sloping portion comprises a majority of the collar's outermost surface,

c) a nipple having:

a teat portion having a variable wall thickness including an aperture,

a base portion having a domed configuration,

an areola portion between the teat portion and the base portion,

a flange depending from the base portion,

a one-way air inlet valve (i) extending through said base, (ii) projecting downwardly from the base portion, (iii) having a length that does not extend past the collar's lower rim, and (iv) disposed at least partially inwardly from the collar;

the flange being arranged to seal with the vessel;

d) the nipple being secured to the collar by sealingly capturing an inner edge of the collar between the base portion and the flange; and,

e) the nipple being secured to the vessel by capturing the flange of the nipple between the collar and the open top of the vessel.

15. The feeding bottle of claim **14** wherein an inner surface of the teat portion has a groove configured to flex in a direction of the liquid flow.

16. The feeding bottle of claim **14** wherein the open top of the vessel comprises an outwardly threaded vessel neck.

17. The feeding bottle of claim **14** wherein the air inlet valve comprises a slit opening.

18. The feeding bottle of claim **14** wherein an inner surface of the areola portion has a groove extending circumferentially.

19. The feeding bottle of claim **14** wherein the vessel comprises an upper body having a first internal diameter and a portion below the upper body having a second, different internal diameter.

20. The feeding bottle of claim **19** wherein the first internal diameter is greater than the second internal diameter.

* * * * *