US 20060094470A1

(19) United States

(12) Patent Application Publication

(10) Pub. No.: US 2006/0094470 A1

(43) Pub. Date: May 4, 2006

Wake et al.

(54) COMMUNICATIONS SYSTEM AND METHOD

(75) Inventors: **David Wake**, Suffolk (GB); **Keith Beacham**, Suffolk (GB)

Correspondence Address:
VIERRA MAGEN MARCUS & DENIRO LLP
575 MARKET STREET SUITE 2500
SAN FRANCISCO, CA 94105 (US)

(73) Assignee: MICROWAVE PHOTONICS, INC., Los Angeles, CA

(21) Appl. No.: 10/978,501

(22) Filed: Nov. 1, 2004

Publication Classification

(51) Int. Cl.
H04Q 7/20 (2006.01)

(52) U.S. Cl. 455/562.1; 455/560

(57) ABSTRACT

A signal distribution system for distributing signals, such as for outdoor wireless networks, comprises a number of remote hubs, each of which can direct wireless signals to a number of antennas. The antennas are used to provide wireless service to the service users, such as mobile units, within their geographic coverage area. The remote hubs are connected to main hubs, which are usually located centrally. Each main hub can support a number of remote hubs. The main hubs are connected to a number of base stations (again usually located centrally) in a flexible and re-configurable manner using a switch matrix. Some remote hubs may also include switched matrices for a further level of signal routing.

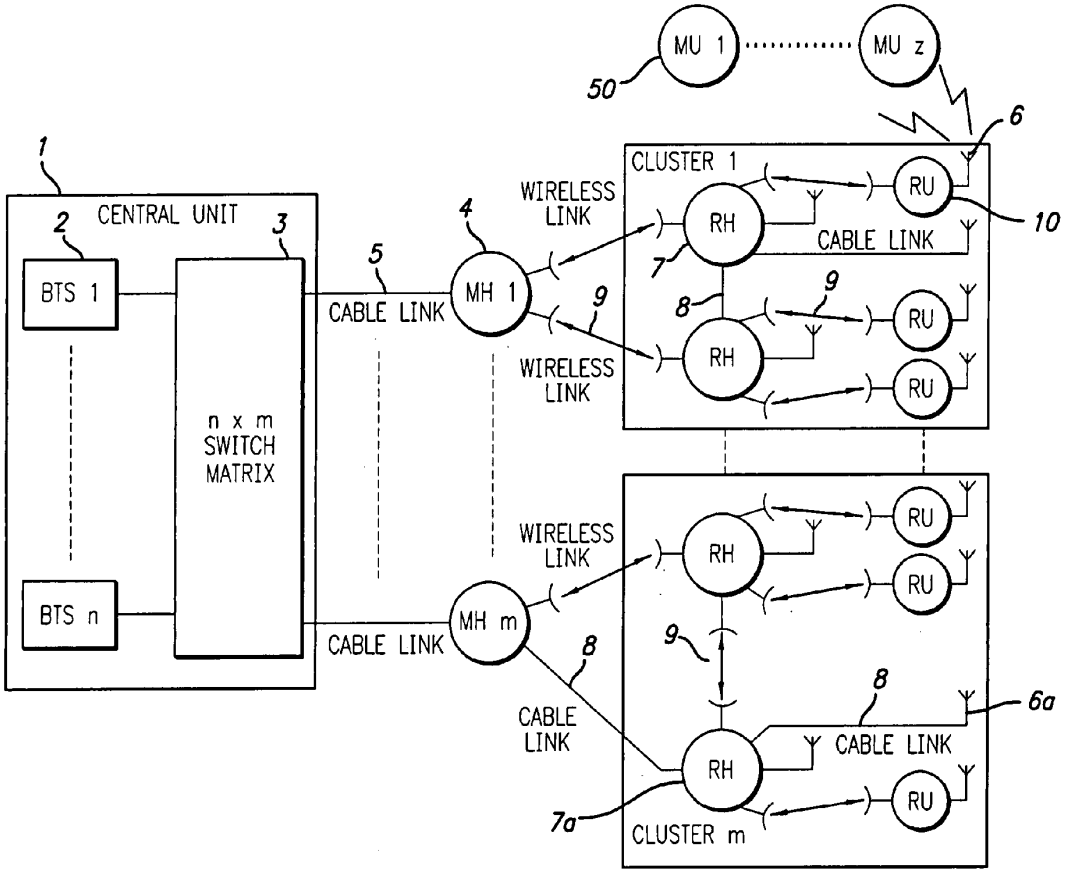

CommScope Ex. 1011

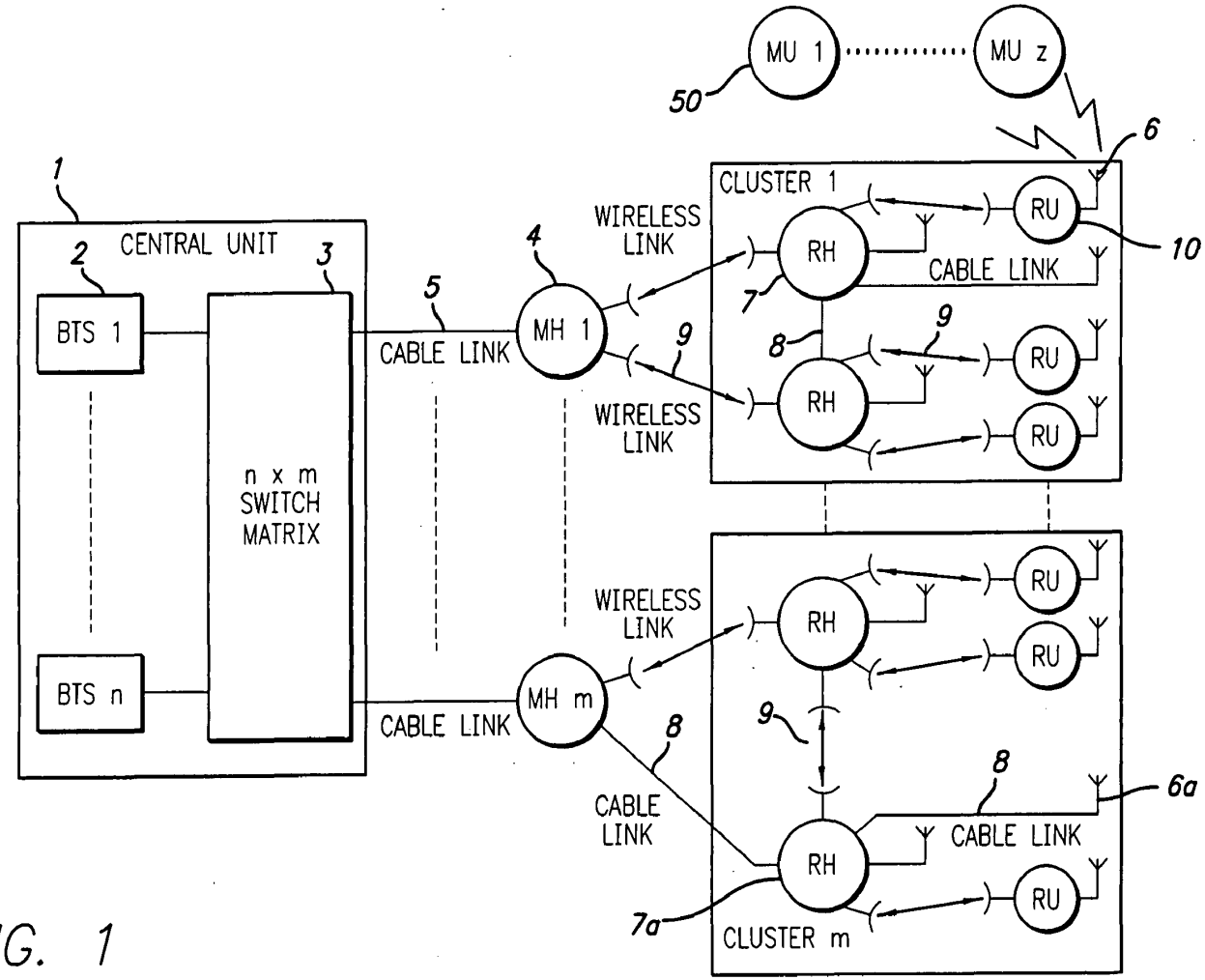
MU 1
MU z
50
6
1
CENTRAL UNIT
2
3
BTS 1
BTS n
n x m
SWITCH
MATRIX
5
CABLE LINK
4
MH 1
MH m
WIRELESS
LINK
9
CLUSTER 1
RH
RU
7
8
10
CABLE LINK
6a
7a
CLUSTER m

FIG. 1

8 x 4 SWITCH MATRIX

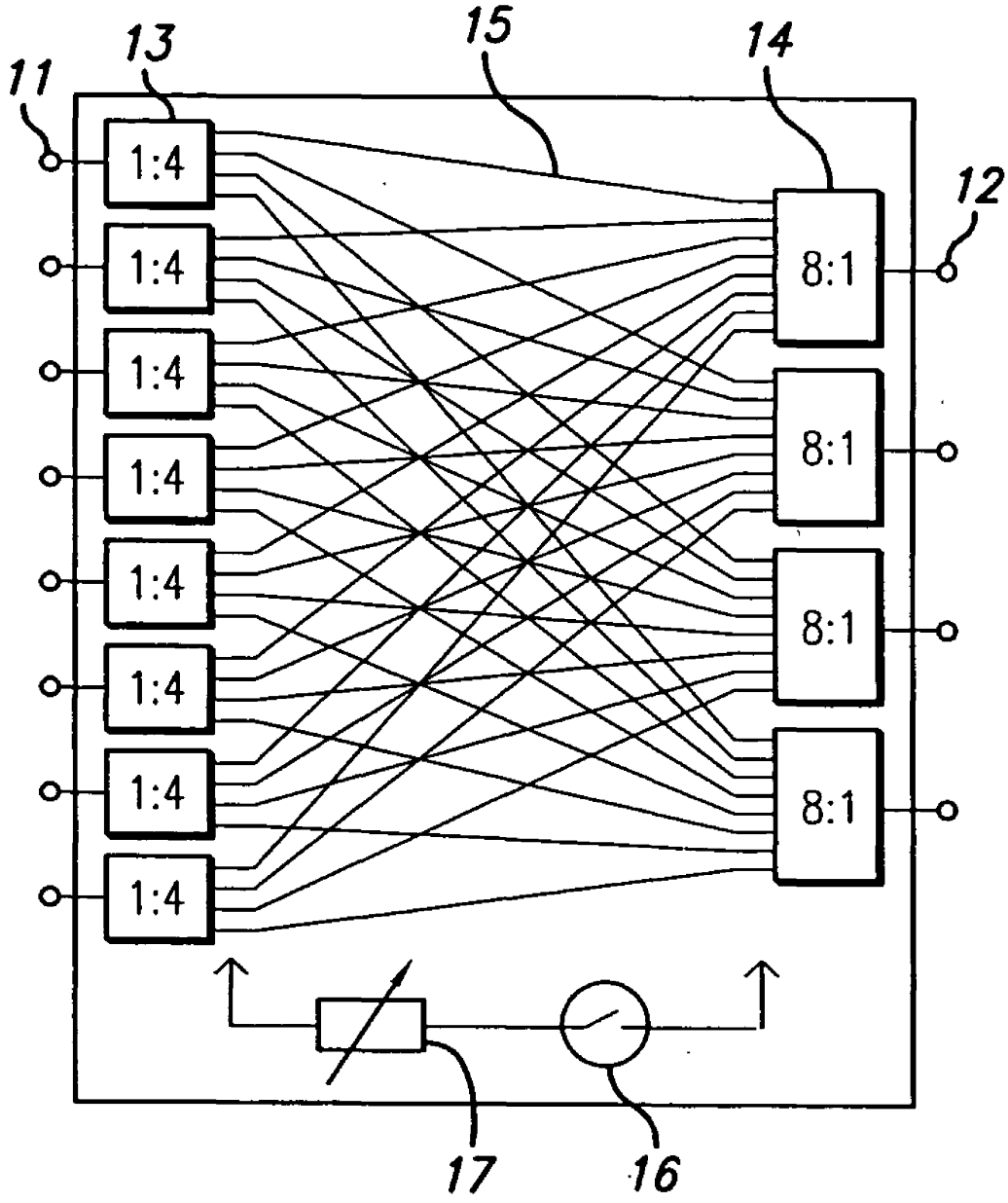

FIG. 2

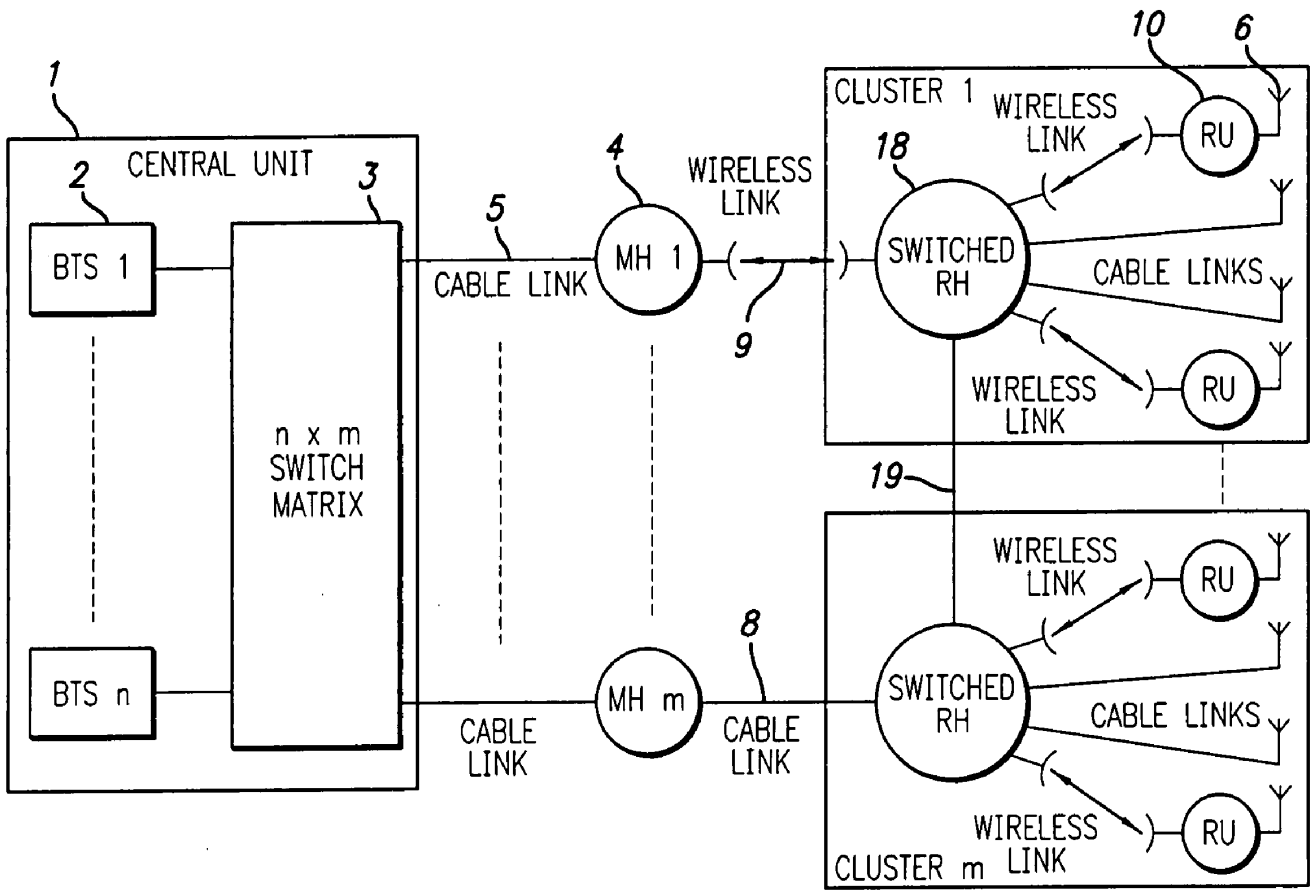
1
CENTRAL UNIT
2
3
BTS 1
BTS n
n x m
SWITCH
MATRIX
5
CABLE LINK
CABLE
LINK
4
MH 1
MH m
WIRELESS
LINK
9
8
CABLE
LINK
10
6
CLUSTER 1
WIRELESS
LINK
18
SWITCHED
RH
RU
CABLE LINKS
WIRELESS
LINK
RU
19
WIRELESS
LINK
RU
SWITCHED
RH
CABLE LINKS
WIRELESS
LINK
RU
CLUSTER m

FIG. 3

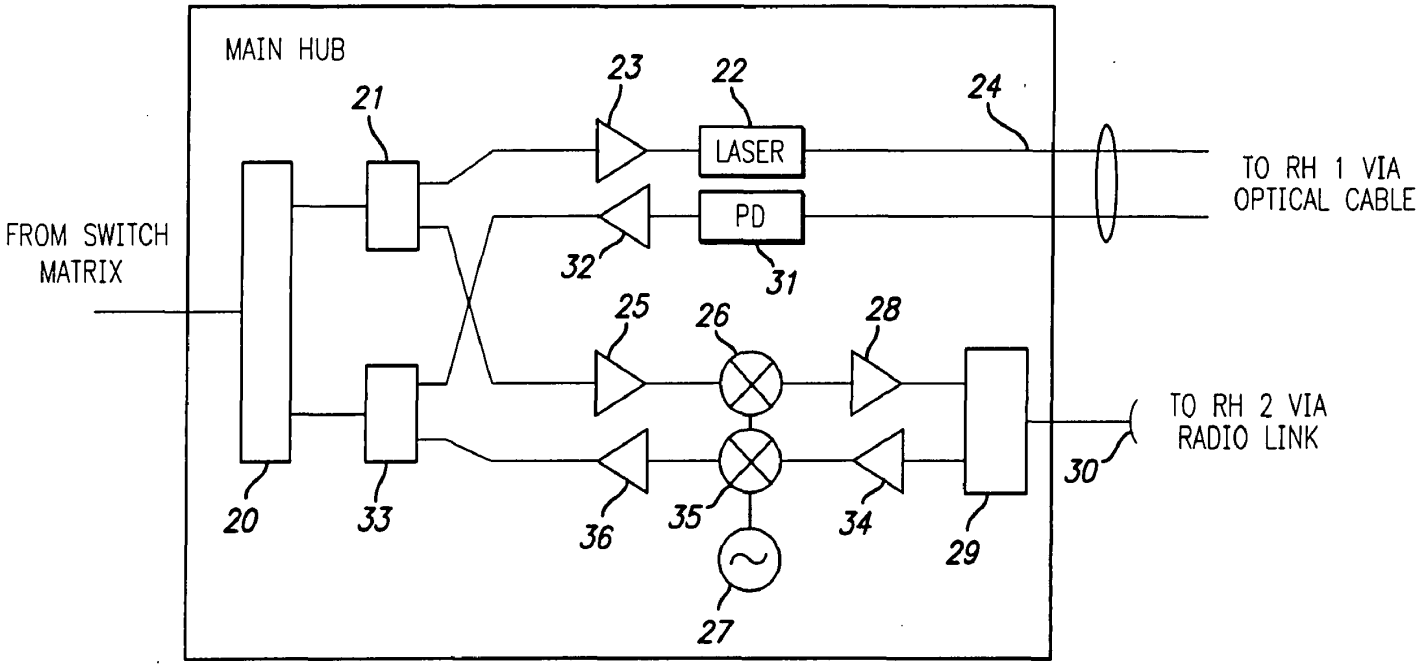
MAIN HUB
FROM SWITCH MATRIX
LASER
PD
TO RH 1 VIA OPTICAL CABLE
TO RH 2 VIA RADIO LINK
20
21
22
23
24
25
26
27
28
29
30
31
32
33
34
35
36

FIG. 4

COMMUNICATIONS SYSTEM AND METHOD

BACKGROUND OF THE INVENTION

[0001] The present invention relates to a communications system and method and, more particularly, to a signal distribution system and method for switching and connecting cells in a communications network.

[0002] The use of a switching matrix for wireless communications systems based on distributed antennas is disclosed by Motley et al. in U.S. Pat. No. 5,682,256. Motley et al. uses a switching matrix to interconnect a number of base stations on the input ports to a number of distributed antennas on the output ports. The switch matrix allows any combination of inputs to be connected to any combination of outputs so that base stations can be connected to antennas in a very flexible manner. This allows wireless services such as cellular radio to be delivered to users with significant cost savings for network operators. The benefits of using a switched distributed antenna system are outlined for example in a paper by Wake and Beacham, "Radio over fiber networks for mobile communications", Proc. SPIE, vol. 5466, 2004.

[0003] The links between the switch matrix and the distributed antennas are accomplished in Motley et al. using optical fiber cables using a technique known as radio over fiber. Radio over fiber has many advantages for this type of network with high quality transmission and low signal attenuation as a function of distance being the primary ones. However, there are situations where optical fiber cables are not available at economic cost at places where they are required. An example of this type of situation is a city center where the local telecommunications operator does not provide 'dark' fiber cables, i.e., fiber cables that are not part of a managed service.

[0004] Chu et al., in U.S. Pat. No. 5,890,055, discloses the use of wireless repeaters in a distributed antenna system (DAS) with a fixed configuration. This architecture avoids the problems of fiber availability described above. However, the fixed configuration described by Chu limits the operational benefits of a switched approach.

BRIEF SUMMARY OF THE INVENTION

[0005] The present invention provides system architecture that gives the operational benefits of a switched-DAS, without the problems caused by fiber availability, by describing a network containing switched wireless links. Furthermore, the present invention describes a system architecture that incorporates distributed switching within remote hubs in order to provide fine granularity in allocating services to antennas.

[0006] One embodiment of the present invention is directed to a transmission system for distributing signals for outdoor wireless networks. The transmission system comprises a number of remote hubs, each of which can direct wireless signals to a number of antennas. The antennas are used to provide wireless service to the service users, such as mobile units, within their geographic coverage area. The remote hubs are connected to main hubs, which are usually located centrally. Each main hub can support a number of remote hubs. The main hubs are connected to a number of base stations (again usually located centrally) in a flexible and re-configurable manner using a switch matrix. The base stations are connected to the core wireless network via digital transmission links.

[0007] The base stations are usually grouped together in a convenient central location, sometimes known as a base station hotel. The radio signals from the centrally located base stations are therefore distributed to many remote antennas using an architecture containing main hubs and remote hubs. The switch matrix, under software control, is able to change the network configuration, i.e., to change which signals from which base stations go to which antenna cluster. This is important in many situations, for example, to be able to move network capacity from under-utilized coverage areas to relieve congestion in over-utilized coverage areas. An example of this situation is the sports stadium scenario, where capacity requirements are very low apart from when an event is taking place. The switch matrix would mean that a dedicated base station is not necessary for the sports stadium, leading to a saving in capital equipment cost. There are many other situations where the switch matrix gives both capital and operational cost savings; these are described in Wake and Beacham cited above.

[0008] The connections between the main hubs and remote hubs, and between the remote hubs and the antennas are either wireless links or a mixture of wireless links and cabled links. In most cases, the technology of choice for the cabled links will be optical fiber, unless the link lengths are so short that coaxial cable can be used. This may happen for instance if the main hub and one of the remote hubs are co-located. The technology options available for the wireless links include in-band radio, out-of-band radio and free-space optics. In-band radio means that no frequency translation is used, i.e., that the radio carrier frequency is used for transmission. Out-of-band radio means that the transmission frequency is different to that of the radio carrier and is usually at a much higher frequency (possibly millimetre-wave) to take advantage of high antenna gain and high available bandwidth. Free-space optics uses an optical carrier for transmission, and is sometimes preferred to radio because it can be used without an operating license and the available bandwidth is not subject to regulation.

[0009] In most cases, the signal that is distributed over the transmission links is likely to be analog (either direct radio carriers or frequency translated radio carriers). However, the present invention does not preclude the transmission of digital signals, whether the signals are baseband or digitized radio (using fast analog to digital converters). Baseband digital signals could for example be those relating to the open base station initiatives (CPRI and OBSAI), where the base stations are split into baseband digital and radio parts and interconnected using digital links. A typical deployment scenario for the present invention may include a mixture of analog, digitized radio and baseband digital links.

[0010] The present invention further includes a communications method for distributing signals employing switched wireless links and may further include employing distributed switching in remote hubs.

[0011] These and other features and advantages of embodiments of the present invention will be apparent to those skilled in the art from the following detailed description of the embodiments of the invention, when read with the drawings and the appended claims.

BRIEF DESCRIPTION OF THE DRAWINGS

[0012] **FIG. 1** is a schematic representation of a signal distribution system of the present invention.

[0013] **FIG. 2** illustrates a switch matrix to be used in a signal distribution system, such as illustrated in **FIGS. 1 and 3**.

[0014] **FIG. 3** is a schematic representation of another signal distribution system of the present invention.

[0015] **FIG. 4** illustrates a main hub in a signal distribution system of the present invention, such as illustrated in FIGS. **1** or **3**.

DETAILED DESCRIPTION OF THE INVENTION

[0016] In the following description of embodiments, reference is made to accompanying drawings which form a part hereof and in which is shown by way of illustration specific embodiments in which the invention may be practiced. It is to be understood that other embodiments may be utilized and structural changes may be made without departing from the scope of the preferred embodiments of the present invention.

[0017] **FIG. 1** is a schematic representation of a signal distribution system of the present invention. The central unit **1** comprises a number of base stations **2** and a n×m switch matrix **3**. The base station output ports are connected to the input ports of the switch matrix. The output ports of the switch matrix are connected to a number of main hubs **4** using cables **5**.

[0018] In one example, the base stations could be located within an equipment room inside a building and the main hubs could be located on the top of the building. The cables would either be optical fiber or coaxial depending on the distance between the main hubs and base stations. It should be noted the number of cables do not have to equal the number of main hubs as illustrated in **FIG. 1**. The number of cables may be more or less than the number of hubs. For example, although a cable will typically be used to connect an output port of the switch matrix to a main hub, a wireless link may be used instead.

[0019] The main hubs each connect to a cluster of antennas **6** via remote hubs **7**. **FIG. 1** illustrates the same number m of main hubs and clusters, but the present invention is not so limited. The number of main hubs can be greater or less than the number of clusters. Connections between the main hubs and remote hubs, between the remote hubs and antennas, and between remote hubs are via a mixture of cable links **8** and wireless links **9** as illustrated in **FIG. 1**. In the case of wireless links, connection to the antennas is made using remote units **10**. The antennas transmit and receive signals to and from mobile units or devices such as, without limitation, cellular telephone and PDAs. **FIG. 1** illustrates antenna **6** transmitting and receiving signals from a mobile unit or a plurality of mobile units such as mobile unit **50**. While **FIG. 1** only illustrates mobile units in contact with antenna **6**, it is to be understood that other mobile units can be in contact with other antennas illustrated in **FIG. 1**. It is also to be understood that one or more mobile units may be in contact with more than one antenna.

[0020] Remote units are not required for the present invention. The use of remote units is only necessary when the signal needs to be processed before being radiated by the antennas to mobile units. For example, in the case of wireless links, a remote unit **10** functions to convert the transmitted signal to the appropriate form (frequency, power, etc.) for radiation from the antenna **6** to mobile unit **50**. On the other hand, remote hub **7*a*** is directly connected to antenna **6*a*** without an intermediary remote unit. Mobile units are thus in direct communication with remote hub **7*a*** through antenna **6*a***.

[0021] The wireless links may use in-band radio, out-of-band radio or free-space optical technology. In-band radio systems are the simplest, in that they transmit the original radio carrier frequency band across the wireless link. This approach may have limitations concerning interference and antenna gain and so out-of-band radio can be used to minimize these problems. In these systems, the original radio carrier frequency band is translated to a different frequency for transmission. Normally the transmission frequency will be much higher than the original radio carrier frequency in order to make use of higher antenna gain and to ensure that adequate transmission bandwidth is available. An alternative approach is to use free-space optical (FSO) systems for the wireless links. FSO has advantages of license-free operation and zero interference with other radio systems.

[0022] The wireless signals may be those of a cellular radio system such as PCS or CDMA2000, or those of other wireless networking systems such as public mobile radio, wireless LAN or broadband wireless access. Radio carrier frequencies range from a few hundred MHz to several GHz for these types of systems, but the present invention is not limited to this frequency range.

[0023] **FIG. 1** illustrates a n×m switch matrix **3**. **FIG. 2** shows an embodiment of such a switch matrix, with example size of 8×4. The switch matrix comprises 8 input ports **11** and 4 output ports **12**. Each input port is connected to a 1:4 splitter **13**, and each output port is connected to an 8:1 combiner **14**. Each output of each splitter is connected to a combiner input as shown in **FIG. 2** so as to ensure that any input to the switch matrix can be available at any output of the switch matrix. The connections **15** between splitters and combiners comprise single pole single throw switch elements **16** and variable attenuators **17** in series. There are therefore 32 switch elements and 32 variable attenuators in total for this size of matrix even though **FIG. 2** schematically illustrates only one switch element and attenuator. The switches can be set to either an "on" state or an "off" state so that any combination of input signals can be routed to any combination of output ports. The variable attenuators can be set to balance the path loss across all paths between input and output.

[0024] **FIG. 3** shows another signal distribution system of the present invention. **FIG. 3** illustrates many of the same elements of **FIG. 1** as indicated by the similar reference numbers. Discussion of these elements will not be repeated. Although **FIG. 3** does not illustrate mobile units, the system may include mobile units as in **FIG. 1**.

[0025] In the illustrated system of **FIG. 3**, some or all of the remote hubs contain switch matrices so that a further level of signal routing can be facilitated. These switched

remote hubs **18** enable an architecture that provides finer granularity than the embodiment of **FIG. 1**, so that each antenna can be individually addressed if required. Radio channels can therefore be routed at the antenna level rather than at the antenna cluster level, which allows greater flexibility in providing service. The switched remote hubs may also be interconnected and controlled by a common control system. The interconnecting links **19** may be either cable or wireless, although a cable link is shown in **FIG. 3** by way of example. Interconnecting the switched remote hubs gives greater network resilience. Although **FIG. 3** only illustrates one switched remote hub per cluster, the present invention can have more than one switched remote hub per cluster.

[**0026**] **FIG. 4** shows an embodiment of a main hub such as illustrated in **FIGS. 1 and 3**. In this example, the main hub connects to two remote hubs, one uses optical fiber cable and the other is a wireless link using out-of-band radio. This main hub is constructed as follows. The input signal from the switch matrix is split into forward and reverse transmission directions using a duplexer **20**. In the forward direction, the signal is then split two ways using a splitter **21**. One of these paths goes to a laser **22** via an amplifier **23**. The optical output from the laser is transmitted to the remote hub using optical fiber cable **24**.

[**0027**] The other forward path goes to a frequency upconverter, which comprises an input amplifier **25**, a mixer **26**, a local oscillator **27** and an output amplifier **28**. A further duplexer **29** is used at the output port of the radio link in order to combine forward and reverse transmission directions. The output radio signal is radiated using an antenna **30**.

[**0028**] In the reverse direction, the signals enter the main hub either via the optical cable or the radio link. In the case of the optical cable, the optical signal is converted back to a radio signal using a photodiode **31**, amplified using amplifier **32** and combined with other reverse path signals using a combiner **33**. In the case of the radio link, the reverse signal passes through the duplexer **29** and is frequency translated back to the original radio carrier frequency using a downconverter. The downconverter comprises an input amplifier **34**, a mixer **35**, a local oscillator **27** and an output amplifier **36**. The remote hubs in **FIGS. 1 and 3** may have a similar construction to the main hub illustrated in **FIG. 4**.

[**0029**] Features of all hubs in the present invention include: one or more input ports, converters (if necessary) to bring a transmitted signal back to an in-band radio signal, a duplexer to separate forward and reverse transmission directions, splitter/combiners, an amplification of an in-band radio signal, converters (if necessary) to convert a signal to an appropriate transmission medium (e.g., out-of-band radio or FSO) and one or more output ports.

[**0030**] The remote hubs may also be interconnected, again using either cable links or wireless links, to provide additional resilience to the system. The use of interconnecting links between the remote hubs, and the option of having distributed switch matrices in the remote hubs, opens up intriguing possibilities for system management and control. In addition to greater network resilience afforded by such a meshed system, there are opportunities for extending the reach and routing around obstacles in the case of wireless links. The ability to route around obstacles makes the network closer to a line-of-sight radio system, which increases quality of service and reduces cost.

[**0031**] The arrangement and architecture of the present invention described here constitutes a distributed antenna system for providing capacity and coverage for an outdoor wireless communications network. Features of the present invention include: the use of a switch matrix, which allows coverage and capacity to be allocated dynamically (thereby saving capital and operating costs compared to traditional DAS architectures); the selective use of wireless links between the base stations and the antennas (thereby providing a cost-effective transmission solution in cases where cable availability is non-existent or impractical); an architecture that incorporates distributed switching within remote hubs to provide fine granularity in allocating services to antennas; and an interconnected wireless network topology that provides resilience to failure, routing around obstacles and an extended reach.

[**0032**] The combination of such features provides a signal distribution system and architecture that is attractive to wireless network operators due to the cost savings and operational flexibility compared to deployments based on prior art systems.

[**0033**] Although the present invention has been described as a communications system, the present invention discussed above can be performed as a communications method or methods. While a method will be described as transmitting signals from the one or more base stations to one or more distributed antennas, it is to be understood that the method can be performed in reverse from one or more distributed antennas to one or more base stations.

[**0034**] The communications method can comprise transmitting signals from a plurality of base stations to a switch matrix. As illustrated in **FIG. 1**, the base station **2** is connected to a switch matrix **3** for transmitting and receiving signals therebetween. A plurality of base stations can thus transmit signals to the switch matrix.

[**0035**] The method can further comprise routing the signals by the switch matrix as, for example, illustrated in **FIG. 2**. The method can further comprise transmitting the routed signals to a plurality of distributed antennas via communication links. The communication links can be wireless, cable or a combination of wireless and cable.

[**0036**] The communications method can further comprise transmitting the routed signals to a hub, such as main hub **4** in **FIG. 1**, and then transmitting those routed signals from the hub to the plurality of distributed antennas. If the distributed antennas are in clusters, the communications method may comprise transmitting those routed signals from the hub to only one cluster. **FIG. 1** illustrates an example of this procedure. Main hub **4** only transmits the routed signals that it receives to cluster **1**. Cluster **1** is a subset of all the distributed antennas in the system.

[**0037**] The communications method can further comprise sending routed signals from the hub to a remote hub and having the remote hub transmit the signals to the cluster of distributed antennas or some smaller group of distributed antennas in that cluster. For example, in **FIG. 1**, the main hub **4** transmits at least some of the routed signals that it receives to remote hub **7** which, in turns, sends the signals to certain distributed antennas in the cluster.

[0038] The communications method can further comprise routing signals by a switch matrix in the remote hub to the distributed antennas in the cluster or some smaller group of distributed antennas in the cluster. For example, **FIG. 3** shows a remote hub **18** having a switch matrix for such routing.

[0039] The communications method can further comprise transmitting signals by more than one remote hub to the distributed antennas in the cluster. As shown in **FIG. 1**, for example, two remote hubs send signals to different groups of distributed antennas in the cluster. It should be noted that a distributed antenna can simply be an antenna (as in **6***a* of **FIG. 1**) or comprise a remote unit with an antenna (as in **10** and **6** in **FIG. 1**). The communications method can further comprise connecting the remote units in a cluster. For example, as illustrated in **FIG. 1**, remote units in cluster **1** are connected by connection **8** emanating from remote unit **7**. The communications method is not limited to connecting remote units in a cluster. Remote units from different clusters can be connected as illustrated in **FIG. 3**.

[0040] Although the present invention has been fully described in connection with the embodiments thereof and with reference to the accompanying drawings, it is to be noted that various changes and modifications will become apparent to those skilled in the art. Such changes and modifications are to be understood as being included within the scope of the present invention as defined by the claims.

What is claimed is:

1. A communications system comprising:

a plurality of base stations transmitting signals;

a plurality of distributed antennas in communication with mobile devices;

a switch matrix in operation with the plurality of base stations to route the signals to the plurality of distributed antennas; and

a plurality of links for transmitting the routed signals from the switch matrix to the plurality of distributed antennas, wherein at least one of the plurality of links is a wireless link.

2. The communications system of claim 1 further comprising at least one hub between the switch matrix and the plurality of distributed antennas for transmitting routed signals from the switch matrix to the plurality of distributed antennas.

3. The communications system of claim 2 wherein the plurality of distributed antennas are arranged in a plurality of clusters and wherein the hub transmits routed signals to only a cluster of distributed antennas.

4. The communications system of claim 3 further comprising at least one remote hub between the hub and the cluster of distributed antennas for transmitting routed signals from the hub to the cluster.

5. The communications system of claim 4 further wherein at least one antenna in the cluster of distributed antennas comprises a remote unit with an antenna.

6. The communications system of claim 4 wherein the remote hub comprises a switch matrix to route signals from the hub to a group of distributed antennas in the cluster.

7. The communications system of claim 4 further comprising:

a second remote hub between the hub and the cluster for transmitting routed signals from the hub to the cluster; and

a link between the remote hub and the second remote hub.

8. The communications system of claim 7 further comprising a control system and wherein each of the remote hub and the second remote hub comprises a switch matrix controlled by the control system.

9. The communications system of claim 1 wherein the wireless link transmits routed signals at a radio carrier frequency band of at least one of the plurality of base stations.

10. The communications system of claim 1 wherein the wireless link transmits routed signal at a radio carrier frequency band different from a radio carrier frequency band of at least one of the plurality of base stations.

11. The communications system of claim 1 wherein the wireless link is a free space optical link that transmits routed signals at an optical frequency.

12. The communications system of claim 1 wherein all the plurality of links are wireless links.

13. A communications method comprising:

transmitting signals from a plurality of base stations to a switch matrix;

routing the signals by the switch matrix; and

transmitting routed signals to a plurality of distributed antennas via a plurality of links wherein at least one of the plurality of links is a wireless link.

14. The communications method of claim 13 wherein the step of transmitting comprises a first step of transmitting routed signals to a hub and a second step of transmitting routed signals from the hub to the plurality of distributed antennas.

15. The communications method of claim 14 wherein the second step of transmitting comprises sending routed signals from the hub to only a cluster of distributed antennas from the plurality of antennas.

16. The communications method of claim 15 wherein the step of sending comprises a first step of sending routed signals from the hub to a remote hub and a second step of sending routed signals from the remote hub to the cluster.

17. The communications method of claim 16 wherein the second step of sending comprises routing signals by a switch matrix in the remote hub to a group of distributed antennas in the cluster.

18. The communications method of claim 16 further comprising:

transmitting signals routed signals from the hub to the cluster by a second remote hub; and

connecting the remote hub and the second remote hub.

* * * * *