UNITED STATES PATENT AND TRADEMARK OFFICE

BEFORE THE PATENT TRIAL AND APPEAL BOARD

SIEMENS MOBILITY, INC.,
GROUND TRANSPORTATION SYSTEMS USA INC.,
HUMATICS CORP., and PIPER NETWORKS, INC.,
Petitioner,

v.

METROM RAIL, LLC,
Patent Owner.

IPR2023-00468
Patent No. 9,043,131 B2

METROM RAIL, LLC'S NOTICE OF APPEAL
TO THE U.S. COURT OF APPEALS FOR THE FEDERAL CIRCUIT

Pursuant to 35 U.S.C. §§ 141(c) and 319, and 37 C.F.R. § 90.2(a), notice is hereby given that Patent Owner Metrom Rail, LLC appeals to the United States Court of Appeals for the Federal Circuit from the Final Written Decision (Paper 69) entered by the Patent Trial and Appeal Board on June 18, 2024 in IPR2023-00468, and all prior interlocutory rulings related thereto or subsumed therein. The Final Written Decision (Paper 69) is attached to this notice.

In accordance with 37 C.F.R. § 90.2(a)(3)(ii), Patent Owner identifies at least the following issues for appeal:

- The Board's judgment that Claims 1-16 of Patent No. 9,043,131 are unpatentable and any finding or determination supporting or related to that judgment;
- Any Board finding, determination, judgment, or order supporting or related to the Final Written Decision and decided adversely to Patent Owner.

Pursuant to 37 C.F.R. § 90.3, this Notice of Appeal is timely, having been duly filed within 63 days after the date of the Final Written Decision, along with the required fees.

A copy of this Notice of Appeal is being filed simultaneously with the Patent Trial and Appeal Board, the Clerk's Office for the United States Court of Appeals for the Federal Circuit, and the Director of the U.S. Patent and Trademark Office.

Respectfully submitted,

Dated: August 15, 2024

/*Gregory C. Schodde*/

Gregory C. Schodde
Registration No. 36,668
MCANDREWS HELD & MALLOY
500 West Madison, 34th Floor
Chicago, IL 60661
Telephone: (312) 775-8000
Facsimile: (312) 775-8100

CERTIFICATE OF FILING

The undersigned hereby certifies that, in addition to being electronically filed through P-TACTS, a true and correct copy of the above-captioned **METROM RAIL, LLC'S NOTICE OF APPEAL** is being served via electronic mail to the Director of the United States Patent and Trademark Office, on August 15, 2024, at the following address:

Director of the United States Patent and Trademark Office
c/o Office of the General Counsel
Mail Stop 8
P.O. Box 1450
Alexandria, VA 22313
efileSO@uspto.gov

The undersigned also herby certifies that a true and correct copy of the above-captioned **METROM RAIL, LLC'S NOTICE OF APPEAL** and the filing fee is being filed via CM/ECF with the Clerk's Office of the United States Court of Appeals for the Federal Circuit on August 15, 2024.

Dated: August 15, 2024

/Gregory C. Schodde/
Gregory C. Schodde
(Registration No. 36,668)
Counsel for Patent Owner
Metrom Rail, LLC

CERTIFICATE OF SERVICE

The undersigned hereby certify that the foregoing **METROM RAIL, LLC'S NOTICE OF APPEAL** was filed through the P-TACTS Processing System as well as served electronically via e-mail on August 15, 2024 in its entirety on the following:

howard@wisnialaw.com
nspeed@wolfgreenfield.com
gnieberg-ptab@wolfgreenfield.com
msupko@crowell.com
jjames@crowell.com
kschmitz@crowell.com
thatcher.rahmeier@faegredrinker.com
zach.kachmer@faegredrinker.com
ncunningham@dority-manning.com
smoore@dority-manning.com

Respectfully submitted,

Dated: August 15, 2024

/Gregory C. Schodde/

Gregory C. Schodde
Reg. No. 36,668
McAndrews, Held & Malloy, Ltd.
500 West Madison Street, 34th Floor
Chicago, Illinois 60661
(312) 775-8000
(312) 775-8100

Trials@uspto.gov
Tel: 571-272-7822

Paper 69
Date: June 18, 2024

UNITED STATES PATENT AND TRADEMARK OFFICE

BEFORE THE PATENT TRIAL AND APPEAL BOARD

SIEMENS MOBILITY, INC.,
GROUND TRANSPORTATION SYSTEMS USA INC.,
HUMATICS CORP., and PIPER NETWORKS, INC.,
Petitioner,

v.

METROM RAIL, LLC,
Patent Owner.

IPR2023-00468
Patent 9,043,131 B2

Before NEIL T. POWELL, STACEY G. WHITE, and IFTIKHAR AHMED, *Administrative Patent Judges.*

AHMED, *Administrative Patent Judge*.

JUDGMENT
Final Written Decision
Determining Some Challenged Claims Unpatentable
35 U.S.C. § 318(a)

I. INTRODUCTION

This is a Final Written Decision in an *inter partes* review challenging the patentability of claims 1–20 (the "challenged claims") of U.S. Patent No. 9,043,131 B2 (Ex. 1001, "the '131 patent"). We have jurisdiction under 35 U.S.C. § 6.

Petitioner has the burden of proving unpatentability of the challenged claims by a preponderance of the evidence. 35 U.S.C. § 316(e). Having reviewed the parties' arguments and supporting evidence, for the reasons discussed herein, we determine that Petitioner has shown, by a preponderance of the evidence, that claims 1–16 are unpatentable but Petitioner has not shown, by a preponderance of the evidence, that claim 17–20 are unpatentable.

II. BACKGROUND

A. Procedural History

Siemens Mobility, Inc., Ground Transportation Systems USA Inc., Humatics Corp., and Piper Networks, Inc. (collectively, "Petitioner") filed a petition requesting *inter partes* review of the challenged claims of the '131 patent. Paper 5 ("Pet."). Metrom Rail LLC ("Patent Owner") timely filed a Preliminary Response. Paper 9.

Following our Institution Decision (Paper 10 ("Inst. Dec.")), Patent Owner filed a Response. Paper 22 ("PO Resp."). Petitioner filed a Reply. Paper 43 ("Pet. Reply"). Patent Owner filed a Sur-Reply. Paper 49 ("PO Sur-Reply"). A hearing was held on March 28, 2024, and a transcript of the hearing has been entered in this proceeding. Paper 68 ("Tr.").

B. Related Proceedings

Early in the proceeding, the parties identified the following proceeding involving the ’131 patent: *Metrom Rail, LLC v. Siemens Mobility, Inc.*, No. 1:22-cv-00049-RGA (D. Del. filed Jan. 13, 2022). Pet. viii; Paper 7, 3. Patent Owner more recently reports this case was transferred to Southern District of New York and the case severed. Paper 25, 2. Patent Owner indicates the cases currently pending are *Metrom Rail, LLC v. Ground Transportation Sys. USA, Inc. & Piper Networks, Inc. Siemens Mobility, Inc., et al.*, 23-cv-02920-DLC, and *Metrom Rail, LLC v. Siemens Mobility, Inc. and Humatics Corp.*, 23-cv-03057-MKV. *Id.*

Patent Owner also states, “IPR2023-00439, IPR2023-00452, IPR2023-00460 and IPR2023-00470 involve the same parties as this proceeding.” Paper 7, 3.

C. Real Parties in Interest

Petitioner identifies Siemens Mobility, Inc., Ground Transportation Systems USA Inc., Humatics Corp., Piper Networks, Inc., and Thales USA, Inc. as the real parties in interest. Pet. viii. Patent Owner identifies Metrom Rail, LLC as the sole real party in interest. Paper 7, 2.

D. The ’131 patent (Ex. 1001)

The ’131 patent describes collision avoidance systems (“CAS”) used in the railroad industry (Ex. 1001, 1:20–21) to control maintenance equipment, vehicles, railcars, hyrail vehicles, train cars, train engines, and other rail line vehicles (*id.* at 3:46–63, Figs. 1A–1C, 2). Figure 1C depicts a hyrail vehicle that operates on railroad tracks *and roads* (*id.* at 3:54) and includes a CAS (*see id.* at 3:55–63, Fig. 2 (vehicle 204)). The ’131 patent’s CAS technology may be used in other vehicles, applications, and industries

where vehicle spacing, location, and status are important, including the construction, mining, and airport (on airport tarmacs) industries. *Id.* at 29:33–41.

CAS 300 includes four main components types of (1) transponder sensor modules (TSMs) 306, 308, (2) control electronics modules (CEMs) 310, 312, (3) user interface modules (UIMs) 314, 316, and (4) central tracking unit (CTU) 318. Ex. 1001, 6:8–13. When a group of modules such as TSM 306, CEM 310, and UIM 314 are located in or on a single vehicle 302, they are referred to collectively as a vehicle mounted module (VMM) even though individual modules and components may or may not be housed in a unitary package or enclosure. *Id.* at 6:13–19, Fig. 3.

Figure 3 of the ’131 patent is reproduced below to illustrate CAS 300 in which CTU 318 is configured in discrete housing 320 to receive location, speed, and separation distance from VMMs on vehicles 302, 304.

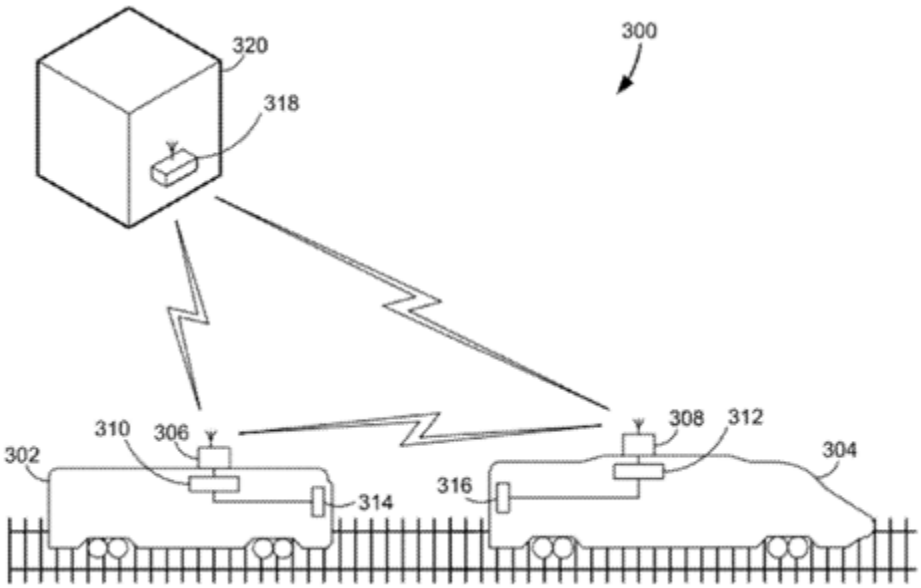

Figure 3 depicts CTU 318 receiving data from VMMs (TSM 306/308, CEM 310/312, UIM 314/316) on rail vehicles 302, 304. Ex. 1001, 6:4–56. CTUs may be dispersed in VMMs as shown in Figure 4, reproduced below.

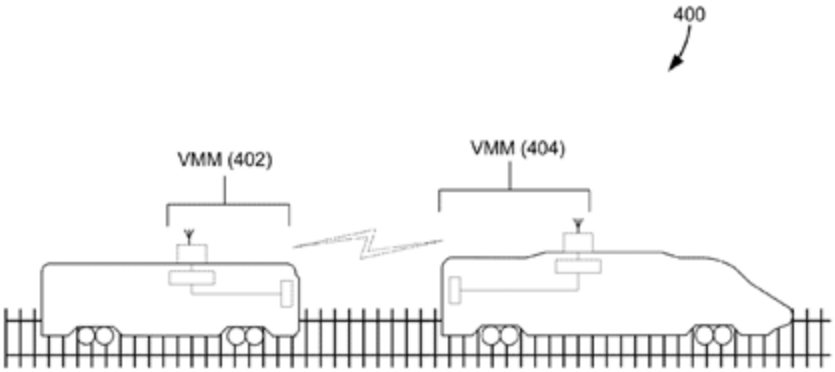

Figure 4 depicts CTUs dispersed in VMMs 402, 404 of each vehicle to track the location of other vehicles in a work gang. Ex. 1001, 6:57–7:8.

Figure 6 is reproduced below to depict the configuration of a VMM.

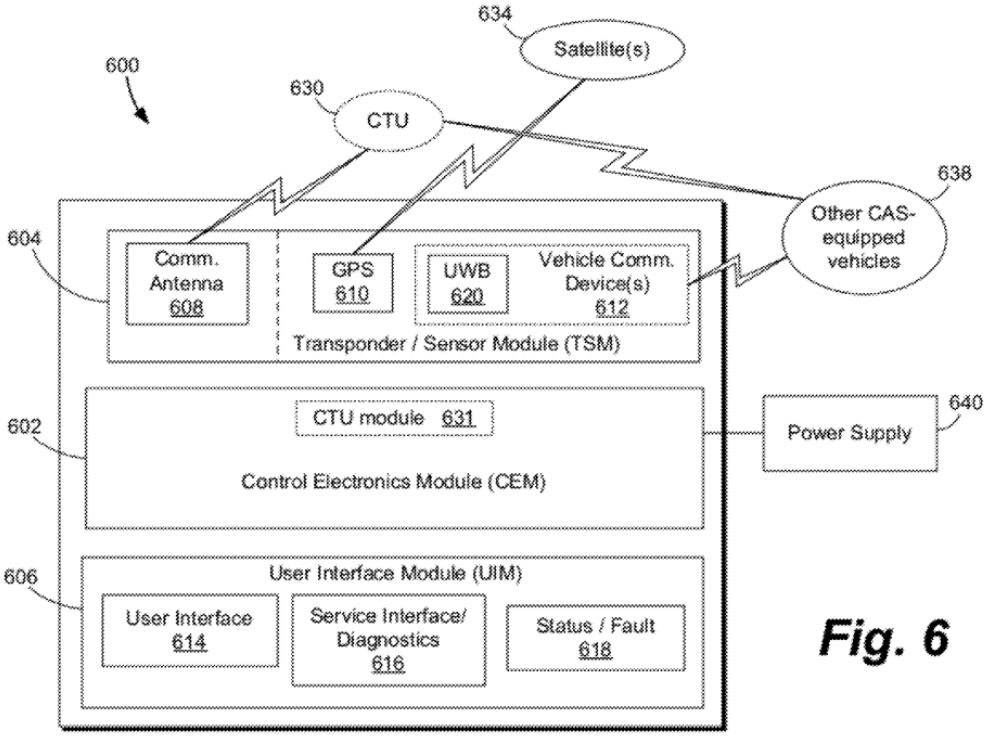

Figure 6 is a block diagram of VMM 600 with CEM 602, TSM 604 and UIM 606. Ex. 1001, 7:33–50. TSM 604 includes wireless antenna 608 to send and receive data, GPS unit 610, and ultra-wideband (UWB) unit 620. *Id.* at 7:38–44. VMM 600 may transmit absolute position, relative position, and vehicle speed obtained from GPS unit 610, UWB unit 620, and/or other

sensors to CTUs 631/630. *Id.* at 7:63–8:1. VMM 600 may gather absolute position data from satellites 634 using GPS unit 610. *Id.* at 8:4–7. User interface 614 may be located in a crew area/passenger cab. *Id.* at 8:51–52.

CEM 700 may use inertial measurement unit 710 with accelerometers and gyroscopes to detect changes in vehicle speed. Ex. 1001, 9:60–10:5, Fig. 7.

E. Challenged Claims

Petitioner challenges claims 1–20 of the ’131 patent. Pet. 1–4. Claims 1 and 17 are independent. Claims 2–16 depend from claim 1. Claims 18–20 depend from claim 17. Ex. 1001, 30:44–33:31 (the ’131 patent claims). Claim 1 is reproduced below with Petitioner’s annotations.

> [1-Pre] A collision avoidance system comprising:
>
> [1A] a first vehicle mounted module mounted on a first rail vehicle, the first vehicle mounted module comprising:
>
> [1B] a first transponder sensor module operable to send and receive data wirelessly, the first transponder sensor module comprising a first radio communication unit and a first antenna;
>
> [1C] a first control electronics module comprising a first processor in communication with at least the first transponder sensor module; and
>
> [1D] a first user interface module including a first user interface, the first user interface operable to provide rail vehicle information to a vehicle operator and to receive input from the vehicle operator;
>
> [1E] a second vehicle mounted module mounted on a second rail vehicle, the second vehicle mounted module comprising:
>
> [1F] a second transponder sensor module operable to send and receive data wirelessly, the second transponder sensor module comprising a second radio communication unit and a second antenna;

[1G] a second control electronics module comprising a second processor in communication with at least the second transponder sensor module; and

[1H] a second user interface module including a second user interface, the second user interface operable to provide rail vehicle information to the vehicle operator and to receive input from the vehicle operator;

[1I] wherein: the first vehicle mounted module is operable to communicate with the second vehicle mounted module mounted on the second rail vehicle; and

[1J] the first vehicle mounted module and the second vehicle mounted module are operable to apply a time of flight technique to determine a separation distance between the first rail vehicle and the second rail vehicle.

Ex. 1001, 30:44–31:12; *see* Pet. 84 (Appendix of Challenged Claims).[1]

Claim 17 is reproduced below with Petitioner's annotations.

[17-Pre] A rail vehicle module mountable on a first rail vehicle, the module comprising:

[17A] a transponder sensor module comprising:

[17B] a radio communication unit operable to employ time of flight techniques to detect a distance between the first rail vehicle and a second vehicle;

[17C] a first wireless communications antenna operable to send and receive data representing the separation distance over the air;

[17D] a global positioning system unit operable to receive information from one or more satellites to determine an absolute position of the first rail vehicle;

[17E] a control electronics module comprising a processor in communication with at least the transponder sensor module; and

[17F] a user interface module including a user interface operable to provide rail vehicle information to a

[1] For ease of reference, we adopt Petitioner's designations of claim elements. Pet. 9–76, 84–88.

vehicle operator and to receive input from the vehicle operator;

[17G] wherein the rail vehicle module communicates with a second rail vehicle module mountable on the second vehicle to detect a separation distance between the first rail vehicle and the second vehicle.

Ex. 1001, 32:45–67; Pet. 87.

F. Prior Art and Asserted Grounds

We instituted a trial based on all asserted claims and grounds of unpatentability as follows:

Ground[2]	Challenged Claim(s)	35 U.S.C. §	Reference(s)/Basis
1A	1, 11, 14	103(a)[3]	Grisham[4]
1B	2–4	103(a)	Grisham, Douglas[5]
1C	5, 6	103(a)	Grisham, Richardson[6]
1D	10	103(a)	Grisham, McDaniel[7]

[2] For ease of reference, we adopt Petitioner's identification of Petitioner's asserted grounds. *See* Pet. 3–4.
[3] The Leahy-Smith America Invents Act ("AIA") included revisions to 35 U.S.C. § 103 that became effective on March 16, 2013. Changes made to 35 U.S.C. § 103 in the AIA do not apply to any application for patent filed before March 16, 2013. Because the '131 patent has an effective filing date before March 16, 2013, we refer to the pre-AIA versions of § 103.
[4] US 6,759,948 B2, issued July 6, 2004 (Ex. 1006, "Grisham").
[5] US 8,874,359 B2, issued Oct. 28, 2014 (Ex. 1011, "Douglas").
[6] Richardson, P., *An outdoor UWB tracking system to improve safety of semi-autonomous vehicle operations*, 1 INT. J. ULTRA WIDEBAND COMMUNICATIONS AND SYSTEMS 3:209–221, 2010 (Ex. 1008, "Richardson").
[7] US 2007/0255498 A1, published Nov. 1, 2007 (Ex. 1015, "McDaniel").

Ground[2]	Challenged Claim(s)	35 U.S.C. §	Reference(s)/Basis
1E	12, 13	103(a)	Grisham, Breed[8]
1F	15	103(a)	Grisham, Connell[9]
2A	7–9, 17, 19	103(a)	Grisham, Nixon[10]
2B	16	103(a)	Grisham, Nixon, Connell, McDaniel
2C	18	103(a)	Grisham, Nixon, Richardson
2D	20	103(a)	Grisham, Nixon, Richardson, Douglas
3A	1, 7, 8, 11–14, 17	103(a)	(Suzuki)[11] or (Suzuki, Grisham)
3B	2–6, 18, 20	103(a)	(Suzuki, Richardson) or (Suzuki, Grisham, Richardson)
3C	9, 19	103(a)	(Suzuki, Nixon) or (Suzuki, Grisham, Nixon)
3D	10	103(a)	(Suzuki, McDaniel) or (Suzuki, Grisham, McDaniel)
3E	15	103(a)	(Suzuki, Connell) or (Suzuki, Grisham, Connell)
3F	16	103(a)	(Suzuki, Nixon, Connell, McDaniel) or (Suzuki, Grisham, Nixon, Connell, McDaniel)

Petitioner relies on a declaration of Mr. Scott Andrews. Ex. 1003. Patent Owner supports its opposition with declarations of Dr. Todor Cooklev (Ex. 2011) and Mr. Carl Conti (Ex. 2012).

[8] US 2010/0052945 A1, published Mar. 4, 2010 (Ex. 1014, "Breed").
[9] US 2009/0255329 A1, published Oct. 15, 2009 (Ex. 1012, "Connell").
[10] WO 03/009254 A1, published Jan. 30, 2003 (Ex. 1016, "Nixon").
[11] EP 1,785,744 A1, published May 16, 2007 (Ex. 1005, "Suzuki").

III. ANALYSIS

A. Level of Ordinary Skill in the Art

Petitioner asserts that a person of ordinary skill in the art "would have had a background in wireless electronics, including at least a bachelor's degree in electrical engineering or a related field, and would have at least two years of experience with using such electronics for control systems applications such as collision-avoidance systems or positioning systems." Pet. 7 (citing Ex. 1003 ¶¶ 23–28).

> Patent Owner contends that a person of ordinary skill in the art would have had a background in wireless electronics, including at least a bachelor's degree in electrical engineering or a related field, and would have at least two years of experience with using such electronics for control systems applications such as *railway* collision-avoidance systems or *railway* positioning systems.

PO Resp. 4 (citing Ex. 2012 ¶ 37) (emphases added). Patent Owner argues that Petitioner's approach expansively includes anyone working on collision avoidance and does not acknowledge that the railroad industry specifically is resistant to change and innovation. *Id.* (citing Ex. 2012 ¶ 40). Accordingly, Patent Owner contends that a person of ordinary skill in the art also would be characterized as "reluctant to innovate, a characteristic of this industry." *Id.* at 5.

Petitioner responds that Patent Owner's attempt to add railway to the level of skill should be rejected, especially given that Kurt Gunther, a named inventor on the '131 patent, did not begin working on railway vehicles until March 2011, and filed the first provisional application related to the '131 patent only two months later. Pet. Reply 2 (citing Ex. 1001, code (60); Ex. 2009 ¶ 10; Ex. 1052, 14:2–24:22).

In our Institution Decision, we adopted Petitioner's proposed level of skill in the art. Inst. Dec. 9–11. On the complete record, we determine that Petitioner's proposed level of ordinary skill is consistent with the '131 patent and the asserted prior art.

The '131 patent provides some guidance on the level of ordinary skill in the art. Specifically, the '131 patent explains that:

> Although the present disclosure describes a collision avoidance system that may be applied to a work gang of railroad vehicles, the technology and the concepts described herein may be utilized in other vehicles, applications and/or industries, for example, in industries where spacing, location and status is important. Some industries that may utilize the concepts described herein are (1) the construction industry, (2) the mining industry, (3) the airport industry, specifically on airport tarmacs.

Ex. 1001, 29:33–41.

This disclosure indicates the '131 patent's CAS technologies can be used with other vehicles and systems. The disclosed CAS uses UWB and GPS sensors to determine vehicle location, speed, and separation distance for collision avoidance as discussed above. Ex. 1001, 3:31–4:60, 6:4–8:13. The '131 patent discloses that prior art CASs for trains already used technologies such as GPS.

> Previous systems for preventing collisions of rail line vehicles have typically utilized a single sensor, for example a GPS or radar-based sensor, to monitor the approximate location of rail mounted vehicles [but] [a] shortcoming of single sensor systems, such as ones that depend on GPS sensors, is that the rail vehicles being monitored often enter into "blackout" areas (for example, around buildings, in the mountains, canyons,

> around sharp curves or in tunnels) where the single sensor may be unable to accurately determine the vehicle's location.

Id. at 2:60–3:2. The problem of GPS blackout areas affects railroad, automotive, and other vehicles that traverse such areas.

And although the claims recite "a rail vehicle," the claimed aspects are generally directed to broadly applicable functionality. *See* Ex. 1001, 30:44–33:31. The claimed CAS and features measure distances between objects that are "rail vehicles" and issue warnings without claiming any implementation that is particular to railroad technologies, practices, or problems.

The '131 patent describes "rail vehicles" that include *hyrail trucks* that travel on *roads* and tracks. *See* Ex. 1001, 3:46–58, Figs. 1C, 2 (vehicle 204). *Specific spacing* must "be maintained between vehicles when traveling to/from work sites and when working at a work site." *Id.* at 1:41–55; *see id.* at 3:46–63, Fig. 2; Ex. 1003 ¶ 217; Ex. 1008, 209–210; Ex. 1005, Figs. 1A, 17.

Similar to the '131 patent, the asserted prior art indicates that vehicle and train collision avoidance systems both use radio and GPS sensor technologies to determine locations, speeds, and separation distances to avoid collisions by warning operators. Ex. 1005 ¶¶ 13–42 (using GPS to determine position and in-vehicle radar for separation distance for warning if less than a predetermined distance), 55–63 (using UWB radio to manage a car platoon); Ex. 1006, 18:53–24:36 (using impulse radio units as transceivers on rail vehicles, trains, railroad poles, and passenger vehicles to measure separation distances and warn operators), Figs. 11–22; Ex. 1016, 3–8 (using UWB and GPS sensors to warn vehicle operators of nearby trains, airplanes, boats, ships, snowmobiles, and ATVs).

We are not persuaded by Patent Owner's argument that the level of skill art should be limited to experience with *railway* collision-avoidance systems or *railway* positioning systems. PO Resp. 4. Accordingly, Patent Owner's related argument that a person of ordinary skill in the art of the '131 patent is resistant to change and innovation is also unpersuasive.

On the complete record, we find Petitioner's proposed level of skill in the art to be proper and adopt it for the purposes of this Decision. *See Best Med. Int'l, Inc. v. Elekta Inc.*, 46 F.4th 1346, 1353 (Fed. Cir. 2022) (listing factors to assess the level of skill in the art as types of prior art problems and solutions, sophistication of technology, speed of innovations, and education level of the inventor and workers in the field). We note, however, that Patent Owner does not point us to any *specific* issues that would be resolved differently under its proposed level of skill. Our analysis would therefore remain the same even under Patent Owner's proposed level.

B. Claim Construction

We interpret claims using the same claim construction standard that would be used to construe the claims in a civil action held under 35 U.S.C. § 282(b). 37 C.F.R. § 42.100(b). Under this standard, we construe claims "in accordance with the ordinary and customary meaning of such claim as understood by one of ordinary skill in the art and the prosecution history pertaining to the patent." *Id.* We construe the claims only to the extent necessary to determine whether to institute *inter partes* review. *See Nidec Motor Corp. v. Zhongshan Broad Ocean Motor Co.*, 868 F.3d 1013, 1017 (Fed. Cir. 2017) ("[W]e need only construe terms 'that are in controversy, and only to the extent necessary to resolve the controversy.'") (quoting *Vivid Techs., Inc. v. Am. Sci. & Eng'g, Inc.*, 200 F.3d 795, 803 (Fed. Cir. 1999)).

Petitioner asserts that no express claim constructions are needed for this proceeding. Pet. 8. Patent Owner does not propose claim constructions for any terms. *See generally* PO Resp. Based on our review of the complete record and the issues before us, we see no need to provide an express construction of any term.

C. Principles of Law

As set forth in 35 U.S.C. § 103(a),

> [a] patent may not be obtained . . . if the differences between the subject matter sought to be patented and the prior art are such that the subject matter as a whole would have been obvious at the time the invention was made to a person having ordinary skill in the art to which said subject matter pertains.

The question of obviousness is resolved on the basis of underlying factual determinations including: (1) the scope and content of the prior art; (2) any differences between the claimed subject matter and the prior art; (3) the level of ordinary skill in the art; and (4) when in evidence, objective evidence of nonobviousness. *Graham v. John Deere Co.*, 383 U.S. 1, 17–18 (1966). An obviousness analysis "need not seek out precise teachings directed to the specific subject matter of the challenged claim, for a court can take account of the inferences and creative steps that a person of ordinary skill in the art would employ." *KSR Int'l Co. v. Teleflex Inc.*, 550 U.S. 398, 418 (2007). However, Petitioner cannot satisfy its burden of proving obviousness by employing "mere conclusory statements." *In re Magnum Oil Tools Int'l, Ltd.*, 829 F.3d 1364, 1380 (Fed. Cir. 2016). Instead, Petitioner must articulate a reason why a person of ordinary skill in the art would have combined the prior art references. *In re NuVasive*, 842 F.3d 1376, 1382 (Fed. Cir. 2016).

D. Ground 1A: Alleged Obviousness Over Grisham

Petitioner asserts that claims 1, 11, and 14 are unpatentable under § 103(a) over Grisham. Pet. 1, 3, 9–20.

1. Grisham (Ex. 1006)

Grisham describes railroad collision avoidance system 900f that can equip two locomotives 1102, 2102 with transmitting and receiving impulse radio units 902, 904 that transmit impulse radio signals 910 to alert operators of each vehicle of the presence of the other vehicle. Ex. 1006, 23:33–24:29.

Figure 21 of Grisham is reproduced below to illustrate this arrangement.

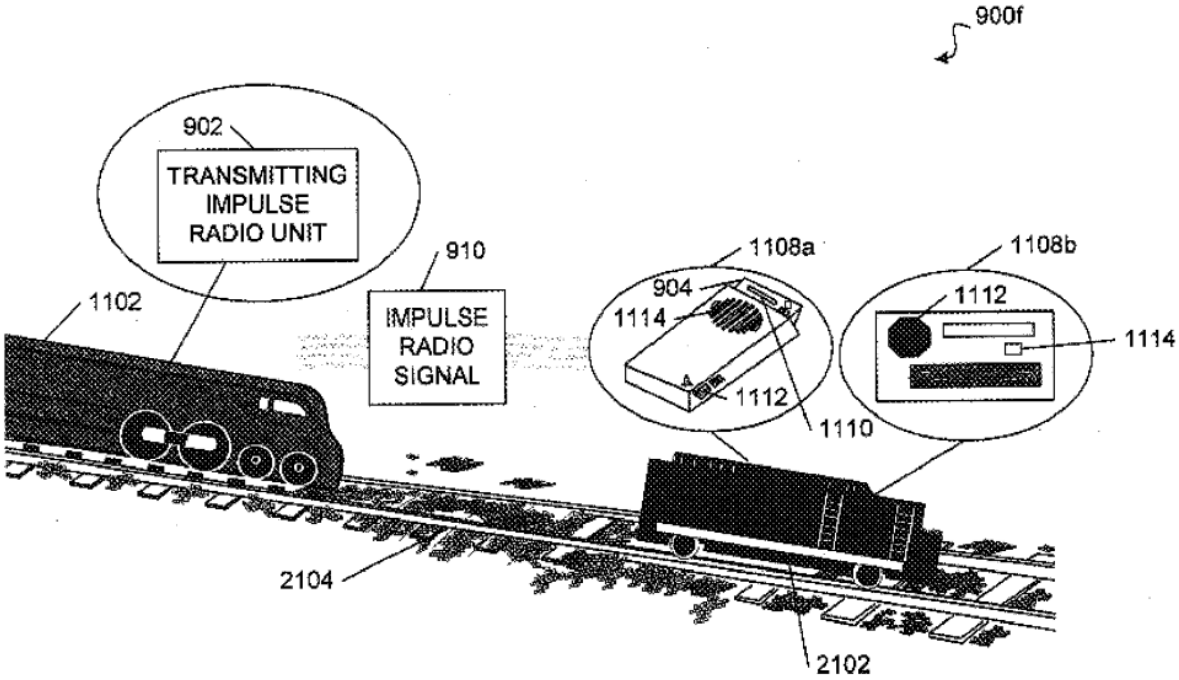

FIG. 21

Figure 21 depicts warning system 900f with transmitting impulse radio unit 902 coupled to locomotive 1102 to send radio signals 910 to receiving impulse radio unit 904 on second locomotive 2102 to alert persons there of the direction, distance, and/or speed of first locomotive 1102, and

both locomotives 1102, 2102 may contain the same equipment so each may be notified of the presence and speed of the other via an after-market display 1108a or in-dash display 1108b. Ex. 1006, 23:33–24:29.

Figure 22 of Grisham is reproduced below.

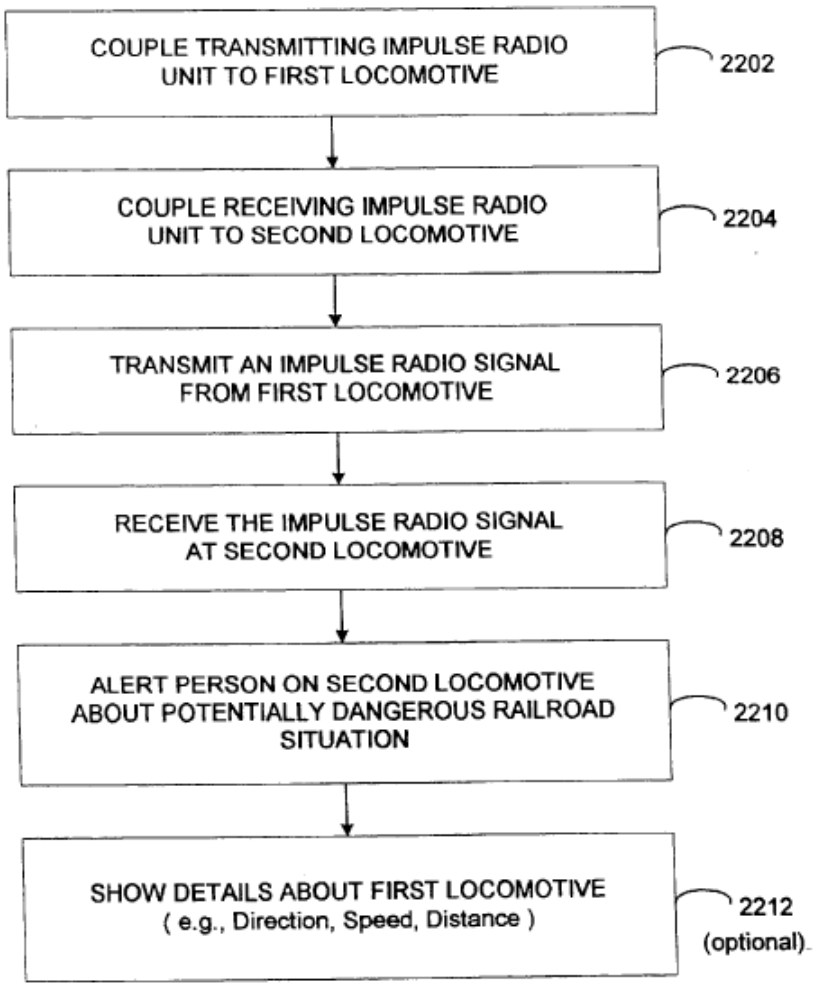

FIG. 22

Figure 22 depicts a flowchart showing Grisham's method to alert a person on a second locomotive about the presence of a first locomotive. Ex. 1006, 23:33–24:29.

2. Independent Claim 1

a. Preamble 1-Pre

Regarding element 1-Pre, Petitioner contends that Grisham discloses a railroad collision avoidance system for preventing train accidents. Pet. 10 (citing Ex. 1006, code (54), 2:16–31, 24:46; Ex. 1003 ¶¶ 100–104). This contention, which Patent Owner does not contest, is supported by evidence of record.

Grisham's field of invention is "a railroad collision avoidance system and method for preventing train accidents." Ex. 1006, 1:8–10; *id.* at 2:16–19 (the invention is a railroad collision avoidance system that warns people when a locomotive is in their vicinity).

Accordingly, we find that Grisham teaches the preamble.

b. Limitations 1A and 1E

Regarding elements 1A and 1E, Petitioner asserts that Grisham mounts radio units 902, 904 on each locomotive 1102, 2102 (rail vehicles), and each unit includes components recited in elements 1B–1D and 1F–1H to form a vehicle mounted module. Pet. 11–12 (citing Ex. 1006, 23:33–38, Figs. 21, 22; Ex. 1003 ¶¶ 105–117), 14–15 (citing Ex. 1006, 23:33–40, Figs. 21, 22; Ex. 1003 ¶ 118). These contentions, which Patent Owner does not contest, are supported by record evidence. Grisham couples a transmitting impulse radio unit 902 and receiving impulse radio unit 904 to each locomotive 1102, 2102 to alert operators of the presence and speed of the other locomotive. Ex. 1006, 23:33–24:28, Figs. 21, 22.

Accordingly, we find that Grisham teaches these limitations.

c. Limitations 1B and 1F

Regarding elements 1B and 1F, Petitioner asserts that Grisham uses transmitting impulse radio unit 902 and receiving impulse radio unit 904 to send and receive signals, and the radio units 902, 904 may be combined into a transceiver impulse radio unit mounted on each locomotive 1102, 2102 to send and receive data wirelessly thereby achieving substantial economy over separate transmit/receive impulse radios and forming a "transponder sensor module." Pet. 12–13 (citing Ex. 1006, 16:39–49, 16:59–60, 17:44–46, 23:33–47, Figs. 6, 7; Ex. 1003 ¶¶ 107–110), 15 (citing element 1B; Ex. 1003 ¶ 119). Petitioner asserts that an ordinarily skilled artisan would have understood that Grisham's impulse radio in each transceiver unit and its antenna are a first and second radio communication unit and a first and second antenna as claimed. *Id.* at 13 (citing Ex. 1003 ¶¶ 107–110), 15 (citing Ex. 1003 ¶ 119).

These contentions, which Patent Owner does not contest, are supported by record evidence. Grisham describes an "Exemplary Transceiver Implementation" that comprises a "Transmitter" *and* a "Receiver." Ex. 1006, 16:14–17:43. "In a *transceiver embodiment*, substantial economy can be achieved by sharing part or all of several of the functions of the transmitter 602 and receiver 702" and shared functions include "time base 718, precision timing generator 714, code source 722, [and] *antenna 704*." *Id.* at 17:44–48 (emphasis added). Grisham therefore teaches a *transceiver embodiment*. *See id.* at 16:14–17:48; Pet. 12–13 (citing Ex. 1006, 17:44–46; Ex. 1003 ¶ 108 (citing Ex. 1006, 17:44–48)).

Figure 21 of Grisham mounts transmitting impulse radio unit 902 and receiving impulse radio unit 904 on each locomotive 1102, 2102 to function

as transceivers that send and receive radio signals. *See* Ex. 1006, 23:33–24:29, 16:14–17:48.

Grisham describes mounting transmitting impulse radio unit 902 on locomotive 1102 to transmit impulse radio signal 910 to receiving impulse radio unit 904 on locomotive 2102 (Ex. 1006, 23:33–63) and states that "[i]t should be understood that the first locomotive 1102 can contain the same equipment as the second locomotive 2102 . . . and as such could be notified of the presence and speed of an oncoming second locomotive 2102" (*id.* at 24:24–29). Each locomotive 1102, 2102 has transmitting *and* receiving impulse radio units that function as transceivers to send and receive data as impulse radio signals 910 to notify operators on each locomotive of the presence and speed of the other locomotive to achieve substantial economy.

Mr. Andrews persuasively testifies that Grisham combines transmitter 602 and receiver 702 into transceiver units that transmit and receive as a transponder. Ex. 1003 ¶¶ 107–110 (embodiments transmit and receive as transceivers).

Accordingly, we find that Grisham teaches these limitations.

d. Limitations 1C and 1G

Regarding elements 1C and 1G, Petitioner asserts that Grisham teaches a control electronics module as controller 1110 in each transponder sensor module of elements 1B and 1F, and a person of ordinary skill in the art would have understood that controller 1110 includes a processor or would have been motivated to include one to process data it receives, and controller 1110 (and processor) communicate with receiving impulse unit 904 in each transponder sensor module to communicate with other radio

units via impulse radio signal 910. Pet. 13 (citing Ex. 1006, 23:64–24:24, Fig. 22; Ex. 1003 ¶¶ 111–114), 16 (citing element 1C; Ex. 1003 ¶ 120).

These contentions, which Patent Owner does not contest, are supported by evidence of record. Receiving impulse unit 904 and controller 1110 in each transponder sensor module receive impulse radio signals 910 that controller 1110 processes to measure distances between locomotives 1102, 2102. Ex. 1006, 23:66–24:8.

Accordingly, we find that Grisham teaches these limitations.

e. Limitations 1D and 1H

Regarding elements 1D and 1H, Petitioner contends that Grisham's receiving impulse unit 904 may be incorporated in, or coupled to, an after-market display 1108a or an in-dash display, which provides a user interface module that displays direction, distance, and speed of an oncoming train to an operator *and* receives operator input to communicate with a person on another train, and such displays receive user input to adjust display settings. Pet. 13–14 (citing Ex. 1006, 23:52–66, Fig. 21; Ex. 1003 ¶¶ 115–117), 16 (citing element 1D; Ex. 1003 ¶ 121).

These contentions, which Patent Owner does not contest, are supported by record evidence. Grisham's receiving impulse radio unit 904 includes a user interface module and after-market or in-dash display 1108a, 1108b that alerts operators of locomotive 1102/2102 of the presence of an approaching locomotive 2102/1102 with the direction, distance, and/or speed of the locomotive. Ex. 1006, 23:33–24:29; *see* Pet. 14 (citing Ex. 1006, 23:52–66, Fig. 21); Ex. 1003 ¶ 116 (quoting Ex. 1006, 23:52–66 and its description of displays 1108a, 1108b that show direction, distance, and/or speed of an oncoming locomotive 1102).

Display 1108 also receives input from an operator to communicate with a person on another locomotive via impulse radio signals. Ex. 1006, 19:51–54, 23:1–4, 23:60–63 (cited in Pet. 14 and Ex. 1003 ¶ 116).

Grisham's display receives input of operators to communicate with operators on other trains. Pet. 14, 16; Ex. 1003 ¶ 116. Mr. Andrews testifies that such "after-market" displays are known to receive user input to adjust display settings. Ex. 1003 ¶ 117. Mr. Andrews supports his opinion with Grisham's disclosure that after-market displays allow operators to communicate with operators of other vehicles so the user interface receives user inputs. *Id.* ¶¶ 116–117 (citing Ex. 1006, 23:52–66).

Accordingly, we find that Grisham teaches these limitations.

f. Limitation 1I

Regarding element 1I, Petitioner asserts that impulse radio unit 902 mounted on a first train continually transmits a radio signal to impulse radio unit 904 on another train. Pet. 16–18 (citing elements 1A, 1B; Ex. 1006, 22:45–49, 23:36–49, 24:25–29, Figs. 19, 21; Ex. 1003 ¶¶ 122–124). These contentions, which Patent Owner does not contest, are supported by evidence of record. Impulse transceivers on different trains communicate with one another. Ex. 1006, 16:14–17:48, 18:53–24:29, Figs. 21, 22.

Accordingly, we find that Grisham teaches this limitation.

g. Limitation 1J

Regarding element 1J, Petitioner contends that Grisham's radio-unit controllers use time position measurements to measure a propagation delay and determine a link distance between impulse radio units and locomotives, and the time of flight (TOF) technique incorporates Richards (Ex. 1013 (US Patent No. 6,133,876)) and its pulse sequences between two transceivers to

measure total TOF difference using two signal pulses.[12] Pet. 18–19 (citing Ex. 1006, 14:56–62, 24:18–24, Figs. 21, 22; Ex. 1013, 2:31–46; Ex. 1003 ¶¶ 125–127).

Petitioner's contention, which Patent Owner does not contest, are supported by evidence of record. Accordingly, we find that Grisham teaches this limitation.

On this record, we find Petitioner has established by a preponderance of the evidence that Grisham teaches each of the limitations of claim 1. As to Ground 1A, Patent Owner argues *only* that the evidence of objective indicia of the claimed invention is sufficient to overcome Petitioners showing that claim 1 is obvious.[13] PO Resp. 8; Pet. Reply 12 ("Metrom admits claims 1, 11, and 14 are *prima facie* obvious by only arguing secondary considerations."). We address Patent Owner's secondary consideration arguments below.

---

[12] Petitioner asserts that "Richards explains TOF is calculated using two sequences of pulses between two transceivers," measuring "a time difference between the delayed first reference signal and the first refence signal," as "the 'total time of flight' of the sequences and the distance between the transceivers is determined from the time difference." Pet. 18–19 (citing Ex. 1013, 2:31–46; Ex. 1003 ¶¶ 125–126).

[13] In its Sur-reply, Patent Owner states "[n]either the Petition nor the Reply articulated a motivation to modify Grisham (Ground 1A) to arrive at the claimed invention." PO Sur-reply 25. We consider Patent Owner's new argument raised in Patent Owner's Sur-reply to be untimely. *See NuVasive*, 842 F.3d at 1380–81 (holding that the patent owner waived arguments that were not raised in its response after institution); Paper 11, 9 ("Patent Owner is cautioned that any arguments not raised in the response may be deemed waived."). Even if not waived, Patent Owner's argument is unclear in that it does not point us to any particular deficiency in Petitioner's contentions as to Ground 1A, and none of those contentions require modifying Grisham to arrive at the claimed invention. Pet. 9–19.

h. Objective Indicia of Non-Obviousness

Objective indicia of nonobviousness (also referred to as secondary considerations) may include long-felt but unsolved need, failure of others, unexpected results, commercial success, copying, licensing, industry praise, and expert skepticism. *Mintz v. Dietz & Watson, Inc.*, 679 F.3d 1372, 1379 (Fed. Cir. 2012). Objective indicia are "only relevant to the obviousness inquiry 'if there is a nexus between the claimed invention and the [objective indicia of nonobviousness].'" *In re Affinity Labs of Tex., LLC*, 856 F.3d 883, 901 (Fed. Cir. 2017) (quoting *Ormco Corp. v. Align Tech., Inc.*, 463 F.3d 1299, 1312 (Fed. Cir. 2006)); *see also ClassCo, Inc. v. Apple, Inc.*, 838 F.3d 1214, 1220 (Fed. Cir. 2016). As the Federal Circuit recently explained, "a patentee is entitled to a rebuttable presumption of nexus between the asserted evidence of secondary considerations and a patent claim if the patentee shows that the asserted evidence is tied to a specific product and that the product 'is the invention disclosed and claimed.'" *Fox Factory, Inc. v. SRAM, LLC*, 944 F.3d 1366, 1373 (Fed. Cir. 2019), *cert. denied*, 141 S. Ct. 373 (2020) (*quoting Demaco Corp. v. F. Von Langsdorff Licensing Ltd.*, 851 F.2d 1387, 1392 (Fed. Cir. 1988)). That is, presuming nexus is appropriate "when the patentee shows that the asserted objective evidence is tied to a specific product and that product 'embodies the claimed features, and is coextensive with them.'" *Id.* (*quoting Polaris Indus., Inc. v. Arctic Cat, Inc.*, 882 F.3d 1056, 1072 (Fed. Cir. 2018)). On the other hand, the patentee is not entitled to a presumption of nexus if the patented invention is *only a component* of a commercially successful machine or process. *Id.* (reaffirming the importance of the "coextensiveness" requirement).

Applying *Fox Factory*, the Board uses a two-step analysis in evaluating nexus between the claimed invention and the evidence of

secondary considerations. *Lectrosonics, Inc. v. Zaxcom, Inc.*, IPR2018-01129, Paper 33 at 33 (PTAB Jan. 24, 2020) (precedential). We first consider whether the patent owner has demonstrated "that its products are coextensive (or nearly coextensive) with the challenged claims," resulting in a rebuttable presumption of nexus. *Id.* If not, that "does not end the inquiry into secondary considerations"; "the patent owner is still afforded an opportunity to prove nexus by showing that the evidence of secondary considerations is the 'direct result of the unique characteristics of the claimed invention.'" *Id*. (*quoting Fox Factory*, 944 F.3d at 1373–75).

Once a patent owner has demonstrated that it is entitled to a presumption of nexus, the challenger may rebut the presumption by adducing evidence showing that the objective indicia was due to extraneous factors other than the patented invention. *Demaco*, 851 F.2d at 1392–93.

Patent Owner argues that there is evidence of commercial success, a long-felt need, industry skepticism, and copying of the claimed invention. PO Resp. 6–15. Patent Owner's evidence is based on its commercial collision avoidance system ("the AURA CAS"). Patent Owner asserts that it sets out

> substantial evidence of secondary considerations regarding Metrom's commercial embodiment, the AURA CAS, including how the industry has had a *long felt* need for better collision avoidance, how Metrom's patented solution was viewed by industry participants with *skepticism*, was nevertheless ultimately *commercially successful*, and was subsequently *praised* in the industry and *copied* by Petitioner Piper Networks "Helix" CAS.

Id. at 8. We first address whether Patent Owner has established a nexus between the claimed invention and the submitted evidence.

(1) Nexus

Patent Owner argues that Dr. Cooklev compared claims 1 and 7 of the '131 patent to Metrom's AURA CAS and concluded that the AURA CAS is "the invention disclosed and claimed" at least by claims 1 and 7 of the '131 patent. PO Resp. 14–15 (citing Ex. 2011 ¶ 41; Ex. 2023, 1–6 (claim chart mapping claims 1 and 7 to the AURA CAS)). Specifically, as to commercial success, Patent Owner contends that Dr. Cooklev interviewed Metrom's employees to determine the features of the AURA CAS responsible for its commercial success, and concluded that commercial success of the AURA CAS was tied directly to the claimed features and not to any significant unclaimed features. *Id.* at 15 (citing Ex. 2011 ¶ 41). Patent Owner thus contends that this "establishes a rebuttable presumption of nexus between the evidence of objective indicia and at least Challenged Claims 1 and 7." *Id.*

Petitioner responds that Patent Owner's secondary-considerations arguments are factually and legally flawed, and are insufficient to overcome the Petition's strong showing of obviousness. Pet. Reply 3 (citing *Dow Chem. Co. v. Halliburton Oil Well Cementing Co.*, 324 U.S. 320, 330 (1945). Specifically, with respect to commercial success, Petitioner responds that Patent Owner "cannot demonstrate 'that the driving force behind' AURA's sales was due to unique characteristics of the claimed invention because none exist." *Id.* at 8 (citing *In re DBC*, 545 F.3d 1373, 1384 (Fed. Cir. 2008)). Petitioner argues that there is no nexus because Patent Owner has failed to show that AURA practices any claim, and that Patent Owner's claim chart and Dr. Cooklev's testimony are insufficient. *Id.* at 8–9 (citing Ex. 2011 ¶ 41; Ex. 1051, 92:3–19). Petitioner further contends that "AURA is not coextensive because it has unclaimed features that are

responsible for its alleged success." *Id.* at 9 (citing *Fox Factory*, 944 F.3d at 1373). Petitioner asserts that Patent Owner's exhibits describe "extensive unclaimed and material features in AURA" that were important to Metrom's customers. *Id.* Specifically, Petitioner lists the following features:

- "operator-defined detection and alarm criteria, with integrated, expandable hardware options;"
- "key machine function monitoring" (e.g., gas consumption);
- "remote data recording";
- "customizable user interface";
- "aluminum and specific molded Radome materials";
- "adaptive spacing limits" with "three modes" of equipment speed; and
- "integrated data recorder."

Id. (citing Ex. 2016, 1–6; Ex. 2019, 1–4; Ex. 1054, 125:20–141:7). Petitioner argues that "Dr. Cooklev's analysis is legally insufficient because he assumed that any product that met a claim was in fact coextensive with it, regardless of whether it had additional features," "boil[ing] coextensiveness down to infringement." *Id.* at 10 (citing Ex. 1051, 117:5–10). Petitioner contends that Patent Owner's only evidence that unclaimed features are irrelevant to AURA's success is Dr. Cooklev's conclusion, which is factually insufficient as it is based entirely on conversations with Messrs. Gunther and Marchi, without independent analysis. *Id.* (citing Ex. 2011 ¶ 41).

(a) Patent Owner Has Not Established that it is Entitled to a Presumption of Nexus

We determine that Patent Owner has not demonstrated that it is entitled to a presumption of a nexus between the evidence presented and

claims 1 or 7 of the ’131 patent. We agree with Petitioner that Patent Owner has failed to demonstrate that the AURA CAS is coextensive (or nearly coextensive) with the either those claims. As Petitioner points out, Patent Owner’s attempt to map the two claims to the AURA system—similar to showing infringement—shows only that the AURA *embodies* the claimed invention; it is not sufficient to show coextensiveness. Pet. Reply 10. Instead, the Federal Circuit has explained that coextensiveness requires “that the patentee demonstrate that the product *is essentially* the claimed invention.” *See Fox Factory*, 944 F.3d at 1374 (quoting *Demaco*, 851 F.2d at 1392) (“[T]he purpose of the coextensiveness requirement is to ensure that nexus is only presumed when the product tied to the evidence of secondary considerations ‘*is* the invention disclosed and claimed.’”) (emphasis added). Here, the AURA CAS *is not* the invention disclosed and claimed; it is significantly more than what is recited in the claims. As Petitioner points out, Patent Owner’s own marketing materials list quite a few other components and features that are part of the system—aspects of the system that Patent Owner *itself* highlights in marketing the system to its customers. Pet. Reply 9; *see generally* Ex. 2016, 1–6.

Patent Owner argues that perfect correspondence between the claimed invention and the AURA CAS is not required to establish coextensiveness. PO Sur-reply 19. We agree. The Federal Circuit, however, has explained that where such a correspondence is not established, presuming nexus may be appropriate *only* “if the unclaimed features amount to nothing more than additional insignificant features.” *See Fox Factory*, 944 F.3d at 1374. We are not persuaded that the features identified by Petitioner are indeed mere additional *insignificant features* in the manner argued by Patent Owner. *See* PO Sur-reply 19. Patent Owner’s CEO testified that the additional features

identified by Petitioner are important and commercially significant components or features of the AURA CAS. For example, the first page of the AURA marketing material lists productivity tool options such as key machine function monitoring and remote data reporting in addition to location tracking. Ex. 2016, 1. Mr. Marchi testified that key machine function monitoring could include "tracking gas consumption on a piece of equipment, how many cycles a spike or a tamper provided in a course of one workday." Ex. 1054, 128:2–9. Similarly, he testified that remote data recording provides "the ability to provide [customers] software where they would actually be able to tap into that information remotely." *Id.* at 128:15–129:1. He further testified that the AURA CAS includes an integrated data recorder with an internal accelerometer that automatically records data when a high g-force event is detected, "like a black box." *Id.* at 137:23–138:8. Mr. Marchi's testimony demonstrates that these are important features or components. *Id.* at 128:10–129:4, 138:9–11; *see generally id. at* 125:20–141:7. Although on redirect Mr. Marchi attempted to walk back the testimony that these are important aspects of the AURA CAS (*id.* at 146:22–147:19), we are persuaded that his testimony at least supports that these are not *insignificant* components or features, which is a sufficient determination for the purposes of the coextensiveness inquiry.[14]

We also find Dr. Cooklev's declaration insufficient to establish coextensiveness. *See* Pet. Reply 10. Patent Owner asserts that "Dr. Cooklev

[14] Because we determine that Petitioner has pointed to additional components/features of the AURA CAS that are sufficiently significant to reject Patent Owner's argument for presuming nexus, we do not address the remaining features on Petitioner's list of additional unclaimed features. Pet. Reply 9 (citing Ex. 2016).

concluded that the AURA CAS *is* 'the invention disclosed and claimed,' at least by Challenged Claims 1 and 7 of the '131 patent." PO Resp. 14 (emphasis added). Patent Owner, however, does not cite to Dr. Cooklev's declaration for that assertion, and we do not find such testimony anywhere in Dr. Cooklev's declaration. *See generally* Ex. 2011 ¶ 41. Instead, Dr. Cooklev merely testifies that "that there is a high degree of correspondence between the AURA CAS and claims 1 and 7." *Id.* He does not testify that AURA CAS *is* (or is close to) the patented invention or address the components or features, not recited in the claims, identified by Petitioner, that are also part of the AURA CAS. *Id.* For the purposes of establishing a presumption of nexus, it is not enough that the AURA CAS embodies the patented features. *See Volvo Penta of the Americas, LLC v. Brunswick Corp.*, 81 F.4th 1202, 1211 (Fed. Cir. 2023) (explaining that it is not enough that the commercial product embody the claimed invention; "coextensiveness is a separate requirement"); *Fox Factory*, 944 F.3d at 1376 (rejecting the argument that the existence of unclaimed features in a commercial product is irrelevant to the question of whether nexus can be presumed between that product and a patent claim). Patent Owner's argument that "Dr. Cooklev mapped Challenged Claims 1 and 7 to the features of the AURA CAS and concluded that the features of the AURA CAS were coextensive with these claims," (PO Resp. 14–15) therefore misunderstands the requirement for showing coextensiveness under the Federal Circuit's precedent.

Patent Owner does not provide an analysis demonstrating that the AURA CAS is coextensive (or nearly coextensive) with the challenged claims. We, therefore, find that a presumption of nexus is inappropriate.

(b) Patent Owner Has Not Established Nexus Separate from the Presumption

Even absent a presumption of nexus, "the patent owner is still afforded an opportunity to prove nexus by showing that the evidence of secondary considerations is the '*direct result of the unique characteristics* of the claimed invention.'" *Fox Factory*, 944 F.3d at 1373–74 (quoting *In re Huang*, 100 F.3d 135, 140 (Fed. Cir. 1996)) (emphasis added). "Where the offered secondary consideration actually results from something other than what is both claimed and *novel* in the claim, there is no nexus to the merits of the claimed invention," meaning that "there must be a nexus to some aspect of the claim not already in the prior art." *In re Kao*, 639 F.3d 1057, 1068–69 (Fed. Cir. 2011).

Patent Owner fails to clearly articulate how its evidence of objective indicia of nonobviousness is the *direct* result of the *unique* characteristics of the claimed invention. PO Resp. 14–15; PO Sur-reply 18–19. Patent Owner's arguments refer generally to the "claimed features" without specifically identifying what is *novel* in the claims that can be tied to the evidence of the secondary considerations. For example, Patent Owner argues that "Dr. Cooklev concluded that commercial success of the AURA CAS was directly tied to the claimed features and not to any significant unclaimed features" (PO Resp. 15) but does not explain which of the claimed features resulted in the commercial success. As Petitioner points out, "if the feature that creates the commercial success was known in the prior art, the success is not pertinent." Pet. Reply 8 (citing *Ormco*, 463 F.3d at 1312). Here, claims 1 and 7 are the only claims that Patent Owner relies on as establishing nexus, but Patent Owner does not dispute that Grisham teaches each of the limitations of claim 1 under Petitioner's Ground 1A. *See*

PO Resp. 6–11 (arguing only secondary considerations as to Ground 1A). Nor does Patent Owner dispute that the global positioning system (GPS) technology recited in claim 7 is not novel. *See id.* at 25–28 (arguing only motivation to combine the asserted reference as to Ground 2A). It is therefore unclear to us which aspect of the claimed invention is being argued by Patent Owner as the driving force behind the secondary considerations evidence that Patent Owner relies on.

Nor does Dr. Cooklev's declaration separately identify any unique characteristics. Dr. Cooklev testifies that "[b]ased on [his] discussions with Mr. James Marchi, [he] understand[s] that the claimed features of the AURA CAS are the features that drive demand for the AURA CAS." Ex. 2011 ¶ 41; *see also* Ex. 1051, 92:3–93:1; Ex. 1054, 147:16–19 (Mr. Marchi's testimony). But that is not sufficient to meet Patent Owner's burden. *See Fox Factory*, 944 F.3d at 1373 ("The patentee bears the burden of showing that a nexus exists.") (quoting *WMS Gaming Inc. v. Int'l Game Tech.*, 184 F.3d 1339, 1359 (Fed. Cir. 1999)).

At oral argument, Patent Owner argued that we should ignore the fact that Grisham teaches each of the limitations of claim 1 because there was never a commercial embodiment of Grisham's invention or because the secondary considerations evidence here is overwhelming. *See, e.g.*, Tr. 53:11–54:11 (arguing that "Grisham went into the drawer"). Those considerations, however, cannot factor into our nexus analysis. *See, e.g.*, *Yita LLC v. MacNeil IP LLC*, 69 F.4th 1356, 1364 (Fed. Cir. 2023) (explaining that nexus is lacking where claimed feature relied upon for establishing nexus was *known* in the prior art, even if it was *not well-known*).

We are also cognizant of Federal Circuit precedent that a nexus analysis need not be limited to a discussion of *only* novel features. *See*

Volvo, 81 F.4th at 1212 (citing *WBIP, LLC v. Kohler Co.*, 829 F.3d 1317, 1330 (Fed. Cir. 2016); *Chemours Co. FC, LLC v. Daikin Indus., Ltd.*, 4 F.4th 1370, 1377 (Fed. Cir. 2021); *Yita*, 69 F.4th at 1364 (Fed. Cir. 2023)). But even in those instances, Patent Owner's secondary considerations evidence needs to "be linked to an 'inventive combination of known elements' to show a sufficient nexus." *Chemours* at 1378. Patent Owner does not argue that any *inventive* combination of known elements supports a finding of nexus, and as discussed above, the claims relied on by Patent Owner do not present an inventive combination of known elements from the prior art—e.g., each of the limitations of claim 1 are undisputedly taught by Grisham. Patent Owner argues "Petitioners do not dispute that the success of the AURA system is substantially because of the patented features." PO Sur-reply 19. But Petitioner does dispute that any patented features included within AURA are novel or non-obvious, or are the driving force behind AURA's success. *See* Pet. Reply 8 ("Metrom cannot demonstrate 'that the driving force behind' AURA's sales was due to unique characteristics of the claimed invention because none exist."); *id.* ("Metrom fails to show that AURA practices any claim.").

Patent Owner also argues that "if Petitioners believed customer demand was driven by other, unpatented features, they had every opportunity to introduce their own evidence." But it is the Patent Owner that "bears the burden of showing that a nexus exists." *Fox Factory*, 944 F.3d at 1373 (quoting *WMS Gaming*, 184 F.3d at 1359). Once a patent owner has presented a *prima facie* case of nexus, the burden of coming forward with evidence in rebuttal shifts to the challenger to adduce evidence showing that the objective indicia was due to extraneous factors other than the patented invention. *Demaco*, 851 F.2d at 1392–93.

We, therefore, do not agree with Patent Owner that it has met its burden to establish a nexus between the merits of the claimed invention, as recited in any of the challenged claims, and the submitted evidence relating to long-felt need, skepticism, commercial success, industry praise, and copying. Absent a nexus, we determine that Patent Owner's evidence of objective indicia does not weigh in favor of nonobviousness.[15]

i. Conclusion as to Obviousness of Claim 1

"Once all relevant facts are found, the ultimate legal determination [of obviousness] involves the weighing of the fact findings to conclude whether the claimed combination would have been obvious to an ordinary artisan." *Arctic Cat v. Bombardier Recreational Prod. Inc.*, 876 F.3d 1350, 1361 (Fed. Cir. 2017). On balance, considering the complete record before us, Petitioner has established, by a preponderance of the evidence, that Grisham would have rendered the subject matter of claim 1 obvious to one of ordinary skill in the art at the time of the invention.

3. Claims 11 and 14

Regarding claims 11 and 14, Petitioner asserts that Grisham discloses vehicle-mounted radio units with controllers and ultra-wideband units that communicate with each other to determine the speed of a rail vehicle, can be mounted on a control box or railroad pole (claim 11), and that the radio units use "a desired center frequency" by altering the waveform significantly for a given application, which a person of ordinary skill in the art would

[15] Our determination as to Patent Owner's objective indicia evidence applies equally to each of Petitioner's obviousness grounds discussed below where Patent Owner argues that we consider Patent Owner's objective indicia evidence.

have understood to mean the radio units are designed to transmit and receive ultrawide-band signals of varying center frequencies (claim 14). Pet. 19–20 (citing discussion for elements 1B, 1C, and 1E in Ground 1A for claim 11; Ex. 1006, 14:56–62, 18:60–19:4, 23:64–24:24; Ex. 1013, 2:31–46; Ex. 1003 ¶¶ 125–130).

Patent Owner argues only that "[c]laims 11 and 14 depend from claim 1 and are not obvious because [in]dependent claim 1 is not obvious." PO Resp. 15.

We have reviewed Petitioner's arguments and evidence directed to claims 11 and 14, and we find that, on the complete record, Petitioner's challenge is supported sufficiently for the reasons provided by Petitioner, including those discussed above in the context of Petitioner's challenge to claim 1.

Petitioner persuasively shows that radio transceivers mounted on trains 1102, 2102 provide ground speed detection as Petitioner contends. Pet. 19; Ex. 1006, 23:33–24:29. Such ground speed detection can be placed in *a control box*, *railroad pole*, vehicle, or train. Ex. 1006, 18:53–19:4, Figs. 9–10. Impulse radio signals 910 are received by radio unit 904 and processed to determine a link distance between unit 904 and a train and distances are updated to determine the train's speed, which is displayed with its distance and direction. *Id.* at 23:64–24:24; *see* Pet. 13–14; Ex. 1003 ¶¶ 115–117 (citing Ex. 1006, 23:52–66). Mr. Andrews relies on Grisham's description of determining locomotive speed by radio unit 904, which may be mounted on second locomotive 2102, by receiving signals to determine distance from propagation delay and updating the distance to determine the train's presence and speed. Ex. 1003 ¶ 129 (citing Ex. 1006, 24:19–24).

Claim 14 recites a radio communication unit "is operable to transmit and receive signals with varying center frequencies." Ex. 1001, 32:20–22. Grisham's UWB units use an impulse radio waveform that "attempts to approach one cycle of radio frequency (RF) energy *at a desired center frequency*" and "this waveform may be altered significantly in practice for a given application." Ex. 1006, 4:61–5:12 (emphasis added) (cited in Pet. 20 and Ex. 1003 ¶ 129). Altering waveforms for a given application to be one cycle of RF energy at a desired center frequency varies the center frequency of the waveform, and Grisham's radio unit is operable to transmit and receive signals with varying center frequencies by calibrating it at a desired center frequency. *Id.*; *see also id.* at 5:1–2 ("waveforms having very broad, or wide, spectral bandwidth approximate a Gaussian shape to a useful degree"); *see id.* at 5:60–6:35, 7:50–57, Figs. 1A–1F.

On balance, considering the complete record before us, Petitioner has established, by a preponderance of the evidence, that Grisham would have rendered the subject matter of claims 11 and 14 obvious to one of ordinary skill in the art at the time of the invention.

E. Ground 1B: Alleged Obviousness Over Grisham and Douglas

Petitioner asserts the unpatentability of claims 2–4 under § 103(a) over Grisham and Douglas. *See* Pet. 2–3, 20–23.

1. Douglas (Ex. 1011)

Douglas's collision avoidance system equips trains with apparatus 20 (transceiver and processor) to enable them to communicate with each other over a wireless network and with apparatus 32 at station 30. Ex. 1011, 1:9–10, 3:1–30. Each train broadcasts a signal with a unique identification of the train and the track on which the train is moving using the transceivers

so a receiving apparatus 20 can identify the train transmitting the signal with its direction of motion and respective track. *Id.* at 3:31–47, Figs. 1, 1b.

Figure 1 of Douglas is reproduced below.

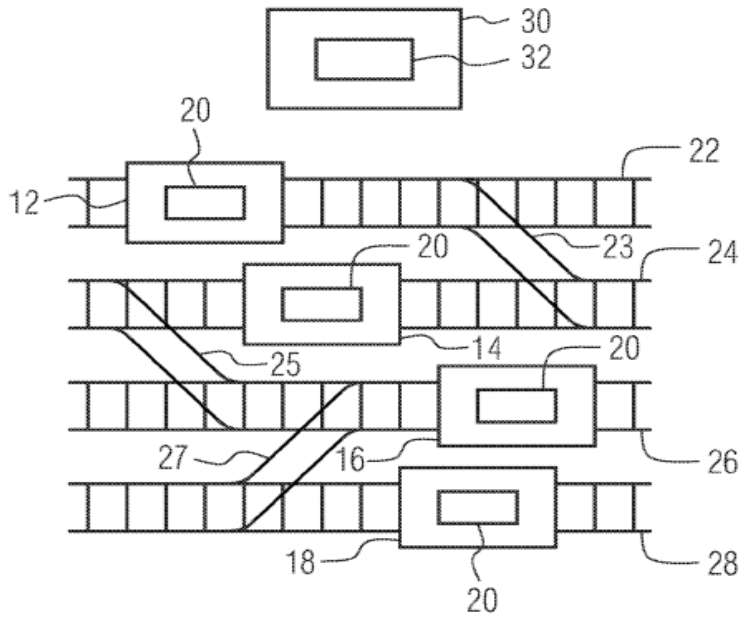

Figure 1 shows trains 12, 14, 16, 18, approaching station 30, that are provided with information of links 23, 25, 27 and tracks 22, 24, 26, 28, as well as a list including the links to be traversed and the direction of motion of each train. Ex. 10011, 4:33–37.

2. Claims 2–4

Regarding claim 2, Petitioner asserts that Douglas locates apparatus 32 at train station 30 to receive information transmitted by trains such as (a) the track a train is moving on and broadcasts locations of trains within a certain range by a list of links for a train to traverse and (b) direction of motion and path of a train. Pet. 20–21 (citing Ex. 1011, 3:18–23, 3:31–47, 4:23–49, 6:25–31, 7:10–12; Ex. 1003 ¶¶ 135–138). Petitioner asserts that an ordinarily skilled artisan would have understood that station-based apparatus 32 *tracks the location* of the trains by repeatedly updating their paths. *Id.* at

21. Petitioner asserts that a person of ordinary skill in the art would have been motivated to combine Douglas's apparatus with Grisham's train-to-train embodiment to use existing railway and train-control infrastructure to identify conflicts between paths of trains and potential collisions before trains enter the range where Grisham's train-to-train communication is effective. *Id.* (citing Ex. 1003 ¶ 139).

Patent Owner contends that neither Douglas nor Grisham discloses the additional limitation recited in claim 2 that "the central tracking unit is operable to track a location of the first vehicle mounted module and a location of the second vehicle mounted module." PO Resp. 15–16. Patent Owner argues that information broadcast by apparatus 32 is merely "the information of links and the list including the links to be traversed by the respective train and the direction of motion of the respective train," and is not "tracking information." *Id*. at 16–17 (citing Ex. 1011, 8:58–60, 9:1–5, Fig. 7c; Ex. 1003 ¶¶ 138–139; Ex. 2012 ¶ 56). Patent Owner argues that although Douglas is directed to collision avoidance, its method of collision avoidance does not require or use location information; instead, Douglas avoids collisions by ensuring that two trains are never on the same track. *Id.* at 17.

Patent Owner further contends that "[k]nowing the track ID and direction is not 'tracking the location' of a train any more than knowing that a car is taking Interstate 80 from Chicago to Denver tomorrow is 'tracking the location' of a traveler." PO Resp. 18 (citing Ex. 2012 ¶ 58). Patent Owner argues that Douglas is not concerned with separation distance or tracking location, and if two vehicles are on different tracks and with minimum separation distance, Douglas will not generate a warning. *Id.* at 18–19 (citing Ex. 1001, 6:37–41). According to Patent Owner, a person of

ordinary skill in the art, in combining Grisham and Douglas, would not have a reasonable expectation of arriving at the claimed invention. *Id.* at 19; *see also* PO Sur-reply 26–27.

Based on our review of the complete record, we are persuaded that Petitioner has shown that the combination of Grisham and Douglas teaches the additional limitations of claim 2.

Patent Owner's arguments are based on its contention that "the ['131] patent contemplates *precise* tracking of vehicles." PO Sur-reply 27 (emphasis added) (citing Ex. 1001, 21:32–33; 29:16–18).

The '131 patent specification describes central tracking unit (CTU) 318 accepting *information* such as location, speed, and separation distance from vehicle mounted modules (VMMs) in vehicles of a work gang. Ex. 1001, 6:25–36. "[T]he CTU may analyze *absolute and relative positioning data* and speed data from vehicles in the work gang." *Id.* at 6:36–38 (emphasis added). No technical implementation details are provided in the '131 patent specification. *See id.* at 4:26–30, 5:48–59, 6:4–7:8; 28:16–23, Fig. 3. Although the specification does state that "the CAS may be capable of precisely tracking the location," (*id.* at 21:32–35), and does so in some "situations," (*id.* at 29:16–19), the specification does not *require* any level of precision. *See, e.g., id.* at 13:9–12 ("relative location"), 26:50–54 ("reasonable calculation"). More importantly, the challenged claims do not require any particular precision for train "location." *See id.* at 31:13–20 ("the central tracking unit is operable to track a location of the first vehicle mounted module and a location of the second vehicle mounted module"); Pet. Reply 14.

Douglas describes apparatus 32 located at station 30 communicating with apparatuses 20 located on trains to receive information over a wireless

network from trains 12–18 (Ex. 1011, 3:18–30) including identification of each train, identification of the track on which each train is moving, and a direction of motion of each train (*id.* at 3:31–47) and to process this data to provide each train with a list of rail links and tracks each train will travel, the direction of movement of each train, and other trains *located in* the zone of station 30 (*id.* at 4:32–53, 7:10–12). *See* Pet. 20–21 (citations therein); Pet. Reply 14 (pointing out that Douglas only tracks links *no more than three kilometers* from the trains) (citing Ex. 1011, 9:23–36).

Douglas, therefore, tracks the locations of trains along specific tracks 22–28 relative to links 23–27 that connect specific tracks to allow a specific train to switch tracks at a particular location and within the limited zone of station 30. *See* Ex. 1011, 3:1–23. We are persuaded that the tracking of each train 12–18 and mounted apparatus 20 tracks location as recited in claim 2. Petitioner and Mr. Andrews rely on teachings of Douglas that apparatuses 20 on each train broadcast their ID, track ID, and direction of motion location information so apparatus 32 at station 30 can broadcast a list of links that each train will traverse with a *direction* of motion and list of trains *within* a zone (location) of station 30. *See id.* at 3:1–4:60, 6:63–7:23, Fig. 1; Pet. 20–21; Ex. 1003 ¶¶ 135–139. Mr. Andrews specifically testifies that "[b]ecause the list of links to be traversed by and the direction of motion of each train disclose the path of trains, a [person of ordinary skill in the art] would understand Douglas's station-based apparatus tracks the location of the trains by repeatedly updating the trains' paths." Ex. 1003 ¶ 138. We find this testimony persuasive in view of Douglas's disclosure as well as Douglas's stated goal of collision avoidance. *See* Ex. 1011, 7:20–23 ("If the conflict of state of any one of the links 23, 25, 27 is determined, then, at

block 71 an indication of a danger is provided in order to enable action to be taken to prevent the collision.”).

“The reasonable expectation of success requirement refers to the likelihood of success in combining references to meet the limitations of the claimed invention.” *Intelligent Bio-Sys., Inc. v. Illumina Cambridge Ltd.*, 821 F.3d 1359, 1367 (Fed. Cir. 2016) (“[F]ailure to consider the appropriate scope of the . . . patent’s *claimed invention* in evaluating the reasonable expectation of success . . . constitutes a legal error that [is] review[ed] without deference.”) (citation omitted) (alteration in orginal). The expectation of success need only be reasonable rather than absolute. *Pfizer, Inc. v. Apotex, Inc.*, 480 F.3d 1348, 1364 (Fed. Cir. 2007) (“[C]ase law is clear that obviousness cannot be avoided simply by a showing of some degree of unpredictability in the art so long as there was a reasonable probability of success.”).

We find that Douglas, similar to the ’131 patent, evidences a level of predictability in the art to implement a CAS with a central tracking unit that communicates with first and second VMMs to track the locations of the VMMs. On this record, we find that Petitioner has established by a preponderance of the evidence that claim 2 is unpatentable over Grisham and Douglas.

Regarding claims 3 and 4, Petitioner contends that Douglas discloses that a central tracking unit at a station *or* in apparatus 20 on each train 12–18 generates a state table of links for each train to travel between tracks and a direction of travel of each train on a track (claim 3), and the central tracking unit 32 at station 30 is in a discrete housing as shown in Figures 1 and 1b (claim 4). Pet. 22–23 (citing Ex. 1011, 3:1–30, 7:12–19; Ex. 1003

¶¶ 140–144). These contentions, which Patent Owner does not separately contest, are supported sufficiently by evidence of record.

Considering the complete record before us, Petitioner has established, by a preponderance of the evidence, that the combination of Grisham and Douglas would have rendered the subject matter of claims 2–4 obvious to one of ordinary skill in the art at the time of the invention.

F. Ground 1C: Alleged Obviousness Over Grisham and Richardson

Petitioner asserts the unpatentability of claims 5 and 6 under § 103(a) over Grisham and Richardson. *See* Pet. 2–3, 24–28.

1. Richardson (Ex. 1008)

Richardson describes a UWB positioning system that improves safety by positioning coordinate radios at each corner of a vehicle to provide more accurate position measurements between vehicles in a convoy. Ex. 1008, 209–210, 212–214, Figs. 1, 2, 6, 7.[16]

Figure 1 of Richardson is reproduced below.

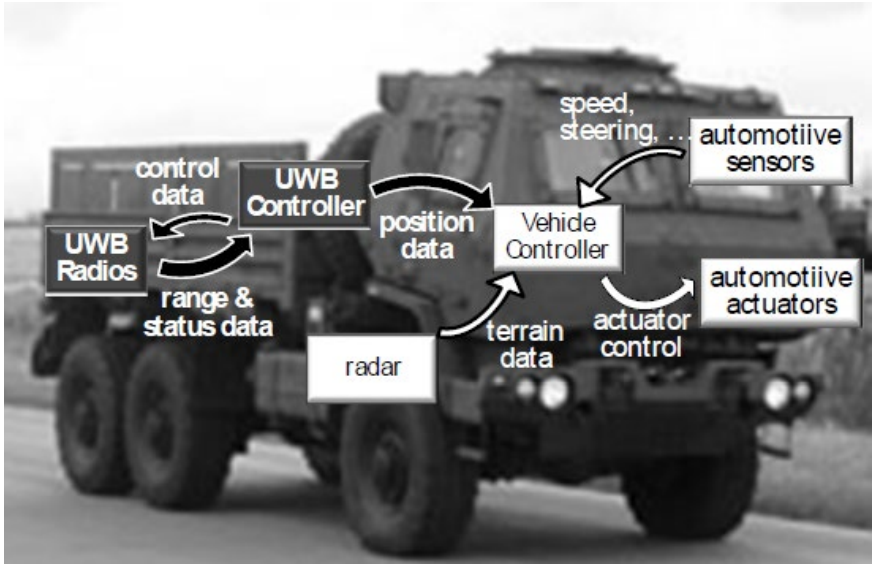

[16] Page numbers cited in this Decision are the underlying page numbers of the references themselves.

Figure 1 shows an autonomous navigation system applied to an MTV convoy. Ex. 1008, 210. The system controller selects two radios to be requesters and two radios to be responders in order to minimize the dilution of precision (DOP) that can result based on the respective angles and orientations of both vehicles and the location of the positioning radios that are selected to measure position. *Id.* at 213 (configuring coordinate radio pairs to define eight zones). Figures 6 and 7 of Richardson are reproduced below.

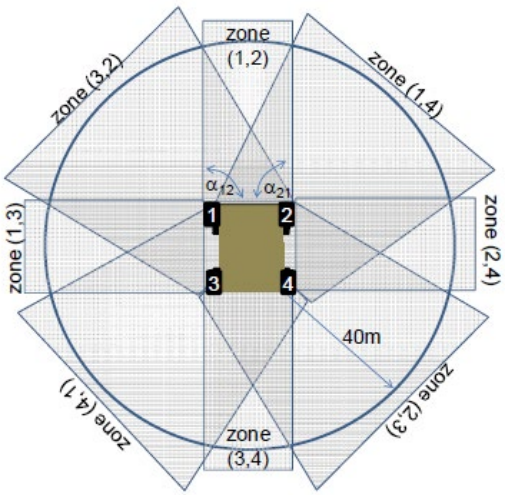

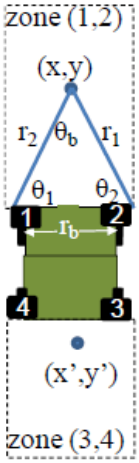

Figure 6 (left) depicts eight zones defined by coordinate radio pairs that determine locations (x, y) and (x', y') located in different zones. *Id.* Figure 7 (right) illustrates bilateration for position measurement by eliminating ambiguous position at (x', y'). *Id.*

2. Claims 5 and 6

Petitioner contends that Richardson uses four UWB transceivers with an offset distance of r_b as "auxiliary transponder sensor module" and auxiliary antenna, as recited in claims 5 and 6, to improve location measurements and collision avoidance. Pet. 25–28 (citing Ex. 1008, 213, 214, Figs. 6, 7). Petitioner further contends that Richardson also teaches

mounting the first auxiliary antenna at an offset (r_b) from the other unit, as illustrated in Figure 7. Pet. 27–28 (citing Ex. 1008, 214, Fig. 7)

Petitioner argues that an ordinarily skilled artisan would have understood that Grisham's ability to calculate distances based on the location of a single impulse radio module on long trains would not avoid collisions at other points on the train that may be a mile away so that such an artisan would have been motivated to supplement Grisham's system with Richardson's use of multiple UWB transceivers with their own antennas that are offset (r_b) from another unit to account for the train's length, improve location measurements, and avoid collisions to include using Richardson's user interface to calibrate ranging of the modules for a train. *Id.* at 26–28 (citing Ex. 1008, 211, 213, 214, Figs. 6, 7; Ex. 1003 ¶¶ 145–152).

Patent Owner responds that Grisham does not suggest that train length is an issue or that an auxiliary transponder sensor module would solve this problem. PO Resp. 20. And Richardson, Patent Owner argues, does not account for the length of a train of over a mile given that Richardson's system is designed for distance r_b, which is of the order of a few feet. *Id.* (citing Ex. 2012 ¶¶ 62–63). Patent Owner asserts that this is important because, as Mr. Andrews admits, UWB is relatively range-limited due to low transmission power. *Id.* at 20–21 (citing Ex. 1003 ¶ 176). According to Patent Owner, the Petition and Mr. Andrews fail to satisfactorily explain how the combination of the Grisham and Richardson is supposed to work. *Id.* at 21; *see also* PO Sur-reply 28.

Based on our review of the complete record, we are persuaded that Petitioner has shown that the combination of Grisham and Richardson teaches the additional limitations of claims 5 and 6.

The ’131 patent specification describes an embodiment in which vehicle 900 uses multiple offset transponder sensor modules (TSMs) 902, 904, and a sensor included in TSM 904 is placed *near an end* of the vehicle to calibrate itself to determine the location of the vehicle’s end and that of other vehicles. Ex. 1001, 11:64–12:16. TSMs may be mounted at a vehicle’s front and rear ends. *Id.* at 12:40–42.

Richardson mounts four UWB radios on corners of each vehicle of a convoy to measure distances between adjacent vehicles by defining positions of adjacent vehicles. Ex. 1008, 212–213. “[T]he four coordinate radios are spaced so as to limit DOP [dilution of precision] and eight zones are defined using radio pairings as shown in Figure 6 to balance the effects of DOP between zones.” *Id.* at 213. “At each position update, the controller on the following truck selects two radios to be requesters and two radios to be responders based on minimization of DOP.” *Id.* The more accurate position measurements improve safety (and reduce collisions). *Id.* at 209, Abstract.

Petitioner argues that a person of ordinary skill in the art would have applied this technique in Grisham for similar benefits of better measurements between a train (front and rear ends) and nearby vehicles to avoid collisions as Richardson teaches.[17] Pet. 26; Ex. 1003 ¶¶ 147–148; Ex. 1008, 209–214. We find Petitioner’s reason to combine the references persuasive. *See KSR*, 550 U.S. at 417 (“if a technique has been used to improve one device, and a person of ordinary skill in the art would recognize

[17] To the extent Patent Owner argues that Grisham alone does not disclose an auxiliary transponder sensor module (PO Resp. 19), “the test for obviousness is what the combined teachings of the references would have suggested to those having ordinary skill in the art.” *In re Mouttet*, 686 F.3d at 1333.

that it would improve similar devices in the same way, using the technique is obvious").

As Petitioner points out, "Richardson's multiple transponder sensor module (TSM) format can account for lengthy trains to prevent collisions at the train's *front and rear*." Pet. Reply 15–16 (emphasis added) (citing Pet. 26; Ex. 1003 ¶ 148). We agree with Petitioner that "UWB signal range is irrelevant in this scenario because the train would be within UWB range in the front via the front TSMs and in the rear via the rear TSMs." *Id.* at 16 (citing Ex. 1003 ¶ 148); *see also id.* (pointing out also that Richardson's range is at least longer than the length of MOW vehicles). Richardson's disclosure evidences a high degree of predictability in this art to support a reasonable expectation of success in the combination.

On the complete record before us, Petitioner has established, by a preponderance of the evidence, that the combination of Grisham and Richardson would have rendered the subject matter of claims 5 and 6 obvious to one of ordinary skill in the art at the time of the invention.

G. Ground 1D: Alleged Obviousness Over Grisham and McDaniel

Petitioner asserts the unpatentability of claim 10 under § 103(a) over Grisham and McDaniel. *See* Pet. 2–3, 29–30.

1. McDaniel (Ex. 1015)

McDaniel discloses a collision avoidance system that determines threshold warning distances and minimum distances to avoid collisions adaptively based on the velocities of vehicles. Ex. 1015 ¶¶ 1, 38, 39.

2. Claim 10

Petitioner contends that McDaniel uses a controller to set a minimum threshold warning distance required by host machine 110 to avoid a collision

based on velocities of host machine 110 and target object 130, and an ordinarily skilled artisan would have added this feature to a vehicle mounted module to avoid collisions more accurately and effectively using speeds of approaching trains to avoid nuisance alerts where Grisham already collects speed and distance data. Pet. 29–30 (citing Ex. 1015 ¶¶ 38, 39; Ex. 1003 ¶¶ 153–156). Petitioner asserts that given the number of trains that can be positioned safely within feet of each other in, for example, a train yard, a skilled artisan would have understood that a collision-avoidance system would need a way of alerting an operator *only* to potential collision situations—not merely situations where a train is nearby—and would have been motivated to modify Grisham to implement an adaptive threshold feature, which would have been a routine and simple change. *Id.*

Patent Owner contends "determining a speed of the first rail vehicle—a requirement of the claim—is not found in either Grisham or McDaniel," and there "is no reasonable expectation of success at arriving at the claimed invention even after combining these references." PO Resp. 21. Patent Owner contends "it is not possible to implement McDaniel's adaptive threshold feature" without knowing *how* the local velocity is determined. *Id.* at 22. According to Patent Owner, Grisham does not collect absolute speed and McDaniel requires the absolute speed of both vehicles. *Id.* at 22–23.

Patent Owner further contends that Petitioner "fails to explain how the 'adaptive threshold feature' of McDaniel would purportedly work in the collision-avoidance system of Grisham." PO Resp. 23–24. According to Patent Owner, McDaniel does not discuss distinguishing between target objects that are a true threat and those that are merely a nuisance. *Id*. at 24 (citing Ex. 2007, 109:20–24).

Based on our review of the complete record, we are persuaded that Petitioner has shown that the combination of Grisham and McDaniel teaches the additional limitations of claim 10.

We agree with Petitioner that Grisham already collects speed and distance data. Ex. 1006, 24:18–24; Ex. 1003 ¶¶ 128–130. Patent Owner argues that Grisham does not collect *absolute* speed data. PO Resp. 22. The claim language, however, simply recites "speed," not absolute speed. Ex. 1001, 32:2. Even if measurement of absolute speed is required, Mr. Andrews persuasively testifies that Grisham teaches that measurement of absolute speed of the vehicle by measuring the speed relative to the ground. Ex. 2007, 94:21–23.

Patent Owner also argues that "speed and velocity are different concepts," (PO Sur-reply 29 (citing https://en.wikipedia.org/wiki/Velocity)), but fails to explain the relevance of the difference between those two measurements in context of the claimed invention. *See, e.g.*, Ex. 1001, 16:65–17:5 (discussing both speed and velocity measurements in determining expected vehicle stopping distances without distinguishing between the two).

We are also persuaded that Petitioner has made a sufficient showing that an ordinarily skilled artisan would have been motivated to add McDaniel's adaptive threshold feature to Grisham's system in order to improve the ability of Grisham's CAS to distinguish trains that present a threat of collision from those that do not by considering the approaching speeds of trains. Pet. 29–30; *see KSR*, 550 U.S. at 417.

McDaniel's adaptive threshold warning system would enhance the CAS of Grisham to avoid nuisance alerts to operators of the safe approach or close proximity of other trains "given the number of trains that can safely be

positioned within feet of each other in, for example, a train yard." Pet. 29–30. McDaniel modifies vehicle separation thresholds based on the speed of a first vehicle and the speed of a second vehicle as claimed. Ex. 1015 ¶¶ 16, 39. Petitioner persuasively argues that a person of ordinary skill in the art would have been motivated to use McDaniel's teachings to improve Grisham's CAS by identifying rail vehicles approaching at speeds that are unsafe. Pet. 30. McDaniel determines relative velocities of vehicles to assess a closing rate and whether a target object is approaching, retreating, or moving in a direction orthogonal to host machine 110, and Mr. Andrews testifies that calculating threshold warning distances with velocities would alert operators when stopping distances are inadequate and may be implemented routinely in Grisham. Ex. 1003 ¶¶ 153–156 (citing Ex. 1015 ¶¶ 38–39). We credit Mr. Andrews's testimony because it is consistent with the McDaniel's teachings.

Patent Owner argues McDaniel's inability to avoid nuisance alerts from trains on a *different* track undermines Petitioner's motivation to combine McDaniel with Grisham. PO Sur-reply 29–30. But Petitioner does not rely on eliminating such nuisance alarms for its argument.[18] Pet. 29–30. We agree with Petitioner that the fact that McDaniel eliminates *some* nuisance alarms—e.g., alarms in the train yard when two trains on the same track move slowly—would have been a sufficient improvement to Grisham

[18] Nor does Claim 10 require a system to distinguish target objects that are a true threat from those that are a nuisance such as trains that are nearby but on a separate and distinct track as Patent Owner argues. PO Resp. 24. Such argument is not commensurate with the scope of the claim and not relevant to a reasonable expectation of success inquiry. *See Intelligent Bio-Sys.*, 821 F.3d at 1367.

to motivate an ordinarily skilled artisan. Pet. Reply 19 (citing *In re Fulton*, 391 F.3d 1195, 1200 (Fed. Cir. 2004)).

On the complete record before us, Petitioner has established, by a preponderance of the evidence, that the combination of Grisham and McDaniel would have rendered the subject matter of claim 10 obvious to one of ordinary skill in the art at the time of the invention.

H. Ground 1E: Alleged Obviousness Over Grisham and Breed

Petitioner asserts the unpatentability of claims 12 and 13 under § 103(a) over Grisham and Breed. Pet. 2–3, 30–32.

1. Breed (Ex. 1014)

Breed's safety system uses an inertial measurement unit (IMU) with accelerometers and gyroscopes to measure acceleration and angular rate and changes thereto to improve location tracking and velocity measurements of vehicles to reduce a risk of collision. Ex. 1014 ¶¶ 13, 93, 109, 205, 567.

Figure 17A of Breed is reproduced below.

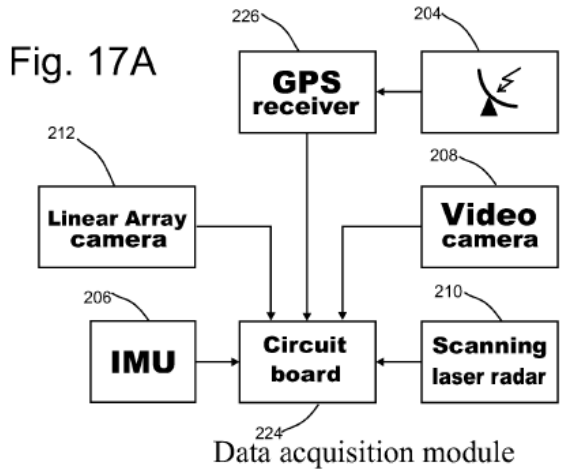

Figure 17A shows a processor including printed circuit board 224 coupled to GPS receivers 226, IMUs 206, video cameras 208, and linear cameras 210 and the Scanning laser radars 212. Ex. 1014 ¶ 225. The processor receives

information regarding the position of the vehicle from GPS receivers 226 and IMUs 206. *Id.* An IMU typically has three accelerometers and three gyroscopes that are held together in a single housing. *Id.* ¶¶ 93, 205.

2. Claims 12 and 13

Regarding claims 12 and 13, Petitioner contends that Breed uses an IMU in a vehicle location system, and the IMU contains accelerometers that measure "vehicle acceleration in latitude, longitude, and vertical directions," and the changes in speed are sent to a processor. Pet. 30–32 (citing Ex. 1014 ¶¶ 93, 205, 225, 567; Ex. 1003 ¶¶ 157–165; Ex. 1006, 2:16–31, 24:46). Petitioner contends that Breed specifically teaches inertial measurement units via a "device having a plurality of accelerometers and a plurality of gyroscopes generally within the same package." *Id.* at 32 (quoting Ex. 1014 ¶ 93).

Petitioner contends that an ordinarily skilled artisan would have been motivated to consider the speed and acceleration detection system of Breed to supplement Grisham's UWB-based system to ensure that position data and calculations regarding the potential for collision are as exact as possible by knowing a train's location to avoid collisions. Pet. 31. Petitioner asserts that an ordinarily skilled artisan would have been motivated to modify Grisham in view of Breed to couple an IMU with its accelerometers and gyroscopes to provide accurate speed and acceleration data beyond the working range of UWB to assist in avoiding collisions by the vehicle-to-vehicle communications as Grisham desires by improving speed and acceleration measurements. *Id.* at 31–32 (citing Ex. 1014 ¶ 93; Ex. 1006, 2:16–31, 24:46; Ex. 1003 ¶¶ 161–165). Given the catastrophic consequences of collisions between rail vehicles, Petitioner contends, a

person of ordinary skill in the art would have been motivated to include redundant systems to guard against system failures. *Id.* at 32.

Patent Owner does not specifically respond to these arguments. *See* PO Resp. 25. We adopt Petitioner's arguments for the reasons provided by Petitioner to find that the combination of Grisham with Breed teaches the subject matter of claims 12 and 13. Petitioner also persuasively shows that a person of ordinary skill in the art would have been motivated to combine Grisham with Breed, with a reasonable expectation of success. Pet. 31–32. On the complete record, Petitioner has established, by a preponderance of the evidence, that the combination of Grisham and Breed would have rendered the subject matter of claims 12 and 13 obvious to one of ordinary skill in the art at the time of the invention.

I. Ground IF: Alleged Obviousness Over Grisham and Connell

Petitioner asserts the unpatentability of claim 15 under § 103(a) over Grisham and Connell. *See* Pet. 2, 29–30.

1. Connell (Ex. 1012)

Connell relates to a system for determining brake shoe effectiveness of a braking arrangement of a train during operation of the train. Ex. 1012, code (57).

Figure 2 of Connell is reproduced below.

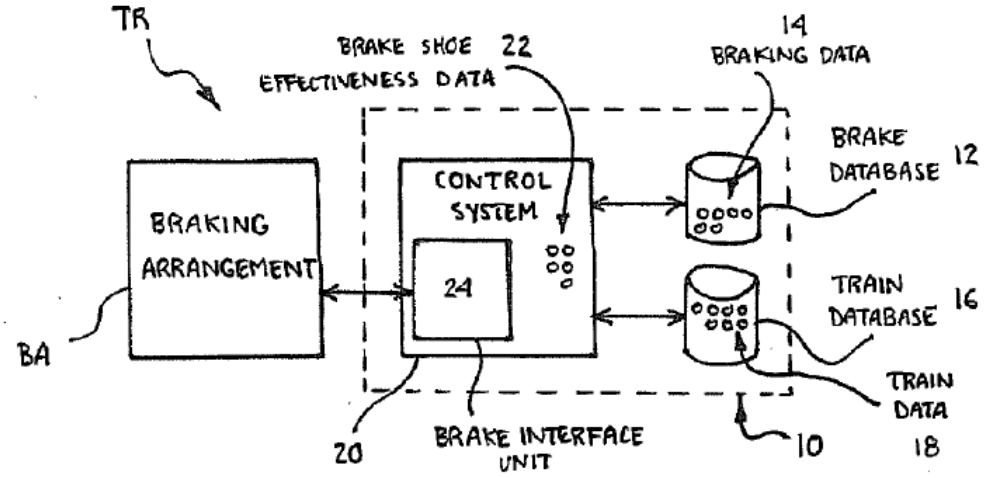

Figure 2 shows schematic view of Connell's system. Ex. 1012 ¶ 19. Control system 20 is operable to determine dynamically brake shoe effectiveness data 22 that provides sufficient information used to determine the ability of a braking arrangement to retard a train to a specified level, whether a speed level or a complete stop, based on braking data 14 in brake database 12 and train data 18 in train database 16. *Id.* ¶ 26. Once the desired brake shoe effectiveness data 22 is determined, the control and operational parameters of the train are determined or set such as speed limits, maximum speed limit, braking curve distance required for the train to stop completely, and stopping distance. *Id.* ¶ 28.

2. Claim 15

Petitioner asserts that Connell calibrates the distance required for a train TR to stop completely by dynamically determining the brake shoe effectiveness as the train travels, and an ordinarily skilled artisan would have understood this teaching to mean the distance between a first location when the brakes are engaged and a second location when the vehicle comes to a complete stop as claimed. Pet. 33–34 (citing Ex. 1012 ¶¶ 25, 26, 28; Ex. 1003 ¶¶ 166–171).

Mr. Andrews testifies that Connell's vehicle mounted module can execute a stopping distance calibration feature that measures a stopping distance under existing conditions as control system 20 using brake database 12 and train database 16 to dynamically determine brake shoe effectiveness data 22 and the ability of the braking to retard the train to a specified level, e.g., a speed level *or a complete stop* and control operational parameters such as *a braking curve, which is the distance required for the train TR to completely stop*. Ex. 1003 ¶¶ 166–169 (citing Ex. 1012 ¶¶ 25, 26, 28); *see also* Pet. 33–34 (citing Ex. 1012 ¶¶ 25, 26, 28; Ex. 1003 ¶¶ 166–171).

Connell's calibration feature dynamically determines brake shoe effectiveness data 22 to then "determine the ability of the braking arrangement BA to retard the train TR to a specified level, whether a speed level *or a complete stop*." Ex. 1012 ¶ 26 (emphasis added). Additional calibration features use the determined brake shoe effectiveness to calibrate operational parameters such as "a braking curve, i.e., the distance required for the train TR to completely stop" and "a stopping distance." *Id.* ¶ 28.

Petitioner persuasively argues that an ordinarily skilled artisan "would have been motivated to incorporate Connell's stopping distance calibration feature for vehicle collision avoidance into Grisham's collision-avoidance system in order to avoid collisions when rail vehicles are approaching at different speeds or braking conditions." Pet. 33–34 (citing Ex. 1003 ¶¶ 170–171). Petitioner asserts that:

> Situations where a collision may occur can vary, and the distance between trains may not, on its own, be the best indication of collision risk given the difference in stopping distances between braking in ideal conditions compared to

> braking in the rain or in other conditions that increase stopping distance or decrease stopping ability.

Id. at 34. Petitioner also persuasively argues that because Grisham's vehicle mounted module already detects potential collisions, improving Grisham's detection via calibration of stopping distance for a train would have been a routine design change for a person of ordinary skill in the art. *Id.*.

Patent Owner does not specifically respond to these arguments. *See* PO Resp. 25. We adopt Petitioner's arguments for the reasons provided by Petitioner to find that the combination of Grisham with Connell teaches the subject matter of claim 15. Petitioner also persuasively shows that a person of ordinary skill in the art would have been motivated to combine Grisham with Connell, with a reasonable expectation of success. Pet. 33–34. On the complete record, Petitioner has established, by a preponderance of the evidence, that the combination of Grisham and Connell would have rendered the subject matter of claim 15 obvious to one of ordinary skill in the art at the time of the invention.

J. Ground 2A: Alleged Obviousness Over Grisham and Nixon

Petitioner asserts the unpatentability of claims 7–9, 17, and 19 under § 103(a) over Grisham and Nixon. Pet. 1–3, 34–40.

1. Nixon (Ex. 1016)

Nixon's collision avoidance system uses trail alert transceiver 100 to transmit identification codes to trail alert transceivers on other vehicles and output sound/light alert signals based on a range and speed estimated from received signals to indicate relative distance (e.g., faster beeping as a target moves closer) of an approaching vehicle. Ex. 1016, 1, 5–6.

Figure 2 of Nixon is reproduced below.

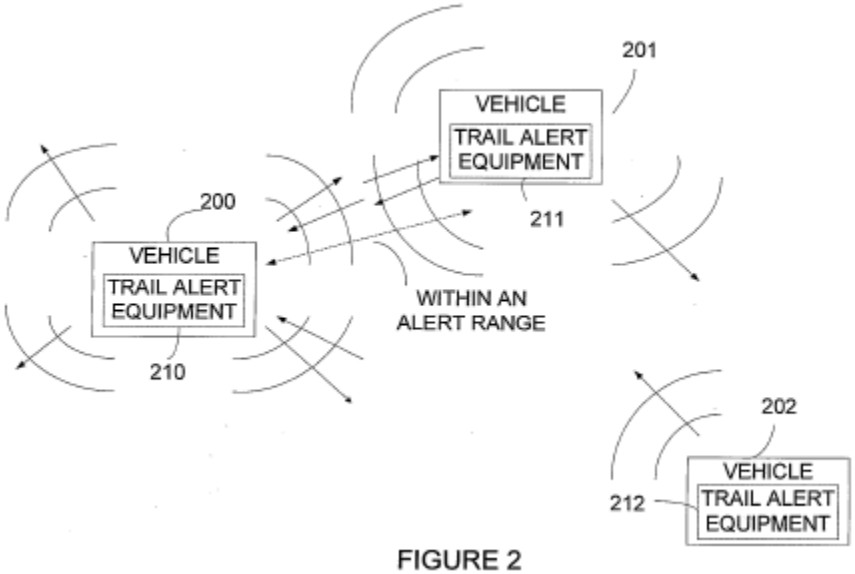

FIGURE 2

Figure 2 illustrates "a scenario showing interaction of vehicles in accordance with an embodiment of the present invention." Ex. 1016, 4. The trail alert equipment can be applied to any kind of vehicle such as a train, airplane, boat, ship, snowmobile, and ATV. *Id.* at 6. The trail alert equipment can determine positions of targets by processing outputs of a vehicle location system such as GPS receivers that receive GPS signals from other trail alert equipment and determine their own position while displaying a target's position based on range estimation and also displaying their own position as determined by the GPS receiver. *Id.* at 6–7.

2. Claim 7

Regarding claim 7, Petitioner asserts that Nixon uses a GPS receiver to receive GPS signals to determine the receiver's position and communicate that position to collision avoidance equipment, and vehicles like trains can be equipped with GPS receivers to determine their absolute location. Pet. 35 (citing Ex. 1016, 6–7; Ex. 1003 ¶¶ 172–175). Petitioner asserts that an ordinarily skilled artisan would have been motivated to supplement

Grisham's UWB-based collision avoidance system with Nixon's GPS units because UWB accuracy is range-limited due to low transmission power that reduces its usefulness in stopping long trains. *Id.* Petitioner also asserts that a person of ordinary skill in the art would have been motivated to supplement data of Grisham's UWB-based system with heading, acceleration, and heading for collision-avoidance, and a GPS system complements a UWB system by being effective at larger distances and tracking train travel paths. *Id.* at 36–37 (citing Ex. 1003 ¶¶ 176–179). Petitioner contends that GPS can make up for the shortfalls of UWB discussed above by allowing positioning at larger distances between trains and by providing heading and other information useful to train-safety systems. *Id*. at 36. Petitioner also contends that a person of ordinary skill in the art "would have [also] understood that using GPS location data to track the paths of the trains would allow the system to determine if those paths intersected at any point in the future, and thereby would assure a more robust and error free collision warning system." *Id.* at 37.

Patent Owner responds that Petitioner makes several incorrect assertions about the motivation to combine Grisham with Nixon. PO Resp. 25–30. Patent Owner contends that conventional thinking at the time of the invention was that UWB signals could interfere with the signals received from GPS satellites because the GPS signals had low power levels near the surface of the earth at a GPS receiver location. *Id.* at 25–26 (citing Ex. 2012 ¶ 71). Patent Owner argues that given the potential for interference, there is "no other reference [in the record] that teaches communicating GPS locations using UWB radios or a reference that teaches *using both* UWB and GPS to avoid collisions." *Id.* at 26 (citing Ex. 2012 ¶ 70) (emphasis added); PO Sur-reply 31–32. Patent Owner further argues

that GPS accuracy can vary by several meters and such lack of accuracy would have defeated any motivation to combine Grisham with Nixon. PO Resp. 27 (citing Ex. 2012 ¶ 72). Patent Owner also contend that "[b]ecause UWB has a limited operating range, GPS information would be capable of being communicated between trains using UWB only when the trains are within the limited operating range of UWB," and "adding GPS to UWB will not improve the collision avoidance range capability of UWB." *Id.* at 27–28 (citing Ex. 2012 ¶ 74).

Based on our review of the complete record, we are persuaded that Petitioner has shown that the combination of Grisham and Nixon teaches the limitations of claim 7, and that Petitioner has provided adequate reasons why a person of skill in the art would have combined the two references in the manner proposed by Petitioner.

Petitioner contends that Nixon's collision avoidance system uses GPS to determine the absolute position of moving vehicles such as trains and provide alerts based on the proximity of vehicles to one another by beeping faster as a target moves closer, and they cite teachings in Nixon. Pet. 34–35 (citing Ex. 1016, 5–7; Ex. 1003 ¶¶ 92–93 (citing Ex. 1016, 5–7), 172–175 (citing Ex. 1016, 6–7), 176–179 (citing Ex. 1037, 4:66–5:5)). Mr. Andrews testifies that an ordinarily skill artisan would have augmented Grisham's UWB-based system with Nixon's GPS because UWB has low transmission power and would benefit from using GPS to measure the absolute position and heading of vehicles. Ex. 1003 ¶¶ 61 (citing Ex. 1025 ¶ 3), 176–179. Mr. Andrews further testifies that GPS's accuracy can vary by several meters, but UWB precisely measures range and refines the accuracy of GPS to prevent collisions at all distances, and that GPS offsets shortfalls of UWB while UWB overcomes limitations of GPS such as in tunnels, urban areas, or

areas of low satellite visibility. *Id.* ¶¶ 175–179 (citing Ex. 1016, 6; Ex. 1037); *see id.* ¶¶ 61–70.

Mr. Andrews further testifies that Grisham discloses a UWB-based collision avoidance system, and Nixon's GPS based collision avoidance system uses GPS position data "so it would have been readily apparent to a [person of ordinary skill in the art] how to implement GPS into the radio units from Grisham." Ex. 1003 ¶¶ 174–179 (citing Ex. 1016, 6–7). The level of detail in Grisham, Nixon, and the '131 patent for using UWB and GPS in collision avoidance systems to determine locations and distances between vehicles indicates the technologies are well developed and predictable enough to implement together with a reasonable expectation of success to use a GPS unit in a VMM to receive satellite data as recited in claim 7. *See Intelligent Bio-Sys.*, 821 F.3d at 1367. And contrary to Patent Owner's assertion, Nixon *itself* uses GPS *and* UWB in a collision avoidance system, which Nixon states can be applied to a train. Ex. 1016, 2–3, 5–14; *see* Pet. 34–37; Ex. 1003 ¶¶ 173–175 (citing Ex. 1016, 6–7).

Petitioner also offers persuasive evidence showing that well before the time of the '131 patent, others had "performed measurements and analyses to determine the UWB emission levels necessary to prevent interference to GPS operation," and the FCC had announced emission limits for UWB that would sufficiently protect GPS from interference. Ex. 1059, 28, 67, 104–112; Pet. Reply 20. Patent Owner argues that the FCC report relates only to *harmful* interference whereas a person of ordinary skill in the art would have been concerned about *any* interference. PO Sur-reply 31 (citing Ex. 1052, 139:18–146:20; Ex. 1053, 117:10–23). Patent Owner's argument misses the point. The FCC Report establishes that various entities were using UWB and GPS together years before the '131 invention and there

were solutions available to address any interference concerns. Further, none of the testimony that Patent Owner cites supports that an ordinarily skilled artisan would have been so concerned about the potential for interference as to entirely avoid combining those technologies for a collision avoidance system. Ex. 1052, 139:18–146:20; Ex. 1053, 117:10–23. Patent Owner's argument therefore does not undermine Petitioner's proffered motivation to combine Grisham with Nixon.[19] *See Gen. Electric Co. v. Raytheon Techs. Corp.*, 983 F.3d 1334, 1351 (Fed. Cir. 2020) ("A given course of action often has simultaneous advantages and disadvantages, and this does not necessarily obviate motivation to combine." (internal quotations and brackets omitted)).

Next, Patent Owner's argument that UWB has a limited operating range and GPS information could not be communicated between trains using UWB ignores Grisham's disclosures of its radio units communicating other types of information with each other. Ex. 1006, 23:64–24:29, Fig. 22. Further, as Petitioner points out, GPS provides the location and heading information of at least one of the vehicles (first rail vehicle) regardless of whether that vehicle is within UWB range of another vehicle, and we are persuaded that accurately determining the location of one vehicle itself

[19] Consistent with the prior art teachings, the '131 patent specification itself acknowledges that prior art collision-avoidance systems used GPS and radar-based sensors to monitor rail vehicle locations except when the systems enter "blackout" areas in buildings, mountains, canyons, and tunnels, where GPS cannot determine a vehicle's location accurately. Ex. 1001, 2:60–3:3. The claimed collision avoidance system introduces redundancy of multiple types of sensors with different accuracies at different distances. *Id.* at 3:64–4:9.

provides sufficient motivation for an ordinary skilled artisan to combine the two references.

Lastly, Patent Owner's argument as to GPS's accuracy (PO Resp. 27–28) also does not undermine Petitioner's reason to combine—that GPS allows positioning at *larger* distances and also provides additional information, such as heading and acceleration. Pet. Reply 21. Under Petitioner's proposed combination, "GPS would provide a better overall picture of where the train is and where other trains are, UWB allows that picture to be refined to the level of accuracy needed to assure that a collision does not occur." *Id.* (quoting Ex. 1003 ¶ 179). Petitioner's evidence, including Mr. Andrews's testimony, support Petitioner's reason for combining Grisham with Nixon. *See KSR*, 550 U.S. at 420 ("[A]ny need or problem known in the field of endeavor at the time of invention and addressed by the patent can provide a reason for combining the elements in the manner claimed").

On the complete record before us, Petitioner has established, by a preponderance of the evidence, that the combination of Grisham and Nixon would have rendered the subject matter of claim 7 obvious to one of ordinary skill in the art at the time of the invention.

3. Claims 8 and 9

Regarding claims 8 and 9, Petitioner asserts that Nixon and Grisham issue alarms to alert an operator to oncoming trains in the vicinity, and the warnings can be variable in sight or sound (e.g., beeping faster) as a target is moving closer or approaching rapidly in Nixon, and it would have been obvious to combine the teachings to distinguish collision alarms from other alarms. Pet. 37–39 (citing Ex. 1006, 23:57–60, Fig. 21; Ex. 1016, 5–6; Ex. 1003 ¶¶ 180–187). Petitioner contends that a person of ordinary skill in

the art would have been motivated to make Grisham's collision alarm systems more effective by distinguishing the alarm for collisions from other alarms, when the alarm is triggered, and what causes the alarm to change frequency, such as is taught by Nixon. *Id.* at 39 (citing Ex. 1003 ¶ 187).

As to claim 8, Patent Owner responds that "Nixon only discloses using the radio to 'determine whether one or more vehicle separation criteria are violated,' not both the radio and GPS." PO Resp. 28 (citing Ex. 1016, 7).

The test for obviousness, however, "is what the combined teachings of the references would have suggested to those having ordinary skill in the art." *In re Mouttet*, 686 F.3d at 1332 ("It is well-established that a determination of obviousness based on teachings from multiple references does not require an actual, physical substitution of elements."). Here, Petitioner has shown that the combined teachings of Grisham and Nixon would have taught using "information generated by the first global positioning system unit *and* the first radio communication unit" to determine if "vehicle separation criteria are violated," as recited by claim 8. Pet. Reply 22. We find no basis to require Petitioner to show more.[20]

As to claim 9, Patent Owner responds that "Grisham only allows the determination of relative speed." PO Resp. 29 (citing Ex. 2007, 68:1–4; Ex. 2012 ¶ 79). According to Patent Owner, a progressive alarm could not be implemented in Grisham's system without knowing the actual speed and

[20] Patent Owner also reiterates its argument as to Petitioner's reason to combine Nixon with Grisham. PO Resp. 29 (arguing that GPS is more likely to generate spurious warning signals). As discussed above, Petitioner relies on benefits that GPS does provide that would have motivated a person of ordinary skill in the art to combine Nixon with Grisham.

distance information of the other rail vehicles. *Id.* at 29–30. We do not find this argument persuasive. As explained in reference to claim 10, we are persuaded, in light of Mr. Andrews's testimony, that Grisham teaches measurement of absolute speed of the vehicle. *See supra* § III.G.2 (citing Ex. 2007, 94:21–23).

Moreover, Petitioner relies on Nixon as teaching that approaching speed is "estimated by tracking the change in distance." Pet. 38–39 (citing Ex. 1016, 5–6). Petitioner further contends that "[r]egardless of whether the distance monitor is turned on, 'a rapidly approaching vehicle within a certain range will always cause a panic alarm.'" *Id.* at 39 (citing Ex. 1016, 6; Ex. 1003 ¶¶ 184–186); Ex. 1006, 23:57–58 (teaching that the alarms activate when an oncoming train is "in their vicinity"). Given the combined teachings of Grisham and Nixon, we are persuaded that a person of ordinary skill in the art would have found it routine to implement a progressive alarm into Grisham's system. Pet. 39.

On the complete record before us, Petitioner has established, by a preponderance of the evidence, that the combination of Grisham and Nixon would have rendered the subject matter of claims 8 and 9 obvious to one of ordinary skill in the art at the time of the invention.

4. Independent Claim 17 and Claim 19

Petitioner contends that elements 17-Pre, 17A, and 17B track to elements 1-Pre, 1A, 1B, and 1F, and Grisham discloses them for the same reasons provided for claim 1 in Ground 1A. Pet. 39.

Regarding elements 17C–17G, Petitioner contends that Grisham uses radio units to transmit and receive impulse radio signals wirelessly to provide direction, speed, and separation distance data for each rail vehicle with a single antenna 704 (element 17C), a GPS system to determine an

absolute position of a rail vehicle with Nixon as for claim 7 (element 17D), and elements 17E–17G for the same reasons as elements 1C–1F in Ground 1A. Pet. 39–40 (citing Ex. 1006, 16:39–41, 16:59–60, 17:44–48, 23:42–47, Figs. 6, 7, 22; Ex. 1003 ¶¶ 192–197).

Petitioner contends that the limitations of claim 19, a claim that depends from claim 17, track to claims 8 and 9 and are satisfied for the same reasons provided for claims 8 and 9 in Ground 2A. Pet. 40 (citing Ex. 1003 ¶ 198).

Patent Owner responds that "[t]here is no suggestion [in Grisham] that data representing the separation distance is communicated over the air." PO Resp. 30–31 (citing Ex. 1006, Fig. 22; Ex. 2012 ¶¶ 81–82). Patent Owner contends that "[a]t optional block 2212 [of Figure 22 of Grisham], the only details displayed are direction, speed, and distance." *Id.* at 31.

In its Reply, Petitioner responds that the only way distance information is displayed in Grisham is if data representing the separation distance is communicated over the air. Pet. Reply 23 (citing *See* Ex. 1006, 23:32–24:28; Ex. 1003 ¶ 192). Petitioner points to its contentions with respect to limitation 1J as detailing the determination of separation distance from the impulse radio signal. *Id.* at 23–24 (citing Ex. 1003 ¶¶ 197, 125–127).

We agree with Patent Owner that Petitioner's contentions as to claim 17 are deficient. PO Sur-reply 14. Petitioner fails to point us any portion of Grisham that teaches "a first wireless communications antenna operable to send and receive data representing the separation distance over the air," as claimed. *See* Pet. 39–40. And we are not persuaded that Grisham *requires* "separation distance" data to be communicated in order to determine or

display distance information. Grisham discloses that to determine distance information,

> a controller 1110 within the receiving impulse unit 904 can use the revolutionary positioning capabilities of impulse radio technology. . . . In particular, *the impulse radio signal* 910 transmitted between the transmitting impulse radio unit 902 and the receiving impulse radio unit 904 *enables* the *controller* 1110 to *measure* distance.

Ex. 1006, 23:66– 24:8 (emphasis added). It is, therefore, the *controller* on the receiving end that determines distance, and as Patent Owner contends, "there is no need to transmit the separation distance." PO Sur-reply 14.

Petitioner also points us to Mr. Andrews's testimony, but that testimony relies solely on Figure 22 of Grisham, which merely references *displaying* distance information (Ex. 1006, Fig. 22) and details how distance may be calculated at the receiving unit. Ex. 1003 ¶¶ 197, 125–127.

Because we conclude, based on the evidence and arguments presented by Petitioner in its Petition and the Reply, that Petitioner has not met its burden to show by a preponderance of the evidence that Grisham teaches "first wireless communications antenna operable to send and receive data representing the separation distance over the air," Petitioner has not shown that the subject matter of claim 17 of the '131 patent would have been obvious over Grisham and Nixon at the time of the invention.

For the same reasons, we conclude that Petitioner has not shown that the subject matter of dependent claim 19 of the '131 patent would have been obvious over Grisham and Nixon at the time of the invention. *Mylan Pharm. Inc. v. Research Corp. Techs., Inc.*, 914 F.3d 1366, 1376 (Fed. Cir. 2019) ("Dependent claims, with added limitations, are generally not obvious when their parent claims are not.").

K. Ground 2B: Alleged Obviousness Over Grisham, Connell, Nixon, and McDaniel

1. Claim 16

Petitioner asserts the unpatentability of claim 16 under § 103(a) over Grisham, Connell, Nixon, and McDaniel. Pet. 2–3, 41.

Petitioner contends that claim 16 contains limitations that track the limitations of claims 9 and 10 and are satisfied for the reasons provided for claim 9 in Ground 2A and for claim 10 in Ground 1D. Pet. 41. Petitioner contends that an ordinarily skilled artisan would have been motivated to incorporate McDaniel's adaptive threshold warning system and Connell's stopping distance calibration feature for vehicle collision avoidance into Grisham's CAS to accurately and effectively avoid collisions when rail vehicles are approaching at different speeds or braking conditions and to avoid nuisance alerts to operators of the safe approach or close proximity of other trains and the urgency of the warning. *Id.* (citing Ex. 1003 ¶¶ 199–201).

Patent Owner does not specifically respond to these arguments. *See* PO Resp. 32.

On the complete record before us, Petitioner has established, the combination of Grisham with Connell, Nixon, and McDaniel teaches the subject matter of claim 16. Petitioner also persuasively shows that a person of ordinary skill in the art would have been motivated to combine the asserted references, with a reasonable expectation of success. Pet. 41. On the complete record, Petitioner has established, by a preponderance of the evidence, that the combination of Grisham, Connell, Nixon, and McDaniel would have rendered the subject matter of claim 16 obvious to one of ordinary skill in the art at the time of the invention.

L. Ground 2C: Alleged Obviousness Over Grisham, Nixon, and Richardson

Petitioner asserts the unpatentability of claim 18 under § 103(a) over Grisham, Nixon, and Richardson. Pet. 2–3, 42–43.

1. Claim 18

Petitioner contends that skilled artisans would have been motivated to combine Grisham's UWB-based CAS with Nixon's longer-range GPS and use Richardson's auxiliary transponder sensor module and offset for better location measurements and improved collision avoidance. Pet. 42–43 (citing contentions for claims 7 and 9 in Ground 2A and claim 5 in Ground 1C; Ex. 1003 ¶¶ 202–207).

Patent Owner responds that claim 18 depends from claim 17 and is not obvious at least for the same reasons that claim 17 is not obvious. PO Resp. 32. We agree. Petitioner does not rely on Richardson for teaching "first wireless communications antenna operable to send and receive data representing the separation distance over the air," as recited in independent claim 17. For the reasons discussed with respect to claim 17, we conclude that Petitioner has not shown that the subject matter of dependent claim 18 of the '131 patent would have been obvious over Grisham, Nixon, and Richardson at the time of the invention.

M. Ground 2D: Alleged Obviousness Over Grisham, Nixon, Richardson, and Douglas

Petitioner asserts the unpatentability of claim 20 under § 103(a) over Grisham, Nixon, Richardson, and Douglas. Pet. 2–3, 43.

Petitioner asserts that the limitations of claim 20 (first and second central tracking unit (CTU) components on each vehicle) track to claims 2 and 3 and are satisfied for the same reasons as those claims in Ground 1B.

Pet. 43. Petitioner asserts that trains communicate their positions to each other through CTU components, and a skilled artisan would have been motivated to use CTUs on the trains of Douglas to communicate with each other and provide critical up-to-date information to operators. *Id.* (citing Ex. 1011, 7:12–19; Ex. 1003 ¶ 208).

Patent Owner responds that claim 20 depends from claim 18 and is not obvious at least for the same reasons that claims 17 and 18 are not obvious. PO Resp. 33–34. We agree. Petitioner does not rely on any of the other cited references for teaching "first wireless communications antenna operable to send and receive data representing the separation distance over the air," as recited in independent claim 17. For the reasons discussed with respect to claim 17, we conclude that Petitioner has not shown that the subject matter of dependent claim 20 of the '131 patent would have been obvious over Grisham, Nixon, Richardson, and Douglas at the time of the invention.

N. Ground 3A: Alleged Obviousness Over Suzuki or (Suzuki and Grisham)

Petitioner asserts the unpatentability of claims 1, 7, 8, 11–14, and 17 under § 103(a) over Suzuki alone or in combination with Grisham. *See* Pet. 2–3, 44–67.

1. Suzuki (Ex. 1005)

Suzuki discloses a collision avoidance system that uses UWB devices for communication and radar/ranging functions. Ex. 1005 ¶ 57. The system measures distances to an obstacle or a front vehicle using a radar function and issues a hazard warning to the driver if the distance is a predetermined amount or less. *Id.* ¶¶ 8, 18, 28, 37, 57.

Figure 1A of Suzuki is reproduced below.

FIG.1A

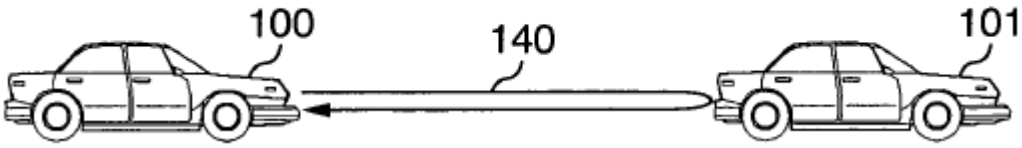

Figure 1A shows a configuration of an in-vehicle radar device that transmits and receives radar wave 140 to determine the distance between vehicle 100 and vehicle 101. *Id.* ¶¶ 13, 15.

2. Claims 1, 7, 8, and 11–14,

We do not reach this alleged ground of unpatentability of claims 1, 7, 8, and 11–14 because we determine that Petitioner has proved by a preponderance of the evidence that claims 1, 7, 8, and 11–14 would have been obvious over Grisham or the combination of Grisham and Nixon. *See supra* §§ III.D, III.H, III.J.

3. Claim 17

Patent Owner argues that Suzuki alone or in combination with Grisham fails to teach limitation 17C, "a first wireless communications antenna operable to send and receive data representing the separation distance over the air." PO Resp. 35–37. We focus our analysis below on that limitation.

Petitioner contends that "Suzuki teaches the use of a wireless communications antenna to send and receive data over the air." Pet. 67 (citing Ex. 1003 ¶ 278). Petitioner also cites to its contentions as to limitation 1B. *Id.* Petitioner further contends that a person of ordinary skill in the art "would be motivated to use the single-antenna embodiment of Figure 2 in the in-vehicle radar device 110 because it would reduce the cost

of antennas and save space inside of the vehicle mounted module." *Id.* (citing Ex. 1003 ¶ 278). That is the extent of Petitioner's contentions as to this limitation.

Patent Owner responds that Petitioner's reliance on contentions related to limitation 1B is insufficient because limitation 1B is not coextensive with 17C. PO Resp. 36. Patent Owner points out that limitation 1B recites "a first transponder sensor module operable to send and receive *data* wirelessly," but does not require "data representing the *separation distance*." *Id.* (emphases added). Patent Owner contends that Mr. Andrews's testimony is similarly lacking in showing how Suzuki alone or in combination with Grisham, teaches sending and receiving of data "*representing the separation distance over the air.*" *Id*. at 36–37 (citing Ex. 1003 ¶ 278; Ex. 2012 ¶ 98).

We agree with Patent Owner that Petitioner's contentions as to claim 17 are deficient under this ground as well. The Petition does not refer to *separation distance*, or allege that data representing separation distance can be sent or received in Suzuki. *See* Pet. 67; *see also id.* at 51–53 (contentions as to limitation 1B). Petitioner's contentions as to limitation 1B cite to various portions of Suzuki as disclosing various types of data (e.g., vehicle ID) that Suzuki's in-vehicle radar device sends and receives. *Id.* at 51 (citing Ex. 1005 ¶¶ 14, 15, 27, Figs. 1B, 3, 8). Petitioner, however, does not allege that any of those cited portions teach sending or receiving data representing separation distance over the air, as required by limitation 17C. *See id.* at 51–53, 67.

Petitioner, in its Reply, argues at Patent Owner ignores "the explicit teachings of Suzuki and its use of UWB radar to measure and communicate separation distances." Pet. Reply 26. Petitioner points out that Suzuki states

"[i]n addition, as many distances B between two cars as the number of a plurality of signals received in the receiver 132 of the radar will be obtained because of a plurality of other vehicles assumed to exist around the own vehicle." *Id.* (citing Ex. 1005 ¶ 16[21]). Petitioner, however, misreads Suzuki's disclosure. Suzuki explains that "[t]he vehicle-to-vehicle *distance measurement part 126 calculates* the distance B between two cars from the transmitted location information of other vehicle and its own location information obtained from the location information acquisition part 125." Ex. 1005 ¶ 16. Thus, when Suzuki refers to obtaining "many distances," it is clear that those distances are obtained through calculation described in the immediately preceding sentence, not that such data is received from another vehicle. Petitioner does not argue, and we see no reason why Suzuki would need to transmit such data between vehicles. *See* PO Sur-reply 16; *see also Netflix, Inc. v. DivX, LLC*, 84 F.4th 1371, 1377 (Fed. Cir. 2023) ("the Board should also not have to decode a petition to locate additional arguments beyond the ones clearly made").

Petitioner also argues that Grisham discloses limitation 17C. Pet. Reply 26 (citing Ex. 1003 ¶¶ 125–127, 278). First, we agree with Patent Owner, that this argument is untimely as the Petition does not cite Grisham as teaching limitation 17C under this ground. PO Sur-reply 17 (citing Ex. 1003 ¶ 278). Moreover, as discussed above (*supra* § III.J.4), we are not persuaded that Petitioner has shown that Grisham teaches this limitation.

[21] As Patent Owner points out, Petitioner cites to paragraph 55 of Suzuki, but that portion of Suzuki does not recite the quoted text. *See* PO Sur-reply 16. Instead, we find the quoted text in paragraph 16 and assume Petitioner intended to cite that portion.

Because we conclude, based on the evidence and arguments presented by Petitioner in its Petition and the Reply, that Petitioner has not met its burden to show by a preponderance of the evidence that Suzuki alone or in combination with Grisham teaches "first wireless communications antenna operable to send and receive data representing the separation distance over the air," as claimed, Petitioner has not shown that the subject matter of claim 17 of the '131 patent would have been obvious over Suzuki alone or in combination with Grisham.

O. Ground 3B: Alleged Obviousness Over Suzuki and Richardson or Over Suzuki, Grisham, and Richardson

Petitioner asserts the unpatentability of claims 2–6, 18, and 20 under § 103(a) over Suzuki and Richardson or Suzuki, Grisham, and Richardson. Pet. 2–5, 68–74 (citing Ex. 1003 ¶¶ 283–300).

We do not reach this alleged ground of unpatentability of claims 2–6 because we determine that Petitioner has proved by a preponderance of the evidence that claims 2–6 would have been obvious over Grisham in combination with Douglas or Richardson. *See supra* §§ III.E, III.F.

Patent Owner argues that claims 18 and 20 depend from claim 17 and are not obvious at least for the same reasons that claim 17 is not obvious with respect to Suzuki alone or in combination with Grisham. PO Resp. 38. We agree. Petitioner does not rely on Richardson for teaching "first wireless communications antenna operable to send and receive data representing the separation distance over the air," as recited in independent claim 17. For the reasons discussed with respect to claim 17, we conclude that Petitioner has not shown that the subject matter of dependent claims 18 and 20 of the '131 patent would have been obvious over Suzuki (or Suzuki and Grisham) in combination with Richardson.

P. Ground 3C: Alleged Obviousness Over Suzuki and Nixon or Over Suzuki, Grisham, and Nixon

Petitioner asserts unpatentability of claims 9 and 19 under § 103(a) over Suzuki and Nixon or Suzuki, Grisham, and Nixon. Pet. 2–3, 74–75.

We do not reach this alleged ground of unpatentability of claim 9 because we determine that Petitioner has proved by a preponderance of the evidence that claim 9 would have been obvious over Grisham in combination with Nixon. *See supra* § III.J.

Patent Owner argues that claim 19 depends from claim 17 and is not obvious at least for the same reasons that claim 17 is not obvious with respect to Suzuki alone or in combination with Grisham. PO Resp. 39. We agree. Petitioner does not rely on Nixon for teaching "first wireless communications antenna operable to send and receive data representing the separation distance over the air," as recited in independent claim 17. For the reasons discussed with respect to claim 17, we conclude that Petitioner has not shown that the subject matter of dependent claim 19 of the '131 patent would have been obvious over Suzuki (or Suzuki and Grisham) in combination with Nixon.

Q. Ground 3D: Alleged Obviousness Over Suzuki and McDaniel or Over Suzuki, Grisham, and McDaniel

Petitioner asserts the unpatentability of claim 10 under § 103(a) over Suzuki and McDaniel or Suzuki, Grisham, and McDaniel. Pet. 2–4, 75–76.

We do not reach this alleged ground of unpatentability of claim 10 because we determine that Petitioner has proved by a preponderance of the evidence that claim 10 would have been obvious over Grisham in combination with McDaniel. *See supra* § III.G.

R. Ground 3E: Alleged Obviousness Over Suzuki and Connell or Suzuki, Grisham, and Connell

Petitioner asserts the unpatentability of claim 15 under § 103(a) over Suzuki and Connell or Suzuki, Grisham, and Connell. Pet. 2, 4, 76.

We do not reach this alleged ground of unpatentability of claim 15 because we determine that Petitioner has proved by a preponderance of the evidence that claim 15 would have been obvious over Grisham in combination with Connell. *See supra* § III.I.

S. Ground 3F: Alleged Obviousness Over Suzuki, Nixon, McDaniel, and Connell or Over Suzuki, Grisham, Nixon, and McDaniel, Connell

Petitioner asserts the unpatentability of claim 16 under § 103 over Suzuki, Nixon, Connell, and McDaniel, or Suzuki, Grisham, Nixon, Connell, and McDaniel. Pet. 76.

We do not reach this alleged ground of unpatentability of claim 16 because we determine that Petitioner has proved by a preponderance of the evidence that claim 16 would have been obvious over Grisham in combination with Connell, Nixon, and McDaniel. *See supra* § III.K.

T. Patent Owner's Arguments Regarding Mr. Andrews's Opinions

Patent Owner argues that Mr. Andrews's opinions should not be accorded any weight "because Mr. Andrews lacks any professional experience with railroad collision avoidance systems, [and] cannot testify based on his own personal experience or knowledge, or the knowledge of a [person of ordinary skill in the art]." PO Resp. 5 (citing Ex. 2007, 45:11–12, 45:20–22). According to Patent Owner, Mr. Andrews's "perspective necessarily comes from his background in the automobile space," which is a more sophisticated and challenging environment than the railroad space. *Id.* at 6. Thus, Patent Owner argues, the "Board should apply the lower level of

skill advanced by Patent Owner and apply it through the lens of an industry that resists innovation and change." *Id.*; *see also* PO Sur-reply 9, 12 (citing Ex. 1053, 169:20–170:24, 182:15–23, 191:17–192:14) (arguing that Mr. Andrews's testimony deserves little to no weight).

Petitioner responds that Mr. Andrews's expertise includes the technologies claimed by the '131 patent, and his testimony will assist the Board to understand the evidence and to determine disputed facts. Pet. Reply 3 (citing Ex. 1053, 190:4–22). Petitioner contends that Mr. Andrews's opinions are sufficiently well-reasoned and supported. *Id.*

First, as discussed above (supra § III.A), we are not persuaded by Patent Owner's arguments that the level of skill art should be limited to experience with *railway* collision-avoidance systems or *railway* positioning systems. We, therefore, do not agree that Mr. Andrews's opinions are unhelpful simply because they may not be based on his personal experience with *railway* collision avoidance systems.

Second, Mr. Andrews's more than twenty years of experience with wireless technologies and transportation collision avoidance systems qualifies him as having more than ordinary skill in the art, and Mr. Andrews's supervision of ordinarily skilled artisans has familiarized him with their level of skill. Ex. 1003 ¶ 28. We do, however, consider his lack of railway experience in determining the weight to give to his testimony where relevant.

We note also that, as claimed, the CAS technology is simple enough that expert testimony is helpful, but not essential, to our understanding of the references and issues. *See Wyers v. Master Lock Co.*, 616 F.3d 1231, 1242 (Fed. Cir. 2010) ("expert testimony is not required when the references and the invention are easily understandable"); *Perfect Web Techs., Inc. v.*

InfoUSA, Inc., 587 F.3d 1324, 1329 (Fed. Cir. 2009) ("[n]or are expert opinions always a prerequisite").

As to Patent Owner's argument that Mr. Andrews supports his opinions regarding motivation to combine with unsupported conclusory assertions (PO Resp. 5–6), we have considered Mr. Andrews's testimony as well as Patent Owner's arguments as to the issues to be resolved and accorded appropriate weight to his testimony *only* where it is supported by factual evidence. *See Xerox Corp. v. Bytemark, Inc.*, IPR2022-00624, Paper 9 at 15 (PTAB Aug. 24, 2022) (precedential) ("Expert testimony that does not disclose the underlying facts or data on which the opinion is based is entitled to little or no weight.").

IV. PATENT OWNER'S MOTION TO SUBMIT SUPPLEMENTAL INFORMATION UNDER 37 C.F.R. § 42.123 (PAPER 41)

Patent Owner moves to file Exhibits 2037 (Kurt Gunther deposition) and 2038 (James Marchi deposition) as supplemental information relevant to objective indicia of non-obviousness. Paper 41, 1. Patent Owner contends the "proposed exhibits are deposition transcripts of [Patent Owner's] declarants noticed and taken by Petitioners." *Id.* According to Patent Owner, "Exhibits 2037 and 2038 are supplemental information that supports [Patent Owner's] claim that Piper through its employee, David Garcia, had significant and continued access to PO's AURA CAS." *Id.* at 3.

Petitioner responds the "motion is now moot because Petitioners filed those same transcripts as Exhibits 1052 and 1054, respectively, when Petitioners filed their Reply to Patent Owner's Response." Paper 44, 1.

Patent Owner has not filed a Reply on this motion, and we agree with Petitioner that Patent Owner's motion is moot in light of Petitioner's

Exhibits 1052 and 1054. Accordingly, Patent Owner's motion to submit supplemental information is *denied as moot*. Exhibits 2037 and 2038 are therefore not entered into the record.

V. JOINT MOTION TO EXPUNGE PATENT OWNER'S SUBMISSION OF SUPPLEMENTAL EVIDENCE (PAPER 45)

The parties filed a Joint Motion to Expunge (Paper 45), asking that we expunge Exhibits 2028 and 2029, which are supplemental declarations of Mr. Gunther and Mr. Marchi. Paper 45, 1. The parties note that these exhibits were served as supplemental evidence and should not have been filed.

We agree with the parties that exhibits served as supplemental evidence should not have been filed to the record. Accordingly, the joint motion to expunge Exhibits 2028 and 2029 is *granted*.

VI. PATENT OWNER'S MOTION TO STRIKE (PAPER 47)

Patent Owner moves to strike Exhibit 1060 (U.S. Patent No. 6,480,766) and the related portions of Petitioner's Reply (Pet. Reply 20–21) because Patent Owner contends that Exhibit 1060 is used to fill gaps in the prior art not covered by the Petition. Paper 47, 2. Patent Owner contends that in testifying about Petitioner's asserted ground of obviousness of claims 7–9, 17 and 19 in view of Grisham and Nixon (Ground 2A), Petitioner's expert, Mr. Andrews conceded that there is no disclosure "of a track database in Nixon."[22] *Id.* at 6 (citing Ex. 2007, 116:10–12). Patent Owner

[22] Patent Owner contends that Mr. Andrews "testified that GPS locations by themselves were insufficient to determine if two trains were on the same track and one would need a track database." Paper 47, 6 (citing Ex. 2007, 117). We do not find this testimony at the cited portion of Mr. Andrews's deposition.

further contends that Petitioner relies on Exhibit 1060 to support the assertion of its expert at his deposition that the use of a track database would remedy the deficiencies in the use of GPS for determining train location. *Id*.

Petitioner responds that Exhibit 1060 rebuts Patent Owner's "factually inaccurate contention that track databases did not exist at the time of the purported invention, and as such, it is proper reply evidence." Paper 48, 1–2 (citing Pet. Reply 20–21). Petitioner contends that Exhibit 1060 was not offered as new prior art to be combined with references relied on in the Petition, nor was it meant to "fill gaps in the prior art," as alleged by Patent Owner. *Id.* (citing Paper 47, 2). Petitioner contends that Mr. Andrews referred to track databases during his deposition in support of his opinion that a person of ordinary skill in the art would have been motivated to combine Grisham's UWB with Nixon's GPS to be able to determine when trains that are close to one another are actually on different tracks, and therefore are not at risk of colliding. *Id.* at 2–3. Petitioner contends that, in response, Mr. Conti testified that "in [his] personal experience, no such track database existed at the time of the invention." *Id.* at 3 (citing Ex. 2012 ¶ 72 n.3). Petitioner contends that Exhibit 1060 was cited to rebut a factually inaccurate contention presented in the Patent Owner Response, thereby presenting an argument that is consistent with (and not "contrary to") arguments presented in the Petition. *Id.* at 3–4.

Patent Owner, as the "moving party," "has the burden of proof to establish that it is entitled to the requested relief." 37 C.F.R. § 42.20.

We agree with Petitioner that Exhibit 1060 is proper reply evidence and that Petitioner's Reply does not present an improper new argument.[23] As discussed above, we determine that the arguments presented in the Petition sufficiently show a motivation to combine Grisham with Nixon. *See supra* § III.J.2. We do not find Exhibit 1060 necessary to support Petitioner's contentions. Nor are we persuaded that Mr. Andrews "testified that GPS locations by themselves were *insufficient* to determine if two trains were on the same track and one would need a track database," as argued by Patent Owner. *See* Ex. 2007, 115:10–20 ("Well, two different ways. One of them is that many of these applications talk about having a track database"). Because Patent Owner and Mr. Conti argued that such databases did not exist at the time of the invention, we find Petitioner's responsive argument in its Reply citing Exhibit 1060 to be proper.

Accordingly, Patent Owner's Motion to Strike Exhibit 1060 and portions of Petitioner's Reply is *denied*.

VII. PETITIONER'S MOTION TO EXCLUDE (PAPER 54)

Petitioner moves to exclude certain expert testimony in paragraphs 41–50 and 71–74 of the declaration of Carl Conti (Exhibit 2012) under Federal Rules of Evidence 702 and 703 as well as under 37 C.F.R. § 42.65(a). Paper 54, 1–2 (citing *Daubert v. Merrell Dow Pharms., Inc.*, 509 U.S. 579, 592 (1993); *Extreme Networks, Inc. v. Enterasys Networks, Inc.*, 395 F. App'x. 709, 715 (Fed. Cir. 2010)). Petitioner argues that "sufficient evidence has not been provided to show that Mr. Conti has personal

[23] To the extent a track database is relevant, we note that Mr. Andrews cited to another reference in his declaration that also mentions a track database for storing information about tracks and related information. *See* Ex. 1003 ¶ 46 (citing Ex. 1038, 8).

knowledge to support his opinions in paragraphs 41–50 or 71–74 of his declaration." *Id.* at 1–7; Paper 61 (Petitioner's Reply), 1–4.

Petitioner argues that, in paragraphs 41–50 of his declaration, Mr. Conti has provided testimony regarding the use of UWB communication systems in the rail industry prior to the alleged invention of the '131 patent (Ex. 2012 ¶¶ 41–50), but he admitted that he did not have any experience with UWB systems. Paper 54, 3 (citing Ex. 1053, 48:13–24). Instead, Petitioner contends, Mr. Conti's opinions are based on information that he learned as part of his work on this matter. *Id.* at 3–4 (citing Ex. 1053, 116:11–20). Petitioner further argues that Mr. Conti's opinions regarding the long-felt need are based on Mr. Conti's own lack of prior experience and do not reflect the knowledge of the railroad industry as a whole, or of a person of ordinary skill in the art. *Id.* at 4–5 (citing Ex. 1053, 48:13–24, 113:19–115:5, 133:15–134:23, 150:2–151:19, 153:17–24). Petitioner therefore contends that Mr. Conti's testimony is nothing more than speculation. *Id.* at 5 (citing Fed. R. Evid. 702(b); 37 C.F.R. § 42.65(a))

Similarly, as to paragraphs 71–74 of Mr. Conti's declaration, Petitioner contends that his opinions on the efficacy of using GPS in combination with UWB lack any factual support. Paper 54, 6 (citing Ex. 2012 ¶¶ 71–74). Petitioner argues that Mr. Conti once again lacks prior experience with UWB systems and his opinions are inadmissible. *Id.* at 6–7 (citing Fed. R. Evid. 702(b); 37 C.F.R. § 42.65(a)).

Patent Owner responds that Petitioner's complaints go to the weight, not admissibility, and the challenged paragraphs should not be excluded. Paper 57, 1. Patent Owner argues that Mr. Conti was qualified as a percipient industry participant to comment on long felt need and provides ample support for his opinions. *Id.* at 2 (citing Ex. 1053, 14:20–15:8,

24:18–26:22, 52:19–53:10, 54:6–56:16, 80:1–6, 81:7–21, 154:7–155:9, 155:14–156:21, 157:11–159:6, 159:20–161:3, 161:24–162:14). Patent Owner also argues that Mr. Conti's testimony on skepticism in the prior art as well the ultimate conclusion of obviousness should not be excluded because there is sufficient factual support for those opinions. *Id.* at 2–3 (citing Ex. 1053, 154:7–155:9, 155:14–156:21, 157:11–159:6, 159:20–161:3, 161:24–162:14, 166:21–168:18).

Patent Owner argues that Mr. Conti's opinions in paragraphs 71–74 are admissible because Mr. Conti, as an expert in railroad safety and familiar with the design constraints in this area and at the time of the invention, conducted an investigation, which coupled with his experience, resulted in his conclusion that the proposed combination goes against the conventional thinking of a person of ordinary skill in the art. Paper 57, 3–4 (citing Ex. 2012 ¶ 75).

Petitioner, as the "moving party," "has the burden of proof to establish that it is entitled to the requested relief." 37 C.F.R. § 42.20.

We have reviewed the challenged portions of Mr. Conti's declaration and agree with Patent Owner that the objection to the specific portions of Mr. Conti's declaration, namely paragraphs 41–50 and 71–74, relate to the proper weight to give to his testimony and not to its admissibility. Expert witnesses may base opinions on information from others, and any flaws in data or factual assumptions go to the weight of the evidence, not admissibility. *See Summit 6, LLC v. Samsung Elec. Co., Ltd.*, 802 F.3d 1283, 1298 (Fed. Cir. 2015); *see also Corning Inc. v. DSM IP Assets B.V.*, IPR2013-00053, Paper 66 at 19 (PTAB May 1, 2014) ("[T]he Board, sitting as a non-jury tribunal, is well-positioned to determine and assign appropriate weight to the evidence presented in this trial.").

As Patent Owner points out, Petitioner does not challenge Mr. Conti's qualifications or his industry experience. Paper 57, 1 (citing Ex. 2012 ¶¶ 4–15, 35–40). Once an expert has been qualified, the gatekeeping inquiry focuses on the expert's methodology and on whether the methodology is sufficiently tied to the facts of the case. *Summit 6*, 802 F.3d at 1298; *see also Extreme Networks*, 395 F. App'x. at 715 (affirming a decision to exclude testimony from a proffered expert who was *not qualified* as an expert in the relevant art).

In this case, Mr. Conti may have based his opinions on information from others or information that he acquired from various sources, but that would affect the proper weight to give his testimony and not its admissibility. To Patent Owner's point, a lack of direct knowledge on certain aspects related to the invention, even for an expert, may in fact support that such knowledge was not common in that industry. Paper 57, 3 (arguing that the fact that, even as an expert in the industry, Mr. Conti was unaware of any UWB based collision avoidance or localization implementation in the railway setting supports, rather than undercuts, his opinions on long felt need). And there is no requirement of a perfect match between the expert's personal knowledge or experience prior to litigation and the opinions being provided in litigation; all that is needed is "an adequate relationship between his experience and the claimed invention." *See SEB S.A. v. Montgomery Ward & Co., Inc.*, 594 F.3d 1360, 1373 (Fed. Cir. 2010). We conclude, therefore, that Mr. Conti's testimony is properly included and relevant to the issues in this proceeding and that Petitioner's objections are properly directed to the proper weight to give to his testimony, not to its admissibility.

For these reasons, we *deny* Petitioner's motion to exclude paragraphs 41–50 and 71–74 of Exhibit 2012.

VIII. PETITIONER'S OBJECTION TO PATENT OWNER'S ORAL HEARING DEMONSTRATIVES

Petitioner filed Petitioner's Objections to Patent Owner's Demonstratives, objecting to demonstrative slides 16, 21–22, 24, 28, 31–32, 35–36, 38, 40–41, 48–50. Paper 64 ("Obj."), 1–3. Petitioner objected to some of these slides as containing materials from Exhibits 2030–36, which were the subject of Patent Owner's motion to submit supplemental information (Paper 38) pending prior to oral argument in this proceeding. We granted Patent Owner's motion to submit supplemental information and *overruled* Petitioner's objections relating to those exhibits. *See* Tr. 14:1–17; Paper 66.

Petitioner objections, except for those related to slides 48–50, (1) have been resolved by our decision granting Patent Owner's motion (Paper 68), or (2) the objected materials relate to Patent Owner's evidence of secondary considerations which, as discussed above, we do not consider because we determine that Patent Owner has failed to show a nexus between such evidence and the invention recited in the challenged claims. *See supra* § III.D.2.h. Petitioner's objections, except for those related to slides 48–50 (discussed below), are therefore *dismissed* as moot.

Demonstrative slides 48–50 relate not to Patent Owner's arguments as to Petitioner's asserted grounds but to Patent Owner's argument that Mr. Andrews's opinions should not be accorded any weight. Petitioner contends that portions of Mr. Andrews's deposition cited on slides 48–50 were never cited in a paper. Obj. 3. As discussed above, we have

considered Patent Owner's arguments as presented in its papers (*see, e.g.*, PO Resp. 5–6, PO Sur-reply 9–10), and accorded Mr. Andrews's testimony appropriate weight. Mr. Andrews's deposition is part of the record and we may rely on any portion of his deposition in determining the appropriate weight to be accorded to his testimony. We, therefore, are not persuaded that Patent Owner's citations to Mr. Andrews's statements in its demonstratives, to support Patent Owner's arguments already presented in its papers, as to the weight to be given to Mr. Andrews's testimony, are entirely improper. Petitioner's objections therefore are *overruled*.

We also note that demonstratives are not evidence. *See* Paper 60, 4 ("Demonstratives also are not evidence, and will not be relied upon as evidence. Rather, demonstratives are visual aids to a party's oral presentation regarding arguments and evidence previously presented and discussed in the papers."); Patent Trial and Appeal Board Consolidated Trial Practice Guide 84 (Nov. 2019) ("Demonstrative exhibits used at the final hearing are aids to oral argument and not evidence."). In this Final Written Decision, we rely solely on the arguments properly presented in the parties' briefs and the evidence of record, not on the demonstratives.

IX. CONCLUSION

For the reasons discussed above, Petitioner has demonstrated, by a preponderance of the evidence, that claims 1–16 of the ’131 patent are unpatentable, but Petitioner has not demonstrated, by a preponderance of the evidence, that claims 17–20 of the ’131 patent are unpatentable.[24] Our conclusions regarding the challenged claims are summarized below:

Claims Challenged	35 U.S.C. §	Reference(s)/ Basis	Claims Shown Unpatentable	Claims Not Shown Unpatentable
1, 11, 14	103(a)	Grisham	1, 11, 14	
2–4	103(a)	Grisham, Douglas	2–4	
5, 6	103(a)	Grisham, Richardson	5, 6	
10	103(a)	Grisham, McDaniel	10	
12, 13	103(a)	Grisham, Breed	12, 13	
15	103(a)	Grisham, Connell	15	
7–9, 17, 19	103(a)	Grisham, Nixon	7–9	17, 19

[24] Should Patent Owner wish to pursue amendment of the challenged claims in a reissue or reexamination proceeding subsequent to the issuance of this decision, we draw Patent Owner’s attention to the April 2019 *Notice Regarding Options for Amendments by Patent Owner Through Reissue or Reexamination During a Pending AIA Trial Proceeding*. *See* 84 Fed. Reg. 16,654 (Apr. 22, 2019). If Patent Owner chooses to file a reissue application or a request for reexamination of the challenged patent, we remind Patent Owner of its continuing obligation to notify the Board of any such related matters in updated mandatory notices. *See* 37 C.F.R. § 42.8(a)(3), (b)(2).

Claims Challenged	35 U.S.C. §	Reference(s)/ Basis	Claims Shown Unpatentable	Claims Not Shown Unpatentable
16	103(a)	Grisham, Nixon, Connell, McDaniel	16	
18	103(a)	Grisham, Nixon, Richardson		18
20	103(a)	Grisham, Nixon, Richardson, Douglas		20
1, 7, 8, 11–14, 17	103(a) [25]	(Suzuki) or (Suzuki, Grisham)		17
2–6, 18, 20	103(a)	(Suzuki, Richardson) or (Suzuki, Grisham, Richardson)		18, 20
9, 19	103(a)	(Suzuki, Nixon) or (Suzuki, Grisham, Nixon)		19
10	103(a)	(Suzuki, McDaniel) or (Suzuki, Grisham, McDaniel)		

[25] As explained above, given our disposition of the grounds based on Grisham in combination with various references, we do not reach Petitioner's alternative grounds for the same claims based on the combination of Suzuki with various other references.

Claims Challenged	35 U.S.C. §	Reference(s)/ Basis	Claims Shown Unpatentable	Claims Not Shown Unpatentable
15	103(a)	(Suzuki, Connell) or (Suzuki, Grisham, Connell)		
16	103(a)	(Suzuki, Nixon, Connell, McDaniel) or (Suzuki, Grisham, Nixon, Connell, McDaniel)		
Overall Outcome			**1–16**	**17–20**

X. ORDER

It is, therefore,

ORDERED that claims 1–16 of U.S. Patent No. 9,043,131 B2 are determined to be unpatentable;

FURTHER ORDERED that claims 17–20 of U.S. Patent No. 9,043,131 B2 are not determined to be unpatentable; and

FURTHER ORDERED that Patent Owner's motion to supplement (Paper 41) is *denied as moot*;

FURTHER ORDERED that the joint motion to expunge (Paper 45) is *granted*;

FURTHER ORDERED that Exhibits 2028 and 2029 be expunged from the record of this proceeding;

FURTHER ORDERED that Patent Owner's motion to strike (Paper 47) is *denied*;

FURTHER ORDERED that Petitioner's motion to exclude (Paper 54) is *denied*;

FURTHER ORDERED that Petitioner's objections to Patent Owner's demonstratives are *overruled*; and

FURTHER ORDERED that, because this a Final Written Decision, parties to this proceeding seeking judicial review of this Decision must comply with the notice and service requirements of 37 C.F.R. § 90.2.

PETITIONER:

Howard Wisnia
WISNIA P.C.
howard@wisnialaw.com

Steven Moore
DORITY & MANNING, P.A.
moore@dority-manning.com

Vincent Galluzzo
Joshua James
Kassidy Schmitz
Mark Supko
CROWELL & MORING LLP
vgalluzzo@crowell.com
jjames@crowell.com
kschmitz@crowell.com
msupko@crowell.com

Greg Nieberg
WOLF GREENFIELD & SACKS, P.C.
Gneiberg-ptab@wolfgreenfield.com

Thatcher Rahmeier
Zachary Kachmer
FAEGRE DRINKER BIDDLE & REATH LLP
Thatcher.rahmeier@faegredinker.com
Zach.kachmer@faegredrinker.com

PATENT OWNER:

Gregory Schodde
Alejandro Menchaca
Ronald Spuhler
MCANDREWS, HELD & MALLOY LTD.
gschodde@mcandrews-ip.com
amenchaca@mcandrews-ip.com
rspuhler@mcandrews-ip.com