Positive Train Control

White Paper – May 2012

Joint Council on Transit Wireless Communications

TRANSIT TECHNOLOGY SERIES

Contents

Summary **3**
About this White Paper 3
About The Joint Council on Transit Wireless 3
About the Author 3
Acknowledgements 3
PTC Overview **4**
Regulatory History 4
Implications for Railroads 5
Objectives 6
Technical Architecture 7
Technology Funding 9
PTC Solutions **10**
Core Architectures 10
Technology Challenges 11
Vendor Ecosystem **13**
Products 13
Services 20
Appendix A **22**
PTC Implementation Plans 22
Sources & References **24**

All trademarks are the property of their respective owners. No part of this white paper may be copied for any purpose without the written permission of the author. Third party sources of information contained herein are cited appropriately in the end notes.

The Joint Council on Transit Wireless Communications
www.transitwireless.org
jointcouncil@transitwireless.org

Summary

About this White Paper

In 2008 the U.S. Government introduced legislation that requires the implementation of improved safety measures in the rail sector by 2015. These measures include wireless communication systems for Positive Train Control (PTC). This White Paper outlines the technical architecture of PTC and reviews the activities of key players including railroads and equipment vendors.

About The Joint Council on Transit Wireless

The Joint Council on Transit Wireless Communications is a not-for-profit, non-advocacy organization devoted to assisting the passenger transportation industry with their wireless communications needs. Comprising over 160 member organizations, the Joint Council is developing a best-practice blueprint on the deployment of wireless technologies and applications for transit operators.

About the Author

Jim Baker is the Chair, Technology Committee of the Joint Council on Transit Wireless Communications, and author of this white paper. Jim is also founder and CEO of Xentrans, a vendor-neutral wireless communications consultancy based in London and San Francisco. For more information about the Technology Committee, please contact:

jim.baker@transitwireless.org

Acknowledgements

The author would like to thank the following individuals who reviewed and contributed to this white paper:
Jon Adams (Lilee Systems), Thomas Brown (Harris Corporation), William Everett (ARINC), Brian Kopp (The Semaphore Group) and Shahin Sadri (GE Energy Management).

PTC Overview

Regulatory History

The Rail Safety Improvement Act of 2008[1] as enacted by Congress requires all Class I railroads and passenger rail operators to implement a mandatory Positive Train Control (PTC) collision avoidance system by December 31st 2015. The technology must be installed on all main-line track where intercity passenger railroads and commuter railroads operate, as well as on lines carrying toxic-by-inhalation hazardous materials. Existing safety systems use spaced, track-side equipment to determine train location within a block of track, and a relatively simplistic colored-light notification system for drivers. PTC introduces continuous GPS-based location and speed tracking, with more sophisticated on-board wireless technology for enforcing movement authority from a centralized control center, wherever the vehicle may be. PTC will be inherently more reliable, and offer greater real-time functionality than conventional systems.

The Rail Safety Improvement Act was prompted by a major train accident in Chatsworth Calif. in September 2008 involving a head-on collision between a Union Pacific freight train and a Metrolink commuter train; twenty-five people died, and over one hundred and thirty injured. The cause was later determined to be human error. It was generally acknowledged[2] by rail bodies including the Federal Railroad Administration (FRA) and National Transportation Safety Board (NTSB) that PTC would have prevented such a collision, as it would have automatically stopped the trains rather than relying on an engineer to physically respond to a stop signal. Existing train signal systems such as Automatic Train Control (ATC) and Automatic Train Stop (ATS) used in many U.S. rail networks are 'reactive' systems, which means they wait for train engineers to acknowledge alarms and would not prevent collisions under all circumstances[3].

Congress moved swiftly to enact legislation, bringing the Rail Safety Improvement Act (RSIA) into law the following month, with the support[4] of the Association of American Railroads (AAR).

Implications for Railroads

PTC is the single-largest regulatory cost ever imposed on the industry by the Federal Railroad Administration, according to the AAR. An April 2010 report[5] by Oliver Wyman – commissioned by the AAR – estimated that installing and maintaining PTC systems will cost Class 1 railroads up to $13 billion over the next 20 years. Those costs include equipping 71% of the Class 1 locomotive fleet (approximately 20,000 locomotives) with PTC devices, and installing PTC on 78% of the Class I mainline rail network (an estimated 73,467 route-miles), and installing 125,000 wayside units. Without federal funding available specifically for PTC, rail operators face the prospect of massive costs to meet the implementation deadline in 2015 to the detriment of other necessary capital investments. In 2010 alone, Class 1 railroads spent approximately 8% ($700 million) of their $9 billion annual capital budget on the first phases of PTC implementation[6], with expenditure expected to increase to $1.2 billion in 2011. Additionally the total cost of PTC for passenger rail operators is expected to exceed $2 billion[7].

Initially supportive of PTC, the AAR has been critical of the PTC timetable, financial burden, and lack of business benefits outside those of passenger and rolling stock safety. In a suit filed against the FRA in early 2011[8], the AAR sought to reduce rail operators' costs by easing certain rules including those that defined the total track mileage over which PTC would have to be installed, and the requirement for dual displays in every PTC-equipped locomotive. The AAR and FRA settled[9] the suit with the FRA agreeing to redefine some rules that will result in a 10% reduction in the number of track miles required to have PTC protection, which could amount to overall savings of more than $1 billion in capital expenditure[10].

PTC remains a politically contentious subject in an already financially-burdened industry. The 2015 deadline may yet be extended to 2020. Railroads subject to the PTC mandate were required[11] to submit a detailed PTC Implementation Plan by April 2010. A total of forty U.S. and Canadian railroad operators submitted plans – these are listed in Appendix A.

Objectives

A key objective of PTC regulation was to unify a disparate group of safety technologies under a common set of standards. Prior to October 2008, PTC adoption was voluntary and larger railroad operators including the four largest Class 1s – Union Pacific (UP), BNSF, CSX and Norfolk Southern (NS) – were already implementing pilots of advanced train control systems, albeit with proprietary technologies that lacked common standards for hardware and wireless spectrum, and varied in feature sets. The RSIA introduced two key technical mandates; the first was that all PTC systems must be interoperable to the extent that any railroad's locomotive can operate on any other railroad's track using the same signaling and control systems. The second was a set of core objectives defining the functionality of a PTC system that must prevent:

- Train-to-train collisions
- Over-speed derailments
- Incursions into established work zone limits
- Movement of a train through an improperly aligned wayside switch

While few would argue with the merits of such a standardized system, there were concerns about the shortage of time placed on rail operators by the RSIA legislation; the large capital investment required for implementation; the relatively small market of technology suppliers and system integrators; the lack of suitable radio spectrum; and lack of an interoperability standard. To address these concerns, UP, BNSF, CSX and NS jointly announced in 2008 that they would form the Interoperable Train Control Committee to develop PTC interoperability standards for wide range of components including messaging format, braking algorithm, hardware platforms, and utilization of the 220MHz frequency for the PTC wireless communications network[12]. To facilitate the latter a commercial partnership[13] was formed that purchased 220MHz licenses for the express use of PTC technology, provide spectrum access to other operators and vendors on a licensing basis[14].

Technical Architecture

PTC is an overlay technology on existing ***reactive*** train control systems such as Automatic Train Control (ATC) and Automatic Train Stop (ATS) which would not prevent collisions under all circumstances. PTC involves robust, ***predictive*** technology that detects upcoming conditions and takes control of the train when needed. PTC technical architecture comprises four key segments; Back Office, Communications, Locomotive, Wayside, and Maintenance of Way (MOW).

PTC Core Segments

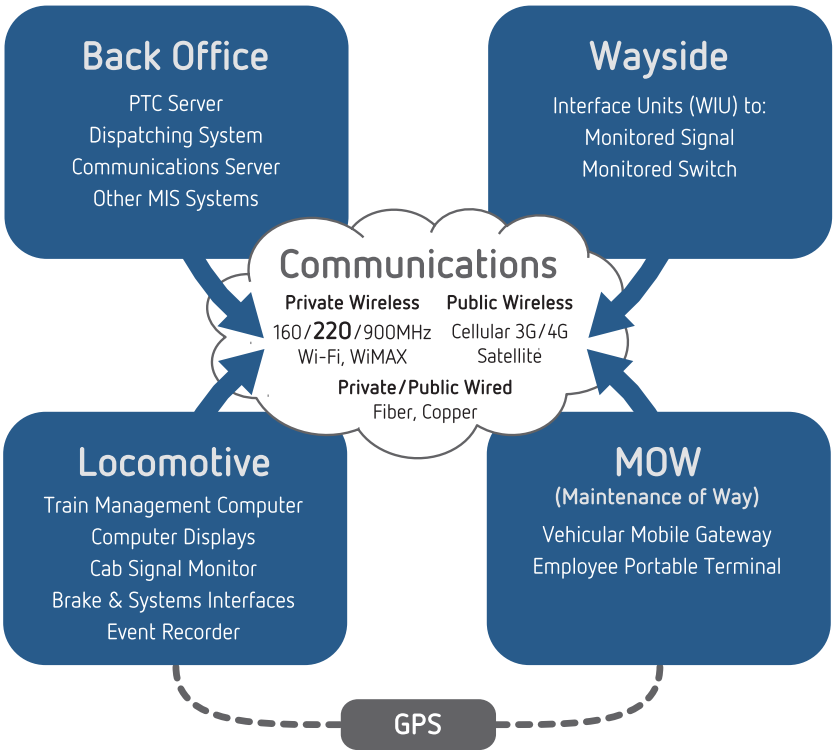

The Back Office typically comprises a computer-aided dispatching system, and a PTC server and database storing information about tracks, train consists, work zones, and speed restrictions. The Back Office issues movement authorities to Locomotives based on aspect information received from PTC-enabled Wayside signals and switches, location information received from trains, and work status from Maintenance of Way vehicles and personnel. PTC improves upon in-track transponder-based train positioning

through the use of augmented GPS that provides more accurate location. Use of GPS also mitigates the significant cost of deploying in-track transponders (balises) on railroads nationwide.

PTC Operation

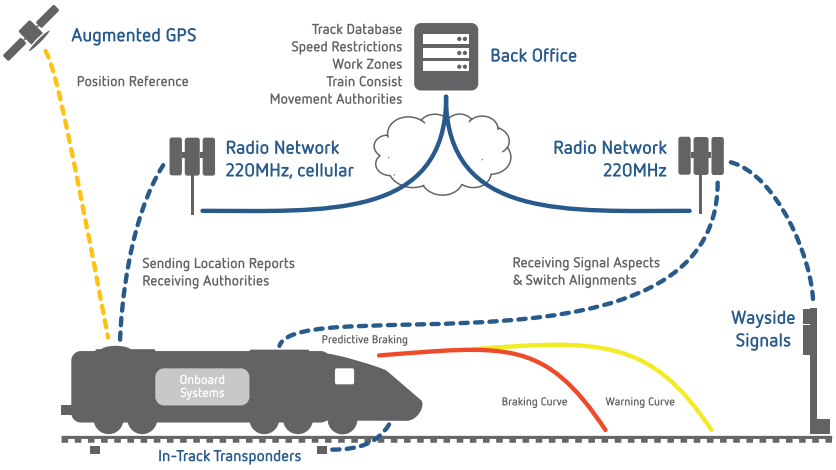

Wireless network facilities are key to the successful deployment of PTC yet in the RSIA mandate there was no common standard for PTC radio spectrum. Advanced Train Control System (ATCS) – an early open standard developed by all railroads – primarily used 900MHz radio channels, while Advanced Railroad Electronic System (ARES) – a competing system developed by BNSF – used only 160MHz radios. PTC required a common radio platform and 220MHz VHF was chosen for the following key reasons:

- Existing 160MHz channels were too congested;
- 900MHz channels could not support sufficient data load;
- 220MHz had suitable propagation characteristics and was priced right; other frequencies were too expensive to acquire.

Typically 220MHz will be used to communicate between wayside systems and the locomotive, and in many cases between the locomotive and the intermediary network to the back office. Some deployments may use multi-radio systems for back office communication from the locomotive and maintenance-of-way vehicles (e.g. hi-rail) including 220MHz, public cellular networks and private trackside fixed wireless infrastructure.

Technology Funding

There are no federal stimulus funds available to help underwrite the cost of PTC implementation for freight operators. However $50 million in Railroad Safety Technology Program grants, administered by FRA, were made available in late 2010 to help develop essential PTC technologies[15]. Almost 50% of this ($21 million) was awarded to MeteorComm to build "the required radio platform for an interoperable communications network across multiple railroads". $12.8 million went to Amtrak to develop interoperability between the operator's ACSES system and the Class 1s' V-EMTS, and a further $13 million between other regional operators towards systems' interoperability.

Implementation Investment – Case Study

Union Pacific (UP) operates over 32,000 miles of track in the United States of which it owns 26,000 miles outright, making it the largest Class 1 operator in North America. In 2010 UP had revenues of $16.9 billion, income of $2.78 billion, and 42,000 employees. With BNSF, CSX and NS, UP is developing PTC interoperability standards and co-owns 220MHz licenses. UP estimates[16] its cost of PTC implementation to exceed $1.5 billion with the following detail:

Investment	Quantity
Track length for PTC installation	19,500 (60% of track total)
Wayside Interface Units	12,664
Signal System Upgrades	976 transistor-based track circuits
Locomotive systems	6,000
Telecommunications	970 base stations
Back Office	Centralized
Training/Implementation	23,000+ employees

PTC Solutions

Core Architectures

Prior to the RSIA in 2008 there had been multiple train control initiatives based on various technologies and systems from different vendors. By early 2009 there were no less than eleven different PTC projects involving nine different railroads in sixteen states, covering 4,000 track miles[17]. With the consolidation of efforts by the Interoperable Train Control Committee (ITC) two major technical architectures have emerged:

- Amtrak NEC – Advanced Civil Speed Enforcement System (ACSES)
- ITC – Interoperable Electronic Train Management System (I-ETMS)

Amtrak ACSES

Amtrak has implemented ACSES on the Northeast Corridor (NEC) between Boston and Washington DC, utilized for the high-speed inter-city Acela Express and regional commuter services. ACSES supplements the existing cab signal and automatic train control system, providing full PTC functionality in support of operations up to 150 mph. Initiated in 1998 and designed by Alstom, by 2010 ACSES was installed on 600 trains and 400 miles of track. Unlike ITC V-EMTS which uses GPS for real-time positioning, ACSES uses trackside transponders for location verification combined with tachometer based intermediate positioning. Amtrak plans to have 1,600 miles equipped by 2012, and 4,600 miles by the PTC deadline of 2015 including interoperability with all third party regional commuter agencies (such as Metro-North, NJ Transit, LIRR and SEPTA) and core railroads (such as MBTA, ConnDOT and CSX)[18]. The FRA awarded Amtrak $12.8 million in 2010 to develop interoperability between ACSES and the ITC V-ETMS architecture being developed by the four major Class 1s. This includes implementation of 220MHz ITC radio systems alongside the existing 900MHz ACSES radios. Alstom's onboard PTC efforts are concentrated in transit rather than freight, with ACSES currently being the only PTC system in revenue service under the RSIA regulations and the first such system to receive FRA approval[19].

ITC I-ETMS

ITC standardized on the ETMS platform offered by US-based Wabtec Railway Electronics as it met all the RSIA PTC requirements and was already in trials by many of the Class 1s and other rail operators. In addition ETMS provided advanced features such as predictive enforcement timing and monitoring of track integrity, and had integrated components within each of the Locomotive, Back Office and Wayside PTC segments. The ITC implementation of Wabtec ETMS requires 'vital' functionality which encompasses additional fail-safe and redundant systems that result in an extremely low probability of undetected failure, and the ability to recover from a failure to a safe state. I-ETMS ('I' standing for Interoperable) is radio-agnostic, although typical deployments will use 220MHz radio spectrum for locomotive and wayside communications. Software Defined Radio (SDR) technology from US-based vendor MeteorComm is being used in these cases. In 2007 MeteorComm was acquired by BNSF to provide wireless connectivity to the Wabtec ETMS system upon which BNSF had previously standardized, and in which UP, NS and CSX took an interest following the creation of the ITC in 2008. In March 2011 Wabtec was awarded[20] a $27 million contract by Parsons for I-ETMS PTC implementation on the 512-mile Metrolink rail system in Southern California. As a result of its acceptance by ITC, Wabtec's I-EMTS solution will become the main technical architecture for PTC in North America. It should be noted however that recently the FRA provided PTC type acceptance for the Incremental Train Control System (ITCS) deployed on Amtrak's Michigan line[21] between Chicago and Detroit.

Technology Challenges

The federally mandated timeline for PTC deployment has necessitated a fast track schedule for all PTC-related technologies, including communications. Core to the latter are RF spectrum and data radio systems, yet there are limitations of available bandwidth, incomplete radio system requirements, and limited approved radios offered by manufacturers. There is additional complexity deploying PTC in commuter environments given that the commuter railroads have, for the most part, chosen to adopt PTC protocols designed and initially deployed for non-commuter operations.

Spectrum

Through their commercial partnership, the freight-oriented Class 1 railroad operators have acquired spectrum licenses nationwide in the 220-222MHz range, comprising 275 KHz in 25 KHz channels in most areas[22]. While this is sufficient for PTC applications in rural and most urban environments, it presents a challenge in higher density urban environments. The high-volume transit operations of large metropolitan transportation agencies will place much greater demand on communications network capacity and throughput. As a result, availability of sufficient radio spectrum in high density rail corridors presents a problem that will need to be fully addressed in advance of the 2015 deployment deadline. Commuter rail operators may utilize commercial cellular networks (which present risks of availability and quality of service) or alternative licensed bands in the 217-220MHz range (which presents challenges of spectrum acquisition and sourcing suitable radios). Spectrum aggregators such as Skybridge Spectrum Foundation[23] seek to leverage the demand for PTC spectrum by sub-licensing holdings in compatible bands.

Radio Systems

Though RSIA did not specify particular spectrum for PTC, the Class 1s have consolidated around 220MHz, and invested in MeteorComm for the express purpose of developing radio technology for PTC. While MeteorComm's focus is on primarily delivering a solution that meets freight railroad specifications, interoperability is a key requirement of PTC; MeteorComm and Amtrak have both received federal funding to ensure such interoperability. Issues of radio compatibility with varying spectrum can be addressed through the use of SDRs that can tune to specific channel ranges as required, between 217-220MHz for example, via instructions provided remotely to a train's onboard systems. The fact remains that MeteorComm is a single source, and concerns have been voiced about the lack of a wider competitive market[24]. It should be expected that other vendors will address the 220MHz opportunity with SDRs; for example GE Microwave Data Systems (MDS) offers industrial SDR wireless products[25] that, in addition to their TD220X radio, have undergone testing with railroads including Union Pacific and Norfolk Southern.

Vendor Ecosystem

The PTC vendor ecosystem comprises a relatively small number of suppliers, and which fall into two primary categories of Products and Services. Exhaustive research into each is outside the scope of this report, but can be summarized along with the respective key players that are actively engaged in PTC development, field testing and deployment.

Products

Products can be defined as hardware and software solutions that comprise PTC systems for Back Office, Locomotive, Wayside and MOW applications.

Wabtec Corporation

US-based Wabtec Corporation is probably the most significant vendor in the PTC space. With sales of over $1.4 billion in 2009, the company employs 50,000 people in fifty locations worldwide. Wholly-owned subsidiary Wabtec Railway Electronics has a diverse product portfolio including electronic air brakes, digital event and video recorders, and its ETMS solution upon which the Class 1s have standardized for PTC architecture. Wabtec designs and manufactures components for Office, Locomotive and Wayside segments.

Its Train Management Computer (TMC) forms the heart of a locomotive's onboard system, with peripherals including computer display units, signal monitor, and interfaces to braking systems and event recorder (which Wabtec also manufactures). The TMC interfaces with a third party Communications Management Unit (CMU) that provides connectivity to wireless networks including 220MHz PTC, 900MHz ATCS, Wi-Fi and commercial cellular and satellite networks. For 220MHz VHF data radio communications, Wabtec has partnered with MeteorComm; the first major deployment of the Wabtec/MeteorComm I-EMTS PTC solution is for Parsons on the Metrolink rail network in Southern California.

Wabtec Onboard TMC Topology

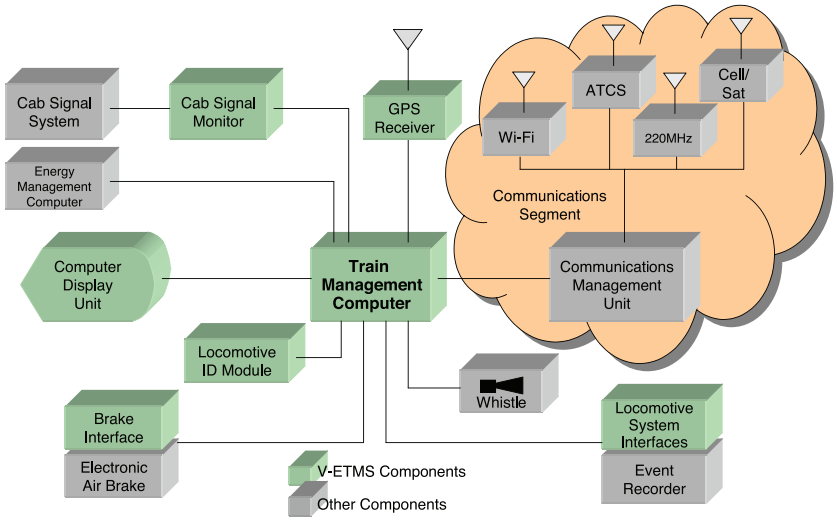

MeteorComm

US-based MeteorComm was acquired by BNSF in 2007 and subsequently now wholly owned by four Class 1 railroads – BNSF, UP, CSX and NS. It is the predominant supplier of 220MHz SDR technology to the freight industry's PTC initiative. PTC radio systems will operate nationwide from 220 to 222MHz, although these radios should support lower limits of the spectrum range to 217MHz if required. Use of SDR enables MeteorComm radios to address such frequency selection. In October 2008 the company won the contract to manage the Higher Performance Data Radio (HPDR) project funded by the FRA and run by Transportation Technology Center Inc. (TTCI). The HPDR project focuses on the development of a radio that can integrate voice and digital data at 160MHz, and provide the necessary throughput to support foreseeable development of railroad communication needs. Information pertaining to the company's 220MHz SDR specifications have been sparse and could be perceived as a reluctance to share details in an open market during the development stages. This may limit the ability of other radio vendors to ensure compatibility and interoperability with MeteorComm's solution. MeteorComm filed a patent application[26] in the United States on September 23rd 2010 for 'Systems and Methods for Interoperability in Positive Train Control' that, if granted, could limit competition in the PTC radio market. MeteorComm will also license radios for sale through OEM CalAmp.

General Electric

US-based General Electric (GE) has two divisions active in the PTC arena: GE Transportation Systems (GETS) and GE Microwave Data Systems (MDS). GETS specialize in the manufacture of locomotives, onboard systems (including computers, video cameras and 160MHz voice/data radios), and wayside equipment for signal and crossing control. Of the 100,000+ wayside signal devices in North America, GE/Harmon manufactured the majority of the microprocessor-controller version[27]. Additionally GETS provides systems for operations control center Back Office applications including route and schedule planning, safety and security, passenger information, and wide area network (WAN) design and deployment.

FRA Universal Onboard Platform

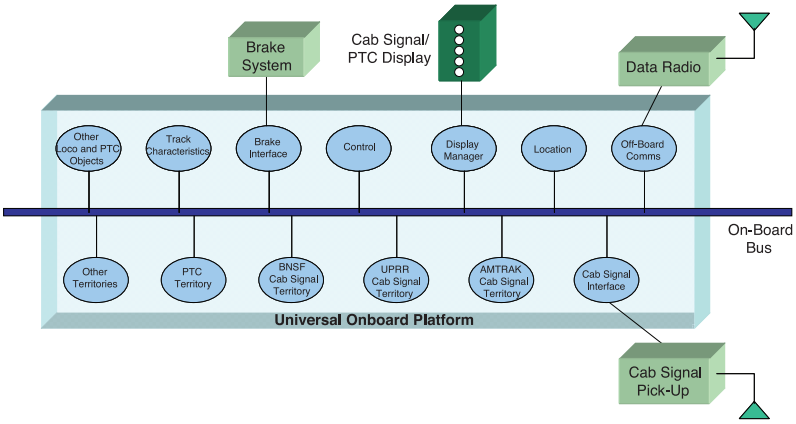

In 2007 the FRA provided $4.5 million to the Railroad Research Foundation[28] to fund a joint project with the AAR Locomotive Committee and ARR Railway Electronics Standards Committee for development and testing of wireless communications devices on trains. A primary aim was to design and build a single hardware and software Universal Onboard Platform (UOP) for onboard applications, and allowing a locomotive to easily switch between different PTC operating systems when it travels from one railroad network to another. Following an RFP, GETS was selected as the primary vendor for this project, using its LOCOCOMM[29] on-board computer as the basis of the platform. Adding PTC to wayside equipment, in February 2011 GETS released a PTC messaging-compliant upgrade to its wayside Vital Harmon

Logic Controller[30] (VHLC) which provides control of power switches and DC lighting of signal lamps.

GE MDS (which operates independently from GETS) designs and manufactures long distance, software defined IP/Ethernet radio communications equipment including the MDS SD Series[31] capable of operating in the 216-220 MHz bands. GE MDS has been working with several Class 1 railroads on interoperability, as a complement or alternative to MeteorComms solutions. The company's TD220X radio has been selected for projects including Amtrak NEC, SEPTA (with Ansaldo), New Jersey Transit (with Parsons), and MRS in Brazil.

Eurotech SpA

Italy-based Eurotech SpA is a leading manufacturer of industrial computers and embedded boards, with operations in the United States, Europe and Japan. In 2003 the company acquired Parvus Inc., a leader in rugged in-vehicle computers and subsequently supplier of passenger Wi-Fi systems to Boston's MTBA[32] and Utah Transit Authority[33] among others.

Parvus has since moved primarily into the defense space, transferring transportation products to Eurotech Inc. in Maryland. In March 2011 the company announced[34] that its ISIS XL[35] Intel Atom embedded board had been chosen by MeteorComm as one of two reference designs for PTC applications. According to Eurotech, PTC Wayside Messaging Servers (WMS) must incorporate an embedded computer such as the ISIS XL certified to run Red Hat Enterprise Linux (RHEL) and the MeteorComm communications stack. Eurotech has been active at many US rail-oriented conferences and exhibitions in 2010 and 2011 and appears committed to PTC as a market opportunity.

Alstom

France-based Alstom is a leader in the supply of rolling stock, transport infrastructure and signaling, and global rail systems including high speed trains. In 2010 the company had sales of €21 billion and over 93,000 employees worldwide. Alstom Signaling North America[36] designed the transponder-based ACSES II PTC solution in service with Amtrak on the

Northeast Corridor (NEC), integrating Automatic Train Control (ATC), Cab Signaling Systems (CSS), Speed Enforcement Systems (SES) and radio-transmitted temporary speed restrictions at 220MHz and 900MHz. The ACSES II system uses GE MDS SD radios for wireless communications to support freight PTC at 220MHz and ACSES PTC at 900MHz.

ACSES II PTC Network Topology

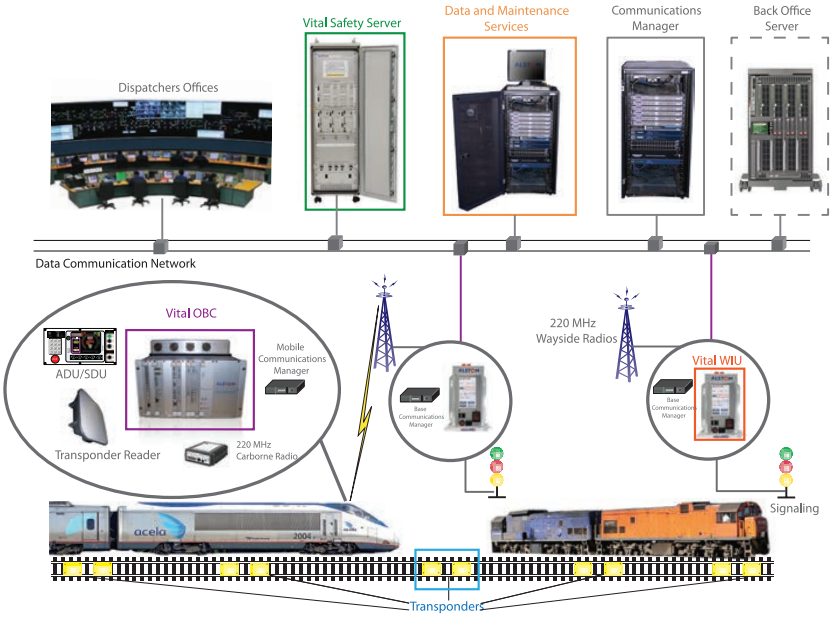

In February 2011 Alstom announced[37] the company had supplied Amtrak with 250 PTC-compliant wayside interface units (WIUs) to be deployed along the NEC and connecting corridors. The IP-based, stackable WIU supports simultaneous operation of AAR/ITC and ACSES protocols. Alstom has deployed and maintained a robust PTC solution for Amtrak, but in light of ITC standardization by Class 1 railroads it is unclear whether it will have significant further penetration of the US market for PTC outside the NEC and ancillary corridors.

Ansaldo STS

Ansaldo STS is a wholly-owned subsidiary of Italy-based Finmeccanica, one of the top ten global players in aerospace, defense and security. Finmeccanica also owns 11% of Eurotech SpA. Ansaldo has a wide range of solutions for freight, intercity rail and mass transit, and is known for its VitalNet collision avoidance deployment with Alaska Railroad. The company

supplied transponders and other components in the Northeast Corridor (NEC), while developing ACSES-compliant versions of its VitalNet PTC solution. VitalNet integrates wayside, onboard and office segments, in a vital capacity, and seamlessly transitions between signaled and dark territory while leveraging MeteorComm radios for wireless communications. As a result, Ansaldo competes in these segments with Alstom, GETS, and Wabtec. Ansaldo offers an IP-based Wayside Messaging Server (WMS) but it is not known if this device uses a Eurotech embedded board, the absence of which would also potentially put it in competition with MeteorComm in that segment. In January 2011 Ansaldo announced[38] it had won contracts worth $18 million with Bombardier and Kawasaki Rail Car to supply MicroCab-based ATC systems on rolling stock for New Jersey Transit (NJT) and Washington Metropolitan Area Transit Authority (WMATA), both of which are required to interoperate with the NEC ACSES II system. Ansaldo's PTC experience has been limited to stand-alone systems (Alaska) and ACSES-compliant systems (NEC), so like Alstom their potential is uncertain in the wider ITC-based PTC rail market.

ARINC

ARINC is a US-based engineering and communications company with 3,200 employees worldwide, and operations in aerospace, defense, aviation, public safety and mass transit. The company considers itself the leading provider of passenger rail control systems in North America, with approximately 30 rail control systems deployed including Amtrak's NEC operations. In February 2011 the company announced[39] it would deliver the Back Office Server (BOS), Computer-Aided Dispatch (CAD) and Employee-in-Charge terminals for the Parsons-developed PTC system for Metrolink in Southern California. ARINC will also supply the overall network management system, and is developing the BOS component under contract to Wabtec for three freight rail customers and for Metrolink.

Invensys Rail NA

Invensys Rail North America is a wholly-owned subsidiary of UK-based Invensys Group which employs 20,000 people in 50 countries. As a leader in ERTMS solutions Invensys also owns Westinghouse Rail Systems, Dimetronic Signals and Safetran Systems. In 2008 Invensys Rail NA

acquired Quantum Engineering, developer of Train Sentinel, a PTC solution in operation on the Panama Canal Railway since 2006. The solution is now being marketed by Safetran Systems and launched in May 2009[40]. Safetran has in the past worked in collaboration[41] with GETS and Union Switch & Signal (US&S) in developing a communications-based signaling solution prior to its acquisition of the Quantum solution. Train Sentinel comprises locomotive and wayside components. It is not clear if this solution is in active development, as the PTC section on the Safetran web site is not currently available.

Lockheed Martin

US-based Lockheed Martin was involved in an early PTC system pilot in 2000 for Union Pacific with Wabtec and Ansaldo STS. The test deployed PTC on a 120-mile segment between Chicago and St.Louis. The company has since developed a PTC solution comprising products for Locomotive (Location Control Unit) and Office (PTC Server) segments. In 2009 Lockheed announced an Advanced Train Management System (ATMS) deployment with the Australian Rail Track Corporation with an infrastructure very similar to an ITC-compliant PTC topology, with GPS-based positioning and IP-based wayside interface units[42]. There have been no further announcements by Lockheed on progress with PTC in the United States.

Lilee Systems

Lilee Systems is a Silicon Valley-based company focused on a wireless networked solution to PTC, CBTC, and mobile IP communications, including industrial-grade 220MHz software-defined radios for locomotive, wayside and network base station locations, a back-office-based mobility controller, Wayside Messaging Server, and other hardware and software components important to deploy PTC solutions. As well, it has developed a number of analysis tools that can improve the ability to predict RF propagation in a high mobility network, and monitor network performance in real or near-real time at the physical layer level. To date, the company's equipment has been purchased for use in a major western passenger transit system, and Lilee Systems has partnered with a number of larger systems integrators proposing PTC communications solutions for other major U.S. projects.

Services

Services refer to planning, engineering design, development, testing, project management and implementation, and maintenance of PTC deployments.

Parsons

Parsons Corporation is an international civil engineering, construction, technical, and management services firm. The company has over 12,000 employees and revenues of $2.7 billion in 2010. Parsons is engaged in multiple PTC projects, including New Jersey Transit and Metrolink, with PTC practices in Philadelphia PA and Rancho Cucamonga CA. Parsons was an early integrator for PTC, having been part of the project team responsible for the Chicago-St. Louis IDOT PTC initiative led by Lockheed Martin. Parsons has since been involved in PTC projects with Caltrain, Utah Transit Authority, and BNSF. In late 2010 Parsons won[43] a $120 million contract with the Southern California Regional Rail Authority to design, procure, and install PTC technology on Metrolink's 512-mile regional commuter rail system, the first of its kind to be awarded in the U.S. rail industry. The project includes office segment systems; locomotive systems comprising on-board computers, display screens, GPS tracking, and radios on 57 cab cars and 52 locomotives; and wayside segment stop enforcement systems at 476 wayside signals. In late March 2011 Parsons began to recruit for a project leader for a similar deployments for New Jersey Transit, which will include interoperability with Alstom ACSES II and utilize Meteorcomm 220MHz ITC-compliant radios.

Xorail

Xorail is a leading US-based railway signal engineering and construction company. Xorail provides services including design solutions for wayside signaling, positive train control systems, highway grade crossing warning systems, site surveys, systems integration, and field construction and installation of wayside equipment. The company has 10 satellite offices throughout North America with about 275 employees. PTC projects undertaken by Xorail include SamTrans in the San Francisco Bay Area. Xorail was acquired[44] by Wabtec for $40 million in March 2010 in a move

intended to position Wabtec for a larger role as the rail industry implements PTC technology over the next several years. In March 2011 Xorail signed a $165 million contract to design and install Communications-Based Train Control for MRS Logistica, which operates the Southeastern Federal Railroad Network in Brazil. The project will use TD220X radios from GE MDS.

Others

There are several other engineering and project management companies who are involved in rail technologies, and for whom PTC may play a role in the future. These include but are not limited to:

- Parsons Brinckerhoff
- Booz Allen Hamilton / CH2M HILL
- SAIC
- Stantec
- ARINC

IEEE 802.15 Positive Train Control Group

In the fall of 2011, the IEEE 802.15 Positive Train Control group was formed to investigate the establishment of a worldwide-applicable open standard for the wireless component of PTC systems. The group has grown to over 60 entities including equipment manufacturers, U.S. government and foreign agencies, transit systems integrators, semiconductor manufacturers, academic institutions, transit and rail industry associations, and rail and rail transit operators. The group is focus explicitly on the RF/PHY/MAC for the wireless component to be used for PTC applications around the world, especially for those regions where PTC systems offer a more cost-effective safety system than ERTMS or CBTC currently offers. The progress of the group has been rapid, with expectations for a baseline proposal expected for Q4 of 2012. This standard may represent the next generation of fully interoperable wireless technology for not only PTC but other rail and transit functions that may be integrated into existing 220MHz-based systems.

Appendix A

PTC Implementation Plans

The following U.S. and Canadian railroads submitted PTC Implementation Plans to the FRA by the April 26th 2010 deadline:

Railroad	FRA Docket Number
Alaska Railroad (ARR)	FRA-2010-0054
Amtrak (ATK)	FRA-2010-0029
Belt Railway Company of Chicago (BRC)	FRA-2010-0062
BNSF	FRA-2010-0056
Buckingham Branch Railroad (BB)	FRA-2010-0063
Canadian National (CN)	FRA-2010-0057
Canadian Pacific Railway (CP)	FRA-2010-0058
Capital Metropolitan Transportation Authority (CMTY)	FRA-2010-0072
Conrail Shared Assets Corporation (CRSH)	FRA-2010-0064
CSX Transportation (CSX)	FRA-2010-0028
Kansas City Southern Railway (KCS)	FRA-2010-0059
Kansas City Terminal Railway (KTC)	FRA-2010-0065
Long Island Railroad (LI)	FRA-2010-0031
MARC Train Service (MACZ)	FRA-2010-0038
Massachusetts Bay Transit Authority (MBTA)	FRA-2010-0030
Metro North Commuter RR Co (MNCW)	FRA-2010-0032
Minnesota Commercial Railway (MNNR)	FRA-2010-0066
Nashville Regional Transportation Authority (NRTX)	FRA-2010-0040
New England Central Railroad (NECR)	FRA-2010-0067
New Jersey Transit Rail Operations (NJTR)	FRA-2010-0033
New Mexico Rail Runner Express (NMRX)	FRA-2010-0045
Norfolk Southern (NS)	FRA-2010-0060
North County Transit District (SDNX)	FRA-2010-0049

Railroad	FRA Docket Number
Northeast IL Regional Commuter Rail Corp. (NIRC)	FRA-2010-0042
Northern Indiana Commuter Transportation District (NICD)	FRA-2010-0043
Pan Am Railways (GRS)	FRA-2010-0068
Peninsula Corridor Joint Powers Board (PCMZ)	FRA-2010-0051
Port Authority Trans Hudson (PATH)	FRA-2010-0034
Portland & Western Railroad (PNWR)	FRA-2010-0073
Sounder Commuter Rail (SCR)	FRA-2010-0053
South Florida Regional Transportation Authority (SFRV)	FRA-2010-0039
Southeastern Pennsylvania Transportation Authority (SEPA)	FRA-2010-0036
Southern California Regional Rail Authority (SCAX)	FRA-2010-0048
Terminal Railroad Association of St. Louis (TRRA)	FRA-2010-0070
Tri-Met Westside Express Service (TMEV)	FRA-2010-0055
Trinity Railway Express (TRE)	FRA-2010-0044
Union Pacific Railroad Co. (UP)	FRA-2010-0061
Utah Transit Authority FrontRunner Commuter Rail (UFRC)	FRA-2010-0052
Vermont Rail System (VTR)	FRA-2010-0071
Virginia Railway Express (VREX)	FRA-2010-0037

The full plans for each railroad, including responses from the FRA and subsequent updates, can be searched for by Docket Number and downloaded at http://www.regulations.gov

Sources & References

[1] Library of Congress 'Railroad Safety Improvement Act of 2008'. http://bit.ly/lXOi00

[2] Clerici, Kevin (2008-09-16) Ventura County Star. http://bit.ly/lraIGj

[3] BNSF (2008-10-09) 'BNSF Forges Ahead with ETMS as Industry Leaders Agree to Establish PTC Interoperability Standards'. http://bit.ly/laCc4A

[4] Association of American Railroads, Washington, DC (2008-09-24). http://bit.ly/jbtSRw

[5] Oliver Wyman Inc. (2010-04-23) 'Assessment of the Commercial Benefits of Positive Train Control'. http://bit.ly/m9uH1z

[6] RailResource (2010-05-11) 'BNSF Chief Warns of PTC Mandate's Unintended Consequences'. http://bit.ly/mIpypK

[7] RailwayAge (2010-06-07) 'PTC: A passenger operator perspective'. http://bit.ly/gPRGIB

[8] RT&S (2011-03-17) 'AAR to Congress: Freight rail investments propel safety achievements'. http://bit.ly/kaOIwG

[9] Progessive Railroading (2011-03-07) 'FRA, AAR agreement would reduce route miles affected by PTC mandate'. http://bit.ly/hYdZxZ

[10] Frailey, Fred (2011-03-03) Trains.com 'Rail association, FRA back off from legal confrontation'. http://bit.ly/jq7lZ4

[11] FRA 'PTC Document Submissions'. http://1.usa.gov/k7Z4tc

[12] Petit, William (2009-10-20) 'Interoperable Positive Train Control (PTC)', AREMA 2009 Annual Conference Communications and Signals Track. http://bit.ly/jvDp9s

[13] PTC-220, LLC

[14] Kemp, Ed (2011-02-23) 'PTC and Wireless Interoperability', PTC World Congress

[15] RailResource (2010-11-10) 'Freights, Amtrak Share DOT Train-Control Grants'. http://bit.ly/jAZXb2

[16] Union Pacific (2010-06-23) 'PTC – Union Pacific's VEMTA Signal Implementation Strategy'.

[17] FRA (2009-02-20) 'Positive Train Control Overview' http://1.usa.gov/irb7tZ

[18] Alstom (2011-02-23) 'ACSES Case Study', PTC World Congress

[19] Progressive Railroading (April 2011) 'Onboard PTC technology'. http://bit.ly/etqWx1

[20] RailResource (2011-03-23) http://bit.ly/hgQBJD

[21] Progressive Railroading (February 2012) http://bit.ly/K85CDJ

[22] Meyers, Warren, APTA (2010) 'Considerations for the Deployment of Communications for Commuter Railroad PTC Systems'.

[23] Skybridge Spectrum Foundation (December 2010) http://scr.bi/iLaJsR

[24] Baker, Jim (2011-03-16) Mass Transit Magazine, 'Positive Train Control On Track for 2015'. http://bit.ly/hYGg84

[25] GE MDS http://bit.ly/l33EmC

[26] US Patent Application 20110075641 http://bit.ly/lMN3FV

[27] GE Transportation http://bit.ly/mtBLJv

[28] Railroad Research Foundation http://bit.ly/jiJyLK

[29] GE Transportation > LOCOCOMM http://bit.ly/lqXbCz

[30] GE Transportation > Vital Logic Controller http://bit.ly/lCP0SU

[31] GE MDS > SD Series IP/Ethernet Radios http://bit.ly/l33EmC

[32] Parvus (2008-01-29) 'Parvus Mobile 802.11 Hotspot Enables Wi-Fi Trial for MBTA Passengers'. http://bit.ly/lYIh9E

[33] Parvus (2008-02-07) 'Parvus Equips Wasatch Front UTA Commuter Buses with Mobile Broadband Internet'. http://bit.ly/j0BrAK

[34] Eurotech (201-03-28) 'Eurotech SpA to Supply Meteorcomm, LLC with ISIS XL Embedded Computers'. http://reut.rs/ipNDaU

[35] Eurotech > ISIS XL PC/104+ Module http://bit.ly/jYfSTo

[36] Alsto Signaling North America http://bit.ly/mlm0L1

[37] Alstom (2011-02-08) 'Amtrak Introduces Alstom PTC Wayside Interface Unit along Northeast Corridor' http://bit.ly/ke5CEr

[38] Railway Gazette (2011-01-26) 'Ansaldo STS wins cab signalling contracts'. http://bit.ly/f3ywgo

[39] ARINC (2011-02-15) 'ARINC Will Deliver Three Major Subsystems for Nation's First Positive Train Control on a Commuter Railroad'. http://bit.ly/dHLIe4

[40] BNET (June 2009) 'Safetran rolls out vital PTC'. http://bit.ly/lqptZS

[41] Progressive Railroad (October 2007) 'Positive train control in transition'. http://bit.ly/kVVnsR

[42] Lockheed Martin http://bit.ly/kNG5re

[43] Parsons (2010-10-26) 'Parsons Selected for Metrolink Positive Train Control System Contract'. http://bit.ly/iVT8E9

[44] The Journal of Commerce (2010-03-15) 'Wabtec Buys Train Signals Firm Xorail'. http://bit.ly/mGp3qD