UNITED STATES PATENT AND TRADEMARK OFFICE

BEFORE THE PATENT TRIAL AND APPEAL BOARD

VIKING DRILL & TOOL, INC.,

Petitioner,

v.

HONGJIA WANG,

Patent Owner.

Case IPR2023-00473

Patent 11,007,583

PATENT OWNER'S NOTICE OF APPEAL

Pursuant to 24 U.S.C. §§ 141(c), 142, and 319, and 37 C.F.R. § 90.2(a), Patent Owner Hongjia Wang ("Patent Owner") hereby provides notice of appeal to the United States Court of Appeals for the Federal Circuit from the Final Written Decision of the Patent Trial and Appeal Board ("Board") entered on July 5, 2024 (Paper No. 82) and from all underlying orders, decisions, rulings and opinions related to the *inter partes* review of U.S. Patent No. 11,007,583 ("'583 Patent") in Case No. IPR2023-00473. This Notice is timely under 37 C.F.R. § 90.3(a)(1), having been filed no later than sixty-three (63) days after issuance of the Final Written Decision.

In accordance with 37 C.F.R. § 90.2(a)(3)(ii), Patent Owner states that the issues on appeal include, but are not limited to:

- The Board's determination that U.S. Publication No. 2018/0133808A1 ("Wang") constitutes prior art to the '583 Patent;
- The Board's determinations that claims 1, 2, 5, 7, 8, 12-15, 18, 19, and 22 of the '583 Patent are rendered obvious under 35 U.S.C. § 103 by *Wang* in view of U.S. Patent No. 8,029,215 ("Gentry") and U.S. Patent No. 10,058,929 ("Durfee");
- The Board's determinations that claims 1, 2, 5, 7, 8, 12, 14, 15, and 19 of the '583 Patent are rendered obvious under 35 U.S.C. § 103 by U.S.

Patent No. 2,193,186 ("Bannister") in view of CN Patent No. 203356678 ("Zhou") and U.S. Publication No. 2,276,532 ("Welty");

- The Board's determinations that claims 13, 18, and 22 of the '583 Patent are rendered obvious under 35 U.S.C. § 103 by Bannister in view of Zhou, Welty, and U.S. Patent No. 4,582,458 ("Korb");
- The Board's factual findings, conclusions of law, or other determinations supporting or related to the foregoing issues; and
- All other issues decided adversely to Patent Owner in any orders, decisions, rulings, or opinions underlying or supporting the Final Written Decision.

A copy of the Final Written Decision is attached to this Notice.

Pursuant to 35 U.S.C. § 142 and 37 C.F.R. § 90.2(a)(1), this Notice is being filed with the Director of the United States Patent and Trademark Office, and a copy of this Notice is being concurrently filed with the Board. In addition, a copy of this Notice and the required docketing fees are being filed with the Clerk's Office for the United States Court of Appeals for the Federal Circuit via CM/ECF in accordance with 37 C.F.R. § 90.2(a)(2), Federal Rule of Appellate Procedure 15, and Federal Circuit Rule 15.

Dated: September 6, 2024 Respectfully submitted,

/s/Kelly W. Cunningham/

Kelly W. Cunningham (Lead Counsel)
Reg. No. 43,750
Ervin Cohen & Jessup LLP
9401 Wilshire Blvd., 12th Floor
Beverly Hills, CA 90212
Tel: (310) 273-6333
Fax: (310) 859-2325
kcunningham@ecjlaw.com

Dated: September 6, 2024 */s/Aaron P. McGushion/*

Aaron P. McGushion, Reg. No. 53,300
McGushion Patent
4565 Dogwood Ave
Seal Beach, CA 90740
(562) 598-6418
aaron@mcgushion.com

Attorneys for Patent Owner

CERTIFICATION OF SERVICE AND FILING

I hereby certify that on September 6, 2024, in addition to being filed and served electronically through the Patent Trial and Appeal Board's P-TACTS System, this **PATENT OWNER'S NOTICE OF APPEAL** was filed with and served on the Director of the United States Patent and Trademark Office by hand delivery at the following address:

Director of the United States Patent and Trademark Office
c/o Office of the General Counsel
United States Patent and Trademark Office
Madison Building East, Room 10B20
600 Dulany Street
Alexandria, VA 22314

I also hereby certify that on September 6, 2024, this **PATENT OWNER'S NOTICE OF APPEAL** and the requisite docketing fees were filed with the Clerk's Office of the United States Court of Appeals for the Federal Circuit via CM/ECF.

I further hereby certify that on September 6, 2024, this **PATENT OWNER'S NOTICE OF APPEAL** was served by electronic mail on the following counsel for Petitioner:

J. Derek Vandenburgh
Iain A. McIntyre
Mitchell R. Williams
Saukshmya Trichi
Katherine Chen
Carlson, Caspers, Vandenburgh & Lindquist, P.A.

225 South Sixth Street, Suite 4200
Minneapolis, MN 55402
Telephone: (612) 436-9600
Facsimile: (612) 436-9650
dvandenburgh@carlsoncaspers.com
imcintyre@cralsoncaspers.com
mwilliams@carlsoncaspers.com
strichi@carlsoncaspers.com
kchen@carlsoncaspers.com

/Kelly W. Cunningham/
Kelly W. Cunningham (Lead Counsel)

Trials@uspto.gov
571-272-7822

Paper 82
Entered: July 5, 2024

UNITED STATES PATENT AND TRADEMARK OFFICE

BEFORE THE PATENT TRIAL AND APPEAL BOARD

VIKING DRILL & TOOL, INC.,
Petitioner,

v.

HONGJIA WANG,
Patent Owner.

IPR2023-00473
Patent 11,007,583 B2

Before WILLIAM V. SAINDON, JAMES J. MAYBERRY, and CYNTHIA L. MURPHY, *Administrative Patent Judges*.

SAINDON, *Administrative Patent Judge*.

JUDGMENT
Final Written Decision
Determining All Challenged Claims Unpatentable
35 U.S.C. § 318(a)

Granting-in-Part Petitioner's Motion to Exclude
37 C.F.R. § 42.64(c)

I. INTRODUCTION

A. Background and Summary

Viking Drill & Tool, Inc. ("Petitioner") filed a Petition (Paper 2, "Pet.") requesting *inter partes* review of claims 1, 2, 5, 7, 8, 12–15, 18, 19, and 22 of U.S. Patent No. 11,007,583 (Ex. 1001, "the '583 patent")[1]. Counsel for the listed inventor of the '583 patent, Hongjia Wang ("Patent Owner"), filed a Preliminary Response. Paper 9 ("Prelim. Resp.").[2] We instituted an *inter partes* review on July 10, 2024. Paper 13 ("Dec. on Inst.").

During the *inter partes* review, Patent Owner filed a Response (Paper 28, "Resp."), Petitioner filed a Reply (Paper 42), and Patent Owner filed a Sur-reply (Paper 54) and an addendum to its Sur-reply (Paper 68, "Sur-reply Add'm").[3] An oral hearing was held. Paper 80 ("Tr."); Paper 81 (confidential portion of transcript).

Petitioner filed a motion to strike (Paper 37) certain exhibits filed with the Response, to which Patent Owner filed an opposition (Paper 39). We granted the motion to strike. Paper 41.[4] We also issued an order sanctioning

---

[1] The '583 patent comprises the originally-issued U.S. Patent No. 11,007,583 B2 as well as U.S. Pat. No. 11,007,583 C1, an *ex parte* reexamination certificate confirming the patentability of original claims 1–14 and adding claims 15–22. Ex. 1001, pp. 16–17.

[2] Paper 9 is a Corrected Preliminary Response, correcting some informalities in the originally submitted Preliminary Response (Paper 7).

[3] A redacted, publicly-available copy of the Reply and Sur-reply can be found in Papers 43 and 55, respectively.

[4] We struck Exhibits 2050, 2053, 2054, and paragraphs 108–120 of Exhibit 2034.

Patent Owner's counsel for, among other things, attempting to make substantive changes under the guise of addressing clerical errors. Paper 47.

Petitioner also filed a motion to exclude (Paper 59, "Mot. Excl."), to which Patent Owner filed an opposition (Paper 61, "Opp. Mot. Excl.") and Petitioner filed a reply (Paper 78, "Reply Mot. Excl.")[5]. For the reasons explained below, we grant-in-part Petitioner's motion to exclude.

We have authority to enter this final written decision under 35 U.S.C. § 318(a). The standard for review is set forth in 35 U.S.C. § 316(e), which provides that "the petitioner shall have the burden of proving a proposition of unpatentability by a preponderance of the evidence." For the reasons provided below, we determine that Petitioner has met this burden of establishing unpatentability of all challenged claims.

B. Real Parties in Interest

Patent Owner identifies Hongjia Wang as real party in interest. *See* Paper 5, 1 (Patent Owner's Mandatory Notice); Paper 11 (updated Notice). Petitioner identifies Viking Drill & Tool, Inc., a/k/a Consolidated Toledo Drill, as real party in interest. Pet. 5.

C. Related Matters

The '583 patent has been asserted against Petitioner in *Tsteigen, Inc. d/b/a/ Tec-Spiral; Hongjia Wang v. Viking Drill & Tool, Inc. d/b/a Consolidated Toledo Drill*, No. 21-cv-002759 (D. Minn.). *See* Paper 5, 1; Pet. 5. The '583 patent is also the subject of IPR2023-00474, filed by Petitioner and decided concurrently with this Decision.

---

[5] A redacted, publicly-available copy of this reply can be found in Paper 79.

D. Prior Art and Asserted Grounds

Petitioner's grounds rely on the following prior art references:

Name	Reference	Exhibit No.
Bannister	US 2,193,186, iss. Mar. 12, 1940	1006
Welty	US 2,276,532, iss. Mar. 17, 1942	1008
Korb	US 4,582,458, iss. Apr. 15, 1986	1012
Gentry	US 8,029,215 B2, iss. Oct. 4, 2011	1010
Durfee	US 10,058,929 B2, iss. Aug. 28, 2018	1011
Zhou	CN 203356678 U, iss. Dec. 25, 2013	1007
Wang	US 2018/0133808 A1, pub. May 17, 2018	1009

Petitioner asserts that claims 1, 2, 5, 7, 8, 12–15, 18, 19, and 22 would have been unpatentable on the following grounds:

Claim(s) Challenged	35 U.S.C. §	Reference(s)/Basis
1, 2, 5, 7, 8, 12–15, 18, 19	103	Wang, Gentry, Durfee
1, 2, 5, 7, 8, 12, 14, 15, 19	103	Bannister, Zhou, Welty
13, 18, 22	103	Bannister, Zhou, Welty, Korb

E. Technical Background and Overview of the '583 Patent

The '583 patent is directed to a drill bit. Before turning to the features of the '583 patent, we provide a brief overview of the field of drill bits. Although drill bits are fairly well known, describing them requires familiarity with several terms of art as well as some geometry. The following serves as a reference for technical and geometric terms used throughout this Decision.

1. Drill Bit Types

There are many types of drill bits, with two types relevant to this proceeding being a *twist drill bit* and a *step drill bit*. According to a textbook definition, twist drill bits are "rotary end-cutting tools having one or more cutting lips and one or more helical or straight flutes for the passage

of chips and the admission of a cutting fluid." Ex. 1017, 21.[6] Below is an image of a typical twist drill bit, from U.S. Patent 38,119 (Ex. 1016):

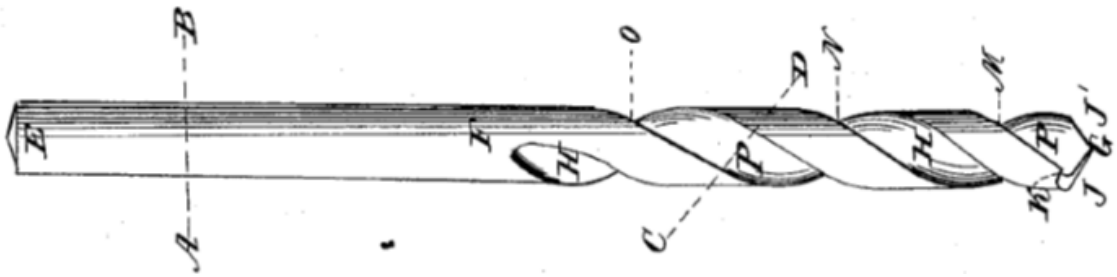

Ex. 1016, Fig. 1. The above figure depicts several features common to twist drill bits. The drill bit is a generally cylindrical rod; on the left side is a smooth shank (E–F) and on the right side are the helical flutes (H, P), with the cutting edges forming a tip (G) on the far right end. Ex. 1016. We will refer to the imaginary line that runs down the rotational center of the drill bit as the *rotational axis*, and a given position along this axis as an *axial position*. We will typically refer to positions measured along this axis as *forward* when they are closer to the tip and *backward* as a position is further from the tip. We will refer to drawings that depict the rotational axis as coplanar to the page (e.g., Ex. 1016, Fig. 1) as a *longitudinal view*.

Figure 5 of Exhibit 1016, reproduced below, shows an image of the drill bit from Figure 1, but looking down the rotational axis:

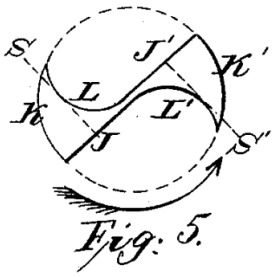

[6] We use Petitioner's added pagination for Exhibit 1017.

Ex. 1016, Fig. 5. This figure illustrates cutting edges J, J' at the tip of the drill bit, with an arrow demarcating that the cutting surfaces rotate counterclockwise in this view. The rotational axis is coming out of the page, such that we are looking down the rotational axis, from the tip. We will refer to this view as an *axial view* (with a presumption that the view is of the tip unless otherwise specified). We will typically refer to positions closer to the rotational axis as *inward* and positions further from the rotational axis as *outward*.

The textbook in Exhibit 1017 further explains that a step drill bit is a type of twist drill bit, having along its length portions of different radiuses. Ex. 1017, 25. An example is shown in Figure 9-17 of Exhibit 1017, a portion of which is reproduced below:

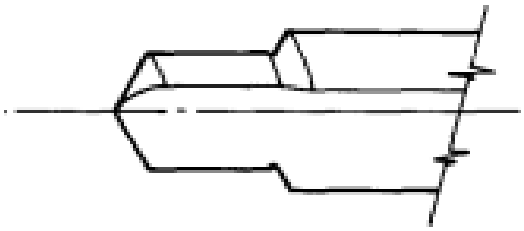

Step construction

Figure 9-17 shows longitudinal view of a step drill having two different radiuses along its length. Ex. 1017, 45. Each step is separated by an angular cutting edge; Figure 9-17 shows two such steps. The different radiuses allow a step drill bit to cut to close tolerances, because the smaller steps act as a pilot for the larger steps, tending to center the bit. *Id.* at 25. We will refer to the distance of a given surface from the rotational axis to be a *radial position*, with its distance from the surface equal to the radius of a circle having an origin on the rotational axis.

Some step drill bits are specifically designed for cutting holes in materials such as sheet-metal panels, wherein different diameters are provided so that a single bit can be used to cut different-size holes (i.e., instead of having to swap in progressively larger fixed-size drill bits to make a large hole). *See, e.g.*, Ex. 1010, 1:16–23. Figure 1 of Exhibit 1010 depicts such a step drill:

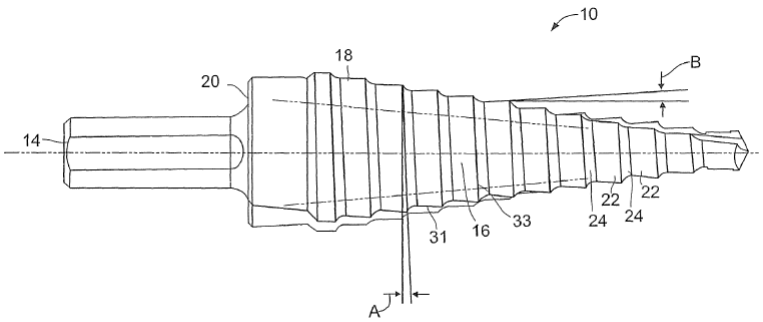

FIG. 1

Figure 1 of Exhibit 1010 depicts a longitudinal view of a step drill bit.

These are just two types of drill bits; many more exist for different cutting tasks. *See, e.g.*, Ex. 1017, 23–25 (discussing different types of twist drill bits), 55 (flat and half-round drills), 58 (spade drills), 70–71 (trepanning drills).

2. *Drill Bit Features*

Drill bits are rotary end-cutting tools having one or more cutting lips, one or more flutes for the passage of chips and cutting fluid, and a shank that is driven by a device that imparts the rotational force. Ex. 1017, 21–22. The cutting lips are rotated and remove the material from the work piece, which breaks off into chips that are carried away by the flute. *Id.* Figure 9-15, reproduced in part below, depicts these and other features:

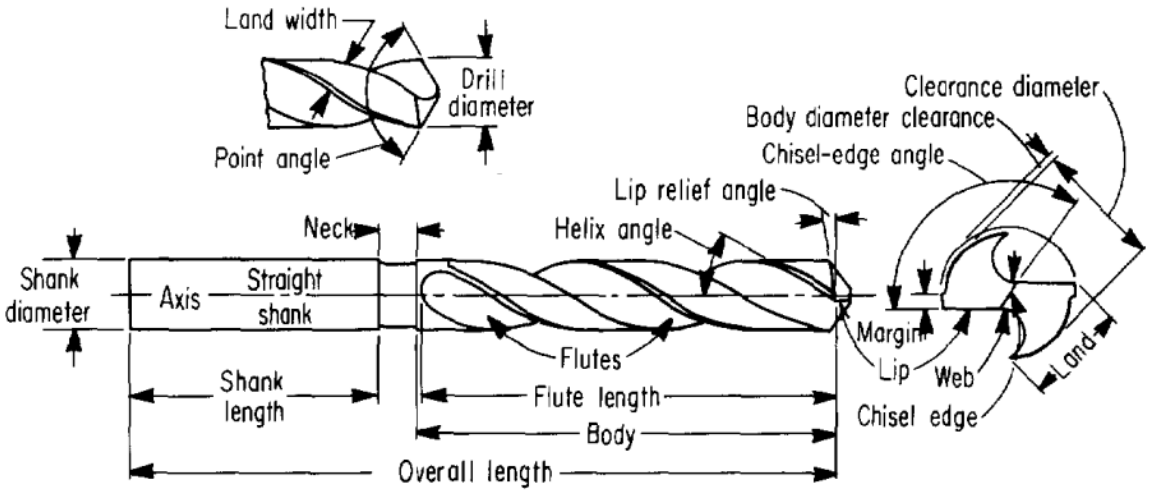

Ex. 1017, 22 (modified to remove non-relevant examples and for size); *see also id.* at 21–22 (providing a definition of the labeled parts in Figure 9-15). A drill designer will vary relative sizes and orientations of these components to suit the needs of the cutting task. *See id.* at 47–52. Because the drill point forms the main cutting surface, attention is focused here. For example, a hole of a certain diameter is created by making the cutting lips extend out to that diameter. *See id.* at 21. The axial view of the drill bit in Figure 9-15 shows that the lips, as one moves along the circumference, are separated by the lands and the flute, the lands being the structural portion of the bit behind, or trailing, the lip during rotation. *Id.* As shown, there are two lips, two lands, and two flutes, with the flutes being what separates each lip/land pair. The lips are shown as symmetrical, i.e., they are spaced approximately 180° from one another. *See also, e.g.*, Ex. 1011, 9:45–47 ("symmetrical step drill bits provide two cutting edges spaced 180 degrees from one another"). Symmetry of the cutting lips ensures that the opposed cutting lips drill bit enter the work at the same position, preventing wobble. *Accord* IPR2023-00474, Paper 30 at 1 (Patent Owner arguing in a related case that *non*-symmetric cutting lips "produces a wobble"). We note that the land trails, or

follows, the cutting lip as the drill bit is rotated—that is, in the axial view of Figure 9-15, the bit would spin counterclockwise. *See also, e.g.*, Ex. 1011, 8:5–8 ("a leading edge is an edge that is toward the front of the rotating step drill bit 1 and a trailing edge is an edge toward the rear of the rotating step drill bit 1"). We also note that the cutting lips may also be referred to as cutting edges. *See, e.g.*, Ex. 1010, 1:37–40 ("Each of the cutting surfaces 22 is generally cylindrically-shaped and has a lip or cutting edge 31.").

a) Radial Relief

The lands are often recessed from the lips after some distance, or margin, so that they do not rub against the hole. Ex. 1017, 21; *see also id.* at 22, Fig. 9-15 (depicting this arrangement of the lip, margin, and lands); *but see* Ex. 1011, 9:59 *et seq.* (deliberately providing a rubbing surface in order to stabilize the bit). This is labeled in Figure 9-15 as "body-diameter clearance." Ex. 1017, 22. The radius of a circle defined by the lands is smaller than the radius of a circle defined by the cutting lip, which is also known in the art as *radial relief*. Ex. 1010, 2:13–16 ("Thus, the radial relief C is provided by the difference in the radius of the cutting surface proximate the cutting edge 31 and the radius of the cutting surface proximate trailing edge 32."); Ex. 1011, 10:4–11 ("With a positive radial relief the radius of each step section 10, 11 can be gradually reduced from the cutting edge 18a, 20a toward the trailing edge of the step section to provide a space S between the peripheral surface 21 of the step sections and the side wall of the hole being cut"); Ex. 1004 ¶ 55 ("relief in a radial direction measured in the plane of rotation"). Radial relief helps the drill bit resist binding on the sides of the hole in the workpiece. Ex. 1010, 2:16–18 ("radial relief C eases the

rotation of the step drill bit 10 within the workpiece"). Figure 3 of Exhibit 1011 is reproduced below:

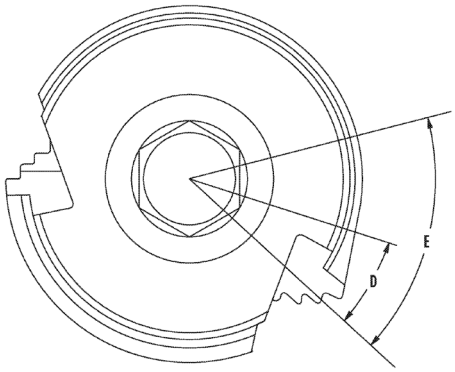

FIG. 3

Ex. 1011, Fig. 3. Figure 3 is an axial end view of a step drill bit, looking up its axis from the shank. *Id.* at 1:51–52. The cutting edge can be seen in the 4 o'clock position, wherein the cutting edge is located radially outward along a distance D compared to the ends of the edge, providing radial relief. *Id.* at 11:54–59. In sum, *radial relief* is where the radius of some portion of the non-cutting surface is smaller than the radius of the cutting surface. *Accord* Ex. 1004 ¶¶ 55–56.

b) Axial Relief

The cutting lips at the tip of the drill bit are angled relative to the rotational axis of the drill bit, forming a cone-shaped point. Ex. 1017, 21. The angle is not necessarily constant, however, and may trail off. *Id.* at 21, 50. That is, the location of the interface between the cutting lip and the workpiece along the axis of the drill bit moves distally. This is depicted in Figure 9-15 as a "lip relief angle," and is also known as axial relief. *Id.* at 21, 22. Axial relief provides clearance between the cutting surface and the workpiece, and it is known in the art to vary the amount of relief based on the application. *Id.* at 50 ("With inadequate lip relief, a drill will not cut

freely; excessive relief will shorten the drill life." . . . "Higher relief angles generally provide best results with light feeds and low-strength, nonferrous materials." . . . "[R]educed relief angles provide cutting edges with additional support to withstand the higher cutting loads"); Ex. 1010, 1:52–63; Ex. 1011, 12:1–2 ("extending the axial relief for a relatively long distance provides a faster cutting bit"); Ex. 1004 ¶ 54. Figure 1 in Exhibit 1010 is reproduced below:

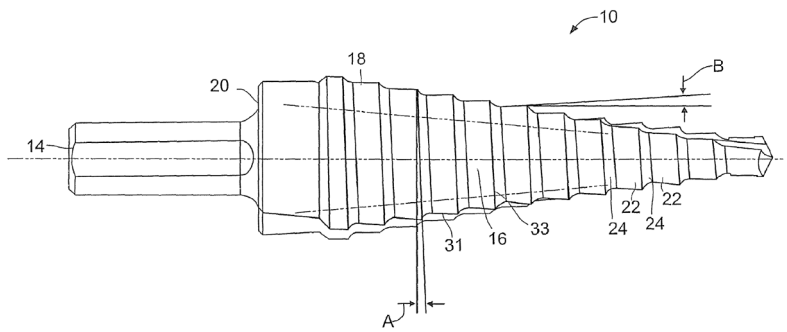

Ex. 1010, Fig. 1. Axial relief (A) of a step drill bit is marked on the cutting surface. The leading edge of the cutting surface is located axially forward of a trailing edge of the cutting surface. In sum, *axial relief* is where a portion of the cutting surface is axially forward from a trailing portion of the cutting surface. *Accord* Ex. 1004 ¶¶ 51–54.

3. *Geometry Useful in Describing Drill Bits*

This Decision discusses different shapes such as a spiral, cone, and cylinder. Envisioning and describing these three-dimensional objects by themselves is relatively simple. Both cones and cylinders have a radius *r* and a height *h*, with the walls of the cone converging at an apex (or, perhaps, the walls of the cylinder being a cone with parallel walls, i.e., converging at infinity). A three-dimensional spiral is a curve that turns around an axis as it moves down that axis. As relevant to this Decision, the spiral can be

wrapped on the surface of a cone or a cylinder. When wrapped around a cone, the spiral moves radially away from the rotational axis as it spins down, whereas when wrapped around a cylinder the spiral stays at a constant radius as it spins down the rotational axis. The amount a spiral turns per unit of distance down the rotational axis can be defined by an angle relative to the rotational axis, called the helix angle. *See, e.g.*, Ex. 1017, 21 (defining helix angle); Ex. 1001, 2:25–26 ("helix angle ω_0 is an angle of the spiral lines and an axis"); Ex. 1011, 1:34–36 ("[i]n . . . conventional step drill bits, the flute has a constant angular helical pattern about the longitudinal [(rotational)] axis of the . . . bit"); Ex. 1012, 2:41–44 ("The flutes may be cut helically about the drill or longitudinally at a fixed angle to the drill axis from about 0 to 15 degrees."). When looking down the rotational axis, i.e., in the radial view, an object moving along a spiral path appears to spin around the rotational axis.

We next turn to how to describe the position of various locations on a cone, cylinder, or a spiral wrapped around either. As introduced earlier in this section, we will refer to the position of a location along the rotational axis as an axial location, generally relative to one of the endpoints of the shape. We will refer to the position of a location outward from the rotational axis as a radial location, generally described by the radius of a circle originating at the axis and passing through the location. Next, for a given axial location and radial location, we are left with a circle of possible locations, requiring us to define where along that circle we are describing. This we will call the angular position, relative to a chosen zero point. Relative to that zero position, a location can then be a described a certain number of degrees (0–360°) or radians (0–2π) from the zero position. These

three coordinates (axial, radial, angular) allow us to precisely define any location on a cone or cylinder (or a combination thereof).

We wish to make one further point on geometry. Imagine a simplified, transparent drill bit consisting of a cone and a cylinder portion, having drawn on it a spiral path proceeding down the exterior surfaces of this bit from the tip to the shaft at a constant helical angle relative to the rotational axis. Imagine an ant walking along the spiral path. If one views the ant's path while looking down the rotational axis of the bit (i.e., the radial view), the ant would be observed to walk in circles, like the Earth orbiting the Sun. When on the conical portion, the ant would steadily increase its radial distance from the axis, whereas when on the cylindrical portion the ant would remain at a constant radius. When viewing the ant in the longitudinal view, the ant's path appears sinusoidal; like if it were walking up and down hills. Interestingly, given that the helix angle is constant as it moves down the rotational axis, from the perspective of the ant, *it is walking in a straight line*. That is, the curve defining the spiral is a straight line on this topography on which it lies. It only appears sinusoidal in a longitudinal view or circular in an axial view because those views are two-dimensional. This is similar to the effect of mapping on a two-dimensional piece of paper the path of an airplane flying in a straight line over a three-dimensional sphere (Earth)—the line appears curved on a two-dimensional flat plane even though it is straight on a three-dimensional sphere. Thus, while reviewing the figures of the '583 patent and the prior art, we encourage the reader to keep in mind the distortive limitations of two-dimensional representations of three-dimensional objects.

4. The '583 Patent

The abstract of the '583 patent characterizes the disclosed invention as follows:

> The present invention provides a twist drill. A cone portion is provided at a front end of the operating portion, and an exterior surface of the operating portion is provided with a spiral flute for shunting cutting chips. The exterior surface of the cone portion is provided with a plurality of composite cutting blade groups which are sequentially enlarged in diameter from the front end to the rear end of the cone portion. The cone portion is provided with a top blade on the tip. In use, the top blade is used for positioning, and the cutting process is carried out by the top blade and the composite cutting blade groups.

Ex. 1001, code (57).

The '583 patent describes a twist drill bit having a cone portion at the tip of the bit that is configured like step drill bit. Figure 3, reproduced below, is illustrative:

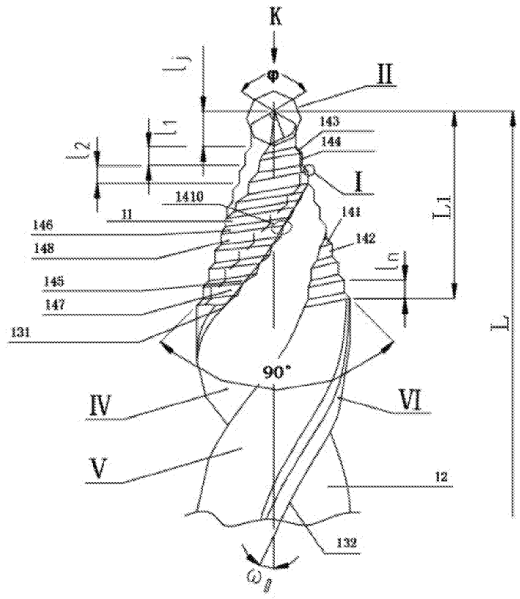

FIG. 3

Ex. 1001, Fig. 3. Figure 3 of the '583 patent depicts a cone portion (L1) at the end of a cylindrical portion of a twist drill bit. The cone portion is formed by a series of first and second step surfaces (141, 142) defining a conical surface and a cylindrical surface, respectively. Ex. 1001, 5:9–29. A cutting edge (1410) is located where those surfaces intersect a spiral flute (IV). *Id.*

F. Challenged Claims

Claims 1, 2, 5, 7, 8, 12–15, 18, 19, and 22 are challenged. Claims 1 and 8 are independent. Claim 1 is reproduced below.

> 1. A twist drill, comprising:
>
> an operation portion comprising a cone portion and a cylinder portion axially fixed to the cone portion;
>
> a shank portion axially fixed to the cylinder portion opposite the cone portion;
>
> a spiral flute formed on an exterior surface of the operating portion extending from a front end of the cone portion and at least partway up the cylinder portion, the spiral flute having a sidewall;
>
> a plurality of composite cutting blade groups formed sequentially and spirally on a cone portion exterior from a front end of the cone portion to a rear end of the cone portion, each of the plurality of composite cutting blade groups comprising:
>
> > a conical first step surface;
> >
> > a cylindrical second step surface adjacent to the conical first step surface,
> >
> > a major cutting edge defined by the intersection of the conical first step surface and the sidewall of the spiral flute;

> a minor cutting edge defined by the intersection of the cylindrical second step and the and the [sic] sidewall of the spiral flute; and
>
> a cutting tip defined by the intersection of the major cutting edge, the minor cutting edge, and the sidewall of the spiral flute; and
>
> a top blade provided on the front end of the cone portion;
>
> wherein a diameter of each of the plurality of composite cutting blade groups increases sequentially from the front end of the cone portion to the rear end of the cone portion; and each of the plurality of composite cutting blade groups is configured to crush cutting chips into finer chips and the spiral flute is configured to shunt the finer chips; and
>
> wherein at least one cylindrical second step surface is immediately adjacent to a conical first step surface of a next composite cutting blade group; and the diameter of the last composite cutting blade group located at the rear end of the cone portion immediately adjacent to the cylinder portion is equal to the cylinder portion diameter.

Ex. 1001, 10:2–43.

Claim 8 differs from claim 1 by further reciting "the minor cutting edge being configured to smooth the machined surface of the workpiece to improve surface quality" and "the top blade comprises a chisel edge, two auxiliary cutting edges and two straight major cutting edges, the auxiliary cutting edge is respectively intersected with the straight major cutting edge and the chisel edge." *Id.* at 11:18–20, 11:25–28.

II. PATENTABILITY ANALYSIS

A. Burdens of Proof

"In an IPR, the petitioner has the burden from the onset to show with particularity why the patent it challenges is unpatentable." *Harmonic Inc. v.*

Avid Tech., Inc., 815 F.3d 1356, 1363 (Fed. Cir. 2016) (citing 35 U.S.C. § 312(a)(3) (requiring *inter partes* review petitions to identify "with particularity . . . the evidence that supports the grounds for the challenge to each claim")); *Dynamic Drinkware, LLC v. Nat'l Graphics, Inc.*, 800 F.3d 1375, 1378 (Fed. Cir. 2015) (discussing the burden of proof in *inter partes* review).

Although the burden of proof for showing unpatentability remains on a petitioner, the patent owner may have a burden of production. For example, a patent owner has the burden for showing it is entitled to priority. *Dynamic Drinkware*, 800 F.3d at 1379 (discussing *Tech. Licensing Corp. v. Videotek, Inc.*, 545 F.3d 1316, 1326–27 (Fed. Cir. 2008)); *see also In re Magnum Oil Tools Int'l, Ltd.*, 829 F.3d 1364, 1376 (Fed. Cir. 2016) ("[A] patentee bears the burden of establishing that its claimed invention is entitled to an earlier priority date than an asserted prior art reference.").

B. Level of Ordinary Skill in the Art

Petitioner asserts the following level of ordinary skill in the art:

> A [person of ordinary skill in the art (POSA)] with respect to the '583 patent would have been an individual educated in mechanical engineering with a bachelor's degree and at least one or two years of experience in the development of drill bits, or an associate's degree and at least five years of experience in the development of drill bits. A POSA would typically work in a team with machinists and would be aware of developments in the field of machine tools, particularly drill bits, for example by attending trade shows, and by reading patents and trade journals.

Pet. 25; *see also* Ex. 1004 ¶ 14.

Patent Owner does not appear to challenge this proposed level of skill or offer its own. We adopt Petitioner's definition for purposes of this Decision, which appears consistent with the '583 patent and prior art.

C. Claim Construction

We apply the claim construction standard set forth in *Phillips v. AWH Corp.*, 415 F.3d 1303, 1312–13 (Fed. Cir. 2005) (en banc). 37 C.F.R. § 42.100(b). That is, "the words of a claim 'are generally given their ordinary and customary meaning.'" *Phillips*, 415 F.3d at 1312. "[T]he ordinary and customary meaning of a claim term is the meaning that the term would have to a person of ordinary skill in the art in question at the time of the invention." *Id.* at 1313. In addition, we must also "consider the patent's prosecution history." *Id.* at 1317.

1. "Cutting Blade Groups Formed . . . Spirally"

Claims 1 and 8 state that the "composite cutting blade groups" are "formed sequentially and spirally on a cone portion exterior" of the twist drill. The phrase "formed . . . spirally" (shortened hereinafter to "formed spirally") is central to several of the parties' arguments.

Petitioner proposes that "formed spirally" means that the cutting blade groups are provided with axial relief. Pet. 23. Petitioner begins by asserting that the words "spiral" and "spirally" are used throughout the specification of the '583 patent, "but only to describe different features unrelated to this claim limitation." *Id.* at 20. Petitioner argues that guidance on how to construe "formed spirally" can be found in the prosecution history of the reexamination, "where Patent Owner successfully relied on this claim limitation to overcome rejections based on the Sheldon and Zhou references." *Id.* (referring to Exs. 1014 (Sheldon), 1007 (Zhou)). In particular, Petitioner points out how Patent Owner distinguished the claims from these prior art references by arguing that the cutting surfaces in those references "do not spiral, but rather are perpendicular or orthogonal with

respect to the center line axis of rotation of the drill." *Id.* at 21 (citing Ex. 1003, 509–513). Petitioner also points out how Patent Owner construes the claims in the related district court litigation, where Patent Owner asserts that spirally formed cutting blade groups are shown in Petitioner's accused products because they are "formed 'spirally' in that they are more slanted than any conventional step drill." *Id.* at 22 (citing Ex. 1022, 7–8). Petitioner asserts that Patent Owner's discussion of a "slant" is an argument that the cutting surfaces are not perpendicular to the rotational axis of the drill bit (as Patent Owner argued in the reexamination). *Id.* at 22–23. Petitioner asserts that the "formed spirally" limitation is covered by axial relief. *Id.* at 23.

Patent Owner acknowledges that Petitioner "construes this 'spirally' limitation in this context to mean that the cutting blades are not perpendicular to the drill bit's rotational axis, but rather have a 'slant' creating axial relief behind the cutting edges." Resp. 9. Patent Owner states that it "agrees with this construction in this context." *Id.*; *see also* Tr. 77:9–12 (Patent Owner's counsel stating that "spirally means axial relief").

In view of the above, the parties have agreed to construe the cutting blade groups being "formed spirally" as meaning that the cutting blade groups are slanted with respect to the rotational axis, i.e., are not perpendicular to the rotational axis. The parties have agreed that being "formed spirally" is met by axial relief. Pet. 23; Resp. 9. We are not bound by a claim construction agreed to by the parties, but in this case, we construe the claim in the manner requested by the parties. *See, e.g.*, *WesternGeco LLC v. ION Geophysical Corp.*, 889 F.3d 1308, 1328 (Fed. Cir. 2018) ("[T]he Board is not bound to adopt either party's preferred articulated construction of a disputed claim term."). In particular, we construe the

limitation requiring the cutting blade groups to be "formed spirally" to mean that the trailing surfaces of the cutting blade groups are not perpendicular to the rotational axis of the drill bit. This limitation can also be described as requiring "slanted" cutting blade groups, or as requiring that the cutting blade groups are provided with axial relief. The parties appear to use these three descriptions interchangeably, and we do the same, with a preference to the technical term, axial relief. *See, e.g.*, Pet. 49 (equating "spirally" with "slant" and "axial relief"); Resp. 9 (same).

2. "Composite Cutting Blade Groups [] Configured to Crush Cutting Chips into Finer Chips"

Independent claims 1 and 8 both recite that "each of the plurality of composite cutting blade groups is configured to crush cutting chips into finer chips." Petitioner asserts that crushing chips "into finer chips" is the natural result of having a plurality of cutting blade groups. Pet. 23–24. Petitioner asserts that Patent Owner asserted such a construction in the related litigation. *Id.* (citing Ex. 1021, 4). Specifically, Patent Owner asserted there that "each cutting blade group is small, relative to the single major cutting edge that the cone portion would have if there were no composite cutting blade groups on the cone portion of the twist drill." Ex. 1021, 4.

Patent Owner does not offer an explicit claim construction. Patent Owner does dispute whether the Bannister reference teaches crushing chips into finer chips, but we are unable to discern any implicit claim construction from the arguments. *See generally* Resp. 24–27.

We turn to the '583 patent's specification for guidance. The '583 patent states that "the composite cutting blade groups are able to crush chips into multiple sections, that is, to crush the removed metal chips to *finer chips*

which are easy to be removed." Ex. 1001, 9:19–22 (emphasis added). Another portion of the specification discusses chip size in terms of the size of an individual composite cutting blade group. *Id.* at 3:5–25. Accordingly, we find that Petitioner's proposed construction is consistent with the specification of the '583 patent. We construe the "finer chips" limitation as reciting a natural consequence of having a plurality of cutting surfaces, relative to having one large cutting surface.

3. Construction of Remaining Terms

We determine that no further terms require construction. *Realtime Data, LLC v. Iancu*, 912 F.3d 1368, 1375 (Fed. Cir. 2019) ("The Board is required to construe 'only those terms . . . that are in controversy, and only to the extent necessary to resolve the controversy.'") (quoting *Vivid Techs., Inc. v. Am. Sci. & Eng'g, Inc.*, 200 F.3d 795, 803 (Fed. Cir. 1999)).

D. Availability of Wang (Ex. 1009) as Prior Art

The '583 patent claims priority to Wang (Ex. 1001, code (63), 1:6–12), but Petitioner disputes that priority claim (Pet. 25–33). "[A] patent application is entitled to the benefit of the filing date of an earlier filed application only if the disclosure of the earlier application provides support for the claims of the later application, as required by 35 U.S.C. § 112." *PowerOasis, Inc. v. T-Mobile USA, Inc.*, 522 F.3d 1299, 1306 (Fed. Cir. 2008). "To satisfy the written description requirement [in § 112,] the disclosure of the prior application must 'convey with reasonable clarity to those skilled in the art that, as of the filing date sought, [the inventor] was in possession *of the invention*.'" *Id.* (alteration in original) (quoting *Vas-Cath Inc. v. Mahurkar*, 935 F.2d 1555, 1563–64 (Fed. Cir. 1991)).

The ’583 patent issued from an application that was a *continuation-in-part* of the application that published as the Wang reference. Ex. 1001, code (63); Ex. 1009, code (21). The application that published as the Wang reference was ultimately abandoned. Ex. 1001, code (63). The issue before us is whether Wang reasonably conveys possession of the “formed spirally” limitation under the parties’ construction. The parties agree that “formed spirally” means that the cutting teeth have axial relief, i.e., that they are formed non-perpendicularly to the rotational axis of the drill bit.

1. Petitioner’s Position on Priority

Petitioner begins its analysis by comparing and contrasting Figure 3 of the ’583 patent with Figure 6 of Wang.[7] Pet. 26–27; Reply 1–2. Petitioner notes that, “[i]n filing the continuation-in-part application that led to the ’583 patent, P[atent] O[wner] omitted multiple figures from Wang showing cutting blade groups perpendicular to the drill axis (including Figure 6 shown below), and added new Figure 3 showing the cutting blade groups slanted relative to the drill axis.” Reply 1. We have reproduced these figures below, modified to remove labeling:

[7] In order to provide better pinpoint citations, we will refer to and cite to Exhibit 1009 (Wang ’900 application publication) instead of Exhibit 1018 (Wang application). The parties generally adopt the same convention. *See, e.g.*, Resp. 10 (discussing the Wang ’900 application and citing to Exhibit 1009); Pet. Reply 2 (similar).

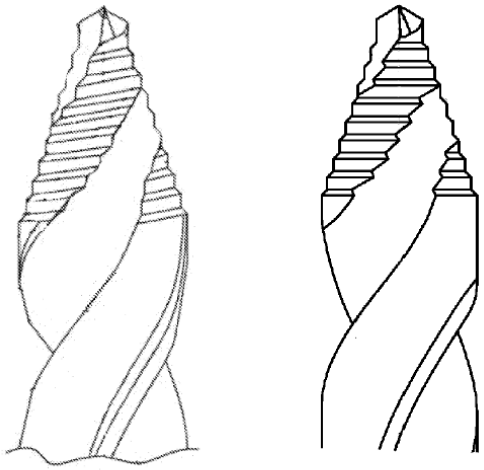

'583 patent, Fig. 3 Wang, Fig. 6

See Ex. 1001, Fig. 3; Ex. 1009, Fig. 6; Pet. 27. A modified version Figure 3 of the '583 patent is reproduced on the left. It shows cutting teeth that appear to be not perpendicular to the rotational axis of the drill bit. Consistent with this depiction, the specification of the '583 patent states that axial relief may be provided. Ex. 1001, 2:46–48; 6:58–61; *see id.* at Fig. 5B (noting the sub-figure depicting normal relief α_n on surface 145 and rake face 133). The cutting teeth are not described as parallel to one another. *See generally id.* A modified version of Figure 6 of Wang is reproduced on the right. It shows cutting teeth that are perpendicular to the rotational axis of the drill bit. Ex. 1009, Fig. 6. Consistent with this depiction, Wang does not use the term "axial relief" in its specification. *See generally id.* Wang also states that the structure that forms the cutting teeth are "distributed in parallel [to each other]." Ex. 1009 ¶¶ 6, 31. In particular, the cutting teeth are formed into the surface of the cone by cutting parallel "flutes." *Id.* ¶¶ 31 ("flutes 4 [are] distributed in parallel"), 32 ("flutes need to be dug in the

flank surface to form the [] main cutting blades").[8] Parallel flutes, and the cutting teeth they form, cannot be non-parallel by definition. Thus, we find that Wang's parallel flutes do not exhibit axial relief under the parties' agreed-upon construction.

2. Patent Owner's Arguments & Our Analysis on Priority

Patent Owner argues that other portions of Wang disclose axial relief. *See generally* Resp. 6–22; Sur-reply 2–10. We address Patent Owner's arguments in turn, noting that the ultimate question put before us is whether Wang "reasonably conveys to those skilled in the art that the inventor [of the '583 patent] had possession of [cutting teeth having axial relief] as of the filing date." *Ariad Pharms., Inc. v. Eli Lilly & Co.*, 598 F.3d 1336, 1351 (Fed. Cir. 2010) (en banc).

a) Axial Relief is Old and Well Known

Patent Owner's first argument is that Wang does not need to explicitly disclose axial relief because it is old and well-known in the art to provide axial relief. Resp. 9 ("[A]xial relief is so ubiquitous and such a conventional element that a POSA would readily infer it or assume it with or without an illustration or a thorough explanation."); Sur-reply 7–8 ("[A] POSA . . .

---

[8] Accordingly, Wang uses the term "flutes" in an unusual manner. They are not the structure used to define the cutting surface and to remove chips, as the term is typically used in the art. *See* Ex. 1017, Fig. 9-15, 21 (defining "flutes" as "grooves cut or formed in the body of the drill to provide cutting lips[and] to permit removal of chips"). In this section II.D on priority, we will use the term "flutes" to discuss the term as used in Wang, i.e., the removed portion of the drill bit that defines the cutting teeth. We will use the term "chip evacuation flute" to discuss what is usually referred to as the "flute" in the art, the long spiral structures used to carry away chips and to define the cutting edge, or rake face, of the drill bit.

would expect to see some sort of provision for axial relief, and would readily infer that Wang was stating that axial relief was a preferred part of the disclosed invention without the need for an illustration or thorough explanation."). Petitioner's first counterargument is that the knowledge of one skilled in the art cannot make up for an absence of disclosure. Reply 2–3 (citing *Lockwood v. Am. Airline, Inc.*, 107 F.3d 1565, 1571–72 (Fed. Cir. 1997) ("Entitlement to a filing date does not extend to subject matter which is not disclosed, but would be obvious over what is expressly disclosed. It extends only to that which is disclosed.")). Petitioner's second counterargument is pointing out that Patent Owner argued in the reexamination that the "formed spirally" limitation was novel and non-obvious over the prior art. Reply 3 (citing Ex. 1003, 481–482, 488–492, 509–511, 526). Petitioner explains that, "[h]aving relied on this limitation to obtain allowance of its claims, [Patent Owner] cannot now argue that the feature is so old and ubiquitous that it didn't even need to be disclosed." *Id.*

We agree with Petitioner's characterization of the law—that the knowledge of a person of ordinary skill in the art cannot make up for the absence of disclosure in an alleged priority document. *Lockwood*, 107 F.3d at 1571–72. Written description requires that something is actually or inherently disclosed. *PowerOasis*, 522 F.3d at 1306–07 ("[T]he written description [must] actually or inherently disclose the claim element"). Patent Owner cites to *Hologic, Inc. v. Smith & Nephew, Inc.*, 884 F.3d 1357, 1362–63 (Fed. Cir. 2018), in support of its view that the knowledge of a person of ordinary skill in the art can make up for the lack of disclosure. *See, e.g.*, Resp. 8, Sur-reply 7. The *Hologic* case involved a discussion of whether the priority document sufficiently disclosed a "light guide" being

"permanently affixed" in a "first channel." *Hologic*, 884 F.3d at 1362. The court noted that the priority document described a "fiber optic bundle," and that it was undisputed that a "'fiber optic bundle' is a type of light guide." *Id.* The court next found that the priority document described a "light channel" or "viewing channel" and that there was substantial evidence supporting the finding that these structures were the claimed "first channel." *Id.* In sum, the *Hologic* case was about matching slightly different language between the claims and the disclosure in the priority document. We do not understand the *Hologic* case to be saying that the knowledge of a person of ordinary skill in the art can be used to make up for the lack of disclosure, nor do we understand it to be providing an exception to *Lockwood*'s requirement for actual disclosure.

As to Petitioner's second point, we are also uneasy with Patent Owner's conflicting representations to the United States Patent Office. Today, Patent Owner is arguing to the Patent Office that a person of ordinary skill in the art would "readily infer [axial relief] or assume it with or without an illustration or a thorough explanation." Resp. 9. Yet, not two years ago, Patent Owner argued to the Patent Office that two separate references did not show the "formed spirally" limitation because their cutting surfaces were perpendicular to the axis of rotation (i.e., did not have axial relief). Ex. 1003, 509 (arguing that, "among other distinctive patent claim limitations, Claim 1 . . . recites that the composite cutting blade groups are 'formed sequentially and ***spirally***'") (emphasis in original), 510 (arguing that a reference was not formed spirally because the cutting surface is "formed perpendicularly"), 513 (arguing that "Zhou teaches forming [cutting surfaces], which . . . are oriented perpendicular to the central axis of

rotation" and that "Zhou also does not disclose composite cutting blade groups that are formed spirally on the cone exterior."). Patent Owner thus secured a patent in the reexamination on the basis that axial relief is ***not*** something a person of ordinary skill in the art would "readily infer [] or assume [] with or without an illustration or a thorough explanation." Patent Owner's representations to the United States Patent Office during reexamination and now in this IPR are irreconcilable. We agree with Petitioner that allowing Patent Owner to secure priority to the Wang reference on this line of reasoning would be unjust. However, we need not impose any particular equitable relief at this time because Patent Owner's argument loses on the merits (as described in the next section).[9]

b) Axial Relief is not Disclosed in Wang

Patent Owner next argues that axial relief is disclosed in Wang. Response 10–22; Sur-reply 3–10. Petitioner disagrees. Reply 3–6. Before turning to the specific language that Patent Owner cites to, we review how Wang describes the cutting blades. As we indicated above, the cutting surfaces are defined by "flutes." Ex. 1009 ¶ 6; *see supra* n.8. The shape of the flutes are such that any given flute defines a first cutting blade and a

---

[9] Furthermore, Patent Owner's representations to the United States Patent Office in the reexamination about the prior art were factually incorrect. Both Sheldon and Zhou describe axial relief; we agree with and adopt as our own Petitioner's expert's analysis on this issue. Ex. 1003 ¶¶ 67–76 (citing, e.g., Ex. 1014, Fig. 1, 3:3–5 (cutting teeth are "ground so as to rise slightly in the circumferential direction"); Ex. 1007, Fig. 1 (noting the cutting edges are not parallel to each other, as denoted by h1–h4 and that the back surface of cutting teeth 2 and 4 are readily visible), ¶¶ 8 (describing "back angle," i.e., axial relief), 14 (describing "asymmetrical edge heights," i.e., the opposing sets of cutting teeth are not parallel to each other)).

second cutting blade. *Id.* ¶ 32 ("[F]lutes need to be dug in the flank surface to form the . . . cutting blades."). The main cutting blades are heavily inclined relative to the axis of rotation (*id.* ¶ 7), whereas the second cutting blades are parallel to the axis of rotation (*id.*), or form an acute angle thereto (*id.* ¶ 8). If one were to follow the flank surfaces of the cutting blades down the axis of rotation, it would form a step-like structure.[10] *Id.* ¶¶ 6, 31; s*ee also, e.g.*, *id.* at Fig. 6 (showing the stepped profile). Wang emphasizes that the flutes are "distributed in parallel" and "are symmetrically arranged." *Id.* ¶¶ 6, 31. Given that the flutes are parallel, then the cutting edges made by the flutes must also be parallel. Given that the flutes are symmetric, then the cutting edges made by flutes on the opposing side must align. *See also* Ex. 1011, 9:45–47 (explaining that "symmetrical" means, in the art, "spaced 180 degrees from one another"). We do not find these disclosures to be suggesting axial relief; quite the contrary. If there were axial relief then the flutes could not be parallel.[11] Parallel flutes are perpendicular to the axis of rotation, and thus we find that they have no axial relief.

---

[10] That is, if our ant from the background section was walking down from the tip of the drill bit along a path parallel to the axis of rotation (i.e., at a fixed angular position), then as the ant was walking along the first cutting surface its radial position would increase quickly, whereas as it walked along the second cutting surface its radial position would generally stay the same.

[11] For example, consider a hypothetical drill bit that is translucent, and the cutting blades are marked by a permanent marker. For the cutting blades on the side facing the observer to be parallel to the blades on the side facing away from the observer, there could be no axial relief. If there were axial relief, then the observer would see the blades on the side facing them to be inclined in one direction, and the blades on the side facing away from them to be inclined in the opposite direction.

Notwithstanding Wang's requirements for parallel flutes, Patent Owner's arguments are based on the following sentence in Wang:

> The flutes of the present disclosure may be arc-shaped flutes adapted to a radian of the flank surface, or the connecting lines of the flutes form a spiral structure.

Ex. 1009 ¶ 35; *see also id.* ¶ 10 ("connecting lines of the flutes form a spiral structure"). Patent Owner would have it that "lines of the flutes" means the lines that separate each flute, and on that basis, Patent Owner argues that Wang is describing an alternative embodiment where the flutes are no longer parallel. *See generally* Resp. 10–18; Sur-reply 3–7. This argument is illustrated in Patent Owner's modified Figure 5 of Wang, reproduced below:

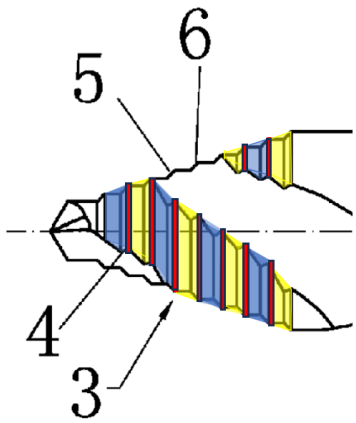

Resp. 12 (reproducing a marked-up, modified version of Exhibit 1009, Figure 5). This figure shows alternating flutes colored in blue and yellow, with a *dividing* line in red between each flute.[12] The red lines, like the flutes, are parallel to each other. Patent Owner asserts that these red lines

[12] Patent Owner mistakenly pairs together the wrong surfaces in its marked-up drawing. The first cutting blades have the high angle relative to the rotational axis, and the second cutting blades have no angle or a low angle. Ex. 1009 ¶¶ 6–8. Patent Owner's markup shows the opposite. We point this out to the extent the coloration is confusing to the reader, but also note that it does not change the point that Patent Owner is making.

dividing the flutes "connect" the flutes because they touch two adjacent flutes. Patent Owner asserts that the lines dividing each flute "are the only structures that the phrase 'connecting lines of the flutes' could plausibly refer to." *Id.* at 13 (citing Ex. 2034 ¶ 34); Ex. 2034 ¶ 34 (same). In its brief, Patent Owner does not directly respond to Petitioner's position, or the analogous one we set out in our Decision on Institution, but rather responds to a strawman argument based on cutting tips. *Compare* Pet. 29 (discussing the "meeting edges of the cutting blade groups") *and* Dec. on Inst. 18 (stating "intersections of the flutes with the cutting surface are depicted as having a spiral shape") *with* Resp. 14–15 (asserting that Petitioner is "referring to the cutting tips of the composite cutting blade groups").

Patent Owner's position is unavailing. One could say that glue can *connect* two pieces of wood, but that is in the sense that it is a fastener providing a structure that physically connects or bonds two separate pieces. Patent Owner's red lines do not denote some sort of structure connecting the various flutes. They only denote borders. They do not even connect the flutes, they merely touch two of them. Instead, we agree with Petitioner, and the position of its expert, that "connecting lines of the flutes" is describing the angular positions of the flutes. *See generally* Reply 3–6; Ex. 1004 ¶¶ 108–109. Specifically, we understand the "connecting lines" of the flutes to be lines that connect them, i.e., lines that connect them together, consistent with other uses of connecting lines in Wang. *See, e.g.*, Ex. 1009 ¶¶ 6 ("connecting lines of the first cutting blades and the second cutting blades form a step-like structure"), 9 ("connecting lines of top endpoints of the first cutting blades is 20–60 degrees"), 31, 32 (same), Fig. 8 (depicting

dashed lines connecting the top endpoints of the cutting blades). That is, Wang draws a connecting line by drawing a line *through* the structures.

Turning back to the sentence in paragraph 35, we find that this passage uses "connecting lines" to mean a line that connects. A line that connects each of the flutes can be drawn at their starting locations at the cutting edge (i.e., at the chip evacuation flute). The figures reproduced below depict two options for what this cutting line would look like from the axial view:

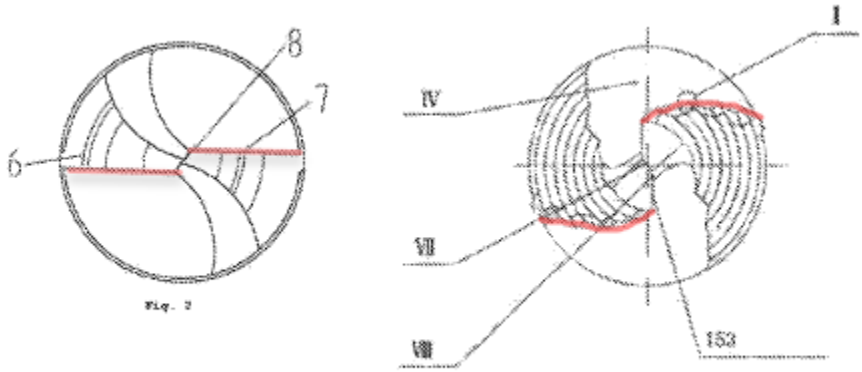

FIG. 4A

Ex. 1007, Fig. 2 (modified to add a red line highlighting the connecting lines); Ex. 1001, Fig. 4A (same). The figure on the left (Ex. 1007, Fig. 2) depicts straight connecting lines;[13] the figure on the right (Ex. 1001, Fig. 4A) depicts curved connecting lines.

Turning back to Wang, the first arrangement offered in paragraph 35 is one where the flutes are "adapted to a radian," which we find means that the flutes are set to a particular radian (angle) in terms of angular position. Ex. 1009 ¶ 35; *see also id.* at Figs. 1–4 (depicting a cutting surface with

[13] We cite to Exhibit 1007, Figure 2 but note that a similar arrangement is shown in Figure 1B of the '583 patent and Figure 2 of Wang.

fixed angular positioning). We find that this sentence is describing the arrangement where the flutes form a straight wall of cutting surfaces, as shown in the figure immediately above on the left. In that figure, the angular position is the same for the starting point of each cutting surface, making a straight line.

The second arrangement offered in paragraph 35 of Wang is one where that the connecting lines of the flutes form a "spiral structure." Ex. 1009 ¶ 35. If the flutes have increasing angular positions, they could form a spiral. This is shown in the figure immediately above on the right.

Both of these configurations are known in the art. *See, e.g.*, Ex. 1011, 1:32–36 ("[F]lutes on conventional step drill bits are typically straight, in parallel with the longitudinal axis of the particular step drill bit. In certain other conventional step drill bits, the flute has a constant angular helical pattern about the longitudinal axis."); Ex. 1012, 2:41–44 ("The flutes may be cut helically about the drill or longitudinally at a fixed angle to the drill axis."); Ex. 1017, 21 (a textbook defining "flutes" in twist drills as "[h]elical or straight grooves cut or formed in the body of the drill to provide cutting lips, to permit removal of chips, and to allow cutting fluid to reach the cutting lips"). Wang, however, while acknowledging the existence of both (*id.* at Fig. 2, ¶¶ 3 ("linear cutting blades"), 35 ("spiral")), has expressed a preference for the spiral shape. *Id.* ¶ 10. Accordingly, we find that paragraph 35 of Wang is describing two known options for the angular positioning of the flutes, not describing axial relief.

In contrast, Patent Owner argues that "arc-shaped flutes adapted to a radian" means the parallel flutes described in Wang, whereas "the connecting lines of the flutes form a spiral structure" means axial relief

(even if not otherwise described in Wang). Resp. 12–17; Sur-reply 3–7; *see also* Ex. 2034 ¶¶ 11, 13, 15–21, 24–26, 28–32, 38–40 (cited therein). First, Patent Owner does not meaningfully counter the more rational position provided by Petitioner and explained above. *See* Reply 4–6. Petitioner's position is consistent with all of Wang, but Patent Owner's position requires us to believe that this sentence sets out a new invention not otherwise described. Further in support of Petitioner's position is the fact that axial relief is well-known. Ex. 1017, 21 (found in the definition of "lip relief angle"); Resp. 9 (Patent Owner arguing that "axial relief is so ubiquitous and such a conventional element"). It is less likely that Wang would describe such a well-known concept in such a circumspect manner, when an unambiguous and familiar term is available. *Cf.* Ex. 1001, 2:46–48, 6:58–61 (using the phrase "axial relief" to describe axial relief); *see generally, e.g.*, Exs. 1010, 1011, 1012 (same). Second, we find that Patent Owner's position does not meaningfully engage with the language "adapted to a radian of the flank surface" in paragraph 35 of Wang. "A radian" of the flank surface deals with an *angular* position, which Patent Owner does not meaningfully address. In view of the above, we are not persuaded by Patent Owner's argument.

Patent Owner also argues that it does not make sense to describe the connecting lines as a "spiral" here because that would be contrary, in its view, to the earlier description of the connecting lines being "step-shaped." Resp. 15–17; Sur-reply 3–6. We find no problem with Petitioner's position, because the flutes in Wang are both "step shaped" and "spiral" depending on which coordinates are being used to describe the shape. The "step-shaped" connecting lines describe the shape of the cutting edges using radial and

axial coordinates. The "spiral" connecting lines describe the shape of the cutting edges using angular and axial coordinates. Neither is redundant because both provide unique information that describes shape of the structures involved in Wang's drill bit.[14,15] Accordingly, this argument is not persuasive.

Patent Owner also argues that the chip evacuation flute is spiral "in all of the drawings," so there is no need to describe the flutes as being spiral. Resp. 17–18. We are unaware of any authority stating that things shown in drawings should *not* be described in the specification. Nevertheless, as we

---

[14] This is similar to our hypothetical ant walking from top to bottom down the constant-angle helical flute of our hypothetical clear drill bit (described in the background section above). An observer having a longitudinal view would report the ant to be traveling in a sinusoidal path, but would report a circular path if she observed from the axial view. The ant would report he had traveled in straight line. Shapes of a three-dimensional object may appear different from different viewpoints, such that there is no inconsistency with reporting the shape of the connecting lines to be both "step-shaped" and "spiral."

[15] We also note that Patent Owner's drawing on page 5 of its Sur-reply misleadingly shows the edges of the cutting blade as a zigzag pattern. This is an artifact of the fact that a two-dimensional drawing is a projection of a three-dimensional shape, and thus introduces distortions (like maps of the Earth). The cutting surfaces and cutting tips form a smooth line where they intersect the chip evacuation flute, it is just that this line (rake face) is not perpendicular to the page, and thus the cutting surfaces in cutting tips appear to overhang the flute in a zig-zag pattern. Although the '583 patent and Wang have different disclosures, the idea we are conveying here is more clearly shown in Figures 3 and 4B of the '583 patent, where one can see the smooth rake surface, whereas a different view, e.g., Figure 4A, leads to appearance of the zig-zags. Similar zig-zag-inducing distortions can be seen by comparing the appearance of the rake faces in Figures 3 and 4 of Exhibit 1011, Figures 7 and 8 of Exhibit 1012, and Figures 9 and 10 of Exhibit 1010.

have already explained, Wang sets out two options for the configuration of the cutting surfaces (i.e., the beginning points of the flutes). Ex. 1009 ¶ 35. As we explained above, both of these are well-known, and Wang expresses a preference for the spiral configuration (i.e., acknowledges that it is a choice to make). Wang's choice of depicting the spiral configuration in its figures is consistent with its statements that such a configuration is preferred. *Id.* ¶ 10.

Patent Owner makes arguments that radial relief described in Wang "gives rise to a spiral formation." Resp. 20; *see also id.* at 18–21. This argument appears to offer a claim construction different from the one that Patent Owner agreed to and that we have adopted in this Decision, and thus fails. *See* Reply 7–8.

Lastly, Patent Owner argues that the passage in Wang describing the "step-like structure" as ensuring that "the flank surface does not touch workpieces during cutting" means that Wang describes axial relief. *Id.* at 20–21 (citing Ex. 1009 ¶ 31). This passage later clarifies what it is describing when it says that the second cutting blades are *at an angle relative to the rotational axis* "so that tail ends of the second cutting blades 6 are inclined downwards, and only starting ends of the second cutting blades (i.e., tops of the first cutting blades) touch the workpieces during cutting." Ex. 1009 ¶ 31. If the second cutting surface is inclined downwards (i.e., inwards) then the portion of the second cutting surface closest to the tip of the drill bit is positioned radially outward of later portions of the second cutting surface. In other words, the radial location of the second cutting surface angles downwards/inwards (toward the rotational axis) as the axial position increases away from the tip. Thus, we do not that find this passage

is talking about axial relief. Instead, we find that it is talking about diametrical relief.[16] Petitioner calls this radial relief. *See* Reply 7–8. Regardless of whether diametrical relief is a subset of radial relief or if they are distinct, the parties' agreed-upon construction is axial relief, not radial or diametrical relief.

In summary, we find that Wang does not explicitly disclose axial relief.

c) Axial Relief is not Inherent in Wang

As we explained in our background section, axial relief is a specific structural arrangement caused by the cutting blade being formed axially forward of its trailing surface. Even if axial relief is well-known in the art, written description support does not extend to things that are obvious to a person of ordinary skill in the art, but rather is limited to those things actually disclosed. *Lockwood*, 107 F.3d at 1571–72. We are cited no persuasive evidence that axial relief exists in every drill bit merely because it

---

[16] In our background section, we explained radial relief in terms of relief formed by a decrease in radius from the cutting edge to its flank surface. Radial relief in a single point twist drill is limited to the radius decreasing away from the cutting edge with increased *angular* position. *See, e.g.*, Ex. 1017, 21 ("body-diameter clearance"). That is because over increasing axial position, the cutting edge is extending radially out to meet the radius of the cylinder portion of the drill bit. However, in step drills there are segments of the cutting edge that are generally parallel to the axis of rotation. *See, e.g.*, Ex. 1011, Fig. 2 (items 8). This presents a new option for reducing the radius behind the cutting edge—with increased *axial* position. Exhibit 1010 describes this type of relief as "diametrical relief," to contrast with the term "radial relief." Ex. 1010, Fig. 1 (diametrical relief denoted as measurement B), Fig. 2 (radial relief denoted as measurement C), 1:63–2:6 (discussing diametrical relief over increasing axial position); 2:9–18 (discussing radial relief over increasing angular position).

is a drill bit. Patent Owner belatedly argues in its Sur-reply that "[a] POSA would understand that axial relief is necessary to the functioning of the drill bit disclosed by Wang." Sur-reply 7 (citing Ex. 2034 ¶ 11). This argument is first made in its Sur-reply and is untimely, which prevents Petitioner from properly responding. But even so, it is unsupported attorney argument. Patent Owner's argument relies on paragraph 11 of its expert declaration, but this paragraph does not support the sweeping statement made by Patent Owner. Instead, paragraph 11 merely states what we already know, that axial relief is well-known. Ex. 2034 ¶ 11. There is no discussion about it being *necessary* to the functioning of the drill bit in Wang. *See id.* Instead, as Petitioner and its expert have explained (Reply 3; Ex. 1044 ¶ 10), we find that axial relief, when present, is explicitly discussed. Ex. 1010, Fig. 1, 1:52–60; Ex. 1011, Fig. 2, 11:27–53; Ex. 1006, Fig. 1, 1:75–2:4; Ex. 1012, Fig. 5, 2:60–3:7; *see also* Ex. 1001, 2:46–48, 6:58–61 (explicitly discussing axial relief); Ex. 1007 ¶ 8 (foreign reference transcribing axial relief as "back angle"). Indeed, Patent Owner's patent appears to be a continuation in part specifically to add the axial relief information and to remove the parallel flute discussion. *Compare, e.g.*, Ex. 1001, Figs. 3–5 *with* Ex. 1009, Figs. 5, 6, 8, 9–11; *see also* Ex. 1001, 2:46–48, 6:58–61 (explicitly discussing axial relief); Ex. 1009 ¶¶ 6, 31 (explicitly discussing parallel flutes); *see generally* Ex. 1001 (not discussing parallel flutes); Ex. 1009 (not discussing axial relief). Based on the above, we do not find that axial relief is inherent in the disclosure of Wang.

d) Conclusion on Priority

Because axial relief is neither explicitly nor inherently taught in Wang, the axial relief recited and claimed in the '583 patent is not supported

by the written description of Wang. *Lockwood*, 107 F.3d at 1571–72; *PowerOasis*, 522 F.3d at 1306–07. Therefore, we agree with Petitioner that Wang is available as prior art.

E. Asserted Obviousness in view of Wang, Gentry, and Durfee (Claims 1, 2, 5, 7, 8, 12–15, 18, 19, and 22)

Petitioner asserts that claims 1, 2, 5, 7, 8, 12–15, 18, 19, and 22 would have been obvious in view of Wang, Gentry, and Durfee. Pet. 46–64. At a high level, and focusing on claims 1 and 8, Petitioner asserts that Wang discloses each limitation except for the cutting blade groups being formed "spirally" on the cone section of the drill bit, which is instead alleged to be taught in Gentry or Durfee. *See id.* at 49–50. Consistent with its position on priority, discussed above, Patent Owner admits that Wang discloses each limitation of the challenged claims. *See, e.g.*, Resp. 8 (arguing, "the Wang Priority Applications [] provide sufficient written description support for each recited element of the challenged claims of the '583 Patent"). Patent Owner does not make any arguments against the Wang ground beyond its priority argument, and we deem any argument that Patent Owner could have made to be forfeit. *See* Paper 14 at 9 (Scheduling Order, stating that "Patent Owner is cautioned that any arguments not raised in the response may be deemed waived.").[17] We agree with Petitioner that Wang discloses each

---

[17] Patent Owner does not offer objective indicia of non-obviousness for this ground. *See generally* Resp. 6–22; *see also id.* at 44–60 (cabining its objective indicia of non-obviousness arguments specifically for ground 3). In our Decision on Institution, we noted that Patent Owner's Preliminary Response only addressed objective indicia with respect to the third ground. Dec. on Inst. 24. Patent Owner carried over its arguments and did not rely on objective indicia for the Wang ground in its Response. Patent Owner improperly tries to undo this choice in its Sur-reply, stating that its

element of claims 1, 2, 5, 7, 8, 12–15, 18, 19, and 22 except for the "formed spirally" limitation as the parties have agreed to construe it. We adopt Petitioner's unchallenged position as our own. Pet. 46–64.

As to Petitioner's proposed modification of Wang to include axial relief, we find that Petitioner has offered persuasive evidence in support. Petitioner asserts that it was well-known in the art to provide axial relief to provide known benefits and that it would have been obvious to include axial relief to obtain those benefits, such as to provide clearance and reduce torque. *Id.* at 49–50. We find that the record provides ample reasons for doing so. *See, e.g.*, Ex. 1010, 1:52–60 (axial relief provides clearance); Ex. 1004 ¶ 150 (explaining that providing clearance reduces rubbing which reduces torque); Ex. 1011, 12:1–2 (axial relief provides a faster cutting bit); Resp. 9 (admitting that "axial relief is so ubiquitous and such a conventional element that a POSA would readily infer it or assume it with or without an

---

arguments with respect to ground 3 "apply equally with respect to each of Petitioner's obviousness grounds." Sur-reply 15. We reject Patent Owner's untimely attempt to change its positions. Patent Owner also appears to argue that objective indicia must be considered where present in the record even if no arguments were made, citing *Apple Inc. v. Samsung Elecs. Co., Ltd.*, 839 F.3d 1034, 1048 (Fed. Cir. 2016). Sur-reply 15. Patent Owner makes no attempt to explain how *Apple* supports its position. We fail to see how *Apple* stands for the proposition that we must *sua sponte* evaluate objective indicia in the absence of arguments of asserting objective indicia. Objective indicia is not untethered from the claims or the corresponding evidence of obviousness; it is therefore important to raise and discuss it with respect to different grounds applying different prior art to different claims. *See Graham v. John Deere Co. of Kan. City*, 383 U.S. 1, 17–18 (1966) (setting out four factual inquiries to make in evaluating a ground alleging obviousness); *Fox Factory, Inc. v. SRAM, LLC*, 944 F.3d 1366, 1373 (Fed. Cir. 2019) (explaining that the objective indicia must be considered in the context of what is claimed).

illustration or a thorough explanation that a given drill bit would contain some axial relief"); *see also* Ex. 1017 (a textbook explaining the factors in choosing a given amount of lip relief, i.e., axial relief). Because axial relief is known in the art to provide beneficial features, we are persuaded that a person of ordinary skill in the art would have considered it obvious to include axial relief. Accordingly, we determine that Petitioner has established that the subject matter of claims 1, 2, 5, 7, 8, 12–15, 18, 19, and 22 would have been obvious in view of Wang and Gentry or Durfee.

F. Asserted Obviousness in View of Bannister, Zhou, and Welty (Claims 1, 2, 5, 7, 8, 12, 14, 15, and 19)

Petitioner asserts that claims 1, 2, 5, 7, 8, 12, 14, 15, and 19 would have been obvious in view of Bannister, Zhou, and Welty. Pet. 64–81. At a high level, and focusing on claim 1, Petitioner asserts that Bannister discloses each claim limitation except for a conical first step surface, which is instead allegedly taught in Zhou or Welty. *See id.* at 68–69. Petitioner asserts that adding a conical step surface would lead to "reduced drilling axial resistance and torque, improved separation and expulsion of swarf, increased drilling efficiency, reduced binding, and drill bit durability." *Id.* (citing Ex. 1007, Figs. 1–3, Abstract, ¶ 14; Ex. 1008, Fig. 1, p.1, 1:3–22; Ex. 1004 ¶ 203); *see also* Ex. 1004 ¶ 171 (explaining that "swarf" means "chips"); Resp. 33 (equating chips with swarf). We first provide a brief overview of the asserted art and ground, then our analysis.

1. Overview of Asserted Art

a) Bannister (Ex. 1006)

Bannister is directed to a twist drill bit, where the tip of the bit is ground such that it presents a series of increasingly sized steps. Ex. 1006, p.1, 1:1–17. Figures 1 and 2 of Bannister are reproduced below:

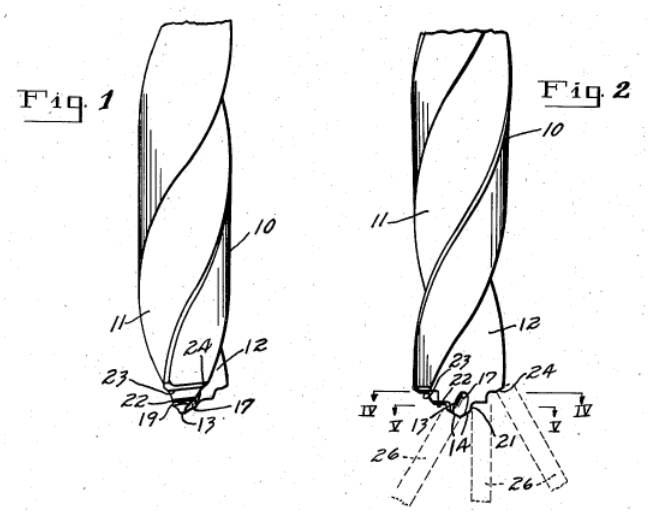

Ex. 1006, Figs. 1, 2. Figure 1 of Bannister, on the left, shows the working end of a twist drill bit, most notably depicting that cutting surface 21 has radial relief. *Id.* at p.2, 1:72–2:6. Figure 2 of Bannister, on the right, depicts the same twist drill bit as Figure 1, but rotated 90°, and more clearly shows the series of cutting edge surfaces. *Id.* at p.2, 1:27–40. Ghosted outlines 26 show how the drill bit is cut in order to form the steps. *Id.* at p.2, 2:19–24. Notably, the first step past the tip is cut such that it is perpendicular to the axis of rotation, whereas the last step is cut to form a conical section. *Id.* at p.2, 1:72–2:6. Bannister states that "cutting edges for the intermediate drill units are preferably substantially normal to the axis of the drill and accordingly will produce short chips." *Id.* at p.2, 1:7–10. Bannister acknowledges, however, that beveled (conical) edges "provide axial

clearance for the drill so that it will feed at the desired rate of speed." *Id.* at p.2, 2:1–4.

b) Zhou (Ex. 1007), Welty (Ex. 1008)

Zhou and Welty are provided for their depictions of conical sections at the tip of a stepped drill bit. Below, Figure 1 of Welty is reproduced on the left and Figure 1 of Zhou is reproduced on the right:

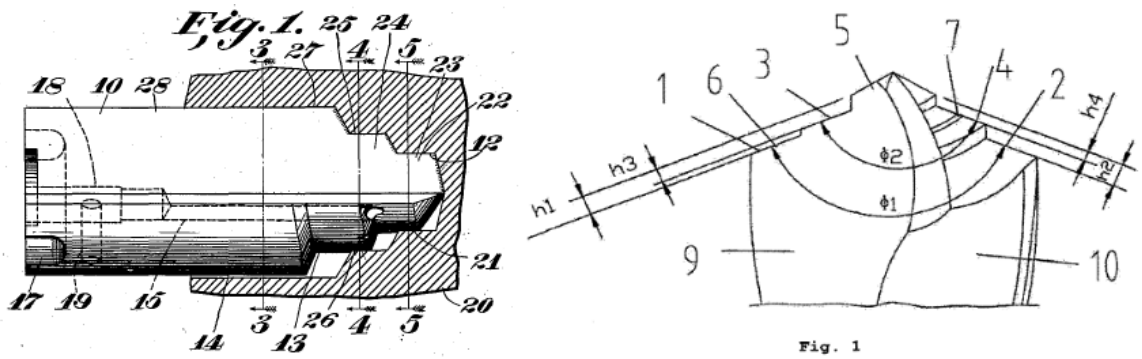

Ex. 1008, Fig. 1; Ex. 1007, Fig. 1. Figure 1 of Welty, on the left, depicts the tip of a drill bit with a series of conical steps. Figure 1 of Zhou, on the right, depicts a cutting tip having a series of conical steps. Welty states that the conical sections "successively increase in diameter from the initial cutting step so that the work may be easily drilled." Ex. 1008, p.1, 1:18–22. Zhou states that its edges "are intended to achieve a further reduction in the drilling axial resistance and torque, so that swarf is separated and expelled more smoothly, making it possible to further increase drilling efficiency and drill bit durability." Ex. 1007 ¶ 14. Petitioner's expert explains that a person of ordinary skill in the art would understand that conical sections "reduc[e] torque because only the top-most portion of the cylindrical surface cuts into the workpiece when it initially plunged into the workpiece." Ex. 1004 ¶ 203; *see also* Ex. 1017, 48 (a textbook explaining how the point angle, i.e, the conical shape, affects drilling performance).

2. *The Parties' Positions*

The parties' positions with respect to the Bannister, Zhou, and Welty ground are focused on independent claims 1 and 8. Petitioner asserts that Bannister discloses a drill bit satisfying each limitation of claim 1 and 8 except for the conical first step surface, which instead in Bannister is formed perpendicular to the axis of rotation. Pet. 68–69. Petitioner notes that the last step surface 24 in Bannister is conical, and asserts that it would have been obvious to modify Bannister's perpendicular step surface to be conical as well, in order to reduce drilling resistance, as taught in Zhou and Welty. *Id.* Petitioner asserts that use of such conical step surfaces are a common and well-known technique used to reduce cutting edge wear and resistance. *Id.* at 69 (citing, e.g., Ex. 1004 ¶ 203).

Patent Owner argues that Petitioner has not shown how the prior art teaches the major and minor cutting edges (Resp. 23–24, 27–30) or that the cutting blade groups are configured to crush cutting chips into finer chips (*id.* at 24–27). Patent Owner also argues that it would not have been obvious to make the combination because it would add redundant features to Bannister (*id.* at 31–35) and also violate its principle of operation (*id.* at 35–38). Patent Owner argues that there is no reason to combine the teachings of Bannister, Welty, and Zhou. *Id.* at 38–41. Patent Owner does not allege objective indicia of non-obviousness. *See generally* Resp. 8–16; *see also supra* n.17.

3. *Analysis of the Bannister-Zhou-Welty Ground*

Patent Owner contests several of Petitioner's positions.

a) *Cutting Edge Shape*

Independent claims 1 and 8 state that the major and minor cutting edges of the composite cutting blade groups are defined by the intersection of a step surface and the sidewall of the spiral flute. Petitioner provides marked up copies of Figure 2 of Bannister to show how its major and minor cutting edges are defined by the sidewalls of the spiral flute. Pet. 70–72. These figures are reproduced below:

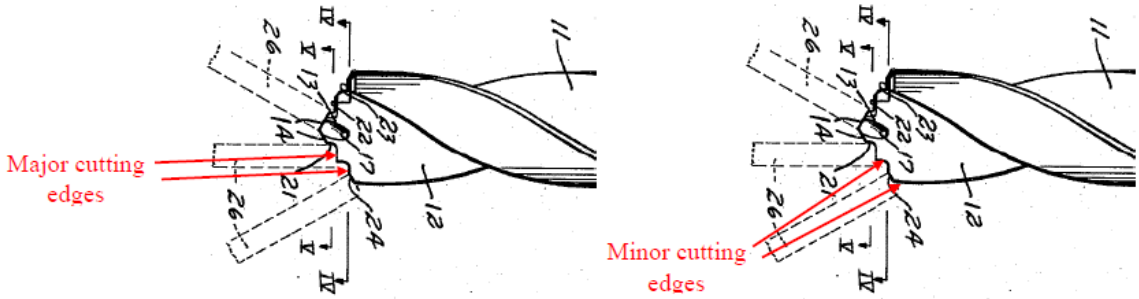

Pet. 70–71; *see also* Ex. 1006, Fig. 2 (unmodified copy). Petitioner asserts that these cutting edges are "defined by the intersection of a step surface and the sidewall of the spiral flute." *Id.* at 70, 71; *see also* Ex. 1004 ¶¶ 207–212. Patent Owner argues that the sidewall of the spiral flute is spiral, meaning that the cutting edges must also be spiral or curved. Resp. 24, 27–29; Sur-reply 12. Patent Owner argues that Bannister's cutting surfaces are straight, not spiral, and thus do not meet the claim limitation. *Id.* at 24, 27–30. Petitioner replies that the claims do not require curved major and minor cutting edges. Reply 11–14. Petitioner points out that a basic twist drill has a spiral flute with straight cutting blades, as can be seen in Figures 1A–1C of the '583 patent. *Id.* at 12–13.

Patent Owner's argument is essentially that the major/minor cutting edge limitations require that the cutting edges of different cutting blade groups have increasing angular positions as they are located further back from the tip. The claim, however, merely requires that the cutting surfaces are formed at the spiral flutes. As Petitioner has shown, cutting surfaces formed by a spiral flute do not need to have any curvature. Ex. 1001, Figs. 1A–1C; *see also* Ex. 1017, 22 (Fig. 9-15, similar), 48 (Fig. 9-41, showing several straight cutting edges on a twist drill). Patent Owner's argument also appears to presume that there are many cutting blade groups, but the claim only requires two. *See* Resp. 42 (arguing, in a different ground, that there would need to be "four or five to arguably form a spiral of any sort"). That is, if one had many cutting blade groups in a design like Bannister, either the cutting blade groups would be vanishingly tiny, or they would have to begin traveling in angular position with the spiral flutes. But Bannister only has two sets of cutting blade groups, so they all fit at the tip of the drill. *See also* Ex. 1046, 85:20–88:11 (Patent Owner's expert explaining that his position—identical to Patent Owner's argument in the brief—is based on a Matco drill bit having many steps, but admitting that there are "certain combinations" where you get "a drill point surface that it is straight"). Accordingly, we are not persuaded by Patent Owner's argument. Instead, we agree with Petitioner that Bannister shows its major and minor cutting edges defined by the sidewalls of a spiral flute. Ex. 1006, Fig. 2; Pet. 70–72; Reply 11–14. We do not add an additional, unclaimed requirement setting the curvature of either edge.

b) Configured to Crush

Independent claims 1 and 8 state that "each of the plurality of composite cutting blade groups is configured to crush cutting chips into finer chips." As we discussed in the claim construction section, we explained that this limitation is setting out a necessary result of having the total cutting surface divided into a number of cutting blade groups. Patent Owner argues that Bannister does not perform this function, and gets into a discussion about the chip shape made by Bannister's cutting edges. Resp. 24–27. However, regardless of Bannister's chip shapes, Patent Owner's arguments are not based on the proper construction of the claims, and are unpersuasive. We find Bannister's multi-step surface is configured to crush cutting chips into finer chips in the manner required by the claims.

c) Rationale

Petitioner asserts that Bannister's cutting edges 22, 23 are perpendicular to the rotational axis of the drill bit. Pet. 68. Petitioner asserts, however, that it is known to provide conical (non-perpendicular) step surfaces and drill bits. *Id.* Petitioner points to several drill bits which do, including Bannister itself. *Id.* at 68–69 (citing Exs. 1007, 1008, 1011; Ex. 1004 ¶ 203). Petitioner asserts that the reason a person of ordinary skill in the art would choose to make Bannister's first step surface conical is, *inter alia*, so that the drill bit could cut with less axial resistance and torque. *Id.*

We find that Petitioner has established that it was known to provide conical first step surfaces in twist drill bits having composite cutting blade groups. Ex. 1006, Fig. 1; Ex. 1007, Fig. 1. Twist drill bits nearly always have a conical shape leading cutting edge. *See* Ex. 1017, 48–50 (discussing

in detail the conical shape of cutting edges and the reasons one may want to vary the shape to achieve different effects); Ex. 1004 ¶ 203 (citing additional references). Particular to this ground, we find that both Zhou and Welty depict conical step surfaces in drill bits having cutting blade groups. *See, e.g.*, Ex. 1007, Fig. 1, ¶ 14 (stating that asymmetrical edge heights, which would include the conical aspect of the cutting edges, reduce "the drilling axial resistance and torque"); Ex. 1008, Fig. 1, p.1, 1:18–22 (stating that the cutting edges "successively increase in diameter . . . so that the work may be easily drilled"); *see also* Ex. 1009, Fig. 5; Ex. 1010, Fig. 1; Ex. 1011, Fig. 2; Ex. 1012, Fig. 1 (each showing conical first step surfaces). We find persuasive Petitioner's expert's technical explanation that the major cutting edge more gradually engages the workpiece when it is conical, which reduces drilling axial resistance and torque. Ex. 1004 ¶ 203. Petitioner's expert also persuasively explains that conical edges result in the cutting edge wearing more slowly. *Id.* These positions are bolstered by the strength of the technical logic offered (torque being proportional to distance from the axis of rotation), as well as the fact that it is consistent with the teachings of the prior art, which use conical configurations and describe their inventions as providing these types of benefits. *See, e.g.*, Ex. 1008, p.1, 1:18–22; Ex. 1017, 48–50 (discussing how the conical shape, also known as the point angle, affects cutting performance of drill bits). Thus, we find that a person of ordinary skill in the art would recognize that conical surfaces reduce drilling axial resistance and torque because the cutting edge more gradually engages the workpiece, and accordingly reduces cutting edge wear. In sum, we find that a person of ordinary skill in the art is familiar with conical cutting edges and has a reason to include them. *KSR Int'l Co. v. Teleflex*

Inc., 550 U.S. 398, 417 (2007) ("if a technique has been used to improve one device, and a person of ordinary skill in the art would recognize that it would improve similar devices in the same way, using the technique is obvious unless its actual application is beyond his or her skill"); *Intel Corp. v. PACT XPP Schweiz AG*, 61 F.4th 1373, 1380 (Fed. Cir. 2023) ("if there's a known technique to address a known problem using 'prior art elements according to their established functions,' then there is a motivation to combine") (quoting *Intel Corp. v. Qualcomm Inc.*, 21 F.4th 784, 799–800 (Fed. Cir. 2021)).

We find that applying conical cutting edges to Bannister's drill bit would have been within the level of ordinary skill in the art because they were widely known, used, and understood. *See generally* Exs. 1006, 1007, 1008, 1009, 1010, 1011, 1012, 1017; Ex. 1017, 48–50 (textbook discussing options for the shape of a conical cutting edge, in general). Lastly, we find that Bannister, Zhou, and Welty are analogous art. They are in the field of metal cutting tools and each offer solutions relevant to the problems of metal cutting tools and specifically drill bits. Ex. 1001, 1:16–17 (describing the technical field as "metal cutting and metal cutting tools"), 1:29–31, 38–40 (describing problems in the field relating to positioning, speed, efficiency, and cutting forces); Ex. 1006, 1, 1:1–11 (describing the invention as being more effective at a number of drilling tasks such as power and positioning); Ex. 1007 ¶ 14 (describing the invention as improving drilling efficiency and durability by reducing axial resistance and torque); Ex. 1008, 1, 1:1–22 (describing the invention as improving drill accuracy and longevity while reducing power requirements and binding). In sum, we find that Petitioner has established a reason with rational underpinnings for modifying Bannister to include conical edges.

We acknowledge that Bannister teaches non-conical major cutting edges, gives a specific reason for doing so, and Petitioner's proposed modification is to make them conical. Specifically, Bannister teaches that forming the cutting edges perpendicular to the rotational axis "will produce short chips." Ex. 1006, p.2, 1:7–10. Bannister teaches that these short chips will later be carried away by the longer chips produced by the conical cutting edges. *Id.* at 2:7–18. Patent Owner asserts that Bannister's "basic design principle is that small chips are created by the central drilling unit 13 and the square cutting edges 22 and 23 of successively larger drill units." Resp. 38. Patent Owner offers little in the way of analysis to support such a specific principle of operation, and its position is unpersuasive. Instead, reading Bannister and noting the focus of the discussion in the first two columns, we find that Bannister's principle of operation is based on grinding the point to present a series of drilling units. Ex. 1006, p.1, 1:55–2:35. In particular, Bannister states that "in accordance with my invention, I provide a drill in which the beforementioned difficulties are overcome. I grind the drill so that the point presents a series of drilling units." *Id.* at p.1, 2:32–35. Thus, Bannister directly links the difficulties to be overcome with the provision of a series of drilling units. It is not until the second page of Bannister until we see the perpendicular cutting edges, which are merely described as *preferable*. *Id.* at p.2, 1:7–10. Accordingly, Patent Owner's proposed principle of operation is not persuasive.

Further, we are aware of no prohibition in modifying a preferable feature of a given reference. The key is that there must be a reason with rational underpinning for making the modification. As Petitioner has explained, the reason is increased drilling performance. Pet. 68–69; Reply

15 (citing Ex. 1004 ¶ 203; Ex. 1044 ¶ 33). We are presented with no compelling reason to believe that the modified Bannister drill bit would not still work as a drill bit. Petitioner's proposed modification does not eliminate the series of drill units. Bannister even acknowledges the perpendicular configuration as *preferable*, not mandatory. Ex. 1006, p.2, 1:7–9. Even so, the relevant perspective is not from Mr. Bannister's viewpoint but rather from a person of ordinary skill in the art. Petitioner persuasively explains that the entire idea in Bannister of producing short chips which are carried away by longer chips has been debunked in the time since Bannister was published. Reply 9 (citing Ex. 1044 ¶¶ 20–21); *see also* Ex. 1006 (noting that Bannister was filed in 1938); Ex. 1050, 24 (discussing how chip formation theory has changed over the years, especially after a seminal work in 1941). Accordingly, a person of ordinary skill in the art at the time of invention, being aware of this, would have had less reason to stick with the original disclosure in Bannister because they knew that there are additional added performance benefits for modifying, and the underlying chip-removal premise for having the feature was faulty to begin with.

In a similar vein, we do not find that improving a device that already claims to be improved is "redundant." A redundant feature could be thought of as one that adds no value beyond what already exists. An improvement, as its name implies, improves on an existing thing and therefore is not what already exists. We do not see any persuasive evidence or argument from Patent Owner that the proposed modification would not actually improve Bannister's drill bit as proposed. *See generally* Resp. 31–38; Sur-reply 10–11. Instead, Patent Owner focuses on language in Bannister which claims it is an improvement over the prior art or provides certain features such as chip

removal, and appears to suggest that no one is allowed to improve on these features or change them to make it better. *See, e.g.*, Resp. 31 (citing Ex. 1006, p.1, 1:1–5 ("a drill which shall be operable with much less power")). Obviousness is judged from the perspective of the person of ordinary skill in the art, not the beliefs of Mr. Bannister himself. 35 U.S.C. § 103. A person of ordinary skill in the art is familiar with all of the art, not just Bannister, and thus is not limited to doggedly following every word of a reference without consideration of what else they know. *KSR*, 550 U.S. at 421 ("A person of ordinary skill is also a person of ordinary creativity, not an automaton."); *Custom Accessories, Inc. v. Jeffrey-Allan Indus., Inc.*, 807 F.2d 955, 962 (Fed. Cir. 1986) ("The person of ordinary skill in the art is a hypothetical person who is presumed to know the relevant prior art."). Even ordinarily skilled artisans have skill and are looking to improve the prior art. *KSR*, 550 U.S. at 421 ("a person of ordinary skill in the art has good reason *to pursue* the known options within his or her technical grasp") (emphasis added); *In re Sovish*, 769 F.2d 738, 743 (Fed. Cir. 1985) (a person of ordinary skill in the art is presumed to have skill). Petitioner has provided a specific reason why cone-shaped cutting edges would improve the cutting capabilities of Bannister and has cited persuasive evidence in support of its position. We do not find this improvement redundant but rather a known approach to improve a particular characteristic of the drill bit. Patent Owner's arguments against are not persuasive.

4. Conclusion for the Bannister-Zhou-Welty Ground

We have reviewed Petitioner's ground and adopt its analysis as our own. Pet. 64–82. We have reviewed above those aspects of the ground that Patent Owner challenges, but have determined that Patent Owner's

arguments are unpersuasive. Patent Owner does not separately challenge the dependent claims in this ground, and all unchallenged factual positions have been deemed admitted. *See* Paper 14 at 9 (Scheduling Order, stating that "Patent Owner is cautioned that any arguments not raised in the response may be deemed waived."). Petitioner has addressed each limitation in each claim, has shown it in the prior art, and has provided reasons with rational underpinnings for taking the teachings of the prior art and arriving at the claimed invention, all of which we adopt as our own. *See* Pet. 64–82. Patent Owner does not assert objective indicia of non-obviousness. *See supra* n.17. We determine that Petitioner has shown that claims 1, 2, 5, 7, 8, 12, 14, 15, and 19 would have been obvious in view of Bannister, Zhou, and Welty.

G. Asserted Obviousness in View of Bannister, Zhou, Welty, and Korb (Claims 13, 18, and 22)

Petitioner asserts that claims 13, 18, and 22 would have been obvious in view of Bannister, Zhou, Welty, and Korb. Pet. 82–85. Figure 7 of Korb is reproduced below (rotated 90° clockwise):

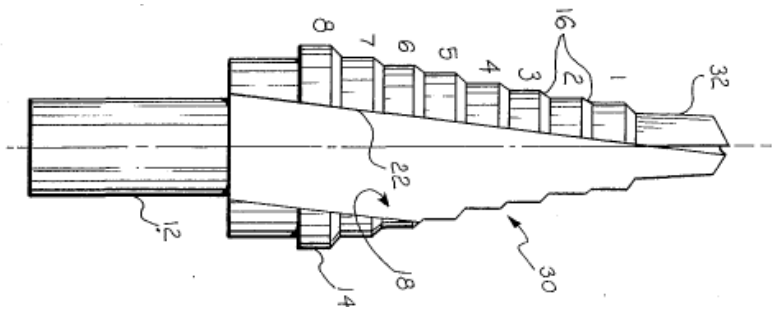

Ex. 1012, Fig. 7. Figure 7 of Korb depicts a step drill bit, in particular one having split-tip pilot drill point 32 that is taller than the other steps on the bit. *Id.* at 3:21–27. Petitioner's expert explains that having a tall pilot point allows the user to have a deeper guide before the cutting blade groups reach

the workpiece during operation. Ex. 1004 ¶ 247. Petitioner's expert explains that "such a configuration would provide increased stability and a straighter, more accurate, and more circular hole." *Id.*

Korb also explains that the chip evacuation flutes could be cut helically around the drill bit or in a straight line that is parallel to or offset from the axis of rotation. Ex. 1012, 2:41–44. Petitioner's expert explains that spiral flutes help with the removal of chips. Ex. 1004 ¶ 253.[18]

1. Claim 13

Claim 13 depends from independent claim 8 and states that the minor cutting edge length of the top blade is greater than each of the minor cutting edges of the plurality of composite cutting blade groups. Petitioner asserts that it would been obvious to modify Bannister's top blade to be extended in the manner required by claim 13, in view of the teachings of Korb. Pet. 82–83. According to Petitioner, Korb teaches that it was known to use this longer top blade to provide increased stability and a more accurate hole. *Id.* at 83. Patent Owner does not appear to offer any arguments against Petitioner's ground for claim 13. We agree with, and adopt as our own, Petitioner's position for claim 13. We are persuaded that the tall tip configuration in Korb would provide the stated benefit to improve Bannister, and that it would have been obvious and predictable for a person of ordinary skill in the art to do so.

---

[18] In contrast, straight-line flutes can be used to provide predictable rubbing locations that in turn can be used to hold the bit in place. *See, e.g.*, Ex. 1008, p.1, 1:46–2:32 (explaining how cutting edges 23, 25, and 27 are supported by heels 21 and 26 so that so that they are "in spaced relation with the work"). They can also be used to produce short chips and limit the tendency of the drill bit to bite into the material. Ex. 1017, 55.

2. Claims 18 and 22

Claims 18 and 22 depend from independent claims 8 and 1, respectively, and both recite that "the cutting tips of the plurality of composite cutting blade groups are formed spirally on a cone portion exterior from a front end of the cone portion to a rear end of the cone portion." Petitioner states that Bannister contemplates having multiple steps (i.e., cutting blade groups), and argues that it was known in the art to have cutting tips arranged spirally along the side of the spiral flute in the manner claimed. Pet. 84. Petitioner cites to references that do so, and asserts that it would have been obvious to adopt this known configuration, which is known to be an efficient way to remove cutting chips. *Id.* at 84–85 (citing Exs. 1011, 1012; Ex. 1004 ¶¶ 252–254). In particular, we note that Petitioner cites to Korb's disclosure that flutes, in general, "may be cut helically about the drill or longitudinally at a fixed angle to the drill axis from about 0 to 15 degrees." *Id.* at 84 (citing Ex. 1012, 2:41–43). Petitioner notes that Bannister envisions expanding his invention to cover more steps: "[a]s the diameter of the drill increases, the number of drill units may be increased." *Id.* at 84 (quoting Ex. 1006, p.2, 2:70–p.3, 1:2).

Patent Owner argues that Korb is a step drill, and accordingly a person of ordinary skill in the art would not combine its features with those of Bannister. Resp. 42–44. We reject Patent Owner's arguments that step drills are not relevant to the claimed invention. Patent Owner offers no persuasive reason to believe that a person of ordinary skill in the art would not be familiar with step drills, nor that the problems faced by designers making step drills do not overlap with the problems faced by designers making twist drills. Indeed, the wall Patent Owner attempts to build

between twist drills and step drills is illusory. Ex. 1017, 25 (listing "step drills" as one of the types of twist drills, and further noting that "[s]tep drills can frequently be made by grinding down and stepping conventional drills"). A person of ordinary skill in the art would consider them part of the same field of cutting tools. *Id.*; *see also* Ex. 1011 (discussing both twist drills and step drills); Ex. 1001, 1:16–17 (defining the field of endeavor as "metal cutting tools"); Ex. 1017, 25 (discussing step drills as a type of twist drill). Further, we find that the problems faced by inventors of step drills are relevant to the problems faced by the inventor of the '583 patent. Ex. 1001, 1:29–31, 37–40 (noting problems such as positioning, cutting speed, efficiency, power requirements, and easily damaged cutting edges); Ex. 1012, 1:51–56 (noting problems such as positioning). Several prior art references have combined features of twist drills and step drills. Ex. 1006, Fig. 1; Ex. 1007, Fig. 1; Ex. 1009, Fig. 3; Ex. 1014, Fig. 1. Patent Owner appears to be making distinctions based on the specific items being cut (e.g., sheet metal), but none of that has to do with the limitations of the claims. Accordingly, we are not persuaded by this line of reasoning. Instead, Korb is analogous art, as we found for Bannister, Zhou, and Welty in the previous ground.

Patent Owner also makes the argument that the two cutting tips of the combined prior art "cannot, by themselves, actually form a spiral arrangement." Resp. 42. Patent Owner continues that "a plurality of cutting tips would have to number four or five to arguably form a spiral of any sort." *Id.* Patent Owner points to no limitation in the claim or passage in the specification that would imply such a requirement. Patent Owner cites to its expert for support, but the expert merely parrots the argument, without

providing any support for the opinion. Ex. 2003 ¶ 42. As Petitioner asserts, Bannister contemplates additional "drill units" (cutting teeth). Pet. 84 (citing Ex. 1006, p.2, 2:70–p.3, 1:2). Accordingly, this argument is unpersuasive.

Petitioner has offered a reason with rational underpinnings for incorporating the features of Korb into the cutting tip of Bannister. Korb teaches that both straight-wall and spiral options were known in the art. Ex. 1012, 2:41–44; *see also* Ex. 1011, 1:33–37. We credit the testimony of Petitioner's expert that spiral flutes were known in the art to help lift away swarf. Ex. 1004 ¶ 253. Accordingly, we find that Petitioner has established that a person of ordinary skill in the art would have a reason to modify Bannister's cutting edges to follow a spiral pattern as shown in Korb in order to help lift away swarf. We now turn to the last issue Patent Owner raises, objective indicia of non-obviousness.

3. Objective Indicia of Non-Obviousness

Patent Owner asserts that objective indicia of non-obviousness overcomes any prima facie obviousness case. Resp. 44–60; Sur-reply 15–26. Patent Owner first asserts that there is a nexus between the challenged claims and its alleged objective indicia. Resp. 46–49; Sur-reply 15–19. Patent Owner also alleges that its evidence shows copying (Resp. 49–55; Sur-reply 20–21), industry praise (Resp. 55–56; Sur-reply 21–22), commercial success (Resp. 56–58; Sur-reply 22–26), and satisfaction of a long-felt need (Resp. 58–60). Petitioner disputes these allegations. Reply 18–28.

a) Nexus

Patent Owner bears the burden of establishing nexus. *WMS Gaming Inc. v. Int'l Game Tech.*, 184 F.3d 1339, 1359 (Fed. Cir. 1999). A presumption of nexus is only appropriate if "the patentee shows that the asserted objective evidence is tied to a specific product and that product embodies the claimed features, and is coextensive with them." *Fox Factory, Inc. v. SRAM, LLC*, 944 F.3d 1366, 1373 (Fed. Cir. 2019) (cleaned up). The coextensiveness requirement is not met simply by showing that "the patent claims broadly cover the product that is the subject of the evidence of secondary considerations." *Id.* at 1377. Coextensiveness can be thought of as "the degree of correspondence between a product and a patent claim." *Id.* at 1374. "[T]he existence of one or more unclaimed features, standing alone," does not necessarily defeat coextensiveness. *Id.* Instead, "the concept of unclaimed features is best viewed as part of a spectrum." *Teva Phrama. Int'l GmbH v. Eli Lilly and Co.*, 8 F.4th 1349, 1361 (Fed. Cir. 2021). "The presumption analysis requires the fact finder to consider the unclaimed features of the stated products to determine their level of significance and their impact on the correspondence between the claim and the products." *Id.* (citing *Fox Factory*, 944 F.3d at 1375). The nexus analysis should focus on and consider the difference between the prior art and the claimed invention, and the extent to which the objective indicia speaks to these gaps. *Campbell Soup Co. v. Gamon Plus, Inc.*, 10 F.4th 1268, 1278 (Fed. Cir. 2021) ("[T]o establish a nexus, [the patent owner] needed to present evidence that the commercial success and praise of the [product] derived from those 'unique characteristics.'") (citing *Fox Factory*, 944 F.3d at 1373–74). Simply providing evidence tied to features already

present in the prior art does not satisfy the inquiry. *Id.* ("objective indicia must be linked to a [] patent claim's unique characteristics"); *Fox Factory*, 944 F.3d at 1378 (stating that for patents claiming combinations of prior art features, a patentee must show that the secondary considerations evidence is "attributable to the claimed combination of [prior art features], as opposed to, for example, prior art features in isolation or unclaimed features").

Patent Owner's assertions regarding nexus are conclusory and extensively incorporate by reference other documents. *See generally* Resp. 46–49; Sur-reply 15–19. Patent Owner begins by citing to sixteen claim charts. Resp. 46 (citing Exs. 2074–2089). Patent Owner then alleges that the products it has licensed "are coextensive with the patented invention" because all of them are drill bits. *Id.* at 47. Patent Owner asserts that there are no unclaimed features, but in support of that allegation merely cites to its expert, who in turn says the same words without providing any support for his opinion. *Id.* at 47–48 (citing Ex. 2034 ¶ 150).

We acknowledge that the claims of the '583 patent are directed to a drill bit and that Patent Owner's evidence is directed to drill bits. However, nexus cannot be established by showing that "the patent claims broadly cover the product that is the subject of the evidence of secondary considerations." *Fox Factory*, 944 F.3d at 1377. Indeed, Petitioner argues that Patent Owner has not shown the "formed spirally" limitation. Reply 25–26. Patent Owner counters that their expert "confirmed that the products he provided claim charts for exhibit axial relief." Sur-reply 16. But Patent Owner does not provide a citation or explanation. Patent Owner provides a drawing in its brief apparently showing axial relief, but we do not credit this attorney argument. *Id.* Reviewing its briefs and the evidence cited therein,

we determine that Patent Owner has not met its burden in showing that the licensed products exhibit the "formed spirally" limitation. Patent Owner continues that "[t]he '583 patent's novelty lies in its unique drill tip configuration, which combines the conical portion of a twist drill with a plurality of composite cutting blades of a step drill." *Id.* at 17. These features are already present in Bannister and Zhou, as we have explained above. *See, e.g.*, Ex. 1006, p.1, 2:34–35 ("I grind the drill so that the point presents a series of drilling units.").

Patent Owner advises us to view the photos and reach our own conclusion that the surfaces show axial relief, but we decline that invitation. Sur-reply 16 (arguing that "axial relief is readily apparent from a visual examination"). As is hopefully clear from our discussion on drill bit geometry, it is difficult to view a two-dimensional photo of a three-dimensional object and be certain of the actual shapes. Many of the photographs are zoomed in or difficult to ascertain the orientation of the bit. We cannot find by a preponderance of the evidence that the drill bits in the claim charts exhibit axial relief via a *sua sponte* "visual examination" of photographs due to the uncertainty of establishing such a precise relationship in view of the distortive effects of photographs. In any event, it is Patent Owner's burden to make that showing, and it is something that would have been easy to do (if it were present) using measurements and/or by providing a technical data package (akin to blueprints). Thus, we find that Patent Owner has not demonstrated that the licensed products are co-extensive with

the claimed invention.[19] *Accord Volvo Penta of the Americas, LLC v. Brunswick Corporation*, 81 F.4th 1202, 1210–11 (Fed. Cir. 2023) (holding that the Board correctly found conclusory arguments and declaration to be insufficient to establish a nexus). Nevertheless, we review the specific evidence offered for non-obviousness for completeness. Aspects of our analysis below helps further illustrate that Patent Owner has not established nexus.[20]

b) Copying

Patent Owner argues that Petitioner has copied its claimed invention. Resp. 49–55; Sur-reply 20–21. Patent Owner does not sell any drill bits. Instead, Patent Owner has ownership interests in a manufacturer (Tec-Spiral) and a supplier (Tsteigen) of drill bits. Ex. 2035 ¶¶ 2–4. These companies then sublicense to Astro (a distributor) who then further sublicenses to Matco (a distributor / retailer). *Id.* ¶ 5.[21] Astro calls its drill bit line "Easy-Boost" whereas Matco calls its product line "Hyper-Step." *Id.* ¶¶ 8–9.

We are unmoved by Patent Owner's arguments based on Petitioner's drawings of drill bits that also contain the words "Hyper-Step." Resp. 52–53 (discussing Exs. 2062, 2063). Petitioner points out that Exhibit 2063 was

---

[19] Patent Owner also argues that certain alleged infringing products have nexus to the claimed invention, but again Patent Owner's analysis is conclusory and faulty for the same reasons. Resp. 46.
[20] We recognize that nexus can be established by a presumption of nexus for a coextensive product, as well as by demonstration of "unique characteristics" of a product. *Fox Factory*, 944 F.3d 1366, 1373–74 (Fed. Cir. 2019). Patent Owner's showings fail under any theory of nexus.
[21] Patent Owner does not list Tec-Spiral, Tsteigen, Astro, or Matco as real parties in interest. *See* Papers 5, 11 (Mandatory Notices).

created more than a year after the introduction of their competing drill bit for the specific purpose of pointing out the substantial differences between the two once litigation had begun. Reply 20–21 (citing Ex. 1045 ¶¶ 10–12); Ex. 1045 ¶ 10 ("Exhibit 2063 was created in response to the 'cease and desist' letter that [Petitioner] received from Patent Owner on or about June 4, 2021, for the specific purpose of illustrating that the products are not the same.") (emphasis in original). The drawing in Exhibit 2062 was produced in August 2020, and shows a drill bit with the label "Hyper-Step." Patent Owner claims that this is evidence that Petitioner called its *own* drill bit a Hyper-Step drill bit (Resp. 52), but we do not read the evidence this way. We are given little context as to Exhibit 2062, except that the drawing was made by Petitioner's drafter and sent to its director of engineering in August of 2020. Ex. 2062, 1. The email does not say why. Petitioner asserts that it began selling its competing product in spring of 2020 (Ex. 1044 ¶ 7), so regardless of why it was made, the timing does not work out for Patent Owner's theory that this somehow establishes copying. *See also* Ex. 1044 ¶ 9 (Petitioner's director of engineering testifying that Petitioner "did not make any drawings or take any measurements of the Hyper-Step drills during our development work. We made no effort to replicate the exact design of the Hyper-Step drills.").

Patent Owner provides a copy of what it alleges to be "an item:item cross-reference to the Matco [tools]." Resp. 52 (citing Ex. 2064). Even if we are to assume that this document shows that Petitioner wanted to know which of its products most closely aligned with which of Matco's products, we fail to see how this shows copying. Business competitors would be presumed to keep track of competing products in their ordinary course of

business; it would seem foolish for a company not to know what their competitors are doing.

Patent Owner also argues that there is evidence that the alleged copiers of the '583 patent advertise the advantages of its design. Resp. 53 (citing Exs. 2025, 2026, 2027, 2048, 2058); *id.* at 54 (citing Ex. 2028). We have reviewed these advertisements, but they describe benefits of a step-tip drill bit in a manner similar to the way Bannister describes the advantages of his step-tip drill bit. For example, Exhibit 2027 states that the "[s]plit-point design that gives accurate starting and is selfcentering eliminating the need for the use of a center punch" and "reduces heat generation" (Ex. 2027, 1) while Bannister states that "the stepped cutting edges, forms a pilot for succeeding the larger drilling unit, so that holes drilled with my improved drill are perfectly round and straight" with "less heat generated," and further noting that prior art drill bits required a punch. Ex. 1006, p.1, 1:5–11 (generates less heat; drills in one operation), 2:1–35 (design overcomes need for "punch mark" or using multiple drills), p.2, 2:45–54 (stepped cutting surfaces). We do not find in these advertisements an emphasis on axial relief, conical step surfaces, or spiraling cutting tips, but rather a step-tip design like in Bannister or Zhou.[22]

Patent Owner lastly alleges that a German company has filed multiple requests for *ex parte* reexamination of the '583 patent and that they have refrained from entering the US marketplace in the meantime. Resp. 54–55. Patent Owner asserts that this is "a clear instance of commercial acquiescence." *Id.* at 55. We find Patent Owner's position to be conjecture.

---

[22] We note these features because they are the features that Petitioner asserts would have been obvious to add to Wang or Bannister.

If anything, even if we accept as true that three reexaminations have been filed by one company, this is evidence that the company does not believe the patents to be valid and (depending on the timing, which Patent Owner does not provide) potentially a recognition that Patent Owner has initiated a lawsuit over the patent and the company is taking reasonable precautions before proceeding to market.

The remainder of Patent Owner's arguments are based on out-of-court statements made by a third party that have been excluded as hearsay. *See generally* Resp. 49–55 (citing Exs. 2047, 2055, 2056, 2057, 2059, 2060).

c) Industry Praise

Patent Owner begins by asserting that Petitioner's and a third party's "internal documents (discussed in detail above) concerning their testing of [Patent Owner-licensed] drill bits and the reasons for deciding to copy the same are particularly telling here." Resp. 55. However, Patent Owner does not cite to any particular evidence or provide any specific analysis, making it difficult for us to piece together its argument. *United States v. Dunkel*, 927 F.2d 955, 956 (7th Cir. 1991) ("A skeletal 'argument', really nothing more than an assertion, does not preserve a claim. . . . Especially not when the brief presents a passel of other arguments. . . . Judges are not like pigs, hunting for truffles buried in briefs.").

Patent Owner turns to "positive reviews" which allegedly discuss features of the patented invention. Resp. 55–56. The first piece of evidence is a website screenshot allegedly showing reviews, presumably of people who have purchased drill bits. Ex. 2011. Stepping over the fact that these

are anonymous reviews appearing on a public website,[23] even if we were to assume that consumers liked the product, it is not clear to us that *consumers* are the relevant actors for *industry* praise.[24] Consumers have a vested interest in liking expensive things that they have purchased. We are skeptical that consumers in this situation (anonymous online statements) represent industry praise. Patent Owner offers no analysis in support of its position.

Patent Owner next alleges praise in "technical journals, including TechShop magazine." Resp. 55–56 (citing Ex. 2012). However, Exhibit 2012 is merely a screen capture of a website. Even so, this is by no means a "technical journal[]," but rather a conduit for paid product placements. Ex. 2012, 2 (site disclaimer stating: "We are provided tools free of charge, however, we receive compensation for some videos we produce. Tool Showcase videos are not reviews and the descriptions and specifications of the products are provided by the manufacturer.").

---

[23] We view anonymous reviews with heavy skepticism. We have not been presented with evidence that makes us comfortable with taking these at face value. Even if we assume that each review is offered by a unique individual who actually purchased and used the product, it is common knowledge that many companies compensate reviewers for positive reviews or combine reviews of similar products. *See, e.g.*, Tr. 50:4–5 (Patent Owner's counsel responding to a question on this topic: "You don't know whether my client or my client's reseller is out there trying to put this in other people's lips"); Ex. 2012, 2 (a video "review" website disclosing that they received tools for free or for compensation and that the "reviews" are provided by the manufacturer).

[24] Consumer's preference is directly handled in the commercial success category, however.

Patent Owner then alleges praise in reviews on "YouTube from industry insiders." Resp. 56 (citing Exs. 2013–2018, 2049–2054). Exhibits 2013 and 2049 are the "Tool Showcase" that is the same entity as the alleged "technical journal[]" of Exhibit 2012. We find that it is also a paid product placement and does not credibly represent industry praise.

Exhibits 2015 and 2051 are offered as a YouTube video describing Matco Hyper-Step drill bits by a YouTube personality known as Flat Rate Master. In the video, Flat Rate Master alleges that another individual, known as Bam Bam, got his tool stuck in an engine block and was able to use a Matco Hyper-Step drill bit to get it out. Flat Rate Master alleges that Bam Bam found the drill bit to go "through it like butter." For his part, however, Flat Rate Master characterized the drill bit as "simple." Flat Rate Master made clear that his video was not sponsored by Matco.[25]

Exhibit 2052 is a video entitled "Matco Hyper-Step Drill Bits Have No Chill," and depicts an unidentified individual randomly drilling holes in things. Ex. 2016; Ex. 2036 ¶¶ 46–47. No words are spoken.

Exhibits 2050, 2053, 2054 have previously been excluded. Paper 41.

Reviewing the evidence offered for industry praise, we find disjointed clips of dubious relevance and reliability, paired with the lack of any meaningful explanation from Patent Owner. When asked at oral hearing about what we should do with its evidence, Patent Owner acknowledged that: "you would be entitled to take those tertiary statements with a grain of salt. You don't know whether my client or my client's reseller is out there trying to put this in other people's lips. I don't have a problem with that at

---

[25] This reinforces our earlier point that marketing promotions masquerading as reviews or opinions are commonplace in the industry.

all." Tr. 49:5–50:25. We place little-to-no persuasive value on Patent Owner's offerings for industry praise.

d) Commercial Success

Patent Owner asserts that its products have been commercially successful, and that Petitioner's competing products have also been commercially successful. Resp. 56–57. In an effort to correlate the success with the claimed features, Patent Owner asserts that "Astro and Matco both advertise the patented features (and performance deriving therefrom)." *Id.* at 57–58 (citing Exs. 2011, 2041–2046). We have reviewed these exhibits and are not persuaded that the commercial success can be attributed to the claimed invention. For example, the advertising materials tout that the Hyper-Step is innovative because "the multi-steps tip acts like a step drill, allowing for laser like holes through sheet metal and prevents walking on curved services." Ex. 2041, 1. This sounds like Bannister: "the central grinding unit 13 and each succeeding grinding unit formed by the stepped cutting edges, forms a pilot for the succeeding larger drill unit, so that holes drilled with my improved drill are perfectly round and straight, and of uniform section." Ex. 1006, p.2, 2:49–55; *see also id.* at p.1, 2:15–20 (identifying the problem of drill walking which is solved by using a series of drilling units, i.e., presenting a small initial drilling surface). Thus, even if we were to credit the Hyper-Step as having commercial success because, e.g., it can charge a price premium (e.g., Sur-reply 22–26),[26] the evidence

[26] We need not decide whether many of Patent Owner's arguments here or elsewhere in its Sur-reply are improper new arguments because our finding that there is insufficient nexus means that the case does not turn on these potentially new arguments.

that Patent Owner is offering suggests that the success is based on nothing more than features offered by Bannister, or unclaimed features.

e) Long-Felt Need

Patent Owner asserts that, historically, it has been necessary to use a pilot hole with a smaller diameter drill bit before drilling a larger hole, creating a two-step process. Resp. 58–59. Patent Owner asserts that no one had thought to combine a plurality of cutting blade groups on the conical portion of the twist drill. *Id.* at 58–60. However, we find these statements contravened by the prior art before us. The problem that Patent Owner identifies is almost verbatim recited as the problem identified in Bannister, a drill from 1938. Ex. 1006, p.1, 1:55–2:11. Bannister offered a solution to the problem by creating a plurality of cutting blade groups on the conical portion of the twist drill. *Id.* at Fig. 1; p.1, 2:32–35 ("In accordance with my invention, I provide a drill in which the beforementioned difficulties are overcome. I grind the drill so that the point presents a series of drilling units."); p.2, 2:49–56 (also referring to the drilling units as "stepped cutting edges"). Accordingly, the idea of providing steps on a twist drill bit has long been known. *See also* Ex. 1017, 25 (a textbook explaining that "[s]tep drills can frequently be made by grinding down and stepping conventional drills"). We find no compelling evidence of long-felt need for the claimed invention.

f) Conclusions for Objective Indicia

The following is a summary of our findings and conclusions from above regarding objective indicia of non-obviousness. Patent Owner has not established a nexus between the claimed invention and the licensed products it offers as evidence of non-obviousness. Instead, the evidence offered is

linked to features regarding the stepped configuration itself, which is shown in the prior art and offers the advantages Patent Owner claims for itself. The evidence offered for copying merely shows competitors working to introduce or advertise a competing product. The evidence offered for industry praise is equivocal at best and does not come from the types of sources that would generally indicate that a person of ordinary skill in the art would have considered the claimed invention obvious. Much of the praise, as it were, simply repeats features that were known in the prior art such as Bannister. Patent Owner's evidence for commercial success likewise appears to hinge upon features and benefits touted by Bannister. Similarly, Patent Owner's evidence about long-felt need ignores the fact that Bannister offers a solution to these same problems. In sum, the evidence offers little in the way to showing that the subject matter of the claims are non-obvious over other step-tip references like Bannister.

4. Conclusion for Bannister, Zhou, Welty, and Korb Ground

Bannister discloses most of the claimed features and shows the step-tip drill bits that address most of the problems that Patent Owner alleges are solved by its claimed invention. Ex. 1006, p.1, 1:5–11 (generates less heat; drills in one operation), 2:1–35 (design overcomes need for "punch mark" or using multiple drills), p.2, 2:45–54 (stepped cutting surfaces). Several steps in Bannister, however, are perpendicular to the rotational axis of the drill bit, rather than angled, i.e., conical, and thus Petitioner proposes to modify perpendicular steps to be conical, as taught in Zhou and Welty. Pet. 68. This modification effectively brings Bannister back into line with how virtually every other drill bit tip is formed. *See id.* at 68–70. This ground also included a further modification, to make the angular positions of the

cutting tips of Bannister's steps to form a spiral. *Id.* at 84–85. Bannister's steps are in a straight line in terms of their angular position. Korb teaches that cutting tips could be straight or spiral. *Id.* Korb states that the spiral arrangement is more effective have reduced every moving swarf. *Id.* at 85. Thus, Petitioner contends that it would have been obvious to include this known arrangement to assist in providing its known benefit: improved swarf removal. *Id.*

Patent Owner's evidence of non-obviousness is directed to showing how the licensed products include beneficial features already known in the art, such as self-centering (no need for a pilot hole) and reduced heat generation (durability). To the extent Patent Owner believes that its success lies in providing a stepped twist drill, Bannister already does this. In sum, the allegedly unique features of the '583 patent are features already present in Bannister, not a point of novelty allegedly arising from a combination of features not present in the prior art. *Fox Factory*, 944 F.3d at 1378 (stating that for patents claiming combinations of prior art features, a patentee must show that the secondary considerations evidence is "attributable to the claimed combination of [prior art features], as opposed to, for example, prior art features in isolation or unclaimed features"). Weighing the evidence of obviousness against the evidence of non-obviousness, we determine that Petitioner has shown by a preponderance of the evidence that the subject matter of claims 13, 18, and 22 would have been obvious in view of Bannister, Zhou, Welty, and Korb.

5. A Note on the Applicability of Objective Indicia in This Ground to Other Grounds

Patent Owner only presents arguments of objective indicia with respect to the third ground. *See* Resp. i (noting the heading structure, which is reflected in the brief). We noted a similar choice in our Decision on Institution. Dec. on Inst. 24 ("In this [third] ground, however, Patent Owner offers what appears to be arguments regarding objective indicia of non-obviousness."). Patent Owner belatedly tries to take back this choice in its Sur-reply. Sur-reply 15. This is too late. However, for sake of argument we note that Patent Owner's arguments of secondary consideration with respect to the third ground would not be effective even if it were shoehorned into the other two grounds. With respect to the Wang ground, the difference between Wang and the claimed invention is axial relief, something that both parties agree is very well-known. In contrast, Patent Owner's arguments on secondary considerations are focused on the stepped tip arrangement, not axial relief. Thus, the arguments and evidence on secondary considerations would be insufficient to move the needle relative to the strong case of obviousness in the Wang ground. With respect to the Bannister-Zhou-Welty ground, the difference lies in having conical step surfaces instead of perpendicular step surfaces. This again is an exceedingly well-known structure, and again we are left to conclude that the evidence of objective indicia of non-obviousness, largely tied to the step features already shown in Bannister, are insufficient when viewed alongside an extremely strong case of obviousness.

III. CONCLUSION

We find that Petitioner has established by a preponderance of the evidence that claims 1, 2, 5, 7, 8, 12–15, 18, 19, and 22 of the '583 patent would have been obvious.[27]

In summary:

Claim(s)	35 U.S.C. §	Reference(s)/ Basis	Claims Shown Unpatentable	Claims Not Shown Unpatentable
1, 2, 5, 7, 8, 12–15, 18, 19, 22	103	Wang, Gentry, Durfee	1, 2, 5, 7, 8, 12–15, 18, 19, 22	
1, 2, 5, 7, 8, 12, 14, 15, 19	103	Bannister, Zhou, Welty	1, 2, 5, 7, 8, 12, 14, 15, 19	
13, 18, 22	103	Bannister, Zhou, Welty, Korb	13, 18, 22	
Overall Outcome			1, 2, 5, 7, 8, 12–15, 18, 19, 22	

[27] Should Patent Owner wish to pursue amendment of the challenged claims in a reissue or reexamination proceeding subsequent to the issuance of this decision, we draw Patent Owner's attention to the April 2019 *Notice Regarding Options for Amendments by Patent Owner Through Reissue or Reexamination During a Pending AIA Trial Proceeding*. *See* 84 Fed. Reg. 16,654 (Apr. 22, 2019). If Patent Owner chooses to file a reissue application or a request for reexamination of the challenged patent, we remind Patent Owner of its continuing obligation to notify the Board of any such related matters in updated mandatory notices. *See* 37 C.F.R. §§ 42.8(a)(3), (b)(2).

IV. MOTION TO EXCLUDE

We decide Petitioner's Motion to Exclude contemporaneously with our Final Written Decision.

A. Exhibit 2036 ¶¶ 37–55

Exhibit 2036 is the corrected declaration of David Fisher. Mr. Fisher is the president of Astro Pneumatic Tool Co., a distributor for tools sold by Tsteigen. Ex. 2036 ¶ 1. Tsteigen, in turn, is a company part owned by Patent Owner. Ex. 2035 ¶ 2. Petitioner asserts that Exhibit 2036 "contains statements made outside the course of this proceeding that Patent Owner relies upon for their truth, and [] is therefore hearsay." Mot. Excl. 1. In particular, Petitioner asserts that paragraphs 37 through 55 of Exhibit 2036 are directed towards Patent Owner's arguments for industry praise. *Id.* at 1–3. Petitioner asserts that these paragraphs contain out-of-court statements by third parties offered for their truth. *Id.*

Patent Owner argues that Petitioner's hearsay argument is unfounded because Exhibit 2036 is testimony taken from this proceeding and are the statements of Mr. Fisher himself. Opp. Mot. Excl. 2. Patent Owner asserts that Petitioner is actually trying to attack the various exhibits cited by Mr. Fisher, but that Petitioner had missed its opportunity to object to this evidence directly. *Id.* at 2–3.

We do not exclude these portions of Mr. Fisher's declaration. These paragraphs step through and provide Mr. Fisher's commentary on a number of websites, videos, and other out-of-court statements made by third parties. If Petitioner wished to exclude the various out-of-court statements made by these third parties in the evidence cited by Mr. Fisher, then it needed to object to those exhibits and seek to exclude them. The exhibits were

submitted prior to our Decision on Institution, and thus Petitioner had to have objected to them within 10 days of institution. 37 C.F.R. § 42.64(b)(1). Petitioner had not done so.

As to Petitioner's larger point, that Mr. Fisher is a lay witness being offered as a conduit for hearsay (e.g., Reply Mot. Excl. 1–4), we note that even though Petitioner has missed its opportunity to exclude the hearsay, we are still able to weigh the persuasiveness of his testimony and the evidence cited therein.

B. Exhibit 2036 ¶¶ 33, 34, 36

We do not exclude paragraphs 33, 34, and 36 of Mr. Fisher's declaration for similar reasons as paragraphs 37–55.

C. Exhibit 2034 ¶¶ 142–148; Exhibits 2094–2097

Exhibit 2034 is the declaration of Patent Owner's expert, Dr. Endres. Paragraphs 108–120 have already been stricken. Paper 41. Paragraphs 142 through 148 include statements by Dr. Endres that he has reviewed and agrees with the claim charts shown in Exhibits 2094 through 2097, offered to show that third parties copied the claimed invention. Petitioner asserts that Dr. Endres lacks firsthand personal knowledge and cannot lay the proper foundation to establish that the drill bits depicted in the charts are those bits. Mot. Excl. 6. Petitioner asserts that Exhibits 2094 through 2097 are out-of-court statements authored by unknown persons being offered for their truth. *Id.*; *see also* Reply Mot. Excl. 6–7.

Patent Owner argues that Petitioner never objected to Exhibits 2094 through 2097 on hearsay grounds. Opp. Mot. Excl. 6–7. Patent Owner is correct. *See* Paper 33, 13 (objecting to these exhibits under FRE 401, 402, and 403). However, Petitioner objected to Exhibit 2034 under FRE 702,

703, and 37 CFR § 42.65. *Id.* at 2. Federal Rule of Evidence 703 states that an expert may base an opinion on facts or data that the expert has been aware of or personally observed. Rule 42.65 states that expert testimony must "disclose the underlying facts or data on which the opinion is based." As near as we can tell, Dr. Endres had physical copies of the various drill bits to compare to the claim charts that were given to him. Ex. 2034 ¶ 142 (Dr. Endres testifying that "I also analyzed the Steel Vision Stepped Tip drill bit and the VIM HSSC29 drill bits and the 'third-party copying' patent claims charts."); Tr. 46:20–24 (admitting that the claim charts were prepared by counsel but that Dr. Endres was provided the drill bits themselves).[28] Dr. Endres "agree[d]" with the claim charts based on his apparent possession of the drill bits shown in the claim charts. Ex. 2034 ¶¶ 142 (Dr. Endres stating he "analyzed the . . . drill bit"), 143 (Dr. Endres stating he "closely evaluated and agree[s] with" the claim charts). Accordingly, we will not exclude this testimony.

---

[28] In addition, Petitioner was in the position to obtain testimony from Dr. Endres as to whether he actually possessed physical copies, but Petitioner has not directed our attention to such evidence. *Cf.* Sur-reply Add'm 1 (Patent Owner asserting that Petitioner omitted testimony where it did question Dr. Endres about having personally examined drill bit samples, which he confirmed). We note that had Patent Owner did not object to Petitioner having filed excerpted transcripts, but we of the opinion that Petitioner should have produced the entire transcript. Although 37 C.F.R. § 42.53(f)(7) states that "the proponent of the testimony must arrange for providing a copy of the transcript" rather than providing a *complete* copy, we believe that the intent of the Rule is for a complete copy to be filed.

D. Exhibits 2047, 2055–2061

Petitioner asserts that Exhibits 2047, and 2055 through 2061 are based on out-of-court statements being offered by Patent Owner for the truth of the matter asserted. Mot. Excl. 7–8; Reply Mot. Excl. 7–11. These exhibits each include out-of-court statements by a third party regarding Matco drill bits. Matco sells drill bits under license from Astro, under license from Tsteigen, under license from Patent Owner. Ex. 2035 ¶¶ 3–5.

Patent Owner argues that Exhibit 2047 "is relevant to show that certain conversations took place—not for the truth of the assertions." Opp. Mot. Excl. 9. As to the remaining exhibits, Patent Owner argues that they are "contemporaneous statements by [a third party] and [Petitioner] concerning their real time observations, impressions of, and reactions to [Patent Owner's] patented drill bits." *Id.* Patent Owner asserts that several statements in the exhibits are made by Petitioner "which are not hearsay." *Id.* Patent Owner also asserts, without explanation, that "several hearsay exceptions apply." *Id.* at 10.

1. Exhibit 2047

As to Exhibit 2047, Petitioner replies that Patent Owner is using the exhibit to show copying, not merely to show that certain conversations took place. Reply Mot. Excl. 8. We do not exclude Exhibit 2047 for the purpose of corroborating the fact that a third party and one of Patent Owner's licensees engaged in discussions. *See* Ex. 2036 ¶¶ 25–26 (stating that negotiations took place and citing Ex. 2047 in support).

2. Exhibits 2055–2057, 2061

We exclude the emails of Exhibits 2055 through 2057 and 2061. They are directed towards the out-of-court statements of a third party. The

statements are being used for the truth of the matter asserted; Patent Owner repeatedly uses the statements to argue that the third party had a positive view of Matco or Astro drill bits. *See generally* Resp. 50–55; *see, e.g.*, *id.* at 50 (asserting that a third-party sales representative "ha[s] never seen anything like them"), 51 (asserting that the third-party described Astro's drill bits as the "latest revolution" and having various positive attributes). The evidence is not offered merely for showing the third party's awareness of the drill bits but rather their subjective opinion about them. We find that Exhibits 2055–2057 and 2061 are hearsay.

Further, we are not persuaded that any exceptions apply. Patent Owner never sought the third party's testimony in this proceeding. Patent Owner argues that Petitioner was involved in many of the conversations in some of the exhibits, but Patent Owner is not relying on the statements of Petitioner. *See, e.g.*, Reply Mot. Excl. 8–10 (highlighting how Patent Owner is using the documents to show a third party's beliefs); Resp. 50–51. Patent Owner also argues that these are present sense impressions or records of regularly conducted activities (Opp. Mot. Excl. 1), but does not provide any analysis of why these exceptions should apply. The emails do not strike us as present sense impressions but rather conversations during the course of business. In addition, although emails are common in the course of business, we do not understand this hearsay exception to be directed towards email conversations, but rather business records.

3. Exhibit 2058

Exhibit 2058 is a product catalog featuring cutting tools offered by a third party. Petitioner does not specifically explain why this document should be excluded. Patent Owner points out that it is a published document

and should not be excluded. Opp. Mot. Excl. 10. We agree with Patent Owner, and do not exclude Exhibit 2058.

4. Exhibit 2059

Exhibit 2059 is a testing document produced by Astro. Ex. 2059 (noting the header). Petitioner argues that Patent Owner specifically cites to this document as evidence of beliefs held by a third party (different from Astro). Mot. Excl. 7. Patent Owner asserts that these are "observations of testing." Opp. Mot. Excl. 10. We note that this document was produced by Astro, a party with ties to Patent Owner. Notwithstanding, Patent Owner attempts to attribute the statements in this document to another third party (not Astro). We agree with Petitioner that Patent Owner is attempting to use these statements for the truth of the matter asserted. *See, e.g.*, Resp. 50–51 (alleging that the third party "was [] impressed with their performance" and citing to Exhibit 2059 as evidence of "initial testing documents"). Accordingly, Patent Owner is not only attempting to use these documents for the truth of the matter asserted, but Patent Owner is attempting to attribute them to a party different from the party that made the statements. We do not find any exceptions to the hearsay rule to be applicable here. In addition, Exhibit 2059, as offered, is misleading and confusing. We exclude Exhibit 2059.

5. Exhibit 2060

Exhibit 2060 appears to contain a series of slides and notes, as would be used in a presentation. The document appears to be that of a third party. Patent Owner asserts that the content in this exhibit demonstrates the third party's "strong desire to copy" the claimed invention. *See, e.g.*, Resp. 51, 59. Assuming they are what they are alleged to be, then these are out-of-

court statements by a third party being used to prove the truth of the matter asserted—that an employee of the third party thought highly of Patent Owner's licensed drill bits. We are not persuaded by Patent Owner's passing arguments that these represent "real-time observations, impressions of, and reactions to" the claimed invention. Opp. Mot. Excl. 9–10. We exclude Exhibit 2060.

V. ORDER

In consideration of the foregoing, it is hereby:

ORDERED that the record show that Petitioner has demonstrated by a preponderance of the evidence that claims 1, 2, 5, 7, 8, 12–15, 18, 19, and 22 of U.S. Patent No. 11,007,583 are unpatentable;

FURTHER ORDERED that Petitioner's Motion to Exclude Exhibits 2094–2097, 2047, and 2058, as well as portions of Exhibit 2034 and 2036, is denied;

FURTHER ORDERED that Petitioner's Motion to Exclude Exhibits 2055–2057 and 2059–2061 is granted; and

FURTHER ORDERED that, because this is a Final Written Decision, parties to the proceeding seeking judicial review of the decision must comply with the notice and service requirements of 37 C.F.R. § 90.2.

FOR PETITIONER:

John Vandenburgh
Iain McIntyre
Mitchell Williams
Saukshmya Trichi
Katherine Chen
CARLSON CASPERS VANDENBURGH & LINDQUIST, P.A.
dvandenburgh@carlsoncaspers.com
imcintyre@carlsoncaspers.com
mwilliams@carlsoncaspers.com
strichi@carlsoncaspers.com
kchen@carlsoncaspers.com

FOR PATENT OWNER:

Kelly W. Cunningham
ERVIN COHEN & JESSUP LLP
kcunningham@ecjlaw.com

Aaron P. McGushion
MCGUSHION PATENT
aaron@mcgushion.com