Gun Drilling

Having enough coolant flow to gun drill with a CNC machine

Gun drilling was initially developed for drilling dependable, uniform holes for rifle and gun barrels. Still used in the manufacture of armaments, the process of gun drilling, also called deep hole drilling, is used in many other industries: aerospace, construction, medical, automotive, manufacturing, hydraulics, military, energy, oil and gas exploration, and plastic injection molds.

Deep hole drilling refers to holes of depths at least three times their diameter. Holes can be drilled to practically any length, as limited by its machine and drill design and shank rigidity. Likewise, a variety of materials are used with this process from titanium, steel, and other metals to ceramics, graphite, plastics, and wood.

Advantages of gun drilling

Compared to other drilling methods, gun drilling offers:

- deep, accurate holes in a single pass
- the best method when very precise roundness and/or straightness is required
- guide pads burnish the hole, often eliminating secondary finishing
- reduced cost and labor time
- gun drill tips can be reground for increased tool life

Gun drilling process

Precision is achieved in deep hole drilling with the use of:

- specially engineered shank shapes
- carbide cutting edges
- internally-fed coolant systems

A hole through the drill delivers coolant that is sent to the cutting edge to lubricate the point of contact and cleanly flush chips through a v-shaped groove or flute (also known as single-fluted drilling). Guides on the tool head burnish the hole while drilling, resulting in a precise, round hole and desired diameter. This internal coolant/external exhaust feature distinguishes gun drilling from other deep hole drilling methods with its accuracy and precision. Ordinary twist drills do not compare to the precision of gun drilling.

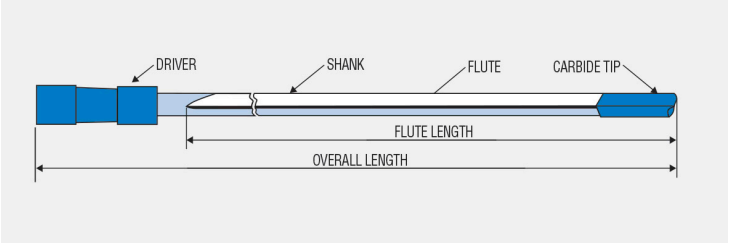

Achieving precision

Factors that influence the quality and accuracy of the hole drilled by a gun drill include:

- pressure
- fluid volume
- speeds and feeds
- lubricity and fluid viscosity
- drill condition
- shank sharpness

When it comes to moving chips and swarf, coolant volume is key. The rule of thumb is 1.5 GPM/10’ of chip movement in a milling operation.

Milling and CNC machines

The same concept holds true with gun drilling, it is the volume not the pressure that moves the chips.

With new mill designs, gun drilling is becoming more common on nondedicated equipment. Dedicated gun drilling machines typically use straight oils. With the use of traditional CNCs for gun drilling, several factors need to be addressed for good tool life and surface finish.

Milling machines are typically equipped with high-pressure coolant systems. It does not guarantee that the volume needed for gun drilling operations will be delivered to the point-of-cut. Pressure does not ensure volume. With either a CNC or milling machine, to attain desired volume and good results, calculations and adjustments must be made.

©2014-2023 Master Fluid Solutions | Master Fluid Solutions® is a registered trademark of Master Chemical Corporation d/b/a Master Fluid Solutions.

Wang Ex. 2104
IPR2023-00473 and IPR2023-00474

Gun Drilling

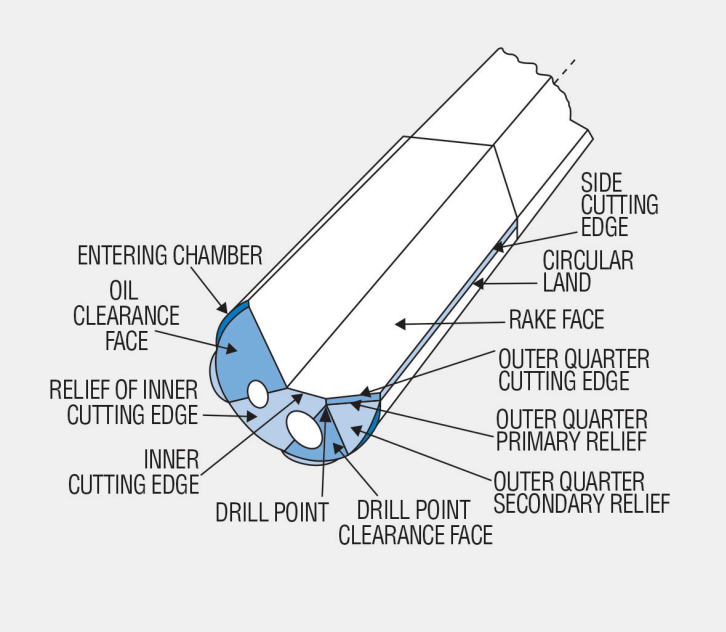

The gun drill
The single hole in a gun drill is typically about ¼ of the drill diameter. Increased coolant flow can be achieved with multiple- or kidney-shaped holes in the drill. If this is the case, be sure to keep it in mind when calculating flow rate.

To calculate flow rate for water-based gun drilling, use this rule of thumb: for every revolution of the drill bit, use enough coolant to fill the volume of the drilled hole. The following example shows how those calculations are made.

Volume
For the volume of the finished hole in gallons:
$V = [0.785 \times dia^2 \times depth\ (inches)] \div 231$
Volume of fluid needed:
Flow Rate = V x RPM of bit
Example:
3/8" hole running 8" deep @ 300 RPM
$[(0.785 \times (.375)^2 \times 8) \div 231] \times 300 = 1.1$ GPM (gal/min)

Flow rate
Flow rate, calculated as gallons/minute
$GPM = 30 \times (\text{dia of nozzle})^2 \times \sqrt{\text{nozzle pressure}}$
$GPM = 30d^2 \sqrt{np}$

In actuality flow rate will be less due to friction loss.
Example:
A system that delivers 1,000 psi of coolant through a gun drill with a nozzle 0.100" in diameter
$GPM = 30 \times (0.1)^2 \times \sqrt{1000}$
GPM = 9.5 GPM (gal/min)

Pressure
The coolant supply in high-pressure systems tend to be pressure limiting for safety reasons. A problem occurs when there is a blockage in the hole and back pressure increases. For protection to the system and operators, when the back pressure builds up, the pump automatically reduces the flow. So, just when the operation needs More volume to move the blockage, it is cut back, making the problem worse. Avoid this problem by having excess volume available as needed.

Feed rates
Feed rates need to be adjusted to get a good, short chip that can easily flow through the drill. Long, stringy chips can create blockages and become wrapped around the bit. Sometimes the feed rate needs to be increased to create a higher work-hardening rate, which produces a smaller chip.

Lubricity and Viscosity
Proper lubricity is a key factor in achieving precision gun drilling. The higher the viscosity of the fluid, the more chips the fluid can move. An oil can move more chips than a water-soluble fluid at the same flow rate. When using an oil the flow rate is lower than the above recommendation. Higher-viscosity fluids take considerably more horsepower to get the same flow as water-solubles.

TRIM® OM 287, TRIM® OG210, and TRIM® OE310 NS are excellent straight oils for gun drilling on a dedicated milling machine.

For gun drilling operations on CNC milling machines, a full soluble oil/emulsion coolant should be used. Master Fluid Solutions recommends TRIM® E923 or TRIM® E925.

©2014-2023 Master Fluid Solutions | Master Fluid Solutions® is a registered trademark of Master Chemical Corporation d/b/a Master Fluid Solutions.

Wang Ex. 2104
IPR2023-00473 and IPR2023-00474