Trials@uspto.gov
571-272-7822

Paper 12
Date: August 15, 2023

UNITED STATES PATENT AND TRADEMARK OFFICE

BEFORE THE PATENT TRIAL AND APPEAL BOARD

SAMSUNG ELECTRONICS CO., LTD., and
SAMSUNG ELECTRONICS AMERICA, INC.,
Petitioner,

v.

POLARIS POWERLED TECHNOLOGIES, LLC,
Patent Owner.

IPR2023-00484
Patent 8,217,887 B2

Before MICHELLE N. WORMMEESTER, JON M. JURGOVAN, and KARA L. SZPONDOWSKI, *Administrative Patent Judges.*

SZPONDOWSKI, *Administrative Patent Judge*.

DECISION
Denying Institution of *Inter Partes* Review
35 U.S.C. § 314

I. INTRODUCTION

Samsung Electronics Co., Ltd. and Samsung Electronics America, Inc.[1] (collectively "Petitioner") filed a Petition (Paper 1, "Pet.") to institute an *inter partes* review of claims 1–21 of U.S. Patent 8,217,887 B2, issued on July 10, 2012 (Ex. 1001, "the '887 patent"). Polaris PowerLED Technologies, LLC ("Patent Owner") filed a Preliminary Response. (Paper 8, "Prelim. Resp."). With our authorization, Petitioner filed a Preliminary Reply (Paper 9, "Reply") and Patent Owner filed a Preliminary Sur-reply (Paper 10, "Sur-reply").

We have jurisdiction under 35 U.S.C. § 6. Institution of an *inter partes* review is authorized when "the information presented in the petition . . . and any response . . . shows that there is a reasonable likelihood that the petitioner would prevail with respect to at least 1 of the claims challenged in the petition." 35 U.S.C. § 314(a). Based on the current record, and for the reasons explained below, we determine that Petitioner has not established a reasonable likelihood that it would prevail with respect to at least one challenged claim. Accordingly, we decline to institute *inter partes* review.

[1] In the Introduction section of the Petition, Petitioner also identifies Samsung Display Co., Ltd. Pet. 1. However, Samsung Display Co., Ltd. is not included in the caption or identified as a real party in interest, and Petitioner has only filed Powers of Attorney for Samsung Electronics America, Inc. and Samsung Electronics Co., Ltd. Pet. 2, Papers 2, 3. Given the foregoing, we assume that the inclusion of Samsung Display Co., Ltd. in the Introduction is in error. If our assumption is incorrect, Petitioner is requested to advise the Board.

II. BACKGROUND

A. Real Parties in Interest

Petitioner identifies Samsung Electronics Co., Ltd. and Samsung Electronics America, Inc. as real parties in interest. Pet. 2. Patent Owner identifies itself as the real party in interest. Paper 6, 1.

B. Related Matters

Petitioner and Patent Owner identify *Polaris PowerLED Technologies, LLC v. Samsung Elecs. Co., Ltd., et al.*, No. 2:22-cv-00469 (E.D. Tex). Pet. 2; Paper 6, 1. Patent Owner also identifies IPR2023-00479, where Petitioner filed a petition for *inter partes* review of U.S. Patent No. 8,740,456. Paper 6, 1.

C. The '887 Patent (Ex. 1001)

The '887 patent is titled "System and Method for Backlight Control for an Electronic Display" and generally relates to "controlling the intensity of light emitting diodes (LEDs) in the backlights of electronic displays." Ex. 1001, code (54), 1:7–8.

In describing the background of the invention, the '887 patent states that pulse-width modulation (PWM) is often used to control the intensity of the LED backlight. Ex. 1001, 1:47–48. The '887 patent explains that:

> PWM of a signal or power source involves the modulation of its duty cycle, to control the amount of power sent to a load. PWM uses a square wave whose duty cycle is modulated resulting in the variation of the average value of the waveform. PWM alternates between a high voltage that causes the emission of bright light and a low voltage that does not cause the emission of light, instead of providing a continuous voltage to the LED for causing a continuous output of a certain intensity of light.

In PWM, the LED switches quickly enough that the human

> eye does not perceive the on and off states, but instead perceives an intensity of light that depends on the duration of the on state. Presently, the adjustments to the backlighting are made independently of the images being displayed by the pixel circuitry. For example, a laptop is typically factory set to provide only two different levels of brightness: a higher level of brightness during the full power mode and a lower level of brightness during the battery power mode. Some prior art also discloses adjusting the backlight intensity at the beginning of each frame (see U.S. Pat. No. 7,138,974).

Ex. 1001, 1:48–67. The '887 patent states that "[t]his frame-by-frame backlight control of the prior art, in which the backlight is adjusted only once for each frame, has several deficiencies," which "[t]he apparatus and techniques of the present invention overcome." *Id.* at 2:21–23, 29–30.

The '887 patent describes that "the intensity of the backlight is adjusted multiple times within the duration of a frame," which "provides the ability to ma[k]e a gradual transition between the luminosities of two successive frames, for example, from a bright frame to a dark frame." *Id.* at 2:37–42. "In another aspect of the present invention, the display is divided into a number of tiles or sections and the backlighting for each tile is separately controlled," which "provides for superior contrast control across the display." *Id.* at 2:42–46.

Figure 2, which illustrates an example backlighting system, is reproduced below:

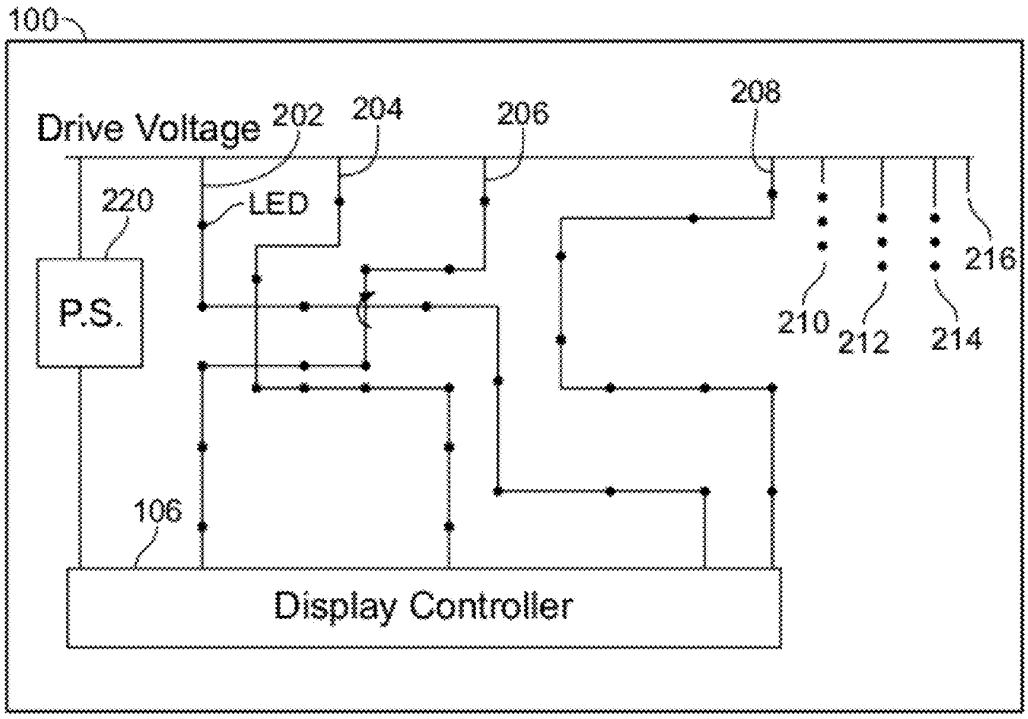

FIG. 2

Figure 2, above, illustrates an exemplary backlighting system 104 having eight LED strings 202, 204, 206, 208, 210, 212, 214, and 216, display controller 106, and power supply 220. Ex. 1001, 3:40–51. Display controller 106 receives a feedback signal from the LED strings and uses it to control the power supply 220 that provides the drive voltage for the LED strings. *Id.* at 3:46–51.

Display controller 106 uses HSYNC and VSYNC signals, which are essentially clock signals, to control the pixel circuitry 102. Ex. 1001, 3:12–14, 59–60, 4:7–8. "Each frame includes a plurality of scan lines, and each scan line includes a plurality of pixels." *Id.* at 3:63–64. The HSYNC signal indicates the start of a scan line, and the VSYNC indicates the start of a frame. *Id.* at 4:4–6.

Figure 3, reproduced below, illustrates an exemplary functional block diagram for display controller 106.

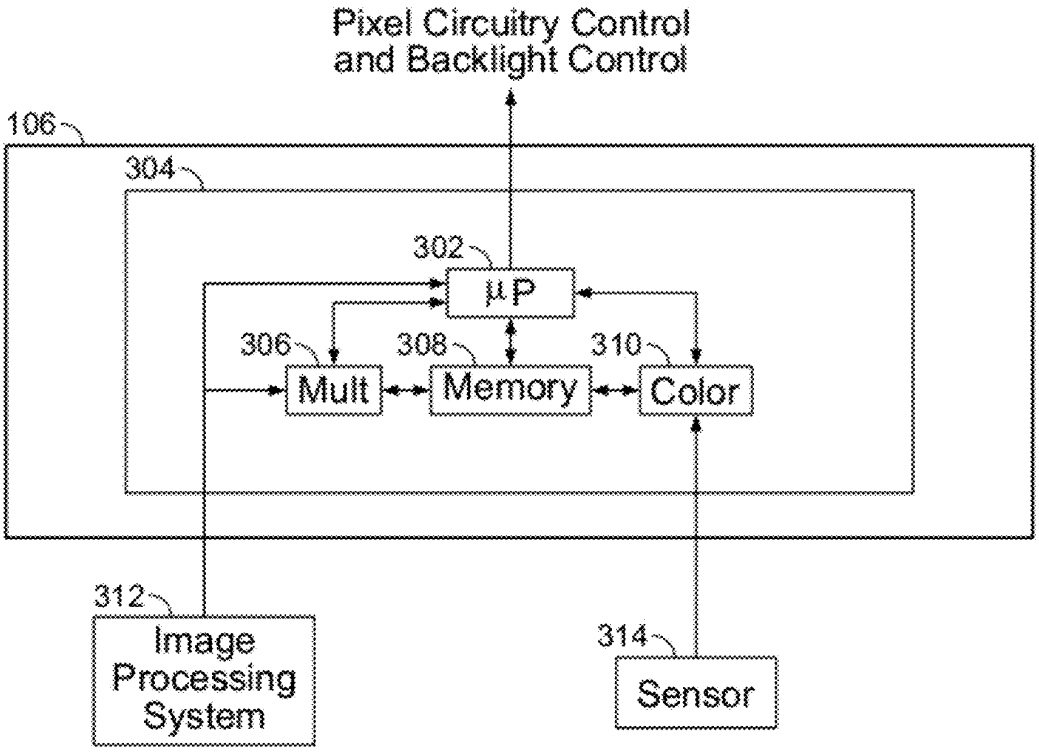

FIG. 3

Figure 3, above, depicts display controller 106 which includes microcomputer 304 that includes microprocessor 302 coupled to multiplication circuitry 306, memory 308, and color circuitry 310. Ex. 1001, 4:26–31. Image processing system 312 provides the VSYNC signal to multiplier circuitry 306, either directly or by way of microprocessor 302. *Id.* at 4:52–55. Multiplier circuitry 306 generates a clock signal (the backlight control clock) that has a frequency that is a multiple of the VSYNC signal frequency. *Id.* at 4:57–59. Microprocessor 302 uses the backlight control clock to control LED strings 202–216 of backlight circuitry 104. *Id.* at 5:5–6. "Specifically, the microprocessor 302 adjusts the luminosities of the

strings 202–216 at the frequency of the backlight control clock." *Id.* at 5:7–9. This is further explained as follows:

> The luminosities of the strings **202–216** are adjusted by changing the drive voltages and drive currents of the strings 202–216. By way of example, if the backlight control clock has twice the frequency of the VSYNC signal, the luminosities of the strings **202-216** will be adjusted twice during the rendering of each frame. Therefore, if a dark frame follows a bright frame, the microprocessor **302** can reduce the luminosity of the strings **202-216** halfway through the rendering of the bright frame, thereby causing a visually smoother transition to the dark frame by removing or reducing the visual artifacts that would have caused by the immediate switch from the bright frame to the dark frame.

Id. at 5:20–31.

D. Illustrative Claims

Among the challenged claims, claims 1, 13, and 17 are independent. Independent claim 1 is representative, and is reproduced below, with Petitioner's identifiers in brackets.

> 1. [PRE] A control circuit for an electronic display comprising:
>
> [A] a first circuitry for controlling luminosity levels of a plurality of strings of light emitting diodes (LEDs);
>
> [B] a second circuitry for controlling a plurality of pixels for displaying a plurality of image frames of a video;
>
> [Ci] the second circuitry for displaying each image frame of the plurality of image frames for a predetermined period of time, [Cii] the second circuitry configured to change a displayed image frame once every cycle of a first clock signal having a first frequency; and
>
> [Di] the first circuitry for adjusting the luminosity levels of the plurality of strings of LEDs for a plurality of times within the

> predetermined period of time, [Dii] the first circuitry configured to adjust the luminosity levels according to a second clock signal having a second frequency that is a multiple of the first frequency and is higher than the first frequency.

Ex. 1001, 6:39–55.

E. Prior Art and Asserted Challenges to Patentability

Petitioner asserts that claims 1–21 are unpatentable on the following challenges (Pet. 3):

Claims Challenged	35 U.S.C. §[2]	Basis/References
1–5, 7, 10, 11, 13–15, 18–20	103(a)	Seo[3]
1–5, 7, 10, 11, 13–15, 18–20	103(a)	Seo, Fung[4]
6, 12, 17	103(a)	Seo, Fung
8, 9, 16, 21	103(a)	Seo, Fung, Yao[5]
1–21	103(a)	Seo, Honbo[6]

In support of its proposed challenges, Petitioner relies on the Declaration of Miltiadis Hatalis, Ph.D. *See* Ex. 1002. In response, Patent Owner relies on the Declaration of Thomas L. Credelle. *See* Ex. 2001.

---

[2] Because the '887 patent issued from a patent application that was filed before March 16, 2013, patentability is governed by the version of 35 U.S.C. § 103 preceding the Leahy-Smith America Invents Act ("AIA"), Pub L. No. 112–29, 125 Stat. 284 (2011).
[3] Seo, et al., Japanese Patent Pub. 2006–18200, published Jan. 19, 2006 (Ex. 1005).
[4] Fung et al., U.S. Patent Pub. 2008/08180414, published July 31, 2008 (Ex. 1007).
[5] Yao et al., U.S. Patent Pub. 2007/0279369 A1, published Dec. 6, 2007 (Ex. 1006).
[6] Honbo, U.S. 7,952,556 B2, issued May 31, 2011 (Ex. 1008).

III. ANALYSIS

A. Legal Standards

A claim is unpatentable under 35 U.S.C. § 103(a) if "the differences between the subject matter sought to be patented and the prior art are such that the subject matter as a whole would have been obvious at the time the invention was made to a person having ordinary skill in the art to which said subject matter pertains." *KSR Int'l Co. v. Teleflex Inc.*, 550 U.S. 398, 406 (2007). The question of obviousness is resolved on the basis of underlying factual determinations, including: (1) the scope and content of the prior art; (2) any differences between the claimed subject matter and the prior art; (3) the level of skill in the art; and (4) objective evidence of nonobviousness, i.e., secondary considerations. *See Graham v. John Deere Co.*, 383 U.S. 1, 17–18 (1966).

A patent claim "is not proved obvious merely by demonstrating that each of its elements was, independently, known in the prior art." *KSR*, 550 U.S. at 418. An obviousness determination requires finding "both 'that a skilled artisan would have been motivated to combine the teachings of the prior art references to achieve the claimed invention, and that the skilled artisan would have had a reasonable expectation of success in doing so.'" *Intelligent Bio-Sys., Inc. v. Illumina Cambridge Ltd.*, 821 F.3d 1359, 1367–68 (Fed. Cir. 2016) (citation omitted); *see KSR*, 550 U.S. at 418. Further, an assertion of obviousness "cannot be sustained by mere conclusory statements; instead, there must be some articulated reasoning with some rational underpinning to support the legal conclusion of obviousness." *KSR*, 550 U.S. at 418; *In re NuVasive, Inc.*, 842 F.3d 1376,

1383 (Fed. Cir. 2016) (a finding of a motivation to combine "must be supported by a 'reasoned explanation'" (citation omitted)).

"In an [*inter partes* review], the petitioner has the burden from the onset to show with particularity why the patent it challenges is unpatentable." *Harmonic Inc. v. Avid Tech., Inc.*, 815 F.3d 1356, 1363 (Fed. Cir. 2016) (citing 35 U.S.C. § 312(a)(3)); *see also Intelligent Bio-Sys.*, 821 F.3d at 1369. Therefore, to prevail in an *inter partes* review, Petitioner must explain how the proposed combinations of prior art would have rendered the challenged claims unpatentable. At this preliminary stage, we determine whether the information presented in the Petition shows there is a reasonable likelihood that Petitioner would prevail in establishing that at least one of the challenged claims would have been obvious over the proposed combinations of prior art.

B. Level of Ordinary Skill in the Art

Petitioner asserts a person of ordinary skill in the art

> would have had a bachelor's degree in electrical engineering, computer engineering, computer science, or a related field, and at least two years of experience in the research, design, development, and/or testing of touch and/or proximity sensors, human-machine interaction and interfaces, and related firmware and software, or the equivalent, with additional education substituting for experience and vice versa.

Pet. 8 (citing Ex. 1002 ¶ 40).

Patent Owner contends that Petitioner's definition "is inconsistent with the '887 patent and the asserted art." Prelim. Resp. 4. Patent Owner argues that "Petitioner and Dr. Hatalis acknowledge [that] the '887 patent describes an 'apparatus and techniques relating to the intelligent control of a display's backlight LED strings,'" and each of the asserted prior art

references "[is] directed to liquid crystal displays (LCDs), including backlight units." *Id.* at 5. According to Patent Owner, Petitioner and Dr. Hatalis copied the definition of a person of ordinary skill in the art that was proffered in other proceedings, which is a definition that Dr. Hatalis himself does not appear to satisfy. *Id.* at 5–6.

As Patent Owner points out, Petitioner's proposed level of skill in the art bears little relation to the '887 patent. In the Reply, Petitioner argues that the obviousness arguments were addressed by Petitioner and Dr. Hatalis from the perspective of a person of ordinary skill in the art consistent with the prior art and the definition provided by Mr. Credelle. Reply 3.[7] Petitioner also states that it adopts the level of skill in the art set forth by Mr. Credelle. *Id.* at 4 (citing Ex. 2001 ¶ 24). This proposed level of skill is as follows:

> [A] person of ordinary skill in the art of the patent-in-suit would include someone who had a bachelors or graduate degree in electrical engineering or a similar discipline together with knowledge of electrical engineering, display technology, and optics, together with approximately two or three years of experience in the field relating to electrical engineering. The required levels of educational and industry experience are on a sliding scale relative to each other. For example, a person of ordinary skill could potentially have no educational degree but more industry experience or, conversely, could have something higher than an undergraduate degree with fewer years of industry experience.

---

[7] We note that Dr. Hatalis states that "In forming my opinions, I relied upon my education, knowledge, and experience, and considered the level of ordinary skill in the art as discussed below." Ex. 1002 ¶ 3. Although Petitioner argues otherwise, on its face, Dr. Hatalis's testimony indicates that he considered the person of ordinary skill in the art as set forth in paragraph 40 of his Declaration.

Ex. 2001 ¶ 24.

Neither party asserts that any dispute turns on the level of ordinary skill in the art, which appears to be in agreement. We find Patent Owner's proposal is consistent with the level of ordinary skill in the art reflected by the prior art of record, and, therefore, adopt Patent Owner's proposed level of ordinary skill in the art for purposes of this Decision. *See Okajima v. Bourdeau*, 261 F.3d 1350, 1355 (Fed. Cir. 2001).

C. Claim Construction

Petitioner contends that no terms require explicit construction, and "interprets the claims of the '887 Patent according to 37 C.F.R. § 42.100(b)." Pet. 8. Patent Owner does not offer any position on claim construction. *See generally* Prelim. Resp.

For purposes of this Decision, given that no claim terms are in controversy on the current record, we find that no express claim construction is necessary. *See Realtime Data, LLC v. Iancu*, 912 F.3d 1368, 1375 (Fed. Cir. 2019) ("The Board is required to construe 'only those terms . . . that are in controversy, and only to the extent necessary to resolve the controversy.'" (quoting *Vivid Techs., Inc. v. Am. Sci. & Eng'g, Inc.*, 200 F.3d 795, 803 (Fed. Cir. 1999))).

D. Alleged Obviousness Over Seo

Petitioner contends claims 1–5, 7, 10, 11, 13–15, and 18–20 would have been obvious over Seo. Pet. 17–49.

1. Seo (Ex. 1005)

Seo is titled "Image Display Device" and is generally directed to a "liquid crystal panel 5 that modulates light based on a video signal and a

lamp 8i that illuminates the liquid crystal panel 5 . . . using light that is a mixture of a pulse component i, which is emitted once per frame of the video signal, and a pulse component h emitted at a frequency higher than the frame frequency." Ex. 1005, codes (54), (57).

Figure 1, reproduced below, is a block diagram illustrating an example of an LCD.

FIG. 1

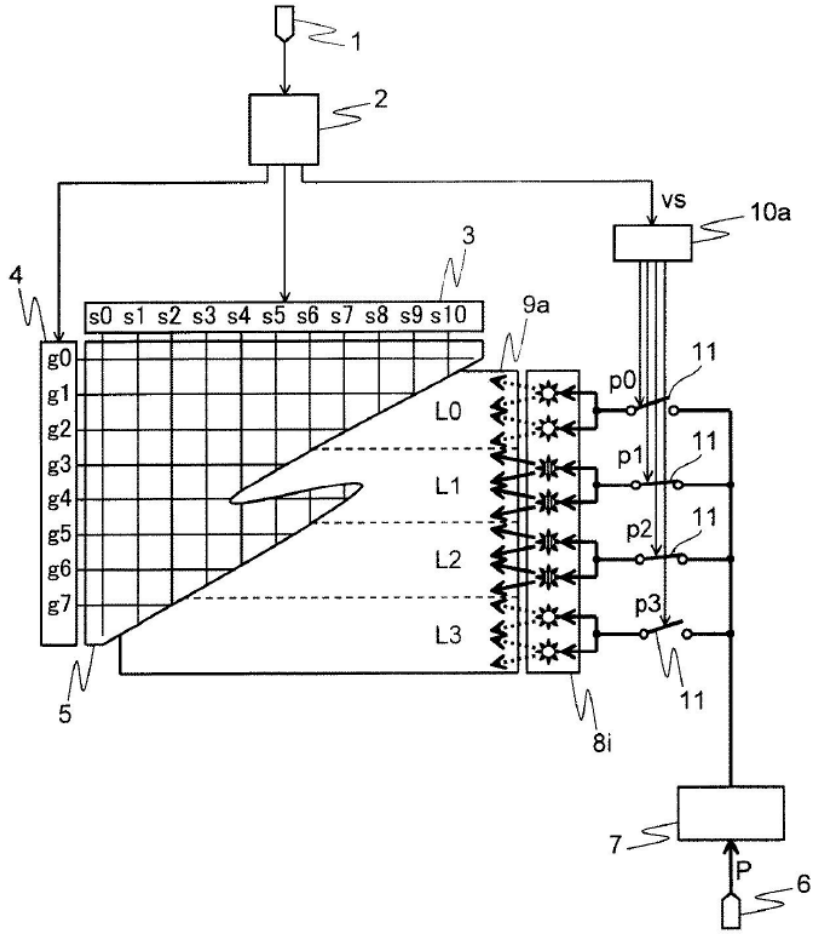

Figure 1, above, depicts control circuit 2 outputting vertical sync signal "vs" to turn ON signal generating circuit 10a, which outputs turn ON signals p0, p1, p2, and p3 to switch 11. Ex. 1005 ¶ 17. Switch 11 passes or cuts off the electric power flowing from the power supply circuit 7 to the lamp 8i

according to the signal levels of the turn ON signals p0, p1, p2, and p3. *Id.* Seo states that "[a] lamp such as an LED (Light Emitting Diode) is suitable for impulse type light emission." *Id.*; *see also id.* ¶ 279. Light guide plate 9a is divided into four areas L0, L1, L2, and L3.[8] *Id.* ¶ 18. L0 illuminates the picture elements scanned by gate lines g0 and g1, L1 illuminates the picture elements scanned by gate lines g2 and g3, L2 illuminates the picture elements scanned by gate lines g4 and g5, and L4 illuminates the picture elements scanned by gate lines g6 and g7. *Id.* Turning ON and turning OFF each of L0, L1, L2, and L3 is independently controlled by the corresponding turn ON signals p0, p1, p2, and p3. *Id.* The number of lamps that illuminate one area is not limited to one or two. *Id.* ¶¶ 19, 144.

Turn ON signal generating circuit 10a generates impulse signals i0 to i3 that are synchronized with a vertical sync signal "vs." Ex. 1005 ¶ 113, Fig. 2. Figure 3, reproduced below, "illustrates operating waveforms of the vertical sync signal vs, the impulse signals i0 to i3, the high frequency signal h, and the lamp turn ON signals p0 to p3." *Id.* ¶ 121.

[8] Seo states that the number of areas is not limited to four. Ex. 1005 ¶ 144.

FIG. 3

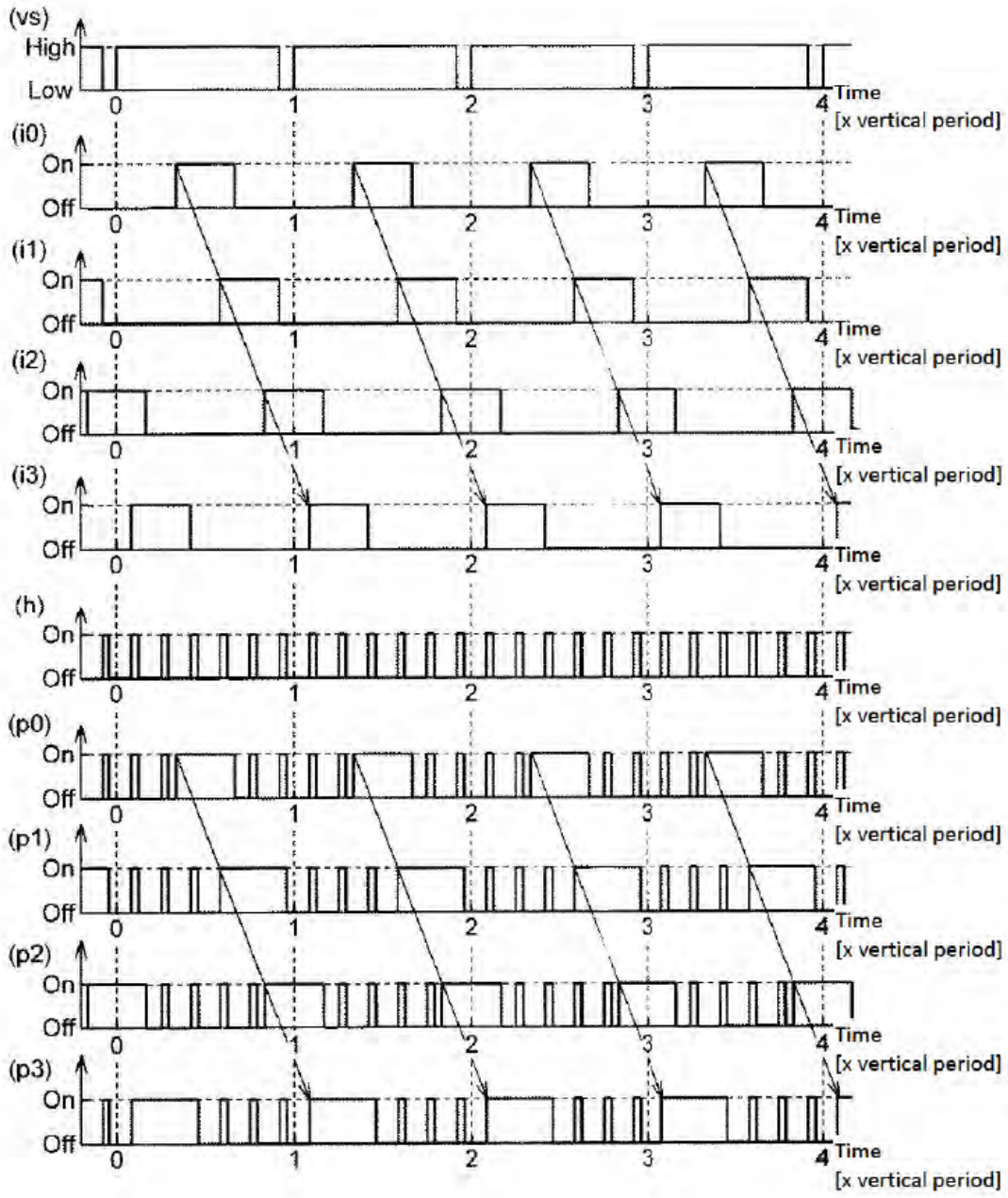

Figure 3, above, depicts "impulse signals i0 to i3 emitted once per vertical period while the high frequency signal h is emitted a plurality of times per vertical period. The lamp turn ON signal p0 is a composite of the impulse signal i0 and high frequency signal h." *Id.* ¶ 122. "Similarly, the turn ON signal p1 is a composite of the impulse signal i1 and the high frequency

signal h, the turn ON signal p2 is a composite of the impulse signal i2 and the high frequency signal h, and the turn ON signal p3 is a composite of the impulse signal i3 and the high frequency signal h." *Id.*

Figure 4, reproduced below, "illustrates the light emission waveforms of areas L0 to L3 on the light guide plate 9a in" Figure 1.

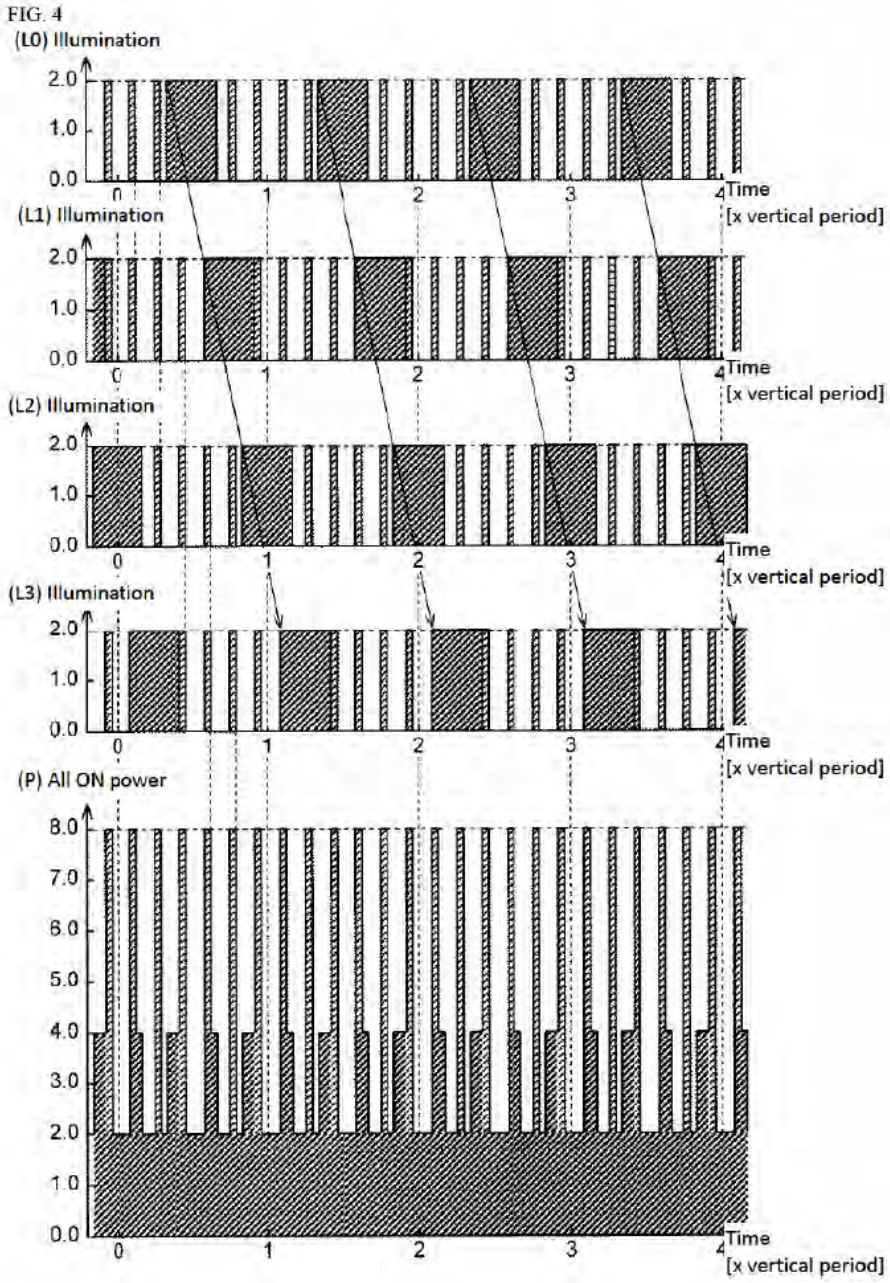

Figure 4, above, depicts parts hatched with thick lines indicating light emission corresponding to impulse signals i0 to i3 in Figure 3, and hatched with thin lines to indicate light emission corresponding to the high frequency signal h of Figure 3. *Id.* ¶ 124. Figure 4 illustrates that "normally the light emission time (pulse width) using the impulse signals i0 to i3 is longer than the light emission time (pulse width) using the high frequency signal h." *Id.*

Figure 6, reproduced below, "is a calculation result of the Fourier series of the light emission waveform of the area L0 according to [the present invention]. . . and the emission waveform of the region L0 according to the prior art." Ex. 1005 ¶ 130.

FIG. 6

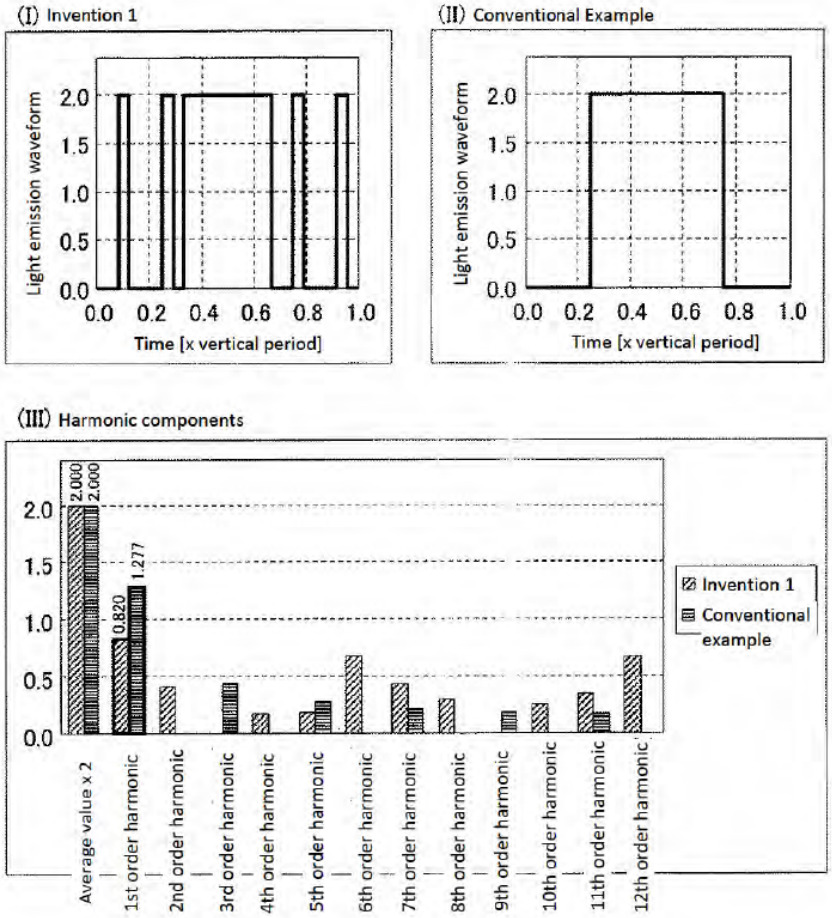

Figure 6, above, depicts Part I, which shows the same waveform as the light emission waveform of the area L0 shown in Figure 4; Part II, the conventional example waveform; and Part III, which is the harmonic component of the light emission waveform of area L0 in the present invention and the conventional example. *Id.* ¶ 130.

Seo explains that "the high frequency signal h contributes to the light emission luminance of the backlight," and "the light emission luminance corresponding to the impulse control signals i0 to i3 can be lowered by [the light emission generated by the high frequency signal h]" to suppress flicker disturbance. Ex. 1005 ¶¶ 135, 136.

A PWM (pulse width modification) dimming function, d, may also be added. Ex. 1005 ¶ 148. "The PWM dimming signal d has a frequency sufficiently higher than that of the pseudo hold pulse signal h, for example a 500 kHz signal." *Id.* ¶ 153.

Figure 9, reproduced below, "illustrates operation waveforms" for another embodiment of signal generating circuit 10a. *Id.* ¶ 154.

FIG. 9

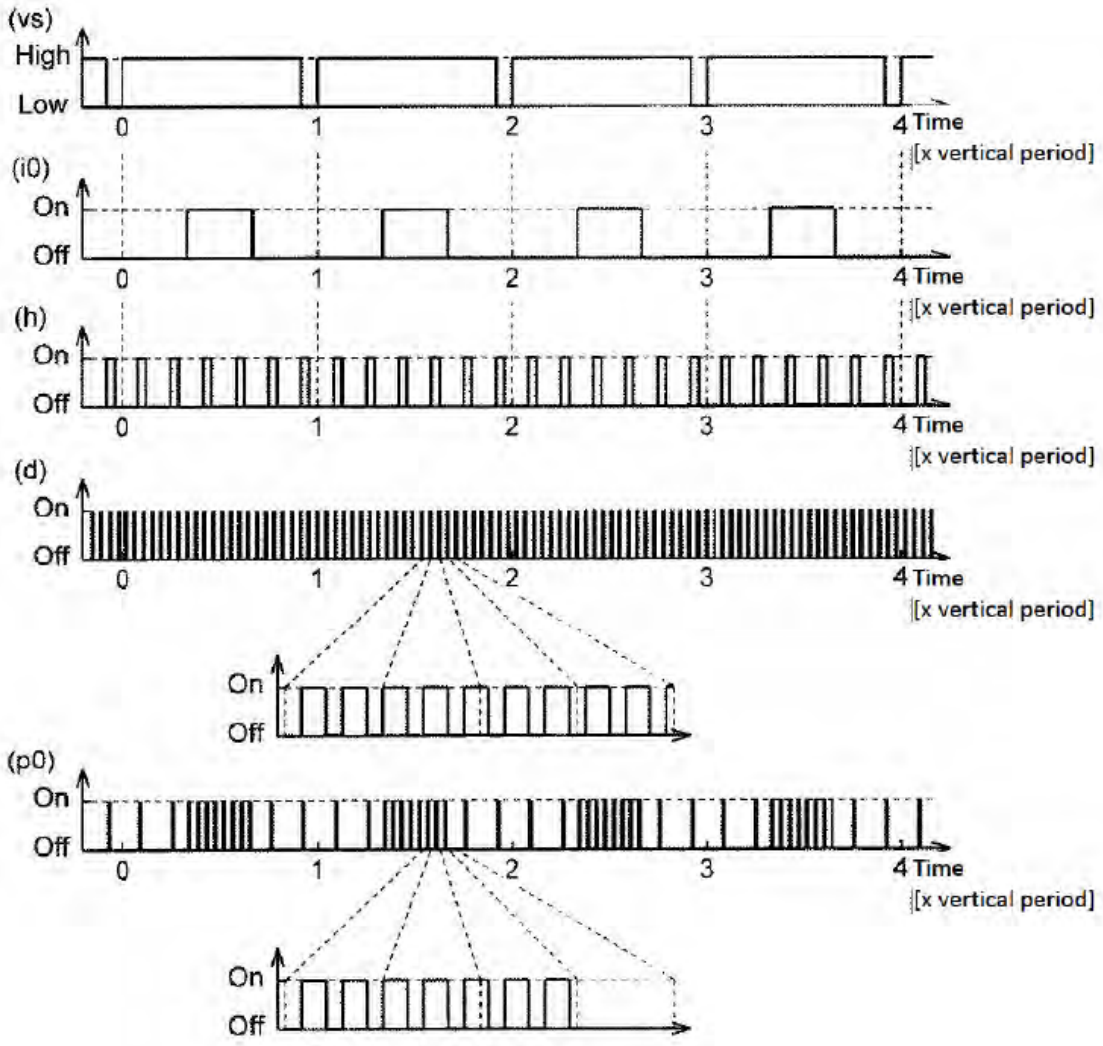

Figure 9, above, "illustrates operation waveforms . . . the vertical sync signal vs. impulse signal i0, pseudo hold pulse signal h, PWM dimming signal d, and lamp turn ON signal p0." *Id.* ¶ 154.

2. Analysis of Independent Claim 1

a) Petitioner's Contentions

Claim 1 recites "a first circuitry for controlling luminosity levels of a plurality of strings of light emitting diodes (LEDs)" (limitation 1[A]) and "the first circuitry for adjusting the luminosity levels of the plurality of strings of LEDs for a plurality of times within the predetermined period of time" (limitation 1[Di]).[9]

Regarding limitation 1[A], Petitioner asserts that Seo's generating circuit 10a "is the first circuitry for controlling the luminosity levels of the LEDs." Pet. 19 (citing Ex. 1005 ¶¶ 111–114, 136, 145–166). According to Petitioner, generating circuit 10a "produces three kinds of luminosity-driving clock signals: impulse signal 'i0-i3' [], pseudo hold pulse signal 'h,' and PWM [pulse width modulation] dimming signal 'd.'" *Id.* (citing Ex. 1005 ¶ 154). Relying on Figure 1, Petitioner contends that the "vs" (vertical synchronization clock signal) is used to generate the luminosity-driving clock signals "i0-i3," "h," and "d." *Id.* at 21 (citing Ex. 1002 ¶ 80). Petitioner asserts that "the light emission luminance correspond[s] to the impulse signals i0 to i3, as well as 'h' and 'd' from circuit 10," and that "these signals are used to drive LEDs." *Id.* at 22 (citing Ex. 1005 ¶¶ 116, 135, 136). Petitioner therefore asserts that Seo's generating circuit 10a "is thus being used to control luminosity levels using impulse signals sent to the LEDs for backlighting the display pixels." *Id.* (citing Ex. 1002 ¶ 80).

[9] Our analysis focuses on two limitations in independent claim 1. We take no position as to whether Petitioner has shown that the art teaches the other limitations of claim 1.

Regarding limitation 1[Di], Petitioner contends that Seo's generating circuit 10a provides impulse signals used to adjust luminosity levels. *Id.* at 30 (citing Ex. 1002 ¶ 94, referring to limitation 1[A]).

Relying on Seo's Figure 4, Petitioner asserts that a person of ordinary skill in the art would have understood the illuminating areas (i.e., L0 to L3 of the light guide plate 9a) "to emit light synchronized with the vertical sync signal 'vs' (which defines the 'predetermined period of time' during which an image frame is displayed)." Pet. 30 (citing Ex. 1002 ¶ 94).

Petitioner contends that "[a]n example of the luminosity-driving impulse signal i0 is shown in Figure 9 . . . underneath the image-display signal vs." Pet. 31. Petitioner contends that Seo discloses that the illuminating areas (i.e., L0 to L3) are independently controlled by the corresponding turn ON signals p0 to p3. *Id.* (citing Ex. 1005 ¶ 18). Petitioner contends that "the lamp turn ON signal 'p0' is a signal for adjusting the luminosity levels of the lamp (LED) being adjusted for a plurality of times with a single 'vs' period (the predetermined period of time) based on clock signals: 'pseudo hold pulse signal h' and a 'PWM dimming signal d.'" *Id.* at 32 (citing Ex. 1005 ¶ 154). Petitioner contends that, "[a]s shown in Figure 9, the lamp turn ON signal 'p0' is a composite of the impulse signal 'i0,' high frequency signal 'h,' and PWM dimming signal 'd.'" *Id.* (citing Ex. 1005, Fig. 9; Ex. 1002 ¶ 95). Petitioner contends that Figure 9 depicts that "'h' will adjust the luminosity 6 times in a single 'vs' period . . . [and] 'd' . . . will adjust the luminosity even more times than 'h' within the same 'vs' time period." *Id.* at 33 (citing Ex. 1005, Fig. 9).

Petitioner also relies on Figure 6 of Seo, asserting that it "shows the illumination caused by the superposition of luminosity-driving signals 'i0,'

'h,' and 'd.'" Pet. 35–36 (citing Ex. 1002 ¶¶ 100, 101). Petitioner states "[a]s can be seen in Figure 6, the light emission (i.e., luminosity) is adjusted at least 5 times during the 'vs' time period." *Id.* (citing Ex. 1005, Fig. 6).

b) Patent Owner's Contentions

Patent Owner contends that Petitioner fails to show "that Seo's pulse-width modulation (PWM) scheme satisfies the claimed adjustments of luminosity levels." Prelim. Resp. 28 (citing Ex. 2002 ¶¶ 32, 33). According to Patent Owner, "[m]erely pulsing a backlight on and off does not implicitly or inherently result in an adjustment to luminosity." *Id.* (citing Ex. 2002 ¶ 33). Patent Owner contends that Seo teaches PWM that results in reduced flicker and luminance while keeping brightness constant, not that luminance levels are adjusted. *Id.* Patent Owner further contends that the '887 patent "discusses the use of PWM backlight control but never refers to an LED pulse as a luminosity adjustment." *Id.* at 28–29 (citing Ex. 1001, 1:47–56; Ex. 2001 ¶ 33).

Patent Owner argues that Petitioner and Dr. Hatalis have not provided explanation that the pulses in Seo's figures are "used for adjusting the luminosity levels or will adjust the luminosity." Prelim. Resp. 29. Patent Owner specifically refers to Petitioner's assertions that Figure 9 shows that pulses of "h" will adjust luminosity six times. *Id.* Patent Owner also argues that Seo's Figure 6 "does not show luminosity levels," but instead "explains that Figure 6 is 'a calculation result of the Fourier series of the light emission waveform of the area L0 according to invention 1.'" *Id.* at 29 (citing Ex. 1005 ¶ 130). Patent Owner contends that "[n]either Petitioner nor Dr. Hatalis makes any attempt to explain whether or how 'a calculation result of the Fourier series' relates to luminosity levels." *Id.*

Patent Owner further contends that the '887 patent and Seo are directed at different aims, i.e., "Seo aims to maintain brightness at constant levels, while the '887 patent is designed to adjust luminosity at a high rate." Pet. 29 (citing Ex. 2001 ¶¶ 27, 28, 34); *see also id.* at 30.

c) Analysis

Having reviewed the record, we agree with Patent Owner that Petitioner has not sufficiently explained how or why Seo teaches "the first circuitry for *adjusting the luminosity levels*," as recited in limitation 1[Di].

Petitioner begins by asserting, without explanation, that impulse signals ("i"), pseudo hold pulse signals ("h"), and PWM dimming signals ("d") are *luminosity-driving* clock signals. *See* Pet. 19. In support of this statement, Petitioner cites to paragraph 154 of Seo, which states:

> FIG. 9 illustrates operation waveforms of each part of the circuit of FIG. 8, in other words, the vertical sync signal vs, impulse signal i0, pseudo hold pulse signal h, PWM dimming signal d, and lamp turn ON signal p0. As for the PWM dimming signal d and the lamp turn ON signal p0, a part of the signal is extracted and the time axis is drawn enlarged.

Ex. 1005 ¶ 154. As shown, this paragraph generally describes Figure 9, but does not, on its face, provide support that these signals are luminosity-driving, as asserted by Petitioner.

Petitioner also relies on paragraphs 135 and 136 of Seo.[10] Pet. 21. Paragraph 135 of Seo states:

---

[10] Petitioner also cites to paragraph 116 of Seo (Pet. 21), but this citation appears to be in error, as the paragraph does not appear to be related to Petitioner's contentions as to this point:

> In invention 1, the luminous component corresponding to the high frequency signal h flashes at a frequency higher than the critical fusion frequency CFF, and so does not cause flicker. However, the high frequency signal h contributes to the light emission luminance of the backlight.

Paragraph 136 of Seo states:

> In other words, the light emission generated by the high frequency signal h is easily perceived. And the light emission luminance corresponding to the impulse signals i0 to i3 can be lowered by this amount. Thus, flicker disturbance is suppressed. In invention 1, this is the effect of replacing the turn ON signal generating circuit 10 of FIG. 35 with the turn ON signal generating circuit 10a.

At best, Petitioner has established that Seo teaches a *correspondence* between luminance and impulse signals ("i"), pseudo hold pulse signals ("h"), and PWM dimming signals ("d"). The testimony from Dr. Hatalis that Petitioner relies upon similarly asserts, without explanation or reasoning, that these signals are "luminosity-driving," and, therefore, is not persuasive to support Petitioner's burden for institution. *See, e.g.*, Ex. 1002 ¶ 80. In short, Petitioner and Dr. Hatalis provide conclusory statements that the foregoing signals are "luminosity-driving," but do not provide an explanation as to why this is the case, and the citations to Seo do not make

---

> Furthermore, the frequency of clearing the counter 202p, in other words the count frequency, must be set higher than the critical fusion frequency (CFF) where flicker is not visible. Note, the count frequency can be an integer multiple or a non-integer multiple of the vertical frequency and simply needs to be set so as to not interfere with horizontal scanning frequencies or other frequencies that would generate bits. The setting means 203a holds parameters for setting this frequency.

this readily apparent. However, even assuming the foregoing signals are "luminosity-driving," Petitioner fails to sufficiently show that Seo teaches "*adjusting* the luminosity levels."

Petitioner relies on Figures 6 and 9 of Seo to teach "*adjusting* the luminosity levels" as recited in limitation [1Di]. Petitioner takes the position that impulse signals ("i"), pseudo hold pulse signals ("h"), PWM dimming signals ("d"), and lamp turn ON signal ("p") may all adjust the luminosity levels. Pet. 31–36. Petitioner's annotation of Seo's Figure 9 is reproduced below:

FIG. 9

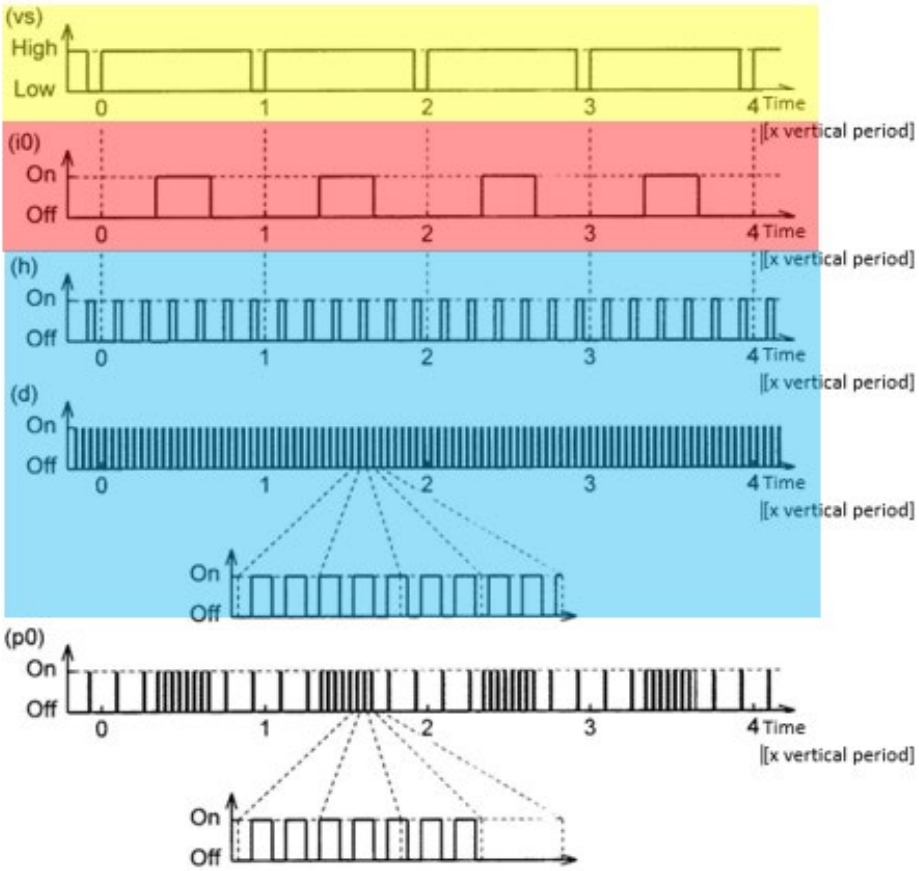

Petitioner's annotated Figure 9, above, shows operation waveforms for the vertical sync signal ("vs") (yellow), impulse signal ("i0") (red), pseudo hold pulse signal ("h") (blue), and PWM dimming signal ("d") (blue), and lamp turn ON signal ("p0"). With respect to Figure 9, Petitioner asserts, again without explanation, that these are luminosity-driving signals that are used for adjusting the luminosity levels multiple times within a single "vs" period. *See, e.g.*, Pet. 31–32; *see also id.* at 10–11. Petitioner contends that Figure 9 depicts that "h" will adjust the luminosity 6 times in a single "vs" period, and "d" is driven at an even higher frequency. Pet. 33–34. However, Petitioner provides no explanation as to why Figure 9 teaches an adjustment to the luminosity. Similarly, Dr. Hatalis's testimony also concludes, without providing any reasoning or explanation, that Figure 9 shows an adjustment to the luminosity. *See* Ex. 1002 ¶¶ 95–97.

We understand that Petitioner identifies each of the "peaks" in the waveforms shown in Figure 9 as an adjustment to the luminosity for each "vs" period. However, we find persuasive Patent Owner's arguments that Petitioner has not shown how Seo's PWM scheme, which pulses a backlight on and off, results in an adjustment to luminosity. *See* Prelim. Resp. 28. Dr. Credelle provides persuasive testimony, supported by Figure 9 of Seo, that "[b]oth 'h' and 'd' are only PWM ***clock signals*** that control the ON duration of the LED at a constant brightness across all four frames shown in [Figure 9]." Ex. 2001 ¶ 33; *see* Ex. 1005, Fig. 9 (vertical axis identified as "On" and "Off"). He further testifies that "Seo's pulsing of a backlight in a fixed pattern over the time period of a frame results in constant display brightness over the period of the frame. Seo's clock signals 'h' and 'd' thus do not

show any adjustments to the luminosity levels of the plurality of LED strings in the 'vs' time period." *Id.*

Petitioner's contentions as to Seo's Figure 6 are similarly deficient. Petitioner asserts, without explanation, that Seo's Figure 6 "shows that these signals cause the luminosity of the LEDs to be adjusted several times within a single 'vs' time period." Pet. 35. Dr. Hatalis's testimony as to Figure 6 essentially repeats what is stated in the Petition, without further explanation. Ex. 1002 ¶¶ 100, 101. Here, again, we understand Petitioner identifies each of the "peaks" shown in Part I of Figure 6 as an adjustment to the luminosity for each "vs" time period. *See* Pet. 35 ("As can be seen in Figure 6, the light emission (i.e., luminosity) is adjusted at least 5 times during the 'vs' time period."). However, Petitioner does not sufficiently explain why there has been an adjustment to the luminosity. As Patent Owner points out (Prelim. Resp. 29), Seo describes that Figure 6 "is a calculation result of the Fourier series of the light emission waveform of the area L0 according to invention 1." Ex. 1005 ¶ 130. Neither Petitioner nor Dr. Hatalis explains how this "calculation result of the Fourier series of the light emission waveform of the area L0" relates to adjusting luminosity levels.

Dr. Credelle also provides persuasive testimony regarding Figure 4 of Seo. Dr. Credelle testifies that Figure 4 shows that "[a]cross the time period of a frame, each lamp L0-L3 . . . maintains a constant illumination using only a repeated PWM pattern that is designed to emit a set amount of light during the frame," and "this pattern of illumination is not modified during any of the frames." Ex. 2001 ¶ 35. Dr. Credelle testifies that, "[b]ecause each light source has a constant, repeating PWM waveform over each frame, a [person of ordinary skill in the art] would not consider Seo to teach or

suggest that the luminosity levels of the light sources of Seo are adjusted—let alone multiple times within the time period of a frame." *Id.* ¶ 36.

Patent Owner argues that we should not credit Dr. Hatalis's opinions because (1) they are conclusory and generally repeat verbatim the Petition, and (2) Dr. Hatalis is not a person of ordinary skill in the art, under Petitioner's proposed definition. Prelim. Resp. 30–34. Although we note that portions of Dr. Hatalis's testimony repeat verbatim the contentions in the Petition, there are at least some differences between Dr. Hatalis's testimony and the Petition. *E.g.*, *compare* Pet. 30–31 (discussing Figure 4), *with* Ex. 1002 ¶ 94; *compare* Pet. 31–32 (discussing Fig. 9), *with* Ex. 1002 ¶ 95. As discussed above, Dr. Hatalis's testimony is generally conclusory, without additional explanation or support for Petitioner's contentions. *See* 37 C.F.R. § 42.65(a) ("Expert testimony that does not disclose the underlying facts or data on which the opinion is based is entitled to little or no weight."). To that end, on its face, Dr. Hatalis's testimony is entitled to little weight. *See Verlander v. Garner*, 348 F.3d 1359, 1371 (Fed. Cir. 2003) (noting that Board has discretion to accord little weight to expert's "broad conclusory statements that it determined were unsupported by corroborating references"). However, even considering Dr. Hatalis's testimony, as set forth above, Petitioner's contentions do not sufficiently show that Seo discloses limitation 1[Di] for purposes of institution.

d) Conclusion for Independent Claim 1

Based on our review and consideration of the current record, Petitioner fails to meet the burden required to support institution of *inter partes* review of independent claim 1 based on obviousness over Seo. *Harmonic*, 815 F.3d at 1363 (quoting 35 U.S.C. § 312(a)(3) (requiring *inter*

partes review petitions to identify "with particularity . . . the evidence that supports the grounds for the challenge to each claim") (internal quotations omitted)); *cf. Intelligent Bio-Systems*, 821 F.3d at 1369 (quoting 35 U.S.C. § 312(a)(3)) (addressing "the requirement that the initial petition identify 'with particularity' the 'evidence that supports the grounds for the challenge to each claim'"). Accordingly, Petitioner has not demonstrated a reasonable likelihood of prevailing in its challenge to independent claim 1 of the '887 patent over Seo.

3. Claims 2–5, 7, 10, 11, 13–15, 18–20

Independent claim 13 similarly recites "using the clock signal for adjusting luminosity levels of a plurality of strings of light emitting diodes (LEDs) in a backlighting circuitry of the electronic display" and "wherein the luminosity levels of at least one of the plurality of strings of LEDs are adjusted a plurality of times based on the clock signal during display of one image frame in a sequence of image frames." Ex. 1001, 7:44–8:7. For these limitations, Petitioner relies on the same contentions as for limitations [1A] and [1Di] discussed above. Pet. 19–25, 30–36. Therefore, for the same reasons discussed above, Petitioner fails to meet the burden required to support institution of *inter partes* review of independent claim 13 and dependent claims 2–5, 7, 10, 11, 14, 15, and 18–20 over Seo.

4. Summary

We determine that Petitioner has not demonstrated a reasonable likelihood that at least one claim is unpatentable under 35 U.S.C. § 103(a) over Seo.

E. Alleged Obviousness Over Seo and Fung

Petitioner contends that claims 1–7, 10–15, and 17–20 are unpatentable over the combination of Seo and Fung. Pet. 17–53. Petitioner's contentions regarding "adjusting the luminosity levels" are identical to those discussed above for limitations [1A] and [1Di] over Seo.[11] Pet. 19–25, 30–36, 50–53. Therefore, for the same reasons discussed above, Petitioner fails to meet the burden required to support institution of *inter partes* review of claims 1–7, 10–15, and 17–20 over Seo and Fung. We determine that Petitioner has not demonstrated a reasonable likelihood that at least one claim is unpatentable under 35 U.S.C. § 103(a) over Seo and Fung.

F. Alleged Obviousness Over Seo, Fung, and Yao

Petitioner contends that dependent claims 8, 9, 16, 21 are unpatentable over the combination of Seo, Fung, and Yao. Pet. 54–60. Petitioner does not rely on Yao to cure any deficiencies discussed above. Therefore, for the same reasons discussed above, Petitioner has not demonstrated a reasonable likelihood that at least one claim is unpatentable under 35 U.S.C. § 103(a) over Seo, Fung, and Yao.

G. Alleged Obviousness Over Seo and Honbo

Petitioner contends that claims 1–21 are unpatentable over the combination of Seo and Honbo. Pet. 60–75. Petitioner's contentions regarding "adjusting the luminosity levels" are identical to those discussed above for limitations [1A] and [1Di] over Seo. Pet. 62, 65, 67, 68. Therefore, for the same reasons discussed above, Petitioner fails to meet the

[11] Petitioner relies on Fong to teach a "plurality of strings of LEDs." Pet. 24–25.

burden required to support institution of *inter partes* review of claims 1–21 over Seo and Honbo. We determine that Petitioner has not demonstrated a reasonable likelihood that at least one claim is unpatentable under 35 U.S.C. § 103(a) over Seo and Honbo.

IV. CONCLUSION

After considering the evidence and arguments presented in the Petition, we determine Petitioner has not established a reasonable likelihood of prevailing on its assertion that at least one claim of the '887 patent is unpatentable. Accordingly, we do not institute an *inter partes* review.

V. ORDER

In consideration of the foregoing, it is hereby:

ORDERED that the Petition is denied as to all challenged claims of the '887 patent and no trial is instituted.

For PETITIONER:

William Fink
Ben Haber
Kyla Butler
O'MELVENY & MYERS LLP
tfink@omm.com
bhaber@omm.com
kbutler@omm.com

For PATENT OWNER:

Robert C. Mattson
David Alberti
Sal Lim
KRAMER ALBERTI LIM & TONKOVICH LLP
rmattson@feinday.com
dalberti@feinday.com
slim@feinday.com

Jason A. Fitzsimmons
Michael D. Specht
Richard M. Bemben
STERNE, KESSLER, GOLDSTEIN & FOX PLL
jfitzsimmons-ptab@sterneskessler.com
mspecht-ptab@sternekessler.com
rbemben-ptab@sternekessler.com