US006655260B2

(12) **United States Patent**
Lazaris et al.

(10) **Patent No.: US 6,655,260 B2**
(45) **Date of Patent: Dec. 2, 2003**

(54) **BEVERAGE FILTER CARTRIDGE HOLDER**

(75) Inventors: **Nicholas G. Lazaris**, Newton, MA (US); **Roderick H. Beaulieu**, Cumberland, RI (US)

(73) Assignee: **Keurig, Incorporated**, Wakefield, MA (US)

(*) Notice: Subject to any disclaimer, the term of this patent is extended or adjusted under 35 U.S.C. 154(b) by 0 days.

(21) Appl. No.: **10/115,456**

(22) Filed: **Apr. 3, 2002**

(65) **Prior Publication Data**

US 2002/0148356 A1 Oct. 17, 2002

Related U.S. Application Data

(60) Provisional application No. 60/283,298, filed on Apr. 11, 2001, and provisional application No. 60/283,283, filed on Apr. 11, 2001.

(51) **Int. Cl.**[7] **A47J 31/06**; A47J 31/40

(52) **U.S. Cl.** ..... **99/295**; 99/302 R

(58) **Field of Search** ..... 99/295, 302 R, 99/302 P, 287, 279, 300

(56) **References Cited**

U.S. PATENT DOCUMENTS

5,197,374	A	*	3/1993	Fond	99/295
5,603,254	A		2/1997	Fond et al.	99/295
5,794,519	A	*	8/1998	Fischer	99/295
5,840,189	A	*	11/1998	Sylvan et al.	99/295 X
6,026,732	A		2/2000	Kollep et al.	99/295

* cited by examiner

Primary Examiner—Reginald L. Alexander
(74) *Attorney, Agent, or Firm*—Samuels, Gauthier & Stevens

(57) **ABSTRACT**

A brewer operates during a brew cycle to brew a beverage by infusing heated liquid with a dry beverage medium contained in a single serve disposable cartridge. During the brew cycle, the cartridge is contained in a cup-shaped housing closed by a lid. Rotation of the cartridge within the housing is resisted by locating surfaces arranged to interengage with at least one surface irregularity in the cartridge sidewall. Inlet and outlet probes pierce the cartridge and serve, respectively, to admit the heated liquid and to remove the served beverage.

6 Claims, 9 Drawing Sheets

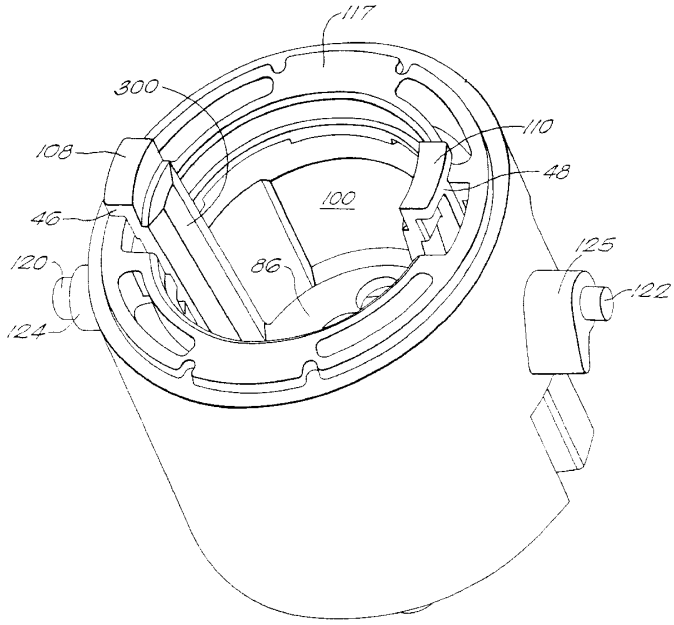

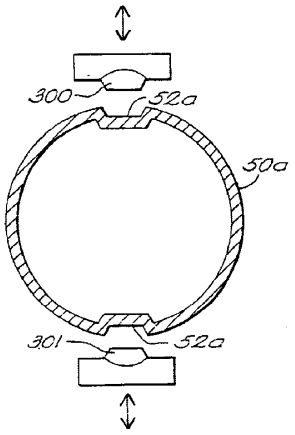

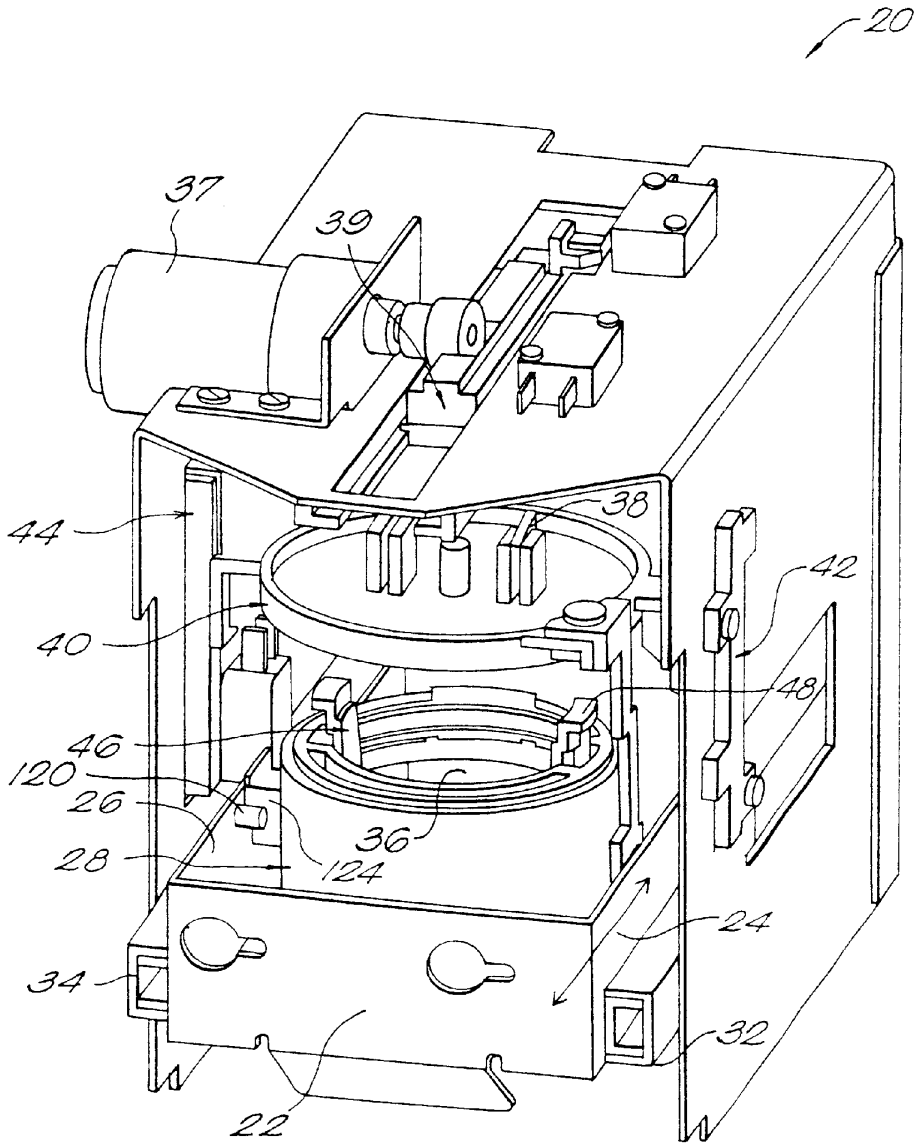

FIG. 1

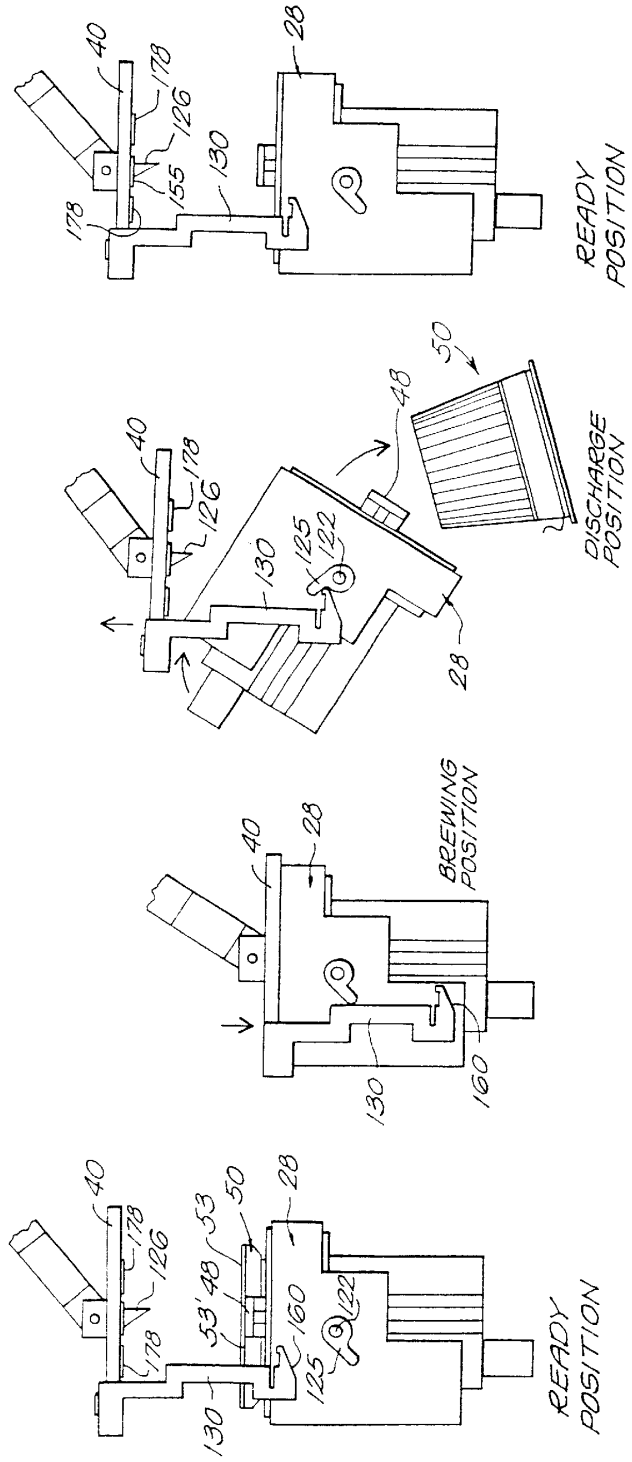

FIG. 2A FIG. 2B FIG. 2C FIG. 2D

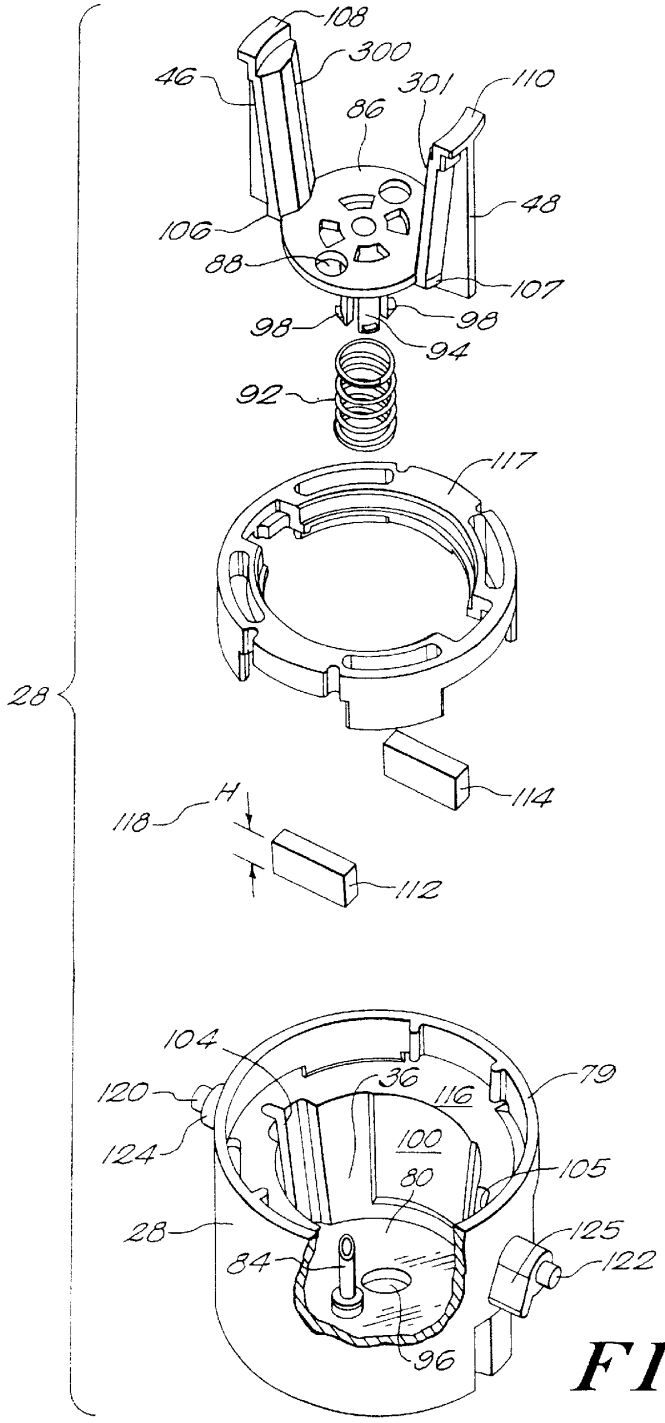
108
300
46
301
110
86
48
106
88
107
98
98
94
92
117
28
114
118
H
112
104
120
36
116
79
124
100
80
105
28
125
84
122
96

FIG. 3

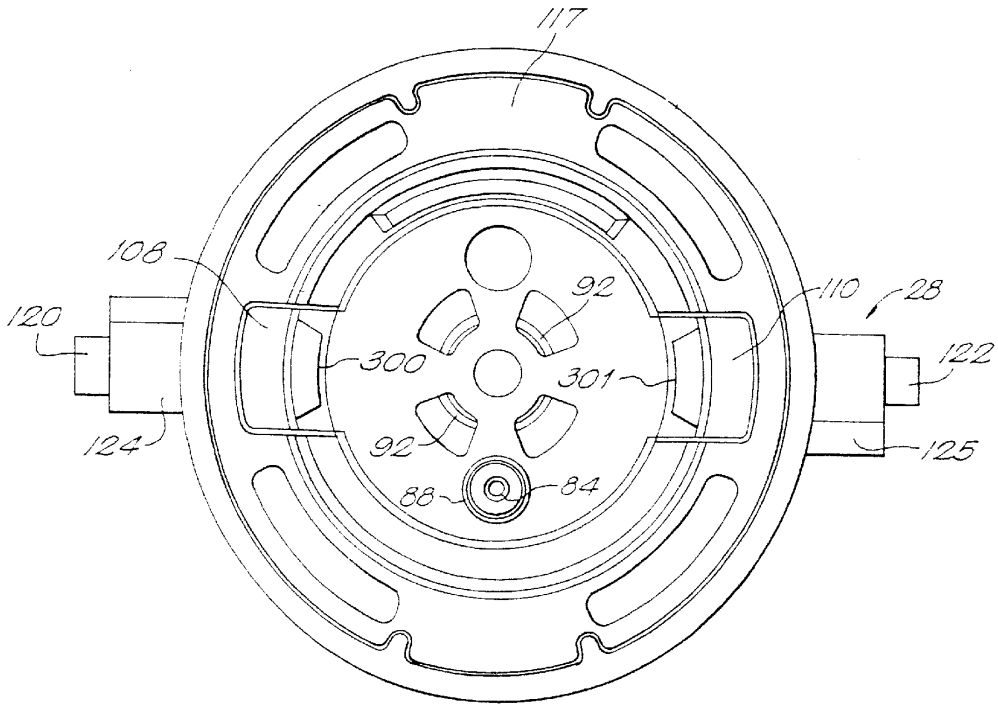

FIG. 4

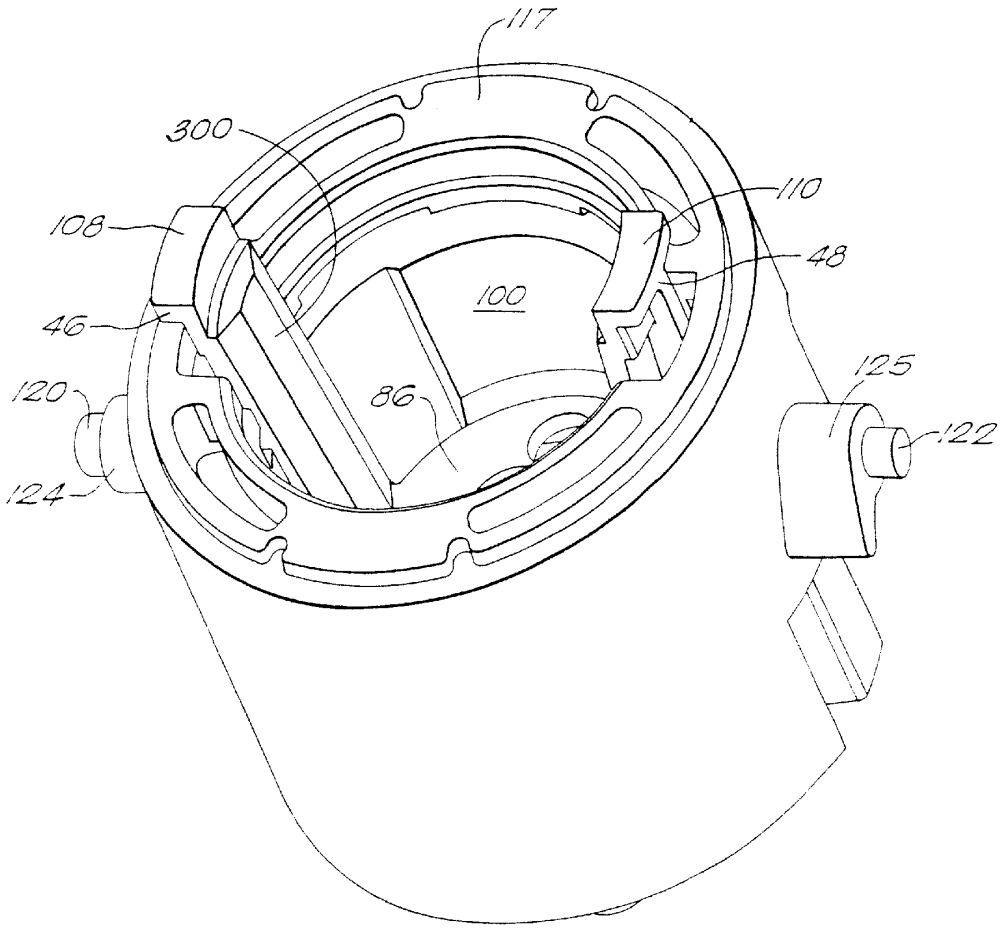

FIG. 5

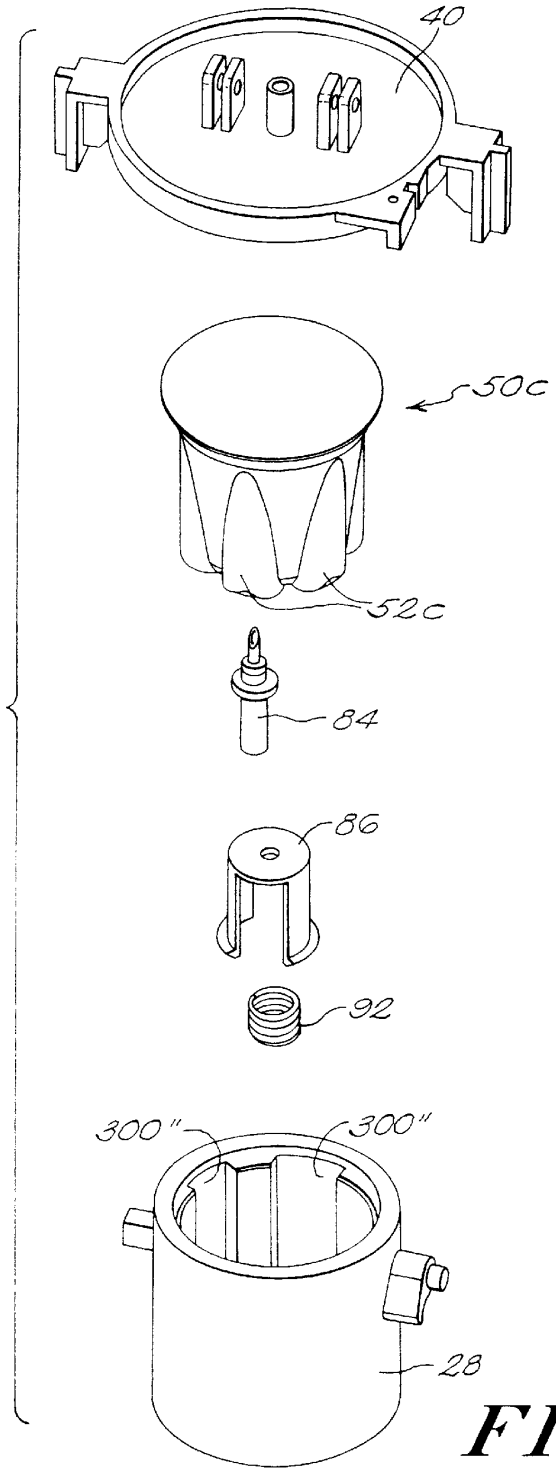

FIG. 6

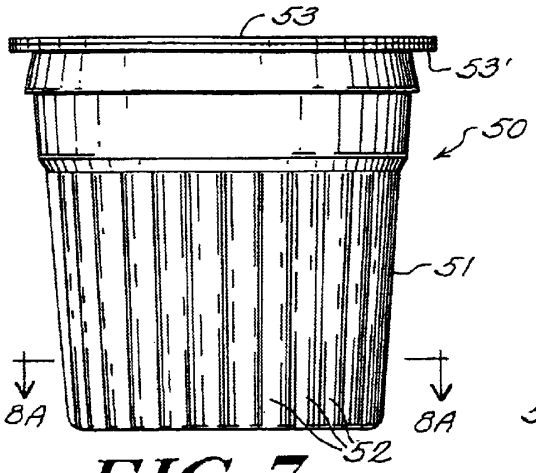

FIG. 7

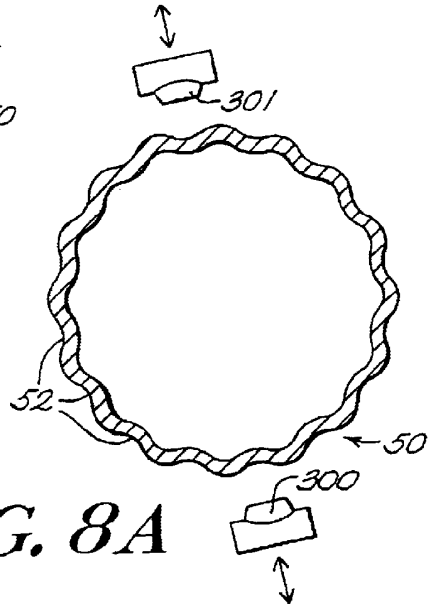

FIG. 8A

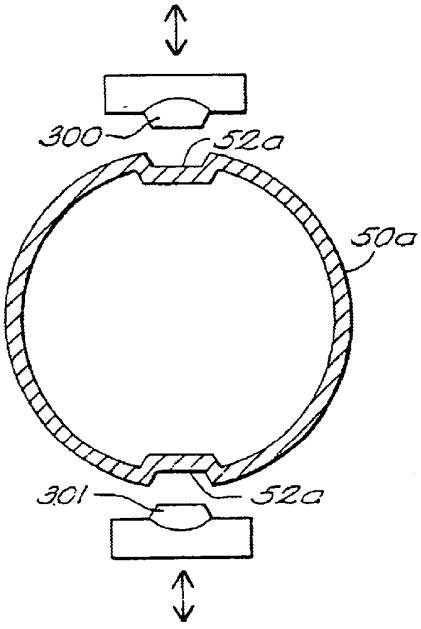

FIG. 8B

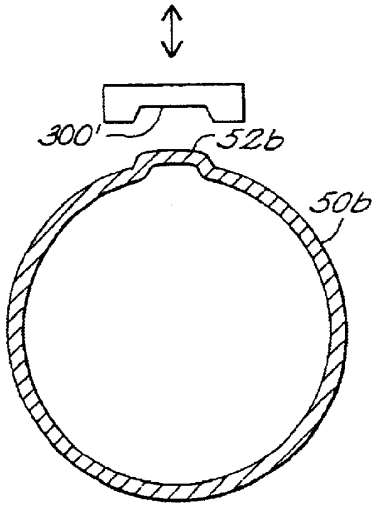

FIG. 8C

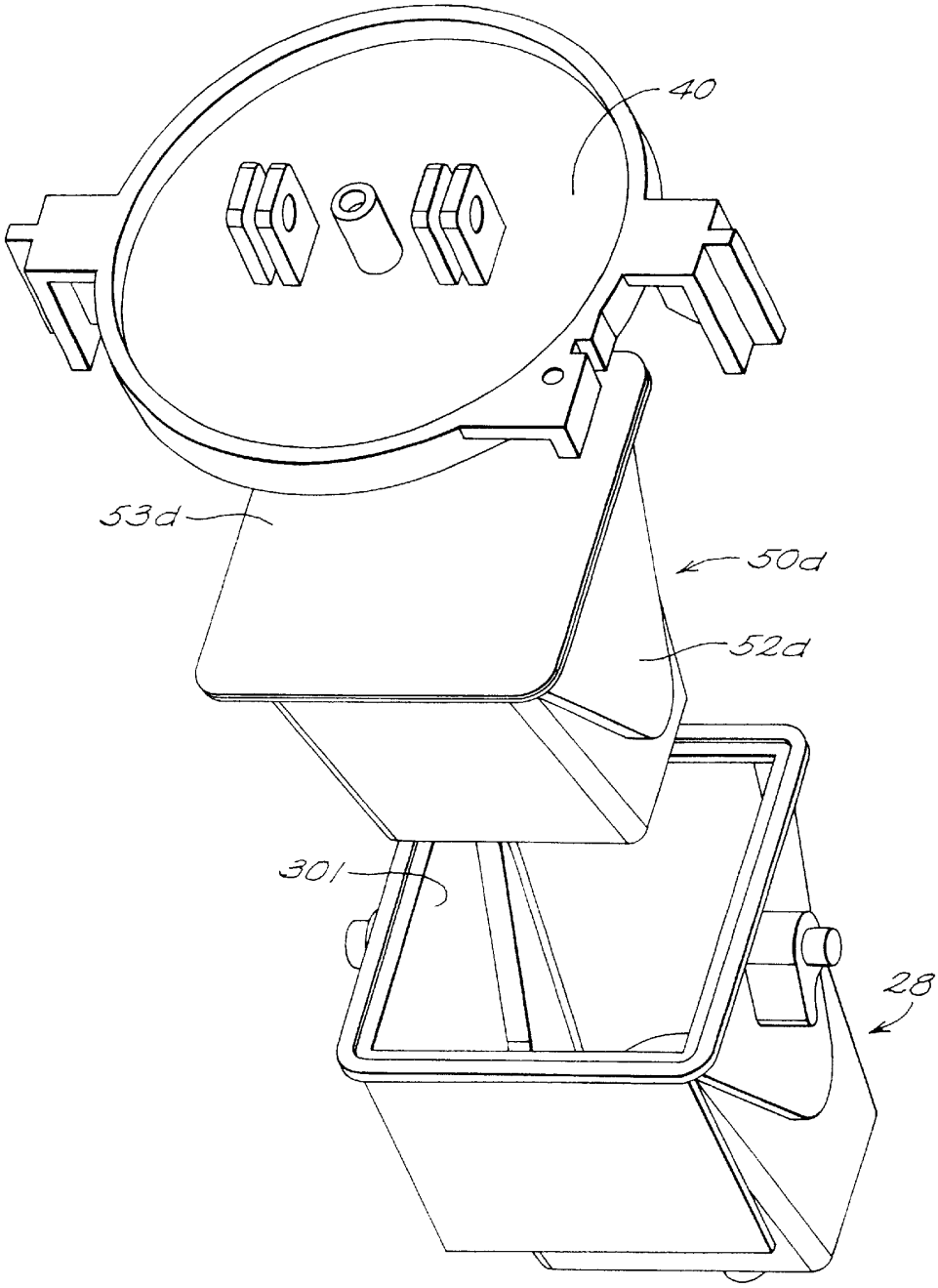

FIG. 9

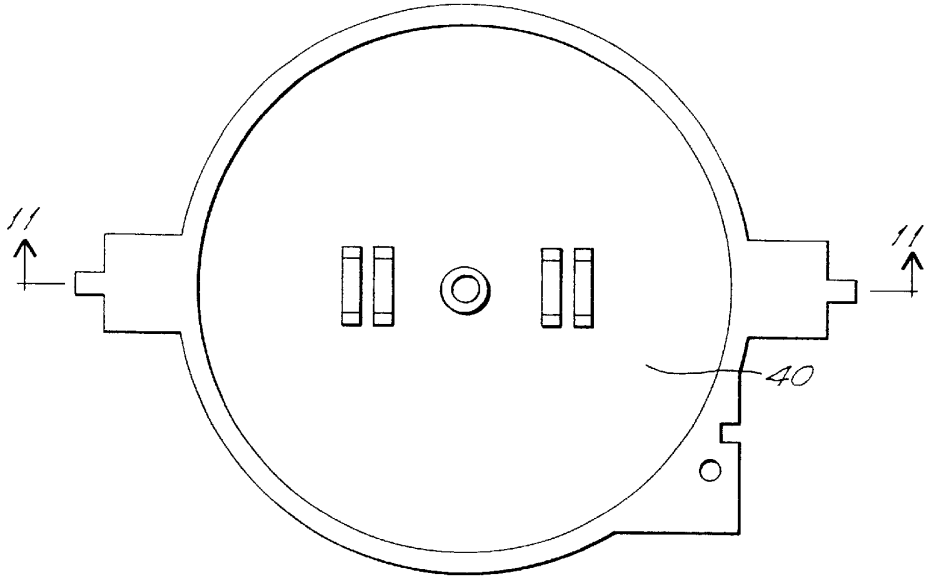

FIG. 10

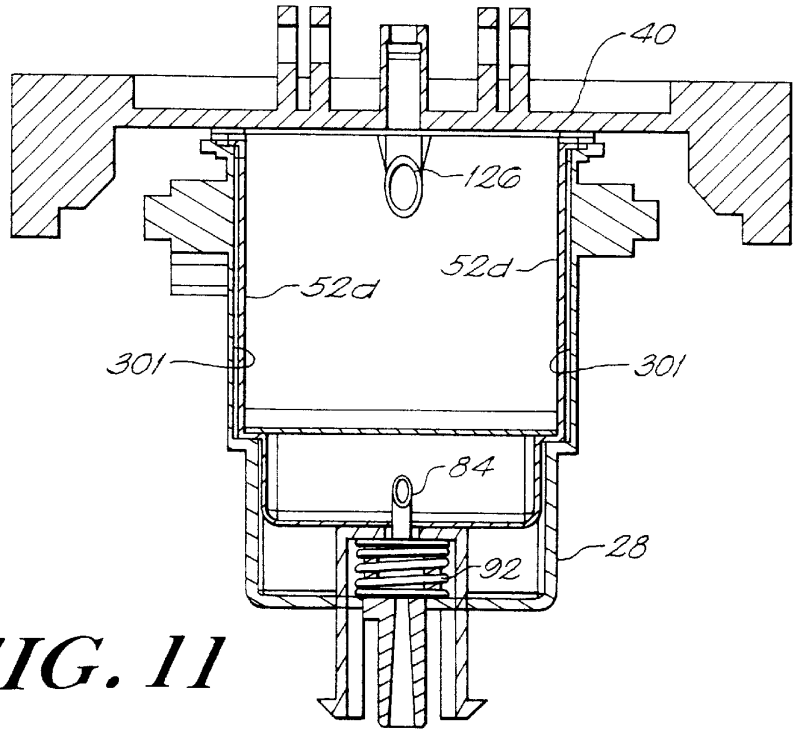

FIG. 11

BEVERAGE FILTER CARTRIDGE HOLDER

CROSS REFERENCE TO RELATED APPLICATIONS

This application claims priority of provisional patent application Serial No. 60/283,298 filed Apr. 11, 2001, and provisional patent application Serial No. 60/283,283 filed Apr. 11, 2001.

The subject matter of this application is generally related to those of U.S. Pat. No. 6,079,315 (Beaulieu et al.) entitled Beverage Filter Cartridge Holder; U.S. Pat. No. 5,840,189 (Sylvan et al.) entitled Beverage Filter Cartridge; application Ser. No. 09/782,622 filed Feb. 13, 2001 (Sweeney et al.) entitled Beverage Filter Cartridge; and application Ser. No. 09/782,660 filed Feb. 13, 2001 (Lazaris et al.) entitled Disposable Single Serve Beverage Filter Cartridge, the disclosures of each of which are herein incorporated by reference.

BACKGROUND DISCUSSION

1. Field of the Invention

This invention relates generally to brewers designed to produce single beverage servings by injecting heated liquid into disposable cartridges containing a dry beverage medium, and is concerned in particular with an improved beverage filter cartridge holder for such brewers.

2. Description of the Prior Art

Known beverage filter cartridges and cartridge holders are described in the above-referenced U.S. patents. The cartridge side walls are generally frustum-shaped and smooth and as such, do not provide a means of rotatably fixing and preferably also orienting the cartridges within the holders. This complicates and largely frustrates efforts to mark the cartridge side walls with coded indicia that can be reliably observed and interpreted by machine readers positioned within the brewers. Such indicia can be usefully processed by control systems designed, for example, to vary the amount and/or flow rate of liquid being dispensed, depending on the type of beverage medium being brewed.

More recently developed cartridges of the type disclosed for example in the above-referenced patent applications include side walls with surface irregularities that can be mechanically engaged to rotatably immobilize and orientate the cartridges within the holders.

SUMMARY OF THE INVENTION

The principal objective of the present invention is the provision of a cartridge holder having internal surfaces or components configured and arranged to coact in mechanical interengagement with surface irregularities in the cartridge side walls to rotatably fix the cartridges within the holder.

A companion objective of the present invention is to also achieve a predetermined and repeatable orientation of the cartridges within the holders.

The holder of the present invention is designed for use in an apparatus for brewing a beverage by infusing heated liquid with a beverage medium contained in a single serve disposable cartridge. In one embodiment of the present invention, the holder is configured for use within a cartridge having an inverted frustum-shaped side wall specially contoured to provide at least one and preferably a plurality of strategically placed surface irregularities. The cartridge is removably received in a cup-shaped housing having a side wall configured and dimensioned to surround the cartridge side wall. Locating elements are arranged to coact with the one or plural surface irregularities in the cartridge side wall to rotatably immobilize the cartridge within the housing. A lid is mounted for manipulation between an open position accommodating insertion and removal of the cartridge, and a closed position confining the cartridge within the housing. Tubular probes associated with the lid and housing are arranged to pierce the thus confined cartridge to thereby accommodate a through flow of heated liquid for infusion with the beverage medium contained in the cartridge.

Preferably, the plural surface irregularities coact with the locating elements to not only rotatably fix the cartridge, but also to achieve a predetermined and repeatable orientation of the cartridge within the housing.

In other embodiments of the present invention the interior surface of the housing is contoured to coact in mechanical interengagement with the surface irregularities in the cartridge side wall.

These and other objectives, features and advantages of the present invention will now be described in greater detail with reference to the accompanying drawings, wherein:

BRIEF DESCRIPTION OF THE DRAWINGS

FIG. **1** is a perspective view of a brewing chamber for a single serve beverage brewer embodying a cartridge holder in accordance with one embodiment of the present invention;

FIGS. **2**A–**2**D are side views of the cartridge holder at successive stages during the brewing cycle;

FIG. **3** is an exploded view of some of the basic components of the cartridge holder;

FIG. **4** is a top plan view of the cartridge holder housing;

FIG. **5** is an isometric view of the housing portion of the cartridge holder;

FIG. **6** is an exploded perspective view of an alternative embodiment of a cartridge holder in accordance with the present invention;

FIG. **7** is a side elevational view of a beverage filter cartridge having surface irregularities in its side wall;

FIG. **8**A is a sectional view taken along line **8**A—**8**A of FIG. **7**;

FIGS. **8**B and **8**C are sectional views similar to FIG. **8**A showing different cartridge side wall configurations;

FIG. **9** is an exploded perspective view of still another embodiment of a cartridge holder in accordance with the present invention;

FIG. **10** is a top plan view of the cartridge holder shown in FIG. **9**; and

FIG. **11** is a sectional view taken along line **11**—**11** of FIG. **10**.

DETAILED DESCRIPTION OF THE INVENTION

With reference initially to FIG. **1**, a brewing chamber for a single serve beverage brewer is shown at **20**. The brewing chamber **20** includes a slidable drawer **22** comprising side panels **24**, **26** that each include a mounting hole (not shown), which serve to pivotally mount the housing **28** of a beverage filter cartridge holder in the slidable drawer **22**. The drawer **22** slides horizontally along track assembles **32**, **34**.

The cartridge holder also includes a vertically moveable lid **40** that is manipulated by a linkage yoke **38** (partially shown), driven by an electric motor **37** through a pinion

driven rack **39**. The lid **40** is guided along vertical tracks **42**, **44** between a raised ready position and a lowered beverage brewing position coacting with the housing. In the ready position, the lid **40** is positioned above and separated from the housing **28**, assuming of course that the slidable drawer **22** is in the closed position. The housing **28** defines a chamber **36**, and includes cartridge ejection arms **46**, **48** that support and position a beverage cartridge within the holder.

A typical beverage filter cartridge is depicted ay **50** in FIGS. **7** and **8**A. The cartridge includes a cup-shaped base **51** having an inverted frustum-shaped side wall interrupted by surface irregularities indicated typically at **52** and comprising circumferentially spaced grooves. The cup-shaped base is closed by a lid **53**. As herein employed, the term "surface irregularity" is intended to broadly encompass any deviation from a smooth surface than can mechanically interengage with adjacent components or surfaces of the housing **28**. Non limiting examples of such surface irregularities may comprise a uniform array of grooves as shown in FIG. **8**A, or pairs of oppositely disposed grooves **52***a* in the side wall of a cartridge **50***a* as shown in FIG. **8**B, or a single surface irregularity such as the outwardly projecting rib **54***b* in the side wall of cartridge **50***b* as shown in FIG. **8**C.

With reference to FIG. **3**, it will be seen that the housing **28** has a circular bottom **80** through which protrudes an upwardly extending hollow exit probe **84**. A slidable cartridge platform **86** has a bore **88** aligned with the upwardly extending probe **84**. The cartridge ejection arms **46**, **48** project upwardly from and are formed integrally with the cartridge platform **86**.

A spring **92** is interposed between the housing bottom **80** and the slidable cartridge platform **86**. Depending latch members **94** on to the slidable cartridge platform **86** pass through the spring **92** and through an opening **96** centered in the housing bottom **80**. The latch members **94** include radially projecting teeth **98** which interengage with the edge of opening **96** to thereby limit vertical axial movement of the cartridge platform **86** with respect to the housing bottom.

The housing **28** has a side wall **100** extending upwardly from the bottom **80** to define chamber **36**. The side wall **100** is configured and dimensioned to closely surround the side wall of a beverage filter cartridge **50** received in the chamber **36**. The sidewall **100** includes first and second guide channels **104**, **105** configured and arranged to receive the cartridge ejection arms **46**, **48** respectively, allowing the slidable cartridge platform **86** to move vertically within the chamber **36**. The cartridge ejection arms **46**, **48** include first ends **106**, **107** integrally joined to the slidable cartridge platform **86**, and second end surfaces **108**, **110** that are arranged to contact and support a radially outwardly protruding lip **53**' of the cartridge **50**. The cartridge ejection arms **46**, **48** also include inwardly protruding locking ribs **300**, **301** respectively that mate and interengage with the surface irregularities **52** in the side wall of the beverage filter cartridge. This feature limits rotational movement of the beverage filter cartridge within the holder, and to a limited extent, also serves to orient the cartridge within the holder. It will be seem from FIG. **8**B that the cartridge side wall may alternatively be provided with only two oppositely disposed grooves **52***a*, each being configured to coact with a respective one of the locking ribs **300**, **301** to further limit the orientation of the cartridge within the holder.

As shown in FIG. **8**C, orientation can be still further limited by providing the cartridge side wall with a single surface irregularity, e.g., one outwardly projecting rib **52***b* arranged to coact with only a single complimentary groove **300**' in one of the ejection arms, This arrangement limits the manner in which the cartridge may be inserted to a single repeatable orientation.

The holder also includes shock absorbing members **112**, **114** (e.g., made of rubber) that rest on a ledge **116** of the sidewall **100** and support a compliance ring **117**. The shock absorbing members **112**, **114** have a height dimension **118** that positions the upper rim of the compliance ring slightly above the upper rim of housing **28** when no downward force is being applied to the ring. The function of the shock absorbing members **112**, **115** and the compliance ring **117** shall be discussed hereinafter.

The housing **28** has a pair of radially outwardly extending trunnions **120**, **122** that pivotally support the housing within the slidable drawer **22**, and pawls **124**, **125** that are used to manipulate the housing about the axis of the trunnions.

FIGS. **4** and **5** are top plan and isometric views, respectively, showing the above described components assembled within the housing **28**.

A typical brewing cycle is illustrated in FIGS. **2**A–**2**D. Beginning with FIG. **2**A, the lid **40** is elevated above the housing **28**, and a cartridge **50** is received in the housing chamber **36**. The lip **53**' of the cartridge lid **53** is supported in the upper surfaces **108**, **110** of the cartridge ejection arms **46**, **48**. An inlet probe **126** carried by the lid **40** is located over the cartridge lid **53**.

In FIG. **2**B, the lid **40** has been lowered, resulting in the cartridge **50** and the cartridge platform **86** being forced downwardly against the action of spring **92**. As a result, the cartridge lid and base are pierced respectively by the inlet and outlet probes **126**, **84**, thus accommodating a flow of heated liquid through the cartridge. The heated liquid infuses a beverage medium (not shown) contained in the cartridge to thereby produce a beverage which exits the cartridge via the outlet probe **84**.

As shown in FIG. **2**C, at the conclusion of the brewing cycle, the lid **40** is raised, and hooks **160** on legs **130** depending from the lid engage the pawls **125**, causing the housing **28** to rotate to a discharge position at which the spent cartridge is ejected. Cartridge ejection is assisted by the spring loaded ejection arms **46**, **48**. The housing **28** is then returned to its original "ready" position as shown in FIG. **2**D.

FIG. **6** illustrates an alternative embodiment of a cartridge holder in which the side wall of the housing **28** is provided with internal grooves **300**" configured and arranged to slidably receive and coact in mechanical interengagement with externally projecting ribs **52***c* in the side wall of cartridge **50***c*

Still another embodiment of a cartridge holder is illustrated in FIGS. **9**–**11**. The cartridge **50***d* is of the type described in the above-referenced patent application Ser. No. 09/782,660, with generally flat side walls diverging upwardly from a bottom to a top opening closed by a lid **53***a*. Oppositely facing side walls are provided with surface irregularities in the form of protruding somewhat triangular-shaped bosses **52***d*.

The housing **28** is similarly configured, with oppositely facing side walls provided with internal triangular-shaped recesses **301**. When the cartridge **50***d* is received in the housing **28**, and the lid **40** is closed as shown in FIG. **11**, the cartridge is pushed downwardly against the biasing action of spring **92** resulting in the cartridge bottom and lid being pierced, respectively, by inlet and outlet probes **126**, **84**.

The recesses **301** in the housing side walls coact with the bosses **52***d* in the cartridge side wall to orientate the cartridge within the housing in one of two possible positions.

It is contemplated that the housings may be mounted such that they do not pivot to automatically eject the cartridges at the end of the brewing cycle, thus requiring users to manually remove the used cartridges. The holder may also employ multiple inlet probes to increase liquid distribution within the cartridge. The inlet probes also may have different heights to improve saturation of the beverage medium within the cartridge. It is also contemplated that the brewer may include a control system for automatically determining the type of cartridge (e.g., the beverage medium within the cartridge) and adjust the brewing cycle accordingly. This may include providing machine readable data such as bar codes, data matrixes, dielectric encoding, etc, on a portion of the cartridge exterior accessible to a corresponding reader in the brewer.

Although the present invention has been shown and described with respect to several preferred embodiments thereof, various changes, omissions and additions to the form and detail thereof, may be made therein, without departing from the spirit and scope of the invention.

We claim:

1. In an apparatus for brewing a beverage by infusing heated liquid with a beverage medium contained in a single serve disposable cartridge, a holder for containing said cartridge, said holder comprising:

a cup-shaped housing for removably receiving said cartridge, said housing having a side wall configured and dimensioned to surround a side wall of said cartridge;

locating means for rotabaly fixing said cartridge in said housing, said locating means comprising at least one projection in one of the side walls of said cartridge and housing, said projection being configured and dimensioned to coact in mechanical interengagement with a complimentary depression in the other of said side wall;

a lid;

means for manipulating said lid between an open position accommodating insertion of a cartridge into and removal of a cartridge from said housing, and a closed position confining a cartridge within said housing; and

probe means associated with said housing and said lid for piercing a cartridge confined within said housing to accommodate a through flow of heated liquid for infusion with said beverage medium.

2. The holder as claimed in claim **1** wherein said probe means includes a tubular inlet probe carried by said lid, and a tubular outlet probe carried by said housing.

3. The holder as claimed in claim **2** further comprising ejection means shiftable with respect to the side wall of said housing for ejecting a cartridge from the housing interior.

4. The holder as claimed in claim **3** wherein said locating means comprises a part of said ejection means.

5. In an apparatus that operates during a brewing cycle to brew a beverage by combining heated liquid with a beverage medium contained in a single serve disposable cartridge, a holder for containing the cartridge during the brew cycle, said holder comprising:

a cup-shaped housing having a bottom wall and a side wall, said housing being structured and dimensioned to removably received said cartridge;

a lid for confining said cartridge within said housing;

locating means comprising at least one projection in one of the side walls of said cartridge and housing, said projection being configured and dimensioned to coact in mechanical interengagement with a complimentary depression in the other of said side walls to resist rotation of said cartridge within said housing; and

means associated with said housing and said lid for piercing said cartridge to accommodate a flow of said heated liquid through said cartridge to brew said beverage by infusion with said beverage medium.

6. In an apparatus for brewing a beverage by infusing heated liquid with a beverage medium contained in a single serve disposable cartridge, a holder for containing said cartridge, said holder comprising:

a cup-shaped housing for removably receiving said cartridge, said housing having a side wall configured and dimensioned to surround the side wall of said cartridge;

locating means for coacting in interengagement with said surface irregularity to rotatably fix a cartridge received in said housing;

a lid;

means for manipulating said lid between an open position accommodating insertion of a cartridge into and removal of a cartridge from said housing, and a closed position confining a cartridge within said housing; and

probe means for piercing a cartridge confined within said housing to accommodate a trhough flow of heated liquid for infusion with said beverage medium said probe means including a tubular inlet probe carried by said lid and a tubular outlet probe carried by said housing; and

ejection means shiftable with respect to the side wall of said housing of ejecting a cartridge from the housing interior.

* * * * *