Deep Drawing

Revised by Mahmoud Y. Demeri, FormSys, Inc.

DEEP DRAWING of sheet metal is used to form parts by a process in which a flat blank is constrained by a blankholder while the central portion of the sheet is pushed into a die opening with a punch to draw the metal into the desired shape without causing wrinkles or splits in the drawn part. This generally requires the use of presses having a double action for hold-down force and punch force. The mechanics of deep drawing of a conical cup are illustrated in Fig. 1, which shows the complexity of the process. Deep drawing involves many types of forces and deformation modes, such as tension in the wall and the bottom, compression and friction in the flange, bending at the die radius, and straightening in the die wall. The process is capable of forming beverage cans, sinks, cooking pots, ammunition shell containers, pressure vessels, and auto body panels and parts. The term *deep drawing* implies that some drawing-in of the flange metal occurs and that the formed parts are deeper than could be obtained by simply stretching the metal over a die. Clearance between the male punch and the female die is closely controlled to minimize the free span so that there is no wrinkling of the sidewall. This clearance is sufficient to prevent ironing of the metal being drawn into the sidewall of the drawn part. If ironing of the walls is to be part of the process, it is done in operations subsequent to deep drawing.

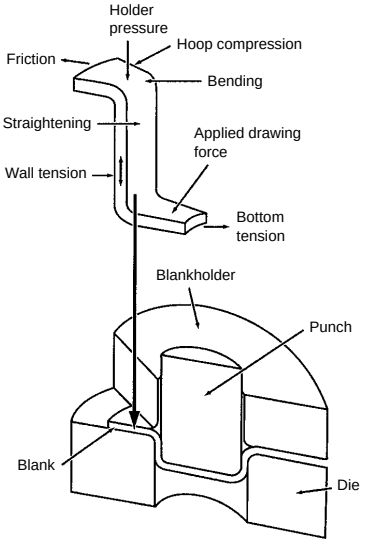

Fig. 1 Mechanics of the deep drawing of a cylindrical cup

Suitable radii in the punch bottom to side edge, as well as the approach to the die opening, are necessary to allow the sheet metal to be formed without tearing. In most deep-drawing operations, the part has a solid bottom to form a container and a retained flange that is trimmed later in the processing. In some cases, the cup shape is fully drawn into the female die cavity, and a straight-wall cup shape is ejected through the die opening. To control the flange area and to prevent wrinkling, a hold-down force is applied to the blank to keep it in contact with the upper surface of the die. Presses used for deep-drawing operations can be either hydraulic or mechanical, but hydraulic presses are preferred because of better control of the rate of punch travel.

Any metal that can be processed into sheet form by a cold-rolling process should be sufficiently ductile to be capable of deep drawing. Both hot- and cold-rolled sheet products are used in deep-drawing processes. The cold-work effects introduced during processing of the sheet products for deep-drawing applications must be removed (by annealing, for example), and the as-delivered coils should be free of any aging. This would imply that aluminum-killed drawing-quality steel, for example, would be preferred over rimmed steel. After the deep-drawing operation, ductility can be returned to that of the original sheet by in-process annealing, if necessary. In many cases, however, metal that has been deep drawn in a first operation can be further reduced in cup diameter by additional drawing operations, without the need for intermediate annealing.

The properties considered to be important in sheet products designed for deep drawing include:

- Composition, with a minimum amount of inclusions and residual elements contributing to better drawability
- Mechanical properties, of which the elongation as measured in a tension test, the plastic-strain ratio r (see the section "Drawability" in this article), and the strain-hardening exponent n are of primary importance. The strength of the final part as measured by yield strength must also be considered, but this is more a function of the application than forming by deep drawing.
- Physical properties, including dimensions, die geometry, modulus of elasticity, and any special requirements for maintaining shape after forming

Once a metal has been deep drawn into a suitable form, it can be further processed to develop additional shape. The first shape is usually a round cylinder, or a modification of this—a square box with rounded corners, for example. This latter shape is related to the cylinder in that the four corners are essentially quarter segments with straight walls between each segment.

For small cylinders, a relationship between the diameter of a circular blank and the bottom diameter of the cup shape to be formed is sometimes used to measure deep drawability. The most commonly referred to cup test for deep drawing is the Swift cup test, which uses a 2 in. (50 mm) diameter flat-bottomed punch to form test blanks. For ductile low-carbon steel, aluminum, and brass sheets, a 100 mm (4 in.) circular blank can be formed in a single draw. Increased plastic strain ratio r and ductility allow larger blanks to be drawn successfully; the limit is reached when the bottom punches out, rather than forming a cup shape. The blank diameter divided by the punch diameter gives the limiting draw ratio (LDR), which for the previous examples would be 2. More information on the Swift cup test is available in the article "Formability Testing of Sheet Metals" in this Volume.

Of the commonly formed metals, brass and austenitic stainless steels show high limiting draw ratios (up to 2.25). A few samples have reached a value of 2.5 to produce a cup with a sidewall height of nearly 65 mm (2.5 in.). This is possible, although the total length of the cup cross section would be 180 mm (7 in.), which is more than the blank diameter because of the deep-drawing forces. The interstitial-free steels,

Downloaded from http://dl.asminternational.org/handbooks/book/chapter-pdf/246068/a0005121.pdf
by Michael Jobin
on 18 December 2020

which have average r values of 2.5 or higher, can be deep drawn to limiting draw ratios near 2.5. With these extremely deep draws, sidewall delayed splitting must be prevented by such means as stress-relief annealing immediately following the drawing operation.

The thickness of the work metal does not change appreciably in deep drawing; therefore, the surface area of the final part is approximately the same as that of the initial blank. As the metal in the flange area is drawn into the die opening over the approach radius, it is subjected to radial tension and, concurrently, to circumferential compression. This explains why a 125 mm (5 in.) diameter blank with a surface area of 126 cm^2 (19.6 $in.^2$) can form a cup shape 65 mm (2.5 in.) deep that has a total surface area of approximately 121 cm^2 (18.8 $in.^2$).

With proper balance among the punch force, the hold-down force, and the strength of the sheet metal being formed, a cup shape can be developed. At the start of this process, the metal in the free area between the punch bottom and the flange hold-down is stretched and wrapped over the nose of the punch and the approach radius of the die. During this stretching, strain hardening strengthens the metal. If it is not capable of such strengthening or if its strength at any location is exceeded at any time during the forming, the bottom of the cup shape will break out. Contributing to this strengthening is a high r value, which is a measure of resistance to through-thickness changes in the sheet metal. If the metal has a high resistance to thinning and thickening, the bottom radius and the upper sidewall areas remain close to their original thickness, and the radial and circumferential strains obtainable in the drawn-in flange are increased to accommodate the deep-drawing process.

After the bottom has been formed, the clearance between the punch and die is such that the metal in the cup side is free to move without excessive rubbing on the die walls. It has been found that slight roughening of the punch radius and minimizing the lubrication of this area contribute to deeper drawability; however, the die opening should be smooth and well lubricated with a suitable drawing compound.

Fundamentals of Drawing

A flat blank is formed into a cup by forcing a punch against the center portion of a blank that rests on the die ring. The progressive stages of metal flow in drawing a cup from a flat blank are shown schematically in Fig. 2. During the first stage, the punch contacts the blank (Fig. 2a), and metal section 1 is bent and wrapped around the punch nose (Fig. 2b). Simultaneously and in sequence, the outer sections of the blank (2 and 3, Fig. 2) move radially toward the center of the blank until the remainder of the blank has bent around the punch nose and a straight-wall cup is formed (Fig. 2c and d). During drawing, the center of the blank (punch area, Fig. 2a) is essentially unchanged as it forms the bottom of the drawn cup. The areas that become the sidewall of the cup (1, 2, and 3, Fig. 2) change from the shape of annular segments to longer parallel-side cylindrical elements as they are drawn over the die radius. Metal flow can occur until all the metal has been drawn over the die radius, or a flange can be retained.

A blankholder is used in a draw die to prevent the formation of wrinkles as compressive action rearranges the metal from flange to sidewall. Wrinkling starts because of some lack of uniformity in the movement or because of the resistance to movement in the cross section of the metal. This happens because metal under compression has a great resistance to flow into the die cavity. A blankholder force sufficient to resist or compensate for this nonuniform movement prevents wrinkling. Once a wrinkle starts, the blankholder is raised from the surface of the metal so that other wrinkles can form easily. The force needed to hold the blank flat during drawing of cylindrical shells varies from practically zero for relatively thick blanks to approximately one-third of the drawing load for a blank 0.76 mm (0.030 in.) thick. Thinner blanks often require proportionally greater blankholder force.

Conditions for drawing without a blankholder depend on the ratio of the supported length of the blank to its thickness, the amount of reduction from blank diameter to cup diameter, and the ratio of blank diameter to stock thickness. For thick sheets, the maximum reduction of blank diameter to cup diameter in drawing without a blankholder is approximately 25%. This ratio approaches zero for thin foillike sheet. If a blankholder is employed, the maximum reduction is increased to approximately 50% for metals of maximum drawability and 25 to 30% for metals of marginal drawability in the same equipment. More information on the effect of blank thickness on drawing is in the article "Design for Sheet Forming" in this Volume.

Drawability

In an idealized forming operation, that is, one in which drawing is the only deformation process that occurs, the blankholder force is just sufficient to permit the sheet material to flow radially into the die cavity without wrinkling. Deformation takes place in the flange and over the lip of the die. No deformation occurs over the nose of the punch. The deep-drawing process can be thought of as analogous to wire drawing in that a large cross section is drawn into a smaller cross section of greater length.

The drawability of a metal depends on two factors:

- The ability of the material in the flange region to flow easily in the plane of the sheet under shear
- The ability of the sidewall material to resist deformation in the thickness direction

The punch prevents sidewall material from changing dimensions in the circumferential direction; therefore, the only way the sidewall material can flow is by elongation and thinning. Thus, the ability of the sidewall material to withstand the load imposed by drawing down the flange is determined by its resistance to thinning, and high flow strength in the thickness direction of the sheet is desirable.

Taking both of these factors into account, it is desirable in drawing operations to maximize material flow in the plane of the sheet and to maximize resistance to material flow in a direction perpendicular to the plane of the sheet. Low flow strength in the plane of the sheet is of little value if the work material also has low flow strength in the thickness direction.

The flow strength of sheet metal in the thickness direction is difficult to measure, but the plastic-strain ratio r compares strengths in the plane and thickness directions by determining true strains in these directions in a tension test. For a given metal strained in a particular direction, r is a constant expressed as:

$$r = \varepsilon_w / \varepsilon_t \qquad \text{(Eq 1)}$$

where ε_w is the true strain in the width direction, and ε_t is the true strain in the thickness direction. Sheet metal is anisotropic; that is, the properties of the sheet are different in different directions. It is, therefore, necessary to use the average of the strain ratios measured parallel to, transverse to, and 45° to the rolling direction of the sheet to obtain an average strain ratio $\bar{r}$, which is expressed as:

$$\bar{r} = r_L + 2r_{45} + r_T / 4 \qquad \text{(Eq 2)}$$

where r_L is the strain ratio in the longitudinal direction, r_{45} is the strain ratio measured at 45° to the rolling direction, and r_T is the strain ratio in the transverse direction.

If flow strength is equal in the plane and thickness directions of the sheet, $\bar{r} = 1$. If strength in the thickness direction is greater than average strength in the directions in the plane of the sheet, $\bar{r} > 1$. In this latter case, the material resists uniform thinning. Generally, the higher

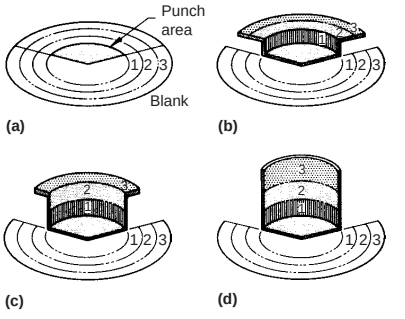

Fig. 2 Progression of metal flow in drawing a cup from a flat blank

Downloaded from http://dl.asminternational.org/handbooks/book/chapter-pdf/246068/a0005121.pdf
by Michael Jobin
on 18 December 2020

the $\bar{r}$ value, the deeper the draw that can be achieved (Fig. 3).

Because the average strain ratio $\bar{r}$ gives the ratio of average flow strength in the plane of the sheet to average flow strength normal to the plane of the sheet, it is a measure of normal anisotropy. Variations of flow strength in the plane of the sheet are termed planar anisotropy. The variation in strain ratio in different directions in the plane of the sheet, $\bar{r} > 1$, is a measure of planar anisotropy, and $\bar{r}$ can be expressed as:

$$\bar{r} = r_L + 2r_{45} = r_T/4 \quad \text{(Eq 3)}$$

where r_L is the variation in strain ratio, and the other terms are as defined in Eq 2.

A completely isotropic material would have $\bar{r} = 1$ and $\Delta r = 0$. These two parameters are convenient measures of plastic anisotropy in sheet materials. More information on formability is available in the article "Formability Testing of Sheet Metals" in this Volume.

Drawing Ratios. Drawability can also be expressed in terms of a limiting draw ratio or percentage of reduction based on results of Swift cup testing (see the article "Formability Testing of Sheet Metals" in this Volume). The limiting draw ratio is the ratio of the diameter D of the largest blank that can be successfully drawn to the diameter of the punch d:

$$\text{LDR} = \frac{D}{d} \quad \text{(Eq 4)}$$

Percentage of reduction would then be defined as:

$$\text{Percentage of reduction} = \frac{100(D-d)}{D} \quad \text{(Eq 5)}$$

Additional information on formability testing and other measures of formability is available in the article "Formability Testing of Sheet Metals" in this Volume.

Defects in Drawing

A number of defects may occur in deep-drawn parts. Figure 4 shows the type of defects that may be found after drawing cylindrical cups. The following is a description of such defects:

- *Earing:* Occurs in deep-drawn parts made from anisotropic materials. Because of planar anisotropy, the sheet metal may be stronger in one direction than in other directions in the plane of the sheet. This causes the formation of ears in the upper edge of a deep-drawn cup even when a circular blank is used. In practice, enough extra metal is left on the drawn cup so that the ears can be trimmed.
- *Wrinkling in the flange:* Wrinkling in deep-drawn parts consists of a series of ridges that form radially in the flange due to compressive forces.
- *Wrinkling in the wall:* Occurs when ridges in the flange are drawn into the vertical wall of the cup
- *Tearing:* Occurs near the base of the drawn cup and results from high stresses in the vertical wall that cause thinning and failure of the metal at that location
- *Surface scratches:* Occur in a drawn part if the punch and die surfaces are not smooth or if lubrication is not enough

Presses

Sheet metal is drawn in either hydraulic or mechanical presses. Double-action presses are required for most deep drawing because a more uniform blankholding force can be maintained for the entire stroke than is possible with a spring-loaded blankholder. Double-action hydraulic presses with a die cushion are often preferred for deep drawing because of their constant drawing speed, stroke adjustment, and uniformity of clamping pressure. Regardless of the source of power for the slides, double-action straight-side presses with die cushions are best for deep drawing. Straight-side presses provide a wide choice of tonnage capacity, bed size, stroke, and shut height.

Factors in Press Selection

Drawing force requirements, die space, and length of stroke are the most important considerations in selecting a press for deep drawing. The condition of the crankshaft, connection bearings, and gibs is also a factor in press selection.

Drawing Force. The required drawing force, as well as its variation along the punch stroke, can be calculated from theoretical equations based on plasticity theory or from empirical equations. The maximum drawing force $F_{d,max}$ required to form a round cup can be expressed by the following empirical relation:

$$F_{d,max} = n\pi d t s_u \quad \text{(Eq 6)}$$

where s_u is the tensile strength of the blank material (in pounds per square inch or megapascals), d is the punch diameter (in inches or millimeters), t is the sheet thickness (in inches or millimeters), and $n = s_D/s_u$, the ratio of drawing stress to tensile strength of the work material. Equation 6 would yield $F_{d,max}$ in either pounds or kilonewtons, depending on the other units used.

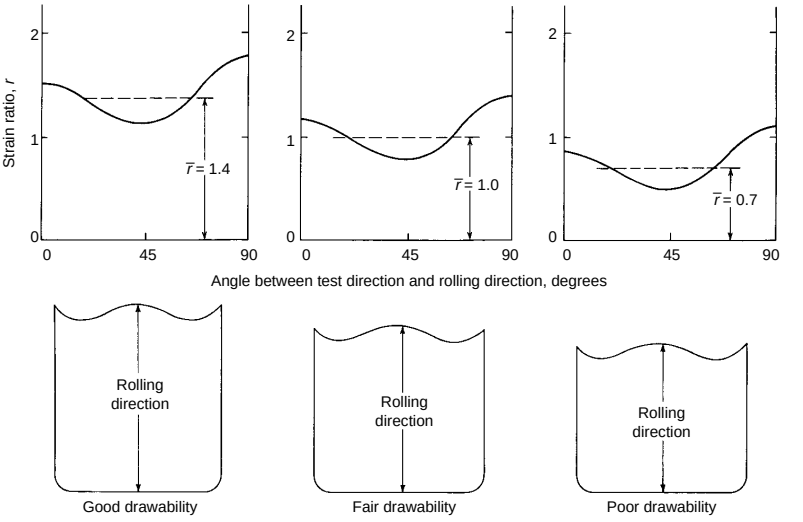

Fig. 3 Variation of strain ratio r with direction in low-carbon steel (top curves) and effect of average strain ratio $\bar{r}$ on drawability of cylindrical cups (bottom). Each cup represents the deepest cup that can be drawn from material with the indicated $\bar{r}$.

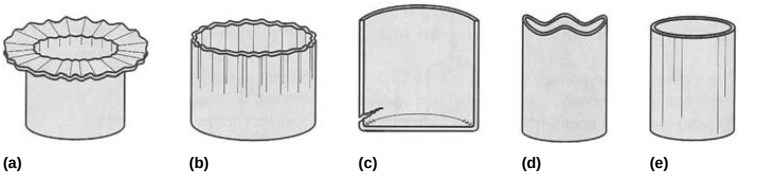

Fig. 4 Defects in deep-drawn cylindrical cups. (a) Flange wrinkling. (b) Wall wrinkling. (c) Tearing. (d) Earing. (e) Surface scratches

Downloaded from http://dl.asminternational.org/handbooks/book/chapter-pdf/246068/a0005121.pdf
by Michael Jobin
on 18 December 2020

The drawing force required to form a round shell can be estimated using Fig. 5. The nomograph shown in Fig. 5 is based on, first, a free draw with sufficient clearance so that there is no ironing and, second, on a maximum reduction of approximately 50% (note also that only English units of measure are used). Figure 5 gives the load required to fracture the cup or the tensile strength of the work metal near the bottom of the shell. An example of its use is the determination of the force required for deep drawing 0.125 in. thick steel stock with a tensile strength of 50,000 psi into a shell 10 in. in diameter:

- Using line 1, connect point 10 on scale 2 to point 0.125 on scale 4.
- Line 1 intersects scale 3 at 4.0, which is the approximate cross-sectional area (in.^{2}) of the shell wall.
- Connect this point using line 2 to point 50,000 on scale 1.
- Project a line to the right to intersect scale 5 at 98 tons, which is the required drawing force.

The force required to draw a rectangular cup can be calculated using Eq 7:

$$F_{d,max} = ts_u\ (2\pi Rk_a + Lk_b) \qquad \text{(Eq 7)}$$

where R is the corner radius of the cup (in inches), L is the sum of the lengths of straight sections of the sides (in inches), k_a and k_b are constants, and the other quantities are as defined in Eq 6. Values for k_a range from 0.5 for a shallow cup to 2.0 for a cup with a depth five to six times the corner radius; k_b values range from 0.2 (for easy draw radius, ample clearance, and no blankholder force) to a maximum of 1.0 (for metal clamped too tightly to flow).

When blankholder cylinders are mounted on the main slide of the press, the blankholder force must be added to the calculated drawing force. When a die cushion is used to eject workpieces, the main slide works against this force; therefore, such setups require more drawing force than would be calculated using Eq 6 or 7.

In toggle draw presses, the blankholder force is taken on the rocker shaft bearings in the press frame, so that the crankshaft bearings sustain only the drawing load. In other types of presses, both the drawing and blankholding loads are on the crankshaft, and allowances are made when computing press capacity. For round work, the allowance for blankholding should be 30 to 40% of the drawing force. For large rectangular work, the drawing force is relatively lower than that for round work, but the blankholding force may be equal to the drawing force. Where stretching is involved and the blank must be gripped tightly around the edge (and a draw bead is not permissible), the blankholding force may be two or three times the drawing force.

Blank size governs the size of the blankholder surfaces. Some presses with sufficient force cannot be considered for deep drawing, because the bed size and shut height are inadequate. Blank size is determined by calculating the surface area of the part and then converting this area into a flat blank. For a deep-drawn round cup, the surface area of the cup is converted into a flat blank diameter.

Draw Depth. The length of stroke and the force required at the beginning of the working portion of the stroke are both important considerations. Parts that have straight walls can often be drawn through the die cavity and then stripped from the punch and ejected from the bottom of the press. Even under these ideal conditions, the minimum stroke will be equal to the sum of the length of the drawn part, the radius of the draw die, the stock thickness, and the depth of the die to the stripping point, in addition to some clearance for placing the blank in the die.

Workpieces with flanges or tapered walls must be removed from the top of the die. In drawing these workpieces, the minimum press stroke is twice the length of the drawn workpiece, plus clearance for loading the die. In an automatic operation using progressive dies or transfer mechanisms, at least one-half the stroke must be reserved for stock feed, because the tooling must clear the part before feeding begins for the next stroke. For automatic operation, it is common practice to allow a press stroke of four times the length of the drawn workpiece. Therefore, some equipment is not suited to automatic operation, or it is necessary to use manual feed with an automatic unloader, or conversely, because of a shortage of suitable presses.

Slide Velocity. When selecting a press, it is also necessary to check slide velocity through the working portion of the stroke (see the section "Effect of Press Speed" in this article).

Means of Holding the Blank. Double-action presses with a punch slide and a blankholder slide are preferred for deep drawing. Single-action presses with die cushions (pneumatic or hydraulic) can be used but are less suitable for drawing complex parts. Draw beads are incorporated into the blankholder for drawing parts requiring greater restraint of metal flow than can be obtained by using a plain blankholder or for diverting metal flow into or away from specific areas of the part (see the section "Restraint of Metal Flow" in this article).

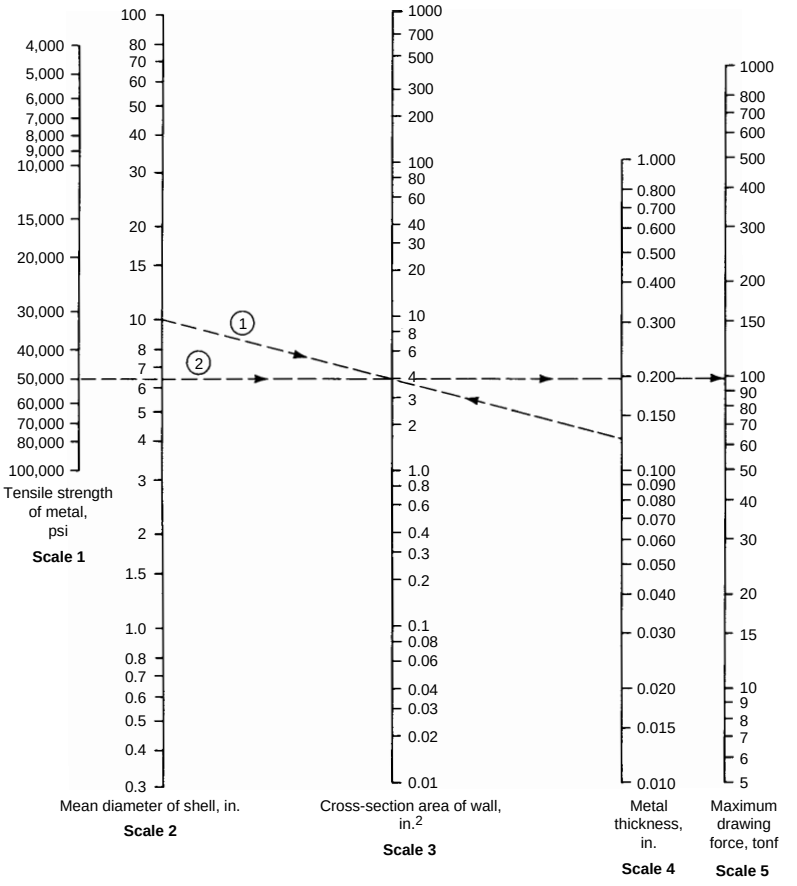

Fig. 5 Nomograph used for estimating drawing force based on several parameters. See text for description of use.

Downloaded from http://dl.asminternational.org/handbooks/book/chapter-pdf/246068/a0005121.pdf
by Michael Jobin
on 18 December 2020

Press Selection versus Availability. The ideal press equipment for a specific job is often not available. This makes it necessary to design tools and to choose product forms of work metal in accordance with available presses and supplementary equipment. For example, if available presses are not adequate for drawing large workpieces, the manufacturing sequence must be completely changed. It may be necessary to draw two sections and weld them together. In addition, operations that could otherwise be combined, such as blanking, piercing, drawing, and trimming, may have to be performed singly in separate presses.

On the other hand, some manufacturers have placed more than one die in a single press because of the availability of a large press and the shortage of smaller presses. This procedure can cause lower production because all blanks must be positioned before the press can be operated. However, storage of partly formed workpieces and additional handling between press operations are eliminated. Where several small dies are used to reduce overall tool cost, there is economic justification for the use of small-capacity presses. If small presses are not available, it is often more economical to use compound dies. This is particularly true if overall part production is likely to exceed original estimates.

The availability of auxiliary equipment may also influence the type of press and tooling used. For example, if equipment is available for handling coils, plans will be made accordingly. However, if coil-handling equipment is not available and straight lengths of sheet or strip are to be processed, a compatible tooling procedure must be used, even though it may not be the most economical procedure.

Dies

Dies used for drawing sheet metal are usually one of the following basic types or some modification of these types:

- Single-action dies
- Double-action dies
- Compound dies
- Progressive dies
- Multiple dies with transfer mechanism

Selection of the die depends largely on part size, severity of draw, and quantity of parts to be produced.

Single-action dies (Fig. 6a) are the simplest of all drawing dies and have only a punch and a die. A nest or locator is provided to position the blank. The drawn part is pushed through the die and is stripped from the punch by the counterbore in the bottom of the die. The rim of the cup expands slightly to make this possible. Single-action dies can be used only when the forming limit permits cupping without the use of a blankholder.

Double-action dies have a blankholder. This permits greater reductions and the drawing of flanged parts. Figure 6(b) shows a double-action die of the type used in a double-action press. In this design, the die is mounted on the lower shoe, the punch is attached to the inner or punch slide, and the blankholder is attached to the outer slide. The pressure pad is used to hold the blank firmly against the punch nose during the drawing operation and to lift the drawn cup from the die. If a die cushion is not available, springs or air or hydraulic cylinders can be used; however, they are less effective than a die cushion, especially for deep draws.

Figure 6(c) shows an inverted type of double-action die, which is used in single-action presses. In this design, the punch is mounted on the lower shoe; the die on the upper shoe. A die cushion can supply the blankholding force, or springs or air or hydraulic cylinders are incorporated into the die to supply the necessary blankholding force. The drawn cup is removed from the die on the upstroke of the ram, when the pinlike extension of the knockout strikes a stationary knockout bar attached to the press frame.

Compound Dies. When the initial cost is warranted by production demands, it is practical to combine several operations in a single die. Blanking and drawing are two operations commonly placed in compound dies. With compound dies, workpieces can be produced several times as fast as by the simple dies shown in Fig. 6.

Progressive Dies. The initial cost and length of bed needed for progressive dies usually limit their application to relatively small workpieces. Figure 7 shows a typical six-station progression for making small shelllike workpieces on a mass-production basis. However, larger parts, such as liners for automobile headlights, have been drawn in progressive dies.

The total number of parts to be produced and the production rate often determine whether or not a progressive die will be used when two or more operations are required. There are, however, some practical considerations that may rule against a progressive die, regardless of quantity:

- The workpiece must remain attached to the scrap skeleton until the final station, without hindering the drawing operations.
- Drawing operations must be completed before the final station is reached.
- In deep drawing, it is sometimes difficult to move the workpiece to the next station.
- If the draw is relatively deep, stripping is often a problem.
- The length of press stroke must be more than twice the depth of draw.

Assuming that a progressive die can be used to make acceptable drawn parts, cost per piece is usually the final consideration. Progressive-die drawing is generally considered to be economical if savings in material and labor can pay for the die in 1 year. Ordinarily, the savings achieved by the use of a progressive die results from decreased labor.

Multiple dies, in conjunction with transfer mechanisms, are often used instead of progressive dies for the mass production of larger parts. Multiple dies and transfer mechanisms are practical for a wider range of workpiece sizes than progressive dies are. Although the eyelet-type transfer method is the most widely used for making parts less than 25 mm (1 in.) in diameter, transfer dies are practical for much larger workpieces. The seven-station operation for making the 165 mm (6.5 in.) outside diameter cylindrical shell shown in Fig. 8 represents a typical sequence for the transfer-die method. The workpiece is mechanically transferred from one die to the next. One advantage of the transfer-die method, as opposed to the progressive-die method, is the greater flexibility permitted in processing procedure, mainly because in transfer dies the workpiece does not remain attached to the scrap skeleton during forming. Because of

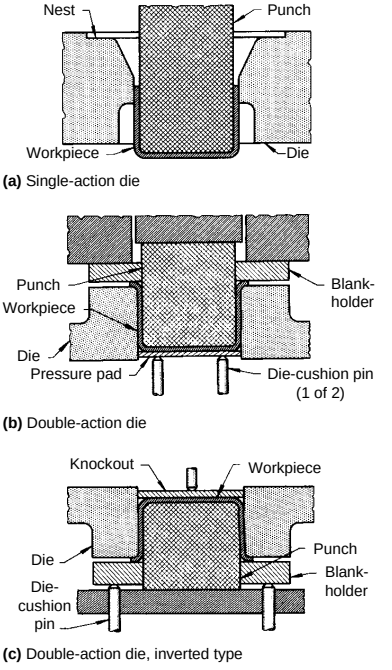

Fig. 6 Components of three types of simple dies shown in a setup used for drawing a round cup. See text for discussion.

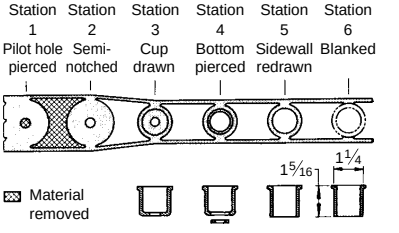

Fig. 7 Production of a small ferrule in a six-station progressive die. Dimensions given in inches

Downloaded from http://dl.asminternational.org/handbooks/book/chapter-pdf/246068/a0005121.pdf
by Michael Jobin
on 18 December 2020

this, precut blanks can be drawn by the transfer method.

Preforms can also be used as blanks. For example, oil pans for automobiles are blanked and partly drawn in a compound die and then finish formed, pierced, and trimmed by the transfer method. Dies for producing a given part usually cost more for the transfer-die method than for a separate-die operation but approximately the same as for a progressive-die operation. The cost of adapting the transfer unit to the part is not included in the die cost. Similarly, the production rate for the transfer method is usually greater than that for a single-die operation but 10 to 25% less than that for drawing in a progressive die. Many parts can be produced equally well by all of these methods. Under these conditions, tool cost, rate of production, and total quantity of parts to be drawn determine the choice of procedure.

Die and Punch Materials. The selection of material for dies and punches for drawing sheet metal depends on work metal composition, workpiece size, severity of the draw, quantity of parts to be drawn, and tolerances and surface finish specified for the drawn workpieces. To meet the wide range of requirements, punch and die materials ranging from polyester, epoxy, phenolic, or nylon resins to highly alloyed tool steels with nitrided surfaces, and even carbide, are used. Detailed information on tool materials is available in the articles "Selection of Materials for Press-Forming Dies" and "Selection of Materials for Deep-Drawing Dies" in this Volume.

Effects of Process Variables in Deep Drawing

The process parameters that affect the success or failure of a deep-drawing operation include punch and die radii, punch-to-die clearance, press speed, lubrication, and type of restraint of metal flow used (if any). Material variables, such as sheet thickness and anisotropy, also affect deep drawing. These are discussed in the section "Effects of Material Variables on Deep Drawing" in this article.

Effect of Punch and Die Radii

As the blank is struck by the punch at the start of drawing, it is wrapped around the punch and die radii; the stress and strain that develop in the workpiece are similar to those developed in bending, with an added stretching component. The bends, once formed, have the radii of the punch and die corners. The bend over the punch is stationary with reference to both punch and shell wall. The bend over the die radius, however, is continuously displaced with reference to both the punch radius and the blank, and it also undergoes a gradual thickening as the shell is drawn. The force required to draw the shell at the intermediate position has a minimum of three components:

- The force required for bending and unbending the metal flowing from the flange into the sidewall
- The force required for overcoming the frictional resistance of the metal passing under the blankholder and over the die radius
- The force required for circumferential compression and radial stretching of the metal in the flange

Because of the variation in metal volume and in resistance to metal flow, the punch force increases rapidly, passes through a maximum, and gradually decreases to zero as the edges of the flange approach and enter the die opening and pass into the shell wall. With the cup diameter remaining constant, the maximum press load and the length of stroke required to draw the cup depend on the size of the blank. The punch force-stroke relations for drawing blanks of various diameters from brass sheet 1.5 mm (0.060 in.) thick, using a 50 mm (2 in.) diameter punch, are shown in Fig. 9.

Under the conditions shown in Fig. 9, during cupping, the shell bottom is subjected to tensile stress in all directions, while the lower portions of the shell wall, particularly the radiused portion connecting the bottom with the wall, are primarily subjected to longitudinal tension. The stress in the metal being drawn into the shell wall consists of combined compressive and tensile stresses. Separation of the shell bottom from the wall is likely if a reduction is made that requires a force greater than the strength of the shell wall near the bottom (Fig. 9).

The punch and die radii and percentage of reduction determine the load at which the bottom of the shell is torn out. Drawing is promoted by increasing punch and die radii. For a given drawing condition, the punch force needed to move the metal into the die decreases as the die radius increases, as shown in Fig. 10.

The reduction of drawing force in a double-action die by modification of the effective die radius can be accomplished in two convenient ways, as shown in Fig. 11. In the conical lead-in die (Fig. 11a), the cutout is effective in reducing

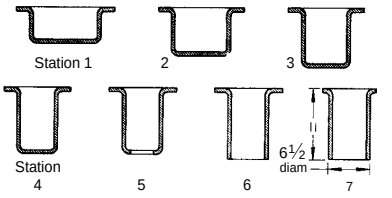

Sequence of operations : 1 – Cup. 2 – Redraw. 3 – Redraw. 4 – Redraw. 5 – Pierce bottom. 6 – Extrude bottom. 7 – Trim flange.

Fig. 8 Seven-station drawing and piercing of a cylindrical part in a multiple die and transfer mechanism. Dimensions given in inches

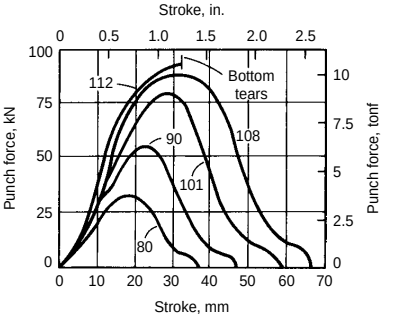

Fig. 9 Force-stroke relations for drawing blanks of various diameters from 1.5 mm (0.060 in.) thick alloy C27400 (yellow brass, 63%) sheet using a 50 mm (2 in.) diameter punch. Numbers indicate blank diameter in millimeters.

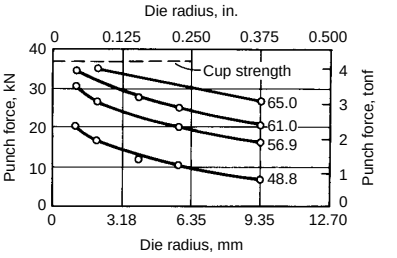

Fig. 10 Effect of die radius on punch force required for cupping various diameters of 1 mm (0.040 in.) thick alloy C27400 (yellow brass, 63%) blanks using a 30.5 mm (1.2 in.) diameter punch with a nose radius of 0.61 mm (0.024 in.). Numbers indicate blank diameter in millimeters.

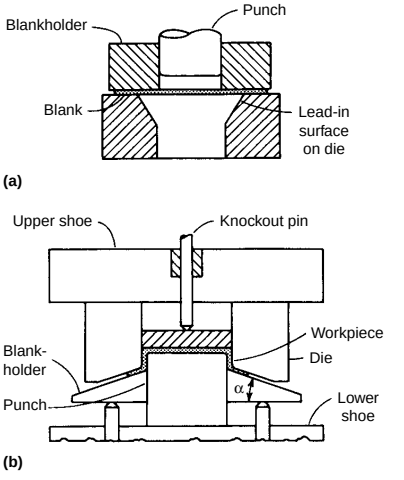

Fig. 11 Two ways of reducing the required drawing forces. (a) Conical lead-in die. (b) Conical blankholder. See text for details.

Downloaded from http://dl.asminternational.org/handbooks/book/chapter-pdf/246068/a0005121.pdf
by Michael Jobin
on 18 December 2020

frictional loads by removal of the portions of the die surface that are usually heavily loaded and increase friction. In Fig. 11(b), the sheet metal is formed into a conical shape before appreciable drawing begins. This has the effect of reducing the area of contact over the die radius by an amount proportional to $\alpha/90°$ (where α is the angle to declination of the hold-down surface to the horizontal, as shown in Fig. 11b).

If the punch nose radius can be increased from one to five times metal thickness, the load in the sidewall of the shell will decrease so that the reduction in blank diameter will increase from 35% to approximately 50% (for steel). The shell can therefore be drawn deeper before the sidewall tears. If the shell bottom radius is less than four times the sheet thickness, it is usually desirable to form it with a larger-radius punch and then to restrike to develop the specified radius. This will minimize bottom failures. However, the bottom corner radius usually cannot be increased beyond ten times the sheet thickness without the likelihood of wrinkling. The metal in dome-shaped parts is likely to pucker in the unconfined area between the punch nose and die radius. High blankholding forces or draw beads are often used to induce combined stretching and drawing of the metal when forming dome shapes.

The deep drawing of stainless steel or high-strength alloy boxes with sides longer than 50 times stock thickness may result in a stability problem called oil canning. The deflection of the sides by snap action can be eliminated by drawing the part in two operations with slightly different punches and an intermediate anneal. The first-draw punch will have a larger nose radius than the second; therefore, in the second drawing operation, the metal can be stretched to eliminate the oil-canning effect. Stretching of the metal in parts with long sidewalls can be improved by gradually increasing the punch nose radius from the corner toward the center. A constant nose radius is used on the second-draw punch.

Effect of Punch-to-Die Clearance

The selection of punch-to-die clearance depends on the requirements of the drawn part and on the work metal. Because there is a decrease and then a gradual increase in the thickness of the metal as it is drawn over the die radius, clearance per side of 7 to 15% greater than stock thickness (1.07 to 1.15*t*) helps prevent burnishing of the sidewall and punching out of the cup bottom.

The drawing force is minimal when the clearance per side is 15 to 20% greater than stock thickness (1.15 to 1.20*t*) and the cupped portions of the part are not in contact with the walls of the punch and die. The force increases as the clearance decreases, and a secondary peak occurs on the force-stroke curve where the metal thickness is slightly greater than the clearance and where ironing starts.

Redrawing operations require greater clearance, in relation to blank thickness, than the first draw in order to compensate for the increase in metal thickness during cupping. A sizing redraw is used where the diameter or wall thickness is important or where it is necessary to improve surface finish to reduce finishing costs. The clearance used is less than that for the first draw.

Table 1 lists clearances for cupping, redrawing, and sizing draws of cylindrical parts from metal of various thicknesses. As the tensile strength of the stock decreases, the clearance must be increased.

Clearance between the punch and die for a rectangular shell, at the sidewalls and ends, is approximately the same as, or slightly less than, that for a circular shell. Clearance at the corners may be as much as 50% greater than stock thickness to avoid ironing in these areas and to increase drawability.

Restraint of Metal Flow

Even in the simplest drawing operation, as shown in Fig. 6(a), the thickness of the work metal and the die radius offer some restraint to the flow of metal into the die. For drawing all but the simplest of shapes, some added restraint is generally required in order to control the flow of metal. This additional restraint is usually obtained by the use of a blankholder, as illustrated in Fig. 6(b) and (c). The purpose of the blankholder is to suppress wrinkling and puckering and to control the flow of the work metal into the die.

Drawing without a Blankholder. A blank is not susceptible to wrinkling, and a blankholder need not be used, if the ratio of supported length to sheet thickness is within certain limits. In Fig. 12, the supported length (l) is the length from the edge of the blank to the die cavity (point of tangency). The sheet thickness is denoted as t. The l/t ratio is influenced little by other geometrical conditions, and it differs little for the various metals commonly drawn. When the l/t ratio does not exceed 3 to 1, a cup can be drawn from annealed brass, aluminum (to half-hard), and low-carbon steel without a blankholder. For slightly harder work metals, such as hard copper or half-hard brass, this ratio should not exceed 2.5 to 1.

An elliptical or conical die opening, such as that shown in Fig. 11(a), can be used where the die radius required to draw the part reduces the length of the blank-supporting surface to less than three times stock thickness. The distance between the die opening and the punch should not exceed ten times stock thickness.

A 30° elliptical radius derived from a circle created by a given draw radius increases the strain on the metal being drawn by 4.2%, but it decreases the metal out of control by 47% of the length of the original draw radius. This shape has been helpful in the drawing of tapered shells from a flat blank. For these draws, it is desirable to increase the strain slightly to prevent puckers and to reduce the metal out of control for the same reason.

A 45° elliptical radius derived as stated previously reduces the strain on the metal being drawn by 1.03% and reduces the metal out of control by 33% of the length of the original draw radius. The 45° ellipse is useful only when a large radius will draw the part, but produces wrinkles. A smaller radius will not permit the draw.

A 60° elliptical radius does not measurably reduce drawing strain and accounts for only a 9% reduction of metal out of control. Its use on draw dies is not economically feasible when the small gains derived are considered in relation to the cost of producing the contour. The drawing of thick metal without a blankholder is frequently done when the blank diameter is no greater than 20 times stock thickness.

Blankholders. A blankholder, or binder, is used to control metal flow into the die cavity and to prevent wrinkles from forming in the flange of a deep-drawn part. The formation of wrinkles interferes with, or prevents, the compressive action that rearranges the metal from flange to sidewall. Much greater reductions are possible when a blankholder is used.

Blankholders can be used in double- and single-action presses. In a double-action press, the blankholder advances slightly ahead of the punch and dwells at the bottom of its stroke throughout the drawing phase of the punch cycle. The blankholder dwell usually extends to a point on the punch upstroke at which positive stripping of the shell is ensured. By using a die cushion and an inverted die, similar action can be obtained in a single-action press. A die cushion in a double-action press supports the blank and holds it

Table 1 Punch-to-die clearance for drawing operations

Metal thickness, *t*		Clearance-to-metal-thickness relationship for:		
mm	in.	Cupping	Redrawing	Sizing draws
Up to 0.38	Up to 0.015	1.07–1.09*t*	1.08–1.10*t*	1.04–1.05*t*
0.41–1.27	0.016–0.050	1.08–1.10*t*	1.09–1.12*t*	1.05–1.06*t*
1.29–3.18	0.051–0.125	1.10–1.12*t*	1.12–1.14*t*	1.07–1.09*t*
3.2 and up	0.126 and up	1.12–1.14*t*	1.15–1.20*t*	1.08–1.10*t*

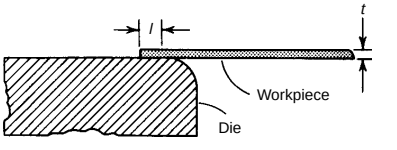

Fig. 12 The ratio of supported length l to sheet thickness t determines whether or not a blankholder is required for deep drawing.

Downloaded from http://dl.asminternational.org/handbooks/book/chapter-pdf/246068/a0005121.pdf
by Michael Jobin
on 18 December 2020

against the punch during the drawing operation; it then lifts the finished part out of the die.

A blankholder must allow the work metal to thicken as the edge of the blank moves inward toward the working edge of the die. The amount of thickening is expressed by:

$$\frac{t_1}{t} = \sqrt{\frac{D}{D_1}} \qquad \text{(Eq 8)}$$

where t is the blank thickness, t_1 is the thickness of the flange at any instant during the drawing operation, D is the blank diameter, and D_1 is the diameter of the flange at any instant during the drawing operation (or the mean diameter of the workpiece without the flange). As the metal flows, paths of least resistance are taken; therefore, the actual value of t_1 will be less than that calculated from the formula.

Types of Blankholders. Blankholders can be flat, or they may have a combination of fixed drawbeads and constant blankholder displacements. In flat binders, restraining forces in the drawn sheet are provided by friction between the binder plates and the sheet metal. In fixed drawbead binders, restraining forces result from a combination of plastic deformation and friction. The simplest type of blankholder is fixed to the die block and has a flat hold-down surface, as shown in Fig. 13(a). A disadvantage of this type of blankholder is that maintenance of the optimal gap between the die surface and the flat hold-down surface requires careful adjustment. As shown in Fig. 13, the blankholder does not quite contact the work metal as drawing begins; restraint begins and increases as the flange portion thickens. A gap that is either too small or too large increases force and reduces drawability. For optimal results, the gap should be slightly smaller than the flange thickness, allowing 50 to 75% of the final thickening before the work metal contacts the blankholder.

The flat controlled-pressure blankholder shown in Fig. 13(b) is generally preferred in production operations because it can be adjusted to a predetermined and closely controlled value by hydraulic or pneumatic pressure. Springs, unless extremely long, are not suitable for supplying pressure to a blankholder during deep drawing, because the force exerted by a spring increases rapidly as it is compressed. The force on hydraulic or pneumatic die cushions will increase approximately 20% when compressed the full stroke length. Some hydraulic systems have pressure control valves that supply a more nearly constant pressure during the entire stroke.

The fixed-type blankholder (Fig. 13a) draws a cup without a flange and ejects it through the bottom of the die. The blankholder shown in Fig. 6(b) and (c) and in Fig. 13(b) can be used for drawing a cup with or without a flange. Cups without a flange can be pushed through the die if a pressure pad is not needed to support the blank.

Flexible Blankholder. Conventional stamping with rigid binders does not allow local control of sheet metal flow into the die cavity, as shown in Fig. 14. This produces a forming system with limited application and leads to an elaborate and costly die tryout process to produce a product. New tooling concepts and an advanced binder control system were developed and implemented in Germany. The new development produces flexible binders with individually controlled hydraulic cylinders, as shown in Fig. 15. Individual control of local binder areas allows the right amount of metal to flow into the die cavity. Unlike rigid binders, a flexible binder produces the right amount of elastic deformation in the binder area, and this produces the necessary friction condition for metal flow. The cone-shaped segments localize the applied pressure in a specific area without influencing the pressure in adjacent areas. Trials on an automotive front fender were conducted using a ten-point cushion system in a hydraulic press. Results from the trials showed that flexible binder technology improves the quality of fenders by allowing the manipulation of pressure settings in binder areas that control metal flow to the defect location. The effect of binder load control on wrinkling behavior at the nose of the fender is shown in Fig. 16 and 17. Figure 16 shows wrinkles obtained when nonoptimized pin forces

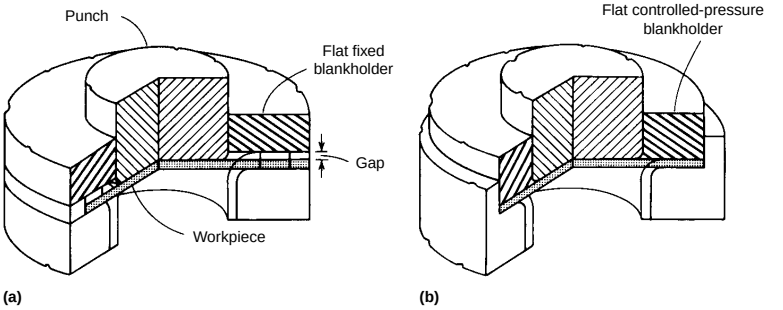

Fig. 13 Setups showing the use of two types of blankholders. See text for details.

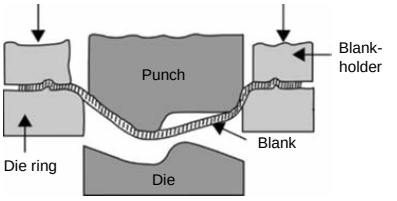

Fig. 14 Schematic of a rigid sheet metal forming system

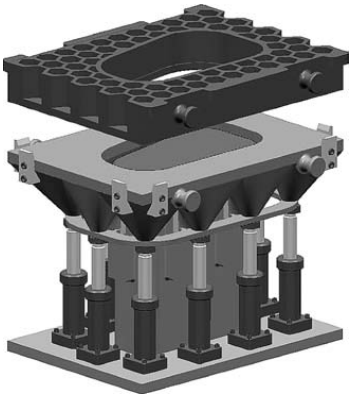

Fig. 15 Flexible binder with individually controlled hydraulic cylinders

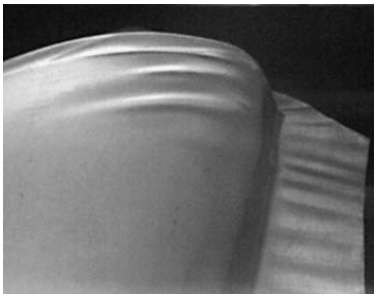

Fig. 16 Wrinkles obtained using nonoptimized pin forces

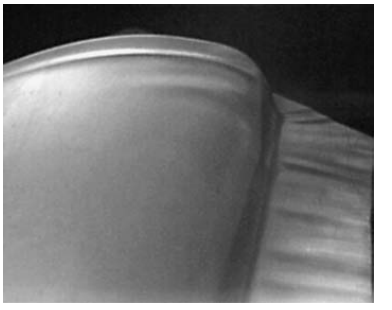

Fig. 17 Reduction in wrinkles after optimizing pin forces

Downloaded from http://dl.asminternational.org/handbooks/book/chapter-pdf/246068/a0005121.pdf
by Michael Jobin
on 18 December 2020

were used. Figure 17 shows that less wrinkles were obtained when the pin forces in the binder area are optimized. Flexible binder control technology is currently being used to successfully deep draw stainless steel double sinks.

Blankholder Force. Compressive forces on the metal in the area beyond the edge of the die cause the work metal to buckle. If this buckled or wrinkled metal is pulled into the die during the drawing operation, it will increase the strain in the area of the punch nose to the point at which the work metal would fracture soon after the beginning of the draw. Blankholder force is used to prevent this buckling and subsequent failure. The amount of blankholder force required is usually approximately one-third that required for drawing. Thickness of the work metal must also be considered when simple shapes are being drawn; the thinner the work metal, the more blankholder force that is required.

There are no absolute rules for calculating blankholder force for a given drawing operation; most blankholder force values are found empirically. Blankholder force should be just sufficient to prevent wrinkling, and it depends on draw reduction, work metal thickness and properties, the type of lubrication used, and other factors. For a particular application, blankholder force is best determined experimentally.

Draw beads help prevent wrinkles and control the flow of metal in the drawing process. The use of draw beads increases the cost of tools, product development, and tool maintenance. However, they are often the only means of controlling metal flow in the drawing of odd shapes. Draw beads are ordinarily used for the first draw only; therefore, production rates are the same as when conventional blankholders are used. For low production, draw beads are often made by laying a weld bead on the die after the optimal location has been determined.

Restraint of the metal flow, to the extreme of locking the flange of the blank to prevent motion, is needed for some draws. A deep shell with sloping walls can be made by drawing, followed by several redraws. This results in a stepped workpiece. The final sizing draw is a stretching operation that is done with the flange secured by a locking bead in the blankholder. This kind of blankholder is also used in making shallow drawn panels. Additional information on the design and use of draw beads is available in the article "Forming of Carbon Steels" in this Volume.

Effect of Press Speed

Drawing speed is usually expressed in meters per minute (m/min) or linear feet per minute (ft/min). Under ideal conditions, press speeds as high as 23 m/min (75 ft/min) are used for the deep drawing of low-carbon steel. However, 6 to 17 m/min (20 to 55 ft/min) is the usual range—up to 17 m/min (55 ft/min) for single-action presses and 11 to 15 m/min (35 to 50 ft/min) for double-action presses. Ideal conditions include:

- Use of a drawing-quality work metal
- Symmetrical workpieces of relatively mild severity
- Adequate lubrication
- Precision carbide tools
- Carefully controlled blankholding pressure
- Presses that are maintained to a high level of accuracy

When one or more of the aforementioned conditions is less than ideal, some reduction in press speed is required. If all, or nearly all, are substantially less than ideal, press speed may have to be reduced to 6 m/min (20 ft/min). When the operation includes ironing, the drawing speed is usually reduced to approximately 7.5 m/min (25 ft/min) regardless of other factors.

The punch speed in hydraulic presses is relatively constant throughout the stroke. In mechanical presses, punch speed is that at midstroke, because the velocity changes in a characteristic manner throughout the drawing stroke from maximum velocity to zero. The only adjustment in speed that can be made is to decrease flywheel speed or to use a press with a shorter stroke that operates at the same number of strokes per minute. This proportionately decreases maximum punch speed. Speed is of greater significance in drawing stainless steels and heat-resistant alloys than in drawing softer, more ductile metals. Excessive press speeds have caused cracking and excessive wall thinning in drawing these stronger, less ductile metals. At high speeds, the metal thins because it cannot react to the impact speed of the punch. Reducing the speed reduces the stretching and gives the metal enough time to flow plastically. Nominal speeds for drawing various metals are given in Table 2.

Effect of Lubrication

When two metals are in sliding contact under pressure, as with the dies and the work metal in drawing, galling (pressure welding) of the tools and the work metal is likely. When extreme galling occurs, drawing force increases and becomes unevenly distributed, causing fracture of the workpiece.

The likelihood of pressure welding depends on the amount of force and the work metal composition. Some work metals are more "sticky" than others. For example, austenitic stainless steel is more likely to adhere to steel tools than low-carbon steel is.

Lubricants are used in most drawing operations. They range from ordinary machine oil to pigmented compounds.

Selection of lubricant is primarily based on the ability to prevent galling, wrinkling, or tearing during deep drawing. It is also influenced by ease of application and removal, corrosivity, and other factors, as described in the article "Selection and Use of Lubricants in Forming of Sheet Metal" in this Volume.

If a lubricant cannot be applied uniformly by ordinary shop methods, its purpose is defeated, regardless of its ability to prevent pressure welding. In general, as the effectiveness of a lubricant increases, the difficulty of removing it also increases. For example, grease or oil can be easily removed, but special procedures (frequently including some hand scrubbing) are required for removing lubricants that contain zinc oxide, lithopone, white lead, molybdenum disulfide, or graphite.

A lubricant is sometimes too corrosive for use on certain metals. For example, copper alloys are susceptible to staining by lubricants that contain large amounts of sulfur or chlorine compounds. Lubricants containing lead or zinc compounds are not recommended for drawing stainless steel or heat-resistant alloys, because the compounds, if not thoroughly removed, can cause intergranular attack when the workpieces are heat treated or placed in high-temperature service. Suitable safety precautions are necessary with toxic or flammable lubricants.

Some metals, such as magnesium and titanium, are drawn at elevated temperature, which complicates selection of the lubricant. Most oil-base and soap-base lubricants can be successfully used to 120 °C (250 °F), but above this temperature, the choice narrows rapidly. Some special soap-base lubricants can be used on work metals to 230 °C (450 °F). Molybdenum disulfide and graphite can be used at higher temperatures.

Any lubricant must remain stable, without becoming rancid, when stored for a period of several months at various temperatures. The cost of application and removal of the lubricant, as well as its initial cost, must be considered because all of these items can add substantially to the cost of the drawn workpieces.

In some plants, when a new application is started, a heavily pigmented drawing lubricant is used, regardless of the difficulty of applying and removing it. Lubricant is then downgraded as much as possible to simplify the operation and to reduce costs. In other plants, the reverse of this practice is used; that is, a simple lubricant, such as machine oil, is used at first, and lubricant is then upgraded when necessary.

The difficulty of removing drawing lubricants is an important consideration in production operations. In a number of applications, changes in drawing techniques (such as increasing the

Table 2 Typical drawing speeds for various materials

Material	Drawing speed	
	m/min	ft/min
Aluminum	45.7–53.3	150–175
Brass	53.3–61	175–200
Copper	38.1–45.7	125–150
Steel	5.5–15.2	18–50
Stainless steel	9.1–12.2	30–40
Zinc	38.1–45.7	125–150

Downloaded from http://dl.asminternational.org/handbooks/book/chapter-pdf/246068/a0005121.pdf
by Michael Jobin
on 18 December 2020

IPR2023-00485
Nespresso USA, Inc. Ex. 1026
Page 9 of 18

number of draws) or in workpiece design (larger radii, for example) have been made solely to permit the use of an easier-to-remove drawing lubricant. Methods of removing lubricants are discussed in the section "Cleaning of Workpieces" in this article.

Typical lubricants used in drawing steel are given in Table 3 according to severity of draw or the percentage of reduction from blank to cup diameter. Zinc phosphate conversion coating of the steel to be drawn is helpful for any drawing operation, and the importance of phosphate coating increases as the severity of the draw increases. Methods of application and other details on the use of phosphate conversion coatings are discussed in the article "Phosphate Coatings" in *Surface Engineering,* Volume 5, *ASM Handbook,* 1994.

Materials for Deep Drawing

Sheet steels and other sheet metals with higher strengths and better formability have recently become available. Developments such as vacuum processing and inclusion shape control have been especially beneficial in increasing the drawability of steels. Other metals and alloys that can be deep drawn include aluminum and aluminum alloys, copper and alloys, some stainless steels, and titanium.

Low-carbon sheet steels are the materials that are most commonly deep drawn and are commonly used, for example, in the automotive industry. Materials such as 1006 and 1008 steel have typical yield strengths in the range of 170 to 240 MPa (25 to 35 ksi) and elongations of 35 to 45% in 50 mm (2 in.). These materials have excellent formability and are available cold or hot finished in various quality levels and a wide range of thicknesses. Table 4 lists mechanical properties of the various qualities of carbon steel sheet.

Other low-carbon steels that are commonly deep drawn are grades 1010 and 1012. These materials are slightly stronger than 1006 and 1008 and are slightly less formable. They are often specified when drawing is not severe and strength of the finished part is of some concern. Grain size affects the drawability of these materials, and it may affect the selection of a grade. Grain sizes of ASTM 5 or coarser may result in excessive surface roughness as well as reduced drawability.

Surface finish also influences drawability. The dull finish normally supplied on drawing steels is designed to hold lubricants and to improve drawability. Brighter finishes may be required if, for example, parts are to be electroplated.

Effects of Material Variables on Deep Drawing

Anisotropy. As mentioned earlier in this article, there are two types of anisotropy that must be considered: planar anisotropy, in which properties vary in the plane of the sheet, and normal anisotropy, in which the properties of the material in the thickness direction differ from those in the plane of the sheet.

Planar anisotropy (variations in normal anisotropy in the plane of the sheet) causes undesirable earing of the work material during drawing.

Table 3 Lubricants commonly used for the drawing of low-carbon steel

Severity is indicated by the percentage of reduction in diameter in drawing a cylindrical shell.

Type or composition of lubricant	Ease of removal by: Water-base cleaners	Ease of removal by: Degreasers or solvents	Protection against rusting
Water-base lubricants			
Low severity (10% or less)			
Water emulsion of 5–20% general-purpose soluble oil or wax	Very good	Good	Fair
Moderate severity (11–20%)			
Water solution of 5–20% soap	Very good	Very poor	Fair
Water emulsion of heavy-duty soluble oil (contains sulfurized or chlorinated additives)	Very good	Good	Fair
High severity (21–40%)			
Soap-fat paste, diluted with water (may contain wax)	Fair	Poor	Fair
Water emulsion of heavy-duty soluble oil (contains a high concentration of sulfurized or chlorinated additives)	Very good	Good	Fair to poor
Maximum severity (>40%)			
Pigmented soap-fat paste, diluted with water	Poor	Very poor	Good
Dry soap or wax (applied from water solution or dispersion); may contain soluble filler such as borax	Good	Very poor	Good
Oil-base lubricants			
Low severity (10% or less)			
Mill oil, residual	Good	Very good	Fair
Mineral oil	Good	Very good	Fair
Vanishing oil	Removal not required		. . .
Moderate severity (11–20%)			
Mineral oil plus 10–30% fatty oil	Good	Very good	Fair
Mineral oil plus 2–20% sulfurized or chlorinated oil (extreme-pressure oil)	Good to fair	Good	Fair to poor
High severity (21–40%)			
Fatty oil	Fair	Fair	Fair
Mineral oil plus 5–50% of:			
(a) Nonemulsifiable chlorinated oil	Poor	Good	Very poor
(b) Emulsifiable chlorinated oil	Good	Good	Very poor
Concentrated phosphated oil	Fair	Fair	Fair
Maximum severity (>40%)			
Blend of pigmented soap-fat paste with mineral oil	Poor	Poor	Fair
Concentrated sulfochlorinated oil (may contain some fatty oil):			
(a) Nonemulsifiable	Very poor	Fair	Poor
(b) Emulsifiable	Good	Fair	Poor
Concentrated chlorinated oil:			
(a) Nonemulsifiable	Very poor	Fair	Very poor
(b) Emulsifiable	Good	Fair	Very poor

Table 4 Typical mechanical properties of low-carbon sheet steels

Quality level	Tensile strength, MPa	Tensile strength, ksi	Yield strength, MPa	Yield strength, ksi	Elongation, % in 50 mm (2 in.)	Plastic-strain ratio, *r*	Strain-hardening exponent, *n*	Hardness, HRB
Hot rolled								
Commercial quality	358	52	234	34	35	1.0	0.18	58
Drawing quality	345	50	220	32	39	1.0	0.19	52
Drawing quality, aluminum killed	358	52	234	34	38	1.0	0.19	54
Cold rolled, box annealed								
Commercial quality	331	48	234	34	36	1.2	0.20	50
Drawing quality	317	46	207	30	40	1.2	0.21	42
Drawing quality, aluminum killed	303	44	193	28	42	1.5	0.22	42
Interstitial-free	310	45	179	26	45	2.0	0.23	44

Downloaded from http://dl.asminternational.org/handbooks/book/chapter-pdf/246068/a0005121.pdf
by Michael Jobin
on 18 December 2020

Between the ears of the cup are valleys in which the material has thickened under compressive hoop stress rather than elongating under radial tensile stress. This thicker metal sometimes forces the die open against the blankholder pressure, allowing the metal in the relatively thin areas near the ears to wrinkle. Die design, draw reduction, and type of lubricant used all affect earing (see the section "Effects of Process Variables in Deep Drawing" in this article).

Sheet Thickness. In deep drawing, the pressure on the dies increases proportionally to the square of sheet thickness. The pressure involved is concentrated on the draw radius, and increasing sheet thickness will localize wear in this area without similar effect on other surfaces of the die. Thick stock has fewer tendencies to wrinkle than thin stock. As a result, blankholder pressures used for the drawing of thick sheet may be no greater, and may even be less, than those used for thinner blanks.

Redrawing Operations

If the shape change required by the part design is too severe (the drawing ratio is too high), a single drawing operation may not produce complete forming of the part, and more than one drawing step may be required.

Direct Redrawing. In direct redrawing in a single-action die, the drawn cup is slipped over the punch and is loaded in the die, as shown in Fig. 18. At first, the bottom of the cup is wrapped around the punch nose without reducing the diameter of the cylindrical section. The sidewall section then enters the die and is gradually reduced to its final diameter. Metal flow takes place as the cup is drawn into the die so that the wall of the redrawn shell is parallel to, and deeper than, the wall of the cup at the start of the redraw. At the beginning of redrawing, the cup must be supported and guided by a recess in the die or by a blankholder to prevent it from tipping, because tipping would result in an uneven shell.

In a single-action redraw, the metal must be thick enough to withstand the compressive forces set up in reducing the cup diameter without wrinkling. Wrinkling can be prevented by the use of an internal blankholder and a double-action press (upper right, Fig. 18), which usually permits a shell to be formed in fewer operations than by single-action drawing without the use of a blankholder.

Internal blankholders (Fig. 19) are slip fitted into drawn shells to provide support and to prevent wrinkling during direct redrawing. The blankholder presses on the drawn shell at the working edge of the die before the punch contacts the bottom of the shell and begins the redraw. It dwells against the shell as the metal is drawn into the die by the punch, preventing wrinkles.

The bottom of the cup to be redrawn can be tapered (Fig. 19a) or radiused (Fig. 19b), with the tip of the blankholder and the mouth of the die designed accordingly. An angle of 30° is used for metal thinner than 0.8 mm (1/32 in.), and 45° is used for thicker work metal. A modification of the aforementioned is a blankholder fitted against an S-curve die (Fig. 19b). The main disadvantage of an S-curve die is that it is more expensive to make and maintain. Near the bottom of a redrawn shell, there is usually a narrow ring, caused by the bottom radius of the preceding shell, which is thinner and harder than the adjacent metal. Redrawing may be required for reasons other than the severity of the drawn shape, for example, to prevent thinning and bulging.

Redrawing can also be done in a progressive die while the part is still attached to the strip. Where space permits the extra stations, the amount of work done in each station will be less than that done in a single die. This reduces the severity of the draw and promotes high-speed operation.

Reverse Redrawing. In reverse redrawing, the cupped workpiece is placed over a reversing ring and redrawn in the direction opposite to that used for drawing the initial cup. As shown in the two lower views in Fig. 18, reverse redrawing can be done with or without a blankholder. The blankholder serves the same purposes as in direct redrawing.

The advantages of reverse redrawing as compared with direct redrawing include:

- Drawing and redrawing can be accomplished in one stroke of a triple-action hydraulic press, or of a double-action mechanical press with a die cushion, which can eliminate the need for a second press.
- Greater reductions per redraw are possible with reverse redrawing.
- One or more intermediate annealing operations can often be eliminated by using the reverse technique.
- Better distribution of metal can be obtained in a complex shape.

In borderline applications, annealing is required between redraws in direct redrawing but is not needed in reverse redrawing.

The disadvantages of reverse redrawing are:

- The technique is not practical for work metal thicker than 6.4 mm (1/4 in.).
- Reverse redrawing requires a longer stroke than direct redrawing.

Usually, metals that can be direct redrawn can be reverse redrawn. All of the carbon and low-alloy steels, austenitic and ferritic stainless steels, aluminum alloys, and copper alloys can be reverse redrawn.

Reverse redrawing requires more closely controlled processing than direct redrawing does. This control must begin with the blanks, which should be free from nicks and scratches, especially at the edges.

The restraint in reverse redrawing must be uniform and low. For low friction, polished dies and effective lubrication of the work are needed. Friction is also affected by hold-down pressure and by the shape of the reversing ring. Radii of tools should be as large as practical, ten times the thickness of the work metal if possible. Reverse redrawing can be done in a progressive die as well as in single-stage dies if the operations are divided to distribute the work and to reduce the severity of each stage.

Tooling for Redrawing. Tooling for redrawing depends mainly on the number of parts to be redrawn and on available equipment. In continuous high production, a complete die is used for each redraw; the workpieces are conveyed from press to press until completed. In low or medium production, it is common practice to use a die with replaceable draw rings and punches. A die of this type used for three redrawing operations is shown in Fig. 20; the three redraws were made by changing to successively smaller draw rings and punches. The cup was drawn in a compound blank-and-draw die from a blank 1.7 mm (0.067 in.) thick and 170 mm (6 3/4 in.) in diameter.

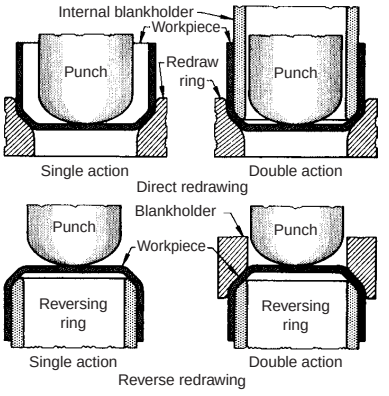

Fig. 18 Direct and reverse redrawing in single-action and double-action dies

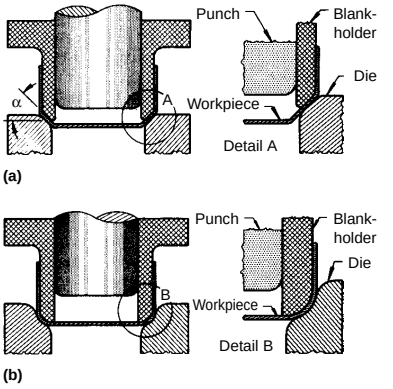

Fig. 19 Setups using internal blankholders for restraint of work metal in redrawing shells. See text for details.

Downloaded from http://dl.asminternational.org/handbooks/book/chapter-pdf/246068/a0005121.pdf
by Michael Jobin
on 18 December 2020

Ironing

Ironing is an operation used to increase the length of a tube or cup by reducing wall thickness and outside diameter, while the inner diameter remains unchanged. Wall thickness is reduced by pulling tubes or shells through tight dies. The process of ironing is similar to tube drawing with a moving mandrel, whereby drawing is carried out by using several drawing dies located in tandem. In a typical application, a relatively thick-wall cup is first produced by extrusion or deep drawing. The wall thickness of this cup is then reduced by tandem ironing with a cylindrical punch, while the internal diameter remains unchanged. Hot and cold ironing produce parts with good dimensional accuracy while maintaining or improving concentricity. A very common application of ironing is the production of beverage cans by tandem drawing of steel or aluminum.

Ironing is done to:

- Obtain a wall that is thin compared with the shell bottom
- Obtain a uniform wall
- Obtain a tapered wall (as in cartridge cases), or merely to correct the natural wall thickening that occurs toward the top edge of a drawn shell

The theoretical maximum reduction in wall thickness per operation due to ironing is approximately 50%. In such a case, the cross-sectional area of the (unstrained) metal before ironing is approximately twice the cross-sectional area after ironing. Therefore, the area that is being worked in compression and that must yield is approximately equal to the strain-hardened area that is in tension and that must not yield. This would indicate that the practical limit should apparently be kept below 50%, although slightly higher reductions may be possible.

The chart in Fig. 21 (Ref 1) is arranged to show approximately the natural change in thickness accompanying a change in diameter. The results apply to the upper edges of drawn shells, because the wall thickness tapers from a maximum at that point to a minimum at the bottom corner, where it may be as much as 10 or 15% less than the original metal thickness. Even at the top edge, the metal thickness is likely to be a little less than the theoretical thickness given by the chart because of the thinning effect of bending over the drawing edge. A sharper radius or a deeper draw increases this thinning effect.

An example is indicated by dashed lines in Fig. 21. It is noted that this is based on a draw with sufficient clearance between the punch and die so that there will be no ironing. If the clearance between punch and die is made equal to the metal thickness (0.0625 in., or 1.6 mm, in the example), there will be an ironing load (added to the drawing load) that is sufficient to reduce the wall thickness by 0.45 mm (0.018 in., or 0.0805 in. −0.0625 in. = 0.018 in.). If a parallel wall is desired, it will be necessary to iron

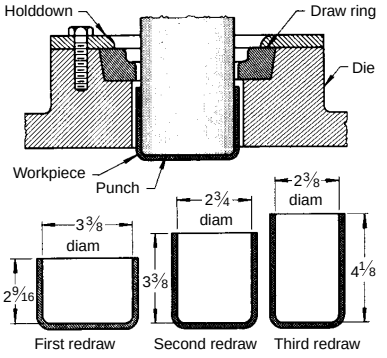

Fig. 20 Die in which draw rings and punches can be replaced for producing three successive redraws. Dimensions given in inches

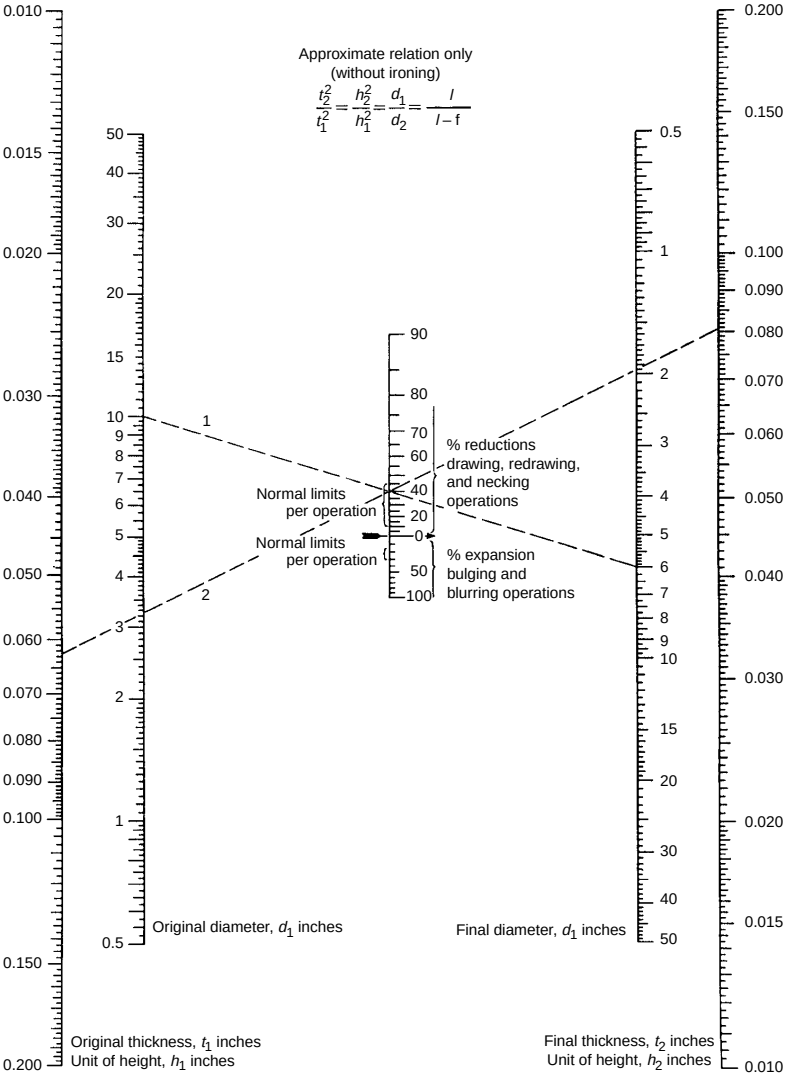

Fig. 21 Chart for determining approximate changes in thickness from changes in outer diameter due to ironing. Read the chart from left to right. (1) Draw a line between the original shell or blank diameter and the final diameter (on the two inner scales) to obtain the maximum percent reduction or expansion on the center scale. (2) Draw a second line through this point, starting from the original metal thickness on the left-hand scale, to indicate the approximate maximum wall thickness at the upper edge of the final shell. Source: Ref 1

Downloaded from http://dl.asminternational.org/handbooks/book/chapter-pdf/246068/a0005121.pdf
by Michael Jobin
on 18 December 2020

down to the thickness of the thinnest part of the wall, which is appreciably less than the original metal thickness, depending on the sharpness of comer radii and the severity of reductions.

The chart in Fig. 22 offers a convenient means of approximating the pressure required in ironing. Referring to the example shown in dashed lines, note that the two inner scales are used first to establish the pivot point on the center scale. Thus, a shell ironed to a finished diameter of 100 mm (4 in.), with a displacement of 0.25 mm (0.010 in.) of the total metal thickness, will require an ironing pressure of approximately 3.8 tons, assuming that the metal is spheroidized steel moderately strain hardened and therefore offering a compressive resistance of approximately 620 MPa (90 ksi). This must be added, of course, to the drawing or redrawing load figured separately. The formula is $P = 1.2\ \pi d \cdot i \cdot S$, where P is the approximate required maximum pressure (in tons), d is the outside diameter (in inches) after ironing, i is the reduction in wall thickness (in inches), and S is the compressive resistance (in psi) of the metal under existing conditions of strain hardening. There is included a 20% allowance for surface friction in addition to the work of coining. This is an arbitrary figure that should cover well-polished dies and suitable lubrication. Lack of lubricant, toolmark rings on the dies, or surface pickup will increase the friction load considerably.

If the wall of a shell is ironed thinner by the same amount for the entire length of the shell, then the work done is approximately the product of the length of the shell or of the ironed surface and the pressure required for ironing (from the chart). This is expressed as $W = P \cdot l$, where W is work in inch-tons, P is pressure in tons, and l is length in inches. If a reducing operation accompanies ironing, then the drawing pressure should be added to the ironing pressure. If the ironing operation is done merely to correct the natural changes in wall thickness due to drawing and reduces the thickest portion near the top of the shell to equal the thinnest portion near the bottom, the average ironing pressure will equal approximately half the maximum, and the formula will be $W = 0.5\ P \cdot l$.

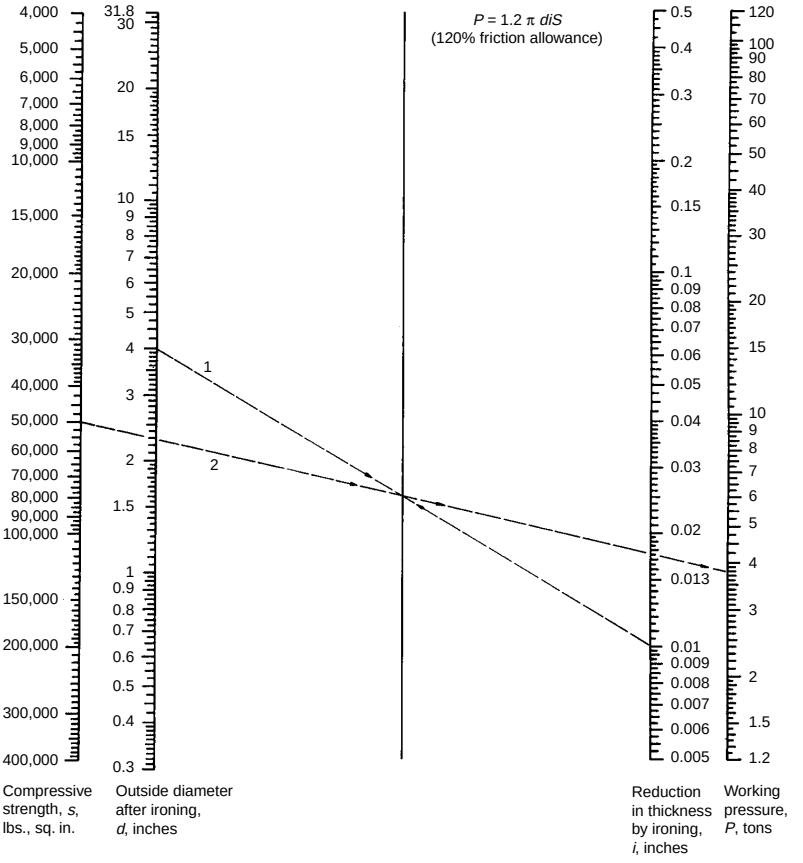

Fig. 22 Chart for determining pressures required for ironing. Source: Ref 1

Drawing of Boxlike Shells

Square or rectangular shells can be formed by redrawing circular shells when there is no flange. When flanges are required, the difficulty of producing acceptable boxlike shapes by drawing is increased. For deep-drawn square or rectangular shells (for example, where the depth is greater than either length or width), the best approach for forming a narrow flange is to allow sufficient stock and to form the flange after redrawing from a cylindrical shell.

Shallower boxlike shapes (for example, with proportions similar to the box illustrated in Fig. 23) can be drawn with a flange, which is then trimmed to the desired width. Calculations for the area of a blank used for a circular workpiece cannot be used for a square or rectangular box. These require metal in the bottom, ends, sides, and flange, as shown when a box is unfolded (flat pattern, Fig. 23). The excess metal at the corners (shaded areas, Fig. 23) is a problem.

A seamless square or rectangular shell is made by drawing metal into the corners. The metal not needed for the corners is pushed into the walls adjacent to the corner radius and into earlike extensions of the corners. The compressive stresses set up when the metal in the corners is rearranged cause the metal to be thicker in the corners than in the sidewall or in the original blank.

The more difficult draws are made more easily by using a carefully developed blank. There are methods of developing the shape at the corners of a blank for a square or rectangular shell so that there is a minimum of excess metal. However, by cropping the corners as shown in Fig. 23 and by using a blankholder, satisfactory parts can generally be made. Draw beads in the blankholding surface surrounding the die are frequently used.

Drawing of Workpieces with Flanges

Regardless of whether the drawn workpiece is circular, rectangular, or asymmetrical, producing acceptable small-width flanges on workpieces is seldom a problem. Flanged workpieces are usually drawn in two or more operations, frequently with restriking as a final operation.

Cylindrical workpieces with wide flanges are troublesome to draw because of excessive wrinkling or fracturing in the sidewall due to lack of metal flow. Even though the metal is restrained by a blankholder, it is difficult to

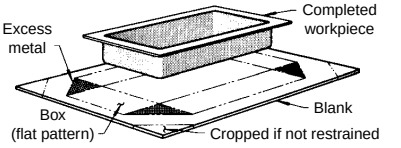

Fig. 23 Flanged rectangular box drawn from a blank with restraint at the corners. See text for details.

Downloaded from http://dl.asminternational.org/handbooks/book/chapter-pdf/246068/a0005121.pdf
by Michael Jobin
on 18 December 2020

obtain acceptable flatness without special procedures. Wide flanges on relatively large workpieces can be made flat by coining after drawing. Another means of dealing with wrinkling, when design permits, is to provide ribs in the flange. This controls the wrinkling by allowing space for the excess metal. Ribs are usually spaced radially around the flange, although circular, concentric ribs also are effective.

Rectangular, boxlike workpieces that have flanges are difficult to redraw in such a manner that the flange is unaffected in redrawing operations. Therefore, it is common practice to draw the part first to a shallower depth and with larger bottom radii than needed for shaping the final contour. The part is then reformed in a final operation.

Asymmetrical workpieces that have flanges are often difficult to draw, particularly when neither draw beads in the die nor ribs in the workpiece can be permitted. Under these conditions, considerable development is usually required to determine the blankholder pressure that will result in the desired metal flow without using a larger blank than necessary.

Drawing of Hemispheres

In the drawing of a hemisphere, metal flow must be closely controlled for balance between excessive thinning in one area and wrinkling in another. In the top illustration in Fig. 24, the punch has begun to stretch the round blank, which is restrained by the blankholder, and the crown section of the hemisphere is being formed. At this stage, the crown section is subjected to biaxial tension, which results in metal thinning. With correct pressure on the blankholder, thinning is in the range of 10 to 15%. More than 15% thinning is likely to result in fracture of the crown section. In the top illustration in Fig. 24, the portion of the blank under the blankholder has not begun to move.

As the drawing operation continues, the metal begins to move from the blankholder, and a different problem develops (center illustration, Fig. 24). Here, the metal has been drawn into a partial hemisphere with unsupported metal in a tangential slope between the punch and the clamped surface. Unlike the drawing of straight-sided shapes, the wide gap (wrinkling area, Fig. 24) prevents the use of the draw ring bore as the means of forcing the metal against the punch surface; therefore, the probability of wrinkling increases. Because the metal cannot be confined between the punch and die, wrinkling is likely to occur in this area.

To prevent wrinkles, the metal must flow from the flange area and, at the same time, must be securely held in tension. This requires an additional stretching force, derived from the portion of the blank that remains clamped. The area of metal between the clamping surfaces is gradually reduced as the punch advances, but the draw radius offers some resistance because the metal must follow a sharper bend as it moves into the die.

One means of controlling wrinkling is by the use of draw beads, as shown in the bottom illustration in Fig. 24. Another means is by a sharp draw radius. Small radii are susceptible to metal pickup and, depending on sharpness, can produce undesirable circumferential grooves in the hemisphere if the punch does not move at a steady rate.

Reducing Drawn Shells

Necking and nosing are used for reducing the diameter of a drawn cup or shell for a part of its height.

Necking. By the die reduction method, the work metal is forced into compression, resulting in an increase in length and wall thickness. The thicknesses of a shell before and after necking are related by:

$$t_2 = t_1\sqrt{\frac{d_1}{d_2}} \qquad \text{(Eq 9)}$$

and heights before and after necking by the formula:

$$h_2 = h_1\sqrt{\frac{d_1}{d_2}} \qquad \text{(Eq 10)}$$

where t_1 is the shell thickness before necking, t_2 is the shell thickness in the necked area after necking, d_1 is the mean diameter of the shell before necking, d_2 is the mean diameter after necking, h_1 is the unit of height before necking, and h_2 is the unit of height after necking.

Figure 25 shows the flow of metal in a necking operation. As the metal flows, paths of least resistance are taken. Therefore, the actual values for t_2 will be less, and for h_2 greater, than those calculated from Eq 9 and 10.

Necking results are uniformly better if the workpiece has been slightly cold worked. This provides added strength to resist bulging in the column section and buckling in the section being reduced. The entry angle on the necking die is important because the probability that the metal will collapse is decreased as the angle with the vertical becomes smaller. This angle should be less than 45° (Fig. 25). If the angle is greater than 45°, a series of reductions may be necessary, with localized annealing between reducing operations. With a die entry angle less than 45°, thin-wall tubes can be reduced as much as 15% in diameter; thick-wall tubes can be reduced as much as 20%.

Nosing reduces the open end of a shell by tapering or rounding the end (usually by cold reduction) and is primarily used in making ammunition. Shells are often machined before, instead of after, nosing. Shells are usually cold reduced as much as 30% of their original diameter by nosing.

Ironing is the intentional reduction in wall thickness of a shell by confining the metal between the punch and the die wall. When ironing occurs, the force needed to displace the punch often increases to a secondary maximum in the force-displacement curve. The second force maximum can be of such magnitude that the shell will break. However, after ironing has started and metal has been wrapped around the punch, the force is uniform and frequently less than that for redrawing operations.

Ironing is seldom used with redrawing operations unless the amount of wall thinning is relatively small, because it results in excessive die wear, causes workpiece breakage, and increases press tonnage requirements. If a shell with constant wall thickness is needed, however, it can be obtained only by ironing.

Expanding Drawn Workpieces

There are several methods for expanding portions of drawn workpieces in a press. Because the wall thickness is reduced during expansion, it is not advisable to increase the diameter for ductile metal shells (such as low-carbon steel or copper) more than 30%. If a diameter increase of more than 30% is required, the operation should

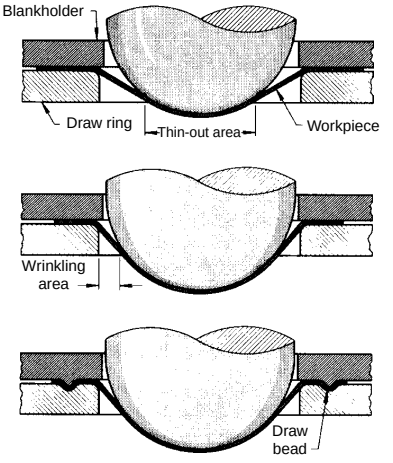

Fig. 24 Drawing of a hemisphere with and without a draw bead. See text for more information.

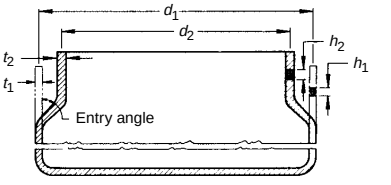

Fig. 25 Flow of metal in the reduction of a drawn shell by necking. See text for details.

Downloaded from http://dl.asminternational.org/handbooks/book/chapter-pdf/246068/a0005121.pdf
by Michael Jobin
on 18 December 2020

be done in two or more stages, with annealing between stages.

Expanding with a Punch. In expanding with a punch, as in Fig. 26, the portion to be expanded is first annealed. Localized annealing, instead of annealing the entire cup, helps retain strength in the remainder of the cup. Regardless of whether or not the strength is required in the finished part, maximum column strength is desirable to prevent buckling as the punch enters the cup.

After the cup has been placed in the die (Fig. 26a), the punch moves downward and expands the top of the cup (Fig. 26b). During the return stroke, the workpiece is stripped from the punch by the stripper ring and is ejected from the die by the ejection pad.

In an expanding operation of this kind, die dimensions are predetermined within reasonably close limits during the design stage. However, the possibility of later design changes must always be considered. Depending on the shape and location of the expanded section, a height reduction of the cup may occur that will require some modification of the die and punch after tryout.

Expanding with segmented dies is often used for forming sidewalls of drawn shells or sections of tubing. The forming segments are contracted by compression springs and expanded radially by a tapered punch. The die is made of two or more segments held apart by compression springs. As the press ram descends, cams move the die segments together. The punch then moves the inner segments outward, thus forming the contours in the sidewall. The presence of gaps between the forming segments is one of the disadvantages of this method and is the reason an alternative method, such as rubber-pad forming, is sometimes selected.

Deep Drawing of Pressure Vessels

Various grades of steel, many of them high-strength alloys, are deep drawn to make cylinders for compressed gases. Joints (when they are made) are around the girth of the vessel, rather than longitudinal. The integrity of the vessel is critical. Commercial-quality hot-rolled steels in the as-rolled condition are generally used. The work metal is usually induction heated or induction annealed to minimize scale.

For propane gas, pressure tanks must have high strength at minimum weight. In one application, the weight of such a tank was reduced from 59 to 32 kg (130 to 70 lb) by changing from 1025 steel to a high-manganese deep-drawing steel (Fe-0.2C-1.6Mn-0.025P-0.3S). Before drawing, the high-manganese steel had a minimum yield strength of 345 MPa (50 ksi) and a minimum tensile strength of 485 MPa (70 ksi).

Bottles for dispensing small quantities of liquefied gases or gases under high pressure are commonly made of drawing-quality low-carbon steel to take advantage of the improved mechanical properties produced by deep drawing. The bottles range in size from 12.7 mm (1/2 in.) in diameter by 32 mm (1 1/4 in.) long to 38 mm (1 1/2 in.) in diameter by 150 mm (6 in.) long.

Deep Drawing Using Fluid-Forming Presses

Fluid forming (also termed hydroforming) is a deep-drawing process that uses only one solid die half. Forming pressure is applied by the action of hydraulic fluid against a flexible membrane, which forces the blank to assume the shape of the rigid tool.

Fluid forming can be used for deep drawing and, in fact, offers advantages over other forming methods. One of these is that the draw radius can be varied by changing the pressure of the hydraulic fluid during the forming operation. This makes it possible to have, for example, a large draw radius at the start of the operation that decreases as the draw continues. Thus, reductions of up to 70% in a single pass are possible when drawing cylindrical cups; for rectangular-shaped parts, a height of six to eight times the corner radius can be obtained in a single operation.

Presses for fluid forming sometimes use a telescoping ram system. Figure 27 shows a schematic of one type of press used for fluid forming. Figure 28 illustrates the deep-drawing process on a press of this type. More information on fluid-forming equipment and processes is available in the article "Rubber-Pad Forming and Hydroforming" in this Volume.

Ejection of Workpieces

In drawing operations, the drawn workpiece may adhere to either the punch or the die. Adherence is increased by depth of draw, straightness of workpiece walls, and viscosity of lubricant. The simplest means of ejecting a small workpiece is by compressed air through jets in the punch or the die. Timed air blast is widely used for ejecting relatively small workpieces, for example, where cup diameter is no greater than 102 to 127 mm (4 to 5 in.). In some production drawing operations, the workpiece is ejected by compressed air, and another timed blast of air from the side removes the piece by sending it down a chute or into a container. However, for larger workpieces or for those that are deep, some other means of ejection is required.

Mechanical methods of ejection include:

- Edge stripping by means of a lip on the draw ring (Fig. 29a) or by a spring-actuated stripper (Fig. 29b)
- The use of a blankholder in combination with an upper ejector (Fig. 30)
- The use of a lower ejector in combination with an upper stripper ring (Fig. 31)

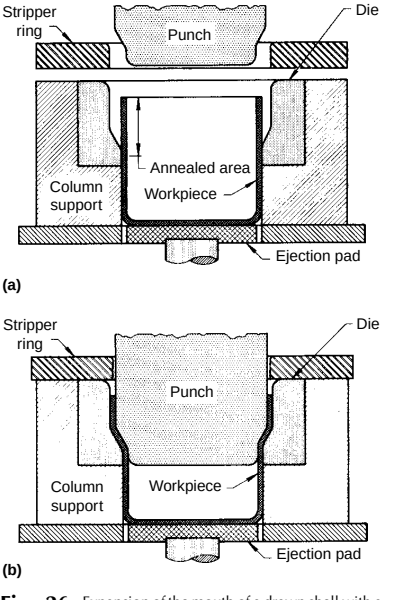

Fig. 26 Expansion of the mouth of a drawn shell with a punch

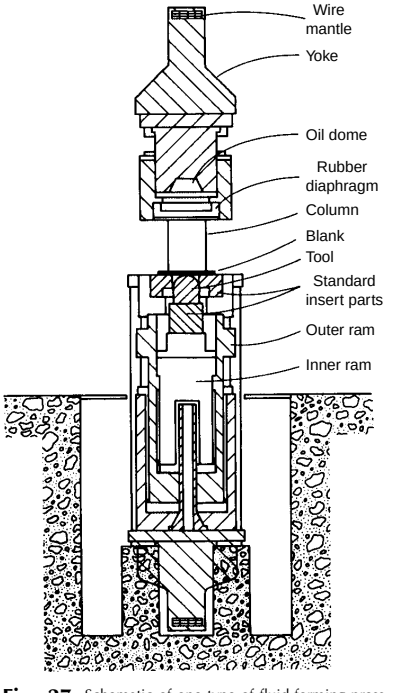

Fig. 27 Schematic of one type of fluid-forming press used for deep drawing

Downloaded from http://dl.asminternational.org/handbooks/book/chapter-pdf/246068/a0005121.pdf
by Michael Jobin
on 18 December 2020

Numerous other mechanical methods using cams or links have been devised to meet specific requirements. These methods are usually modifications of those described previously. For example, thin shells are sometimes stripped from punches near the top of the press stroke by a cam-actuated rod that extends through the punch. This method is often used to avoid damage to the open end of the shell, which can occur when the piece is ejected by other methods. The major factors influencing the method of ejection are workpiece design (especially the presence or absence of a flange), work metal composition and thickness, and the type of equipment available.

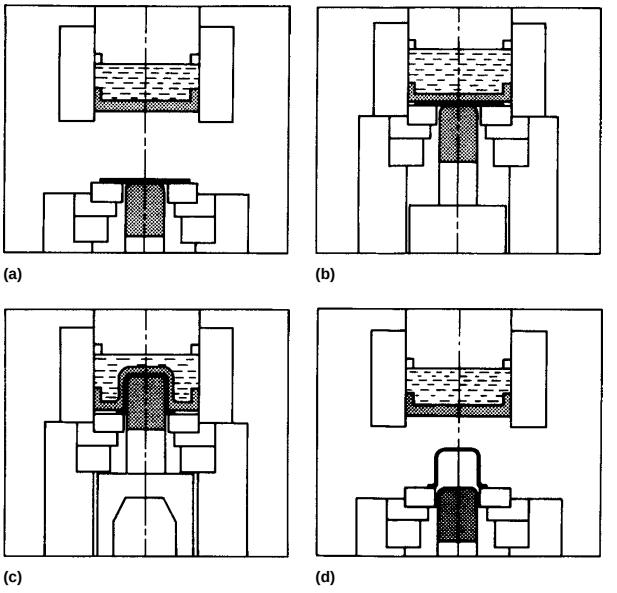

Fig. 28 Deep-drawing process using the fluid-forming press shown in Fig. 27. (a) The blank is placed on the blankholder. (b) The outer ram moves upward, carrying the blank. (c) Oil is pumped into the inner ram system, pressing the punch upward. (d) Outer ram is returned to its initial position, and the punch is retracted to allow removal of the formed part.

Trimming

Trimming in a lathe (using a cutting tool), roll trimming in a lathe, rotary shearing, die trimming (regular and pinch), and trimming on special machines are the methods most commonly used for trimming drawn workpieces.

Methods for Specific Shapes. Cylindrical workpieces, such as the one shown in Fig. 32a, can be trimmed by at least four different methods:

- In a lathe, with a cutting tool, but production cost is high
- By roll trimming in a lathe or in a rotary shear. Production cost is lower than that for trimming with a cutting tool, but the finish of a rolled edge is poor and maintenance cost of the rolls is high.
- By pinch trimming in the press at the bottom of the drawing stroke. This involves almost no increase in production cost but requires a more expensive die. This method produces a thinned edge at the trim line, which may be unacceptable.
- In a shimmy die or trimming machine, but production quantities must be high to warrant the investment

Cylindrical workpieces with flanges, such as the one shown in Fig. 32b, can also be trimmed in a lathe, although shapes such as this are ideal for trimming in a die and can be die trimmed for approximately 5% of the cost of trimming in a lathe. Rotary shearing can also be used for trimming circular drawn parts with flanges if the dimensional tolerance is 0.76 mm (0.030 in.) or more. Drawn workpieces with an irregular trim line, as in Fig. 32c, can be trimmed in a die for

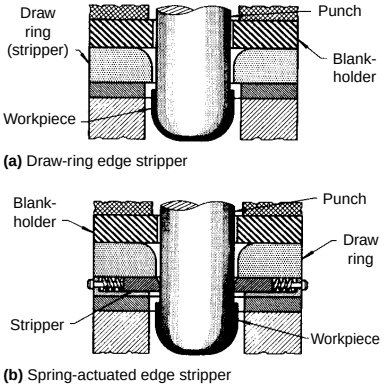

Fig. 29 Setups showing two methods of ejecting a drawn workpiece through the bottom of the press by edge stripping

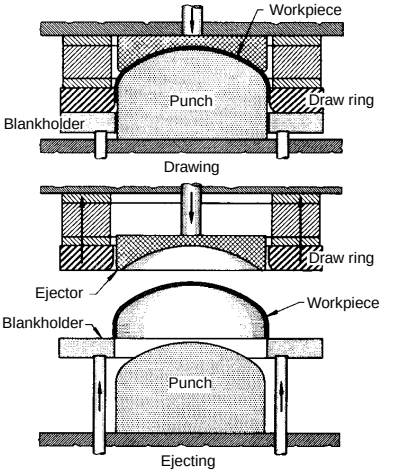

Fig. 30 Use of a blankholder and ejector for stripping of a drawn workpiece from inverted dies

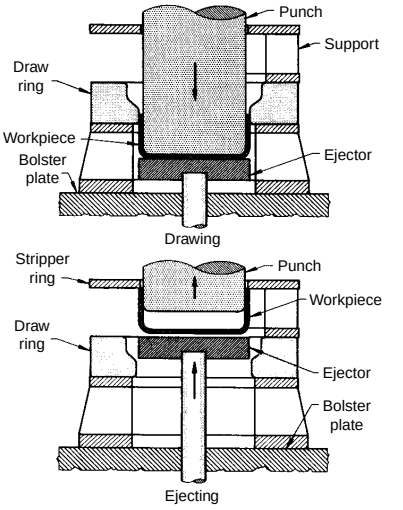

Fig. 31 Setup in which drawn workpiece is lifted from the die by an ejector and is stripped off the punch by a fixed stripper ring

Downloaded from http://dl.asminternational.org/handbooks/book/chapter-pdf/246068/a0005121.pdf
by Michael Jobin
on 18 December 2020

low-production requirements, or with a shimmy die or trimming machine for high-production requirements. The cost of a trimming die is approximately half that for a special trimmer (excluding the cost of the original machine). However, the trimming cost per piece with the special trimmer will be only approximately half the per-piece cost with multiple dies, and the trimmed edges will be better.

Flanged workpieces, such as the one shown in Fig. 32d, can be trimmed in a die for 5% of the cost of trimming in a rotary shear. In low production, drawn workpieces of such a shape are frequently trimmed in a nibbler and filed to conform to a template. This means of trimming costs up to 60 times as much as die trimming.

Developed Blanks versus Final Trimming

The most important factor that influences a choice between using a developed blank or a final trimming operation is whether or not the shape of the drawn edge is acceptable. A semi-developed blank is sometimes necessary to draw an acceptable part, and the edge must be trimmed to meet dimensional tolerances.

The next consideration is the cost of blanking versus final trimming. This would include the adaptability of the process to the available equipment, based on expected production requirements. The principal advantage of a developed blank is that strip or coiled work metal can be used. The use of strip eliminates the need for shearing the work metal to a rough-blank shape, as is sometimes required when final trimming is used. The developed-blank approach is usually more economical than final trimming because a blanking die is frequently less expensive than a final-trimming die.

When using developed blanks, the draw dies are made, and several blanks are drawn to select the optimal developed shape before the blanking die is made. This causes a delay in placing the draw die into production. However, with proper planning and scheduling, this should not be a problem. Another disadvantage of developed blanks occurs when variations in work metal properties and thickness are sufficient to affect the uniformity of the drawn workpiece. Under these conditions, closer tolerances are obtained by final trimming. It is possible to develop blank contours accurately enough so that the outline of the drawn part is within tolerance, thus avoiding a final-trimming operation.

Cleaning of Workpieces

In general, the more effective the lubricant, the more difficult it is to remove. Therefore, an overly effective drawing lubricant should be avoided.

The cleaning method depends on the work metal composition, the lubricant, the degree of cleanliness required, workpiece shape, and sometimes the length of time between application of lubricant and its removal. Some metals will be attacked by cleaners that are not harmful to others. For example, strong alkaline cleaners are suitable for cleaning steel and many other metals, but they are likely to attack aluminum alloys. Detailed information is available in the articles on the surface engineering of specific metals in *Surface Engineering,* Volume 5, *ASM Handbook,* 1994.

Unpigmented oils and greases can be removed from steel workpieces by several simple shop methods, including alkaline dipping, emulsion cleaning, and cold solvent dipping. These methods are usually sufficient for in-process cleaning. However, if the workpieces are to be painted, a more thorough cleaning by emulsion spray or vapor degreasing is required. For plating, electrolytic cleaning plus etching in acid (immediately prior to plating) is required. These latter methods usually follow a rough cleaning operation.

Pigmented drawing lubricants and waxes greatly increase cleaning problems. At a minimum, in-process cleaning usually requires slushing in a hot emulsion or vapor degreasing. If the lubricant is not removed for several days after application, soaking in a hot alkaline cleaner or an emulsion cleaner may be required. Particularly for complex workpiece shapes, some hand or power brush scrubbing may be needed. If the workpieces are to be painted or plated, additional cleaning will be required, as described previously. Detailed information on the choice of cleaning method is available in the article "Classification and Selection of Cleaning Processes" in *Surface Engineering,* Volume 5, *ASM Handbook,* 1994.

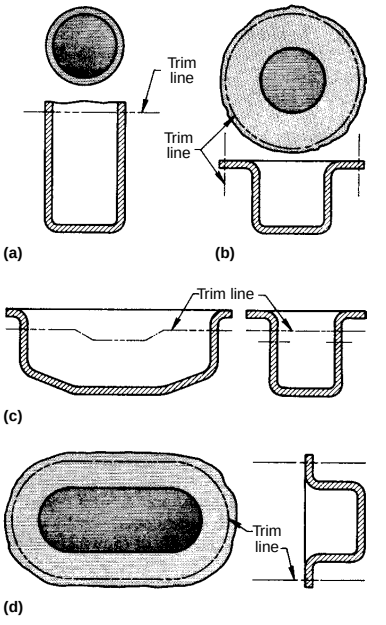

Fig. 32 Typical trim lines on drawn parts. See text for details.

Dimensional Accuracy

Dimensional accuracy in deep drawing is affected by the variation in work metal thickness, variation in work metal condition (chiefly hardness), drawing technique (particularly the number of operations), accuracy of the tools, rate of tool wear, and press condition. Control of dimensions begins with the purchase of sheet to closer-than-commercial thickness tolerance, which adds substantially to the cost. Close control of sheet hardness also costs more. In-process annealing may be required to minimize springback or warpage; it will not be needed if tolerances are more liberal. Annealing, handling, and cleaning operations are costly.

As tolerances become closer, it is often necessary to add more die stations to minimize the amount of drawing in any one station. Close tolerances may demand restriking operations that would not be necessary for parts with more liberal tolerances. Additional operations increase tool costs and decrease productivity, thus increasing the cost per piece.

The initial cost of tools increases as tolerances become closer because of greater cost for precision machining and grinding or more costly tool materials. In addition, tool life before reconditioning and total tool life decrease as tolerances become closer. Maintenance costs and downtime of presses are also greater.

When required, extremely close tolerances can be maintained on some parts (Fig. 33).

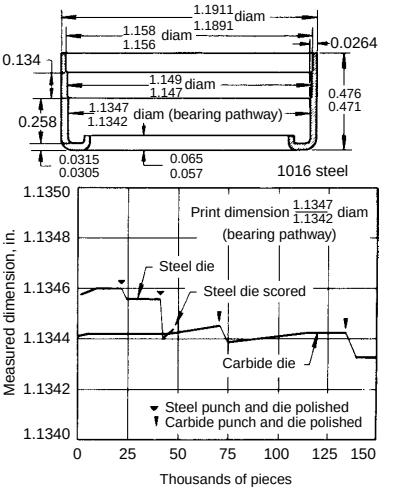

Fig. 33 Variation in bearing pathway diameter of a needle bearing cup drawn using high-speed tool steel and carbide dies

Downloaded from http://dl.asminternational.org/handbooks/book/chapter-pdf/246068/a0005121.pdf
by Michael Jobin
on 18 December 2020

In most deep drawing, the accuracy shown in Fig. 33 is either impossible or impractical. The more usual practice when dimensional accuracy is important is to check critical dimensions at specified intervals during a production run and to plot the variation. Data from this method of quality control show the capabilities of the process under shop conditions and the magnitude of drift during a production run. When results (either initially or during a run) are unacceptable, one or more of the controls discussed at the beginning of this section can be applied.

Safety

Deep drawing, like other press operations, involves potential hazards to operators and other personnel in the work area. No press, die, or auxiliary equipment can be considered ready for operation until these hazards are eliminated by the installation of necessary safety devices. Operators should be properly instructed in safe operation of equipment.

REFERENCE

1. O.D. Lascoe, *Handbook of Fabrication Processes,* ASM International, 1988, p 233

SELECTED REFERENCES

- M. Groover, *Fundamentals of Modern Manufacturing: Materials, Processes, and Systems,* Prentice-Hall, 1996, p 500–542
- W. Hosford and R. Caddell, *Metal Forming: Mechanics and Metallurgy,* 2nd ed., Prentice-Hall, 1993, p 244–358
- *Inform: The Magazine for Metalforming,* Schuler SMG GmbH & Co. KG, Feb 2000, p 32–33
- S. Kalpakjian and S. Schmid, *Manufacturing Engineering and Technology,* 4th ed., Prentice-Hall, 2001, p 392–434
- *Lightweight Vehicle Systems Materials,* Department of Energy Annual Progress Report, 1999, p 12–18
- *Lightweight Vehicle Systems Materials,* Department of Energy Annual Progress Report, 2001, p 13–19
- *Lightweight Vehicle Systems Materials,* Department of Energy Annual Progress Report, 2002, p 9–18
- K. Siegert, S. Wagner, and M. Siegler, Robust Forming Process by Pulsating Blankholder Forces, Multipoint Cushion Systems and Closed Loop Control, *Sheet Metal Forming Technology,* M.Y. Demeri, Ed., TMS, 1999, p 1–21

Downloaded from http://dl.asminternational.org/handbooks/book/chapter-pdf/246068/a0005121.pdf
by Michael Jobin
on 18 December 2020