(19) Europäisches Patentamt
European Patent Office
Office européen des brevets

(11) EP 1 849 718 A1

(12) EUROPEAN PATENT APPLICATION

(43) Date of publication:
31.10.2007 Bulletin 2007/44

(51) Int Cl.:
B65D 85/804 *(2006.01)*

(21) Application number: **07106724.3**

(22) Date of filing: **23.04.2007**

(84) Designated Contracting States:
AT BE BG CH CY CZ DE DK EE ES FI FR GB GR HU IE IS IT LI LT LU LV MC MT NL PL PT RO SE SI SK TR
Designated Extension States:
AL BA HR MK YU

(30) Priority: **24.04.2006 IT RM20060227**

(71) Applicant: **Cafè do Brasil S.p.A.**
80129 Napoli (IT)

(72) Inventor: **Rubino, Michele**
c/o Cafè do Brasil S.p.A.
80129 Napoli (IT)

(74) Representative: **Papa, Elisabetta et al**
Società Italiana Brevetti S.p.A
Piazza di Pietra, 38-39
00186 Roma (IT)

(54) Monodose capsule containing a preparation for beverages

(57) A capsule (1) containing ground coffee (C) for making a beverage in an extraction process envisaging the passing through the capsule itself by an extraction fluid, said capsule (1) comprising a cylindrical main body (2, 3, 4) defining an internal housing (10) for receiving the coffee (C), said main body (2, 3, 4) having, in correspondence of the lateral wall (4) of the housing (10), a plurality of longitudinal grooves (5) arranged in the direction of the fluid flow in the extraction process and apt to convey such a fluid through the capsule (1) itself (Figure 8).

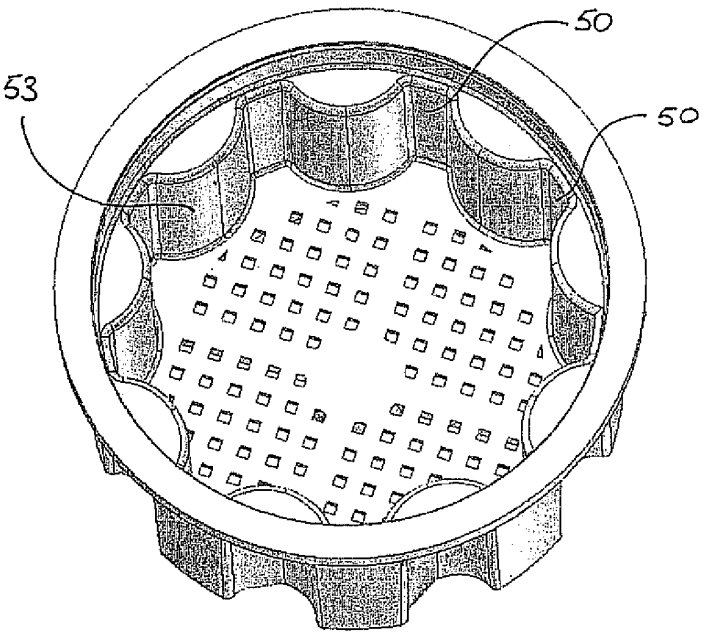

FIG. 8

EP 1 849 718 A1

Printed by Jouve, 75001 PARIS (FR)

Description

[0001] The present invention refers to a single-dose capsule containing a substantially granular infusion for making beverages such as coffee and the like.

[0002] In the last few years, machines for making hot beverages such as coffee, tea, chocolate and the like from a pre-metered single-dose and single-use capsule containing a preparation in the form of a substantially granular infusion have become ever more widespread. Said machines envisage the capsule to be passed through by a liquid, typically water and/or milk, at a certain temperature and pressure, thereby obtaining, out of the capsule, the end beverage. This making process is commonly indicated as 'extraction' of the beverage from the capsule.

[0003] Said machines are typically used at offices and workplaces in general.

[0004] As to the capsules, several embodiments thereof do exist, both in terms of shape and materials used. However, one of the problems still unsolved of the capsules at issue is represented by the optimization of brewing conditions, and in particular by the option of obtaining, through the capsule, a liquid flow even and optimal from the standpoint of the resulting beverage. For this purpose, a drawback often found is represented by the fact that the liquid passes through privileged portions of the capsule only, instead of throughout the internal housing receiving the infusion. Moreover, the significant parameters of the flow passing through the capsule, like, e.g., speed and direction, may variously be affected by its shape, often even in a way and to an extent *a priori* unforeseeable, to the detriment of the quality of the end beverage and of the repeatability of its features, e.g. in terms of taste and density.

[0005] Hence, the technical problem set and solved by the present invention is to provide a capsule for making beverages of the above-mentioned type, allowing to overcome the drawbacks hereto-mentioned with reference to the known art.

[0006] Such a problem is solved by a capsule according to claim 1.

[0007] Preferred features of the present invention are present in the dependent claims thereof.

[0008] In the present context, the term 'capsule' is used in its most general meaning, encompassing also pods or cartridges and generally any member containing a preparation for beverages in the form of infusion.

[0009] The present invention provides several relevant advantages. The main advantage lies in the fact that the internal grooves of the capsule attain optimal flow conditions for the liquid passing through the capsule itself, to the advantage of the quality and repeatability of the end beverage and also of the correct operation of the associated machines, which are not subject to unforeseeably variable flow conditions.

[0010] Other advantages, features and the operation steps of the present invention will be made apparent in the following detailed description of some embodiments thereof, given by way of example and not for limitative purposes. Reference will be made to the figures of the annexed drawings, wherein:

- Figure 1 shows a front perspective view of a capsule according to an embodiment of the invention;
- Figure 2 shows a bottom perspective view of the capsule of Figure 1;
- Figure 3 shows a side perspective view from the top of the capsule of Figure 1;
- Figure 4 shows a side perspective view from the bottom of the capsule of Figure 1;
- Figure 5 shows a front perspective view from the top of a top portion of the capsule of Figure 1;
- Figure 6 shows a front perspective view from the bottom of said top portion of the capsule of Figure 1;
- Figure 7 shows a sectional view of the capsule of Figure 1 without the powder infusion contained therein; and
- Figure 8 shows a top perspective view of the capsule of Figure 1, in which the infusion contained therein and said top portion have been removed.

[0011] Referring to the above-introduced figures, a single-dose and single-use capsule containing a substantially granular infusion and apt to be used for making a beverage by extraction process is generally denoted by 1. In the present embodiment the capsule 1 contains ground coffee (not depicted for simplicity's sake).

[0012] The capsule 1 comprises a main body of substantially cylindrical overall geometry, which has just a longitudinal axis of symmetry A. In particular, the main body is comprised of a top face 2 and a bottom face 3 having a substantially circular contour, and of a lateral surface or skirt 4 bearing a plurality of grooves that will be detailed hereinafter. Such top and bottom faces 2 and 3 and lateral skirt 4 define an internal housing 10 of the capsule 1, better seen in Figures 7 and 8, receiving the ground coffee.

[0013] In correspondence of the top face 2 the main body of the capsule 1 has a peripheral edge 6 having annular contour, projecting with respect to the lateral surface 4, a raised band 7, it also of annular contour and arranged internally with respect to the peripheral edge 6, and a substantially disc-like central portion 8. The latter is of rigid or semirigid type, and preferably made of plastics material. The extraction fluid fed by the machine for making the beverage should just enter the internal housing 10 through said disc-like portion 8, which to this end bears small holes 81 distributed according to a substan-

IPR2023-00485
Nespresso USA, Inc. Ex. 1034
Page 2 of 10

tially radial symmetry.

[0014] According to a variant embodiment, said top face may be made, e.g., of a porous filtering material, e.g. a paper material peripherally adhered on a peripheral edge having an annular contour alike the hereto-introduced one. In that case, no raised band is envisaged.

[0015] Depending on the specific implementation, the disc-like portion 8 may be piece-formed with the remainder of the main body, and in particular with said edges 6 and 7, or made integral to the peripheral edge 6, e.g. by heat-resistant glues, as already mentioned hereto.

[0016] In correspondence of the bottom face 3, better seen in Figure 2, the main body of the capsule 1 provides a central disc-like portion 9 through which the beverage has to come out, and that therefore may have an embodiment alike that of the above-described top portion 8.

[0017] The disc-like portion 9 is inscribed in a projecting annular band 11, indented with respect to the lateral skirt 4.

[0018] As mentioned above, in correspondence of its lateral skirt 4 the main body of the capsule 1 has a plurality of concave external grooves 5, identical the one to the other and equally distributed over the entire lateral extension of the skirt 4 itself according to an axial geometry. The grooves 5 develop in a direction substantially parallel to axis A of the capsule 1 and are partitioned by external longitudinal ribs 52. Also the latter are identical the one to the other, equally distributed over the entire lateral extension of the skirt 4, and develop along a direction substantially parallel to the axis A of the capsule 1.

[0019] As it is better seen in Figure 8, the external ribs 52 are internally hollow, thereby producing in correspondence of the housing 10 a plurality of grooves or internal notches 50 of the capsule itself. Therefore, said internal notches 50 define longitudinal portions of the housing 10 inside which part of the ground coffee is received. The presence and arrangement of the notches 50 allows, as already mentioned above, optimal conveyance of the extraction fluid within the capsule 1, preventing stagnation, allowing to accurately control and foresee the properties of said flow and generally to optimize the extraction process.

[0020] Said advantages are enhanced by the specific configuration selected for the internal 50 and external 5 grooves, providing each of the former ones to have a development with a substantially plane bottom wall, wherein adjacent external grooves 5 have a convex internal contour substantially arched, following in particular substantially an arc of circumference. Internally to the housing 10 the external grooves 5 define a plurality of corresponding bulges 53.

[0021] Moreover, in the present embodiment the external 5 and internal 50 grooves involve only the bottom portion of the lateral skirt 5. Above the portion involved by said grooves, the lateral skirt 4 has instead a portion 41 with a substantially annular and continuous development 41 adjacent to the top face 2. Such a contrivance further improves the above-disclosed abilities to convey the extraction fluid.

[0022] It will be understood that the invention further refers to an automatic machine for making coffee or other beverages, comprising a housing specifically shaped for receiving the hereto-described capsule of the invention. In particular, said housing will bear a configuration complementary to the above-illustrated one of the grooves 5 and ribs 52.

[0023] The present invention has been hereto described with reference to preferred embodiments thereof. It is understood that other embodiments might exist, all falling within the concept of the same invention, and all comprised within the protective scope of the claims hereinafter.

Claims

1. A capsule (1) of the type containing or apt to contain a substantially granular infusion for making beverages such as coffee and the like in an extraction process providing the passing through the capsule itself by an extraction fluid, said capsule (1) comprising a main body (2, 3, 4) defining an internal housing (10) apt to receive said infusion (C), **characterized in that** said main body (2, 3, 4) has, in correspondence of at least part of the lateral wall (4) of said housing (10), a plurality of internal longitudinal grooves (50) arranged substantially in the direction of the extraction fluid flow and apt to convey such a fluid through the capsule (1) itself.

2. The capsule (1) according to claim 1, wherein said internal grooves (50) involve the entire transversal extension of the lateral wall (4) of said housing (10).

3. The capsule (1) according to claim 1 or 2, wherein said internal grooves (50) are equally distributed over said lateral wall (4).

4. The capsule (1) according to any one of the preceding claims, wherein said housing (10) is defined by a top wall (2) in correspondence of which the extraction fluid enters the capsule (1) and wherein said lateral wall (4) has a top portion (41) adjacent to said top wall (2) and void of said internal grooves (50).

5. The capsule (1) according to any one of the preceding claims, wherein said internal grooves (50) have a substantially plane bottom contour.

6. The capsule (1) according to any one of the preceding claims, wherein said main body (2, 3, 4) has, in correspondence of at least part of the lateral wall (4) of said housing (10), a plurality of longitudinal bulges (53) alternating with said internal grooves (50).

7. The capsule (1) according to the preceding claim,

IPR2023-00485
Nespresso USA, Inc. Ex. 1034
Page 3 of 10

wherein said internal bulges (53) have a substantially arched contour.

8. The capsule (1) according to the preceding claim, wherein said internal bulges (53) have a contour substantially like an arc of circumference.

9. The capsule (1) according to any one of the preceding claims, wherein said main body (2, 3, 4) has a substantially cylindrical geometry and said lateral wall (4) represents the lateral skirt of the cylinder.

10. The capsule (1) according to any one of the preceding claims, wherein said main body (2, 3, 4) has a top face (2) is at least partly made of a substantially porous material.

11. The capsule (1) according to the preceding claim, wherein said main body (2, 3, 4) has a top face (2) at least partly made of a paper material.

12. The capsule (1) according to any one of the claims 1 to 9, wherein said main body (2, 3, 4) has a top face (2) at least partly made of a substantially impermeable material provided with small holes (81) to allow the entering of the extraction fluid into the capsule (1) itself.

13. The capsule (1) according to the preceding claim, wherein said main body (2, 3, 4) has a top face (2) at least partly made of a plastic material.

14. The capsule (1) according to any one of the preceding claims, wherein said main body (2, 3, 4) has a bottom face (3) at least partly made of a substantially porous material.

15. The capsule (1) according to the preceding claim, wherein said main body (2, 3, 4) has a bottom face (3) at least partly made of a paper material.

16. The capsule (1) according to any one of the claims 1 to 13, wherein said main body (2, 3, 4) has a bottom face (3) at least partly made of a substantially impermeable material provided with small holes to allow the exiting of the extraction fluid from the capsule (1) itself.

17. The capsule (1) according to the preceding claim, wherein said main body (2, 3, 4) has a bottom face (3) at least partly made of a plastic material.

18. The capsule (1) according to any one of the preceding claims, which is a single-dose capsule (1).

19. The capsule (1) according to any one of the preceding claims, containing ground coffee (C) received in said housing (10).

20. The capsule (1) according to any one of the preceding claims, having an external lateral skirt (4) bearing a shaped external contour complementarily reproducing said internal grooves (50), such a contour being provided with longitudinal ribs (52) in correspondence of said internal grooves (50).

21. An automatic machine for making beverages such as coffee and the like from a capsule (1) according to the preceding claim and containing a substantially granular infusion, said machine comprising: extraction means apt to cause the passing through the capsule itself by an extraction fluid; and a housing apt to receive said capsule (1) and having a contour of shape substantially complementary to that of the shaped external contour of the capsule itself.

IPR2023-00485
Nespresso USA, Inc. Ex. 1034
Page 4 of 10

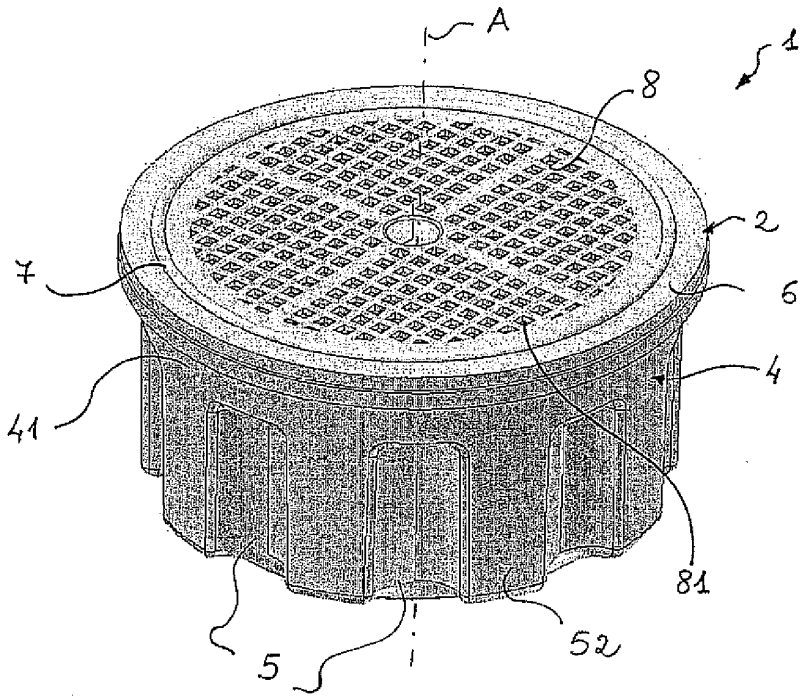

FIG. 1

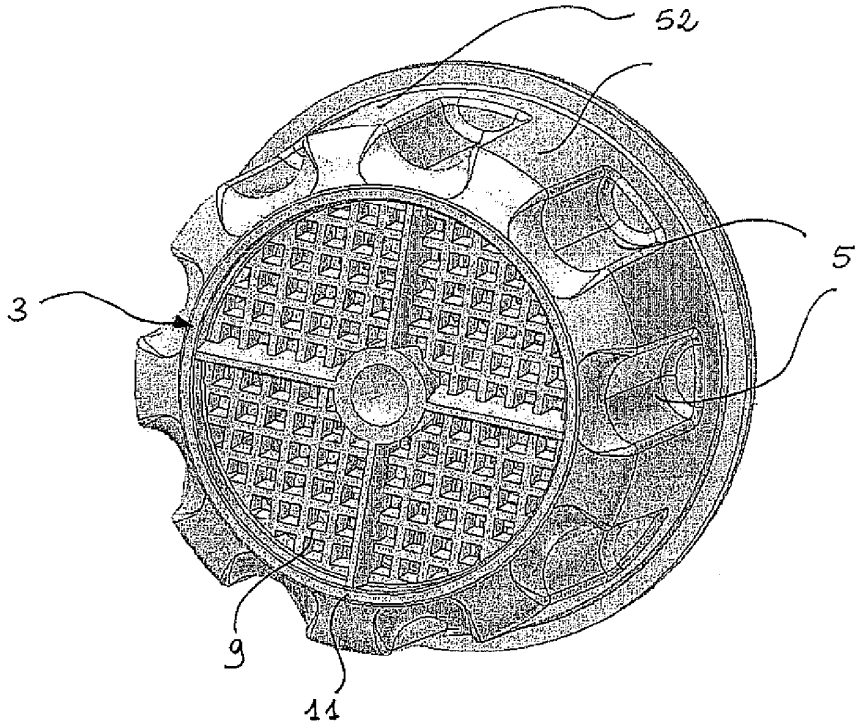

FIG. 2

IPR2023-00485
Nespresso USA, Inc. Ex. 1034
Page 5 of 10

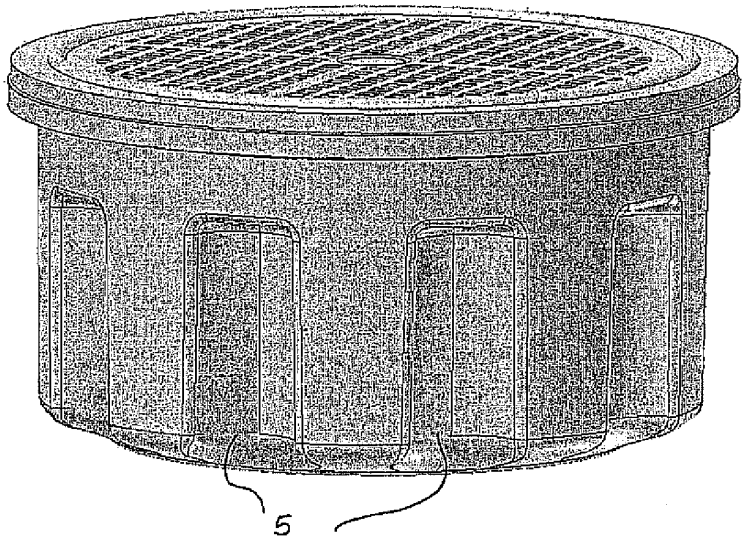

FIG. 3

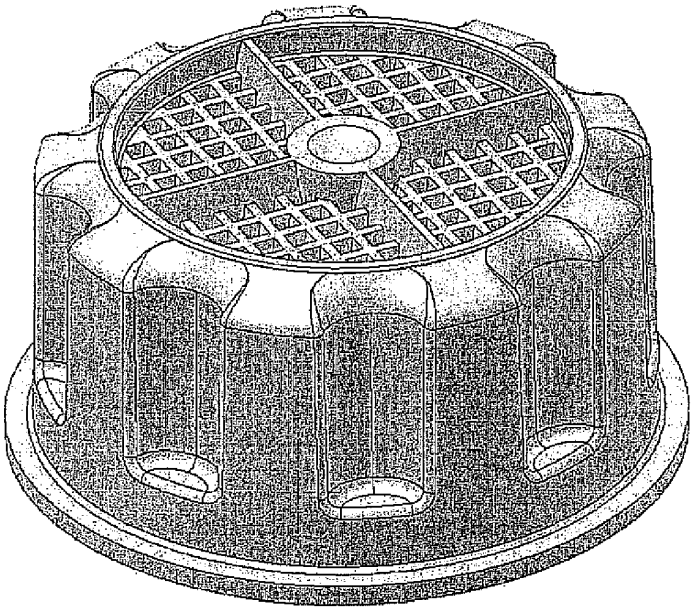

FIG. 4

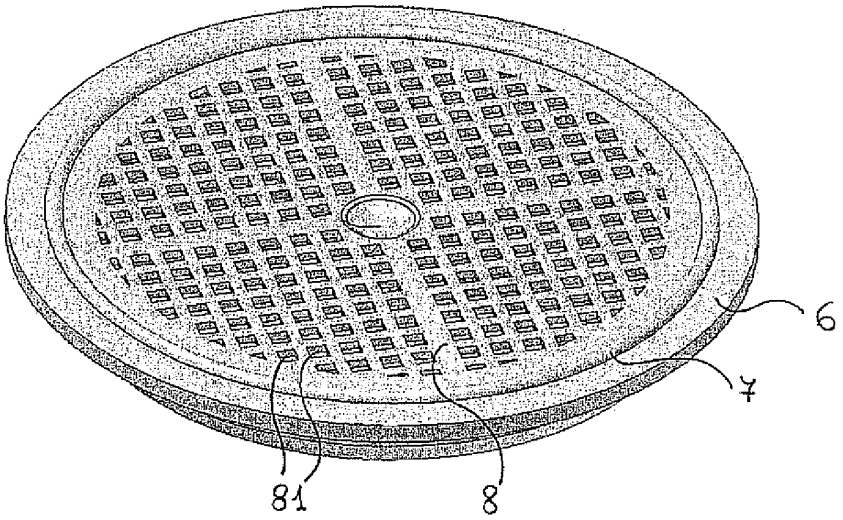

FIG. 5

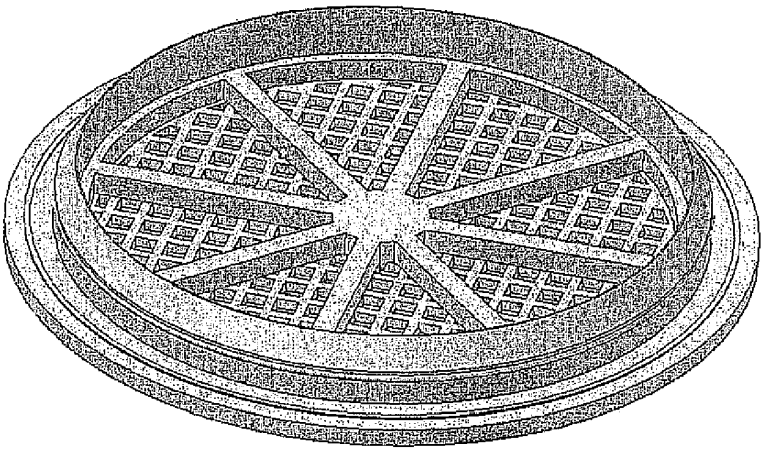

FIG. 6

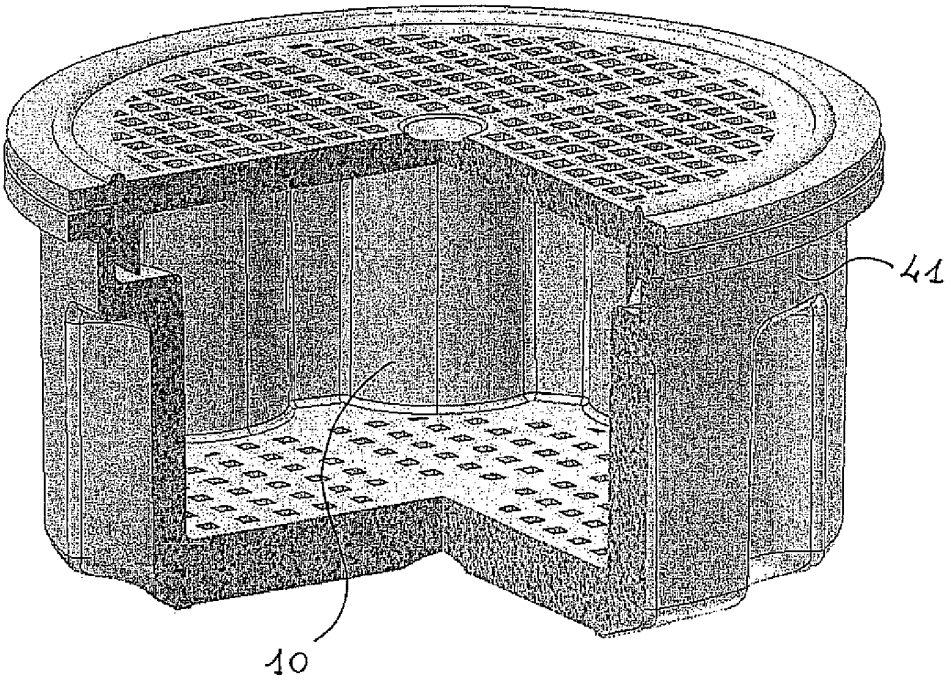

FIG. 7

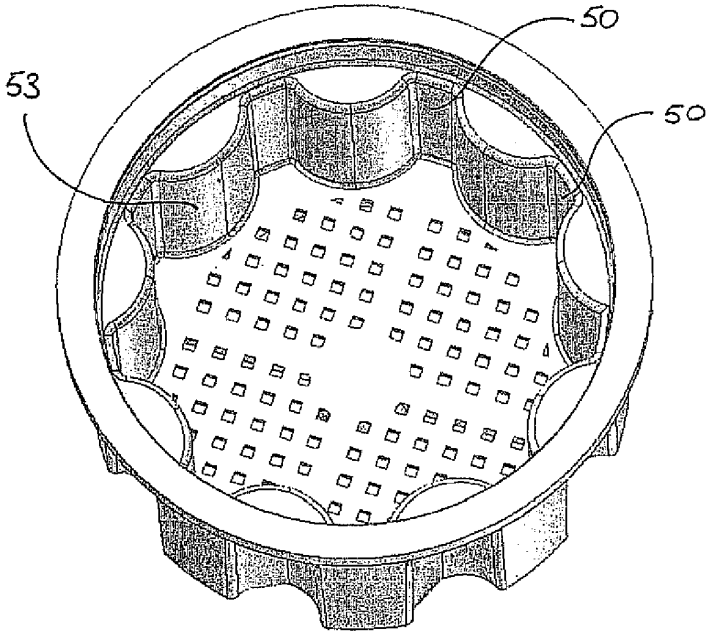

FIG. 8

European Patent Office

EUROPEAN SEARCH REPORT

Application Number
EP 07 10 6724

DOCUMENTS CONSIDERED TO BE RELEVANT

Category	Citation of document with indication, where appropriate, of relevant passages	Relevant to claim	CLASSIFICATION OF THE APPLICATION (IPC)
X	US 4 800 089 A (SCOTT GEORGE W [US]) 24 January 1989 (1989-01-24) * column 1, line 58 - column 2, line 42; figure 4 * -----	1-3,5, 9-11,14, 15,18-21	INV. B65D85/804
X	US 3 309 980 A (BOZEK JOHN S) 21 March 1967 (1967-03-21) * the whole document * -----	1-3,6-9, 12,13, 16-21	
A	DE 34 32 339 A1 (GESEN WOLFGANG; SCHULTE WILHELM) 13 March 1986 (1986-03-13) * the whole document * -----	1	

TECHNICAL FIELDS SEARCHED (IPC)

B65D

The present search report has been drawn up for all claims

Place of search	Date of completion of the search	Examiner
Munich	30 July 2007	Balz, Oliver

CATEGORY OF CITED DOCUMENTS

X : particularly relevant if taken alone
Y : particularly relevant if combined with another document of the same category
A : technological background
O : non-written disclosure
P : intermediate document

T : theory or principle underlying the invention
E : earlier patent document, but published on, or after the filing date
D : document cited in the application
L : document cited for other reasons
.....
& : member of the same patent family, corresponding document

2

EPO FORM 1503 03.82 (P04C01)

IPR2023-00485
Nespresso USA, Inc. Ex. 1034
Page 9 of 10

ANNEX TO THE EUROPEAN SEARCH REPORT ON EUROPEAN PATENT APPLICATION NO. EP 07 10 6724

This annex lists the patent family members relating to the patent documents cited in the above-mentioned European search report.
The members are as contained in the European Patent Office EDP file on
The European Patent Office is in no way liable for these particulars which are merely given for the purpose of information.

30-07-2007

Patent document cited in search report	Publication date	Patent family member(s)	Publication date
US 4800089 A	24-01-1989	NONE	
US 3309980 A	21-03-1967	NONE	
DE 3432339 A1	13-03-1986	NONE	

EPO FORM P0459

For more details about this annex : see Official Journal of the European Patent Office, No. 12/82