(19) Europäisches Patentamt
European Patent Office
Office européen des brevets

(11) Publication number : **0 455 337 B1**

(12) **EUROPEAN PATENT SPECIFICATION**

(45) Date of publication of patent specification :
08.06.94 Bulletin 94/23

(51) Int. Cl.[5] : **B65D 81/00**

(21) Application number : **91302538.3**

(22) Date of filing : **22.03.91**

(54) **Method of beverage preparation.**

(30) Priority : **30.03.90 GB 9007149**

(43) Date of publication of application :
06.11.91 Bulletin 91/45

(45) Publication of the grant of the patent :
08.06.94 Bulletin 94/23

(84) Designated Contracting States :
AT BE CH DE DK ES FR GB GR IT LI LU NL SE

(56) References cited :
EP-A- 0 334 573

(73) Proprietor : **KRAFT GENERAL FOODS LIMITED**
St. George's House,
Bayshill Road
Cheltenham, Glos, GL50 3AE (GB)

(72) Inventor : **Bentley, Andrew Charles**
26, Nuffield Drive
Banbury, Oxon, OX16 7BX (GB)
Inventor : **King, Christine Anne**
7 Horton Drive, Middleton Cheney
Banbury, Oxon, OX17 2LP (GB)
Inventor : **MacMahon, Alistair John**
12 Westminster Croft
Brackley, Northants, NN13 5ED (GB)
Inventor : **Newman, Alec Thomas**
Greenways, Warmington
Banbury, Oxon (GB)
Inventor : **Tansley, Robert William**
The Elms, Tiddington Road
Tiddington, Stratford, Warks (GB)

(74) Representative : **Allard, Susan Joyce et al**
BOULT, WADE & TENNANT
27 Furnival Street
London EC4A 1PQ (GB)

EP 0 455 337 B1

Note : Within nine months from the publication of the mention of the grant of the European patent, any person may give notice to the European Patent Office of opposition to the European patent granted. Notice of opposition shall be filed in a written reasoned statement. It shall not be deemed to have been filed until the opposition fee has been paid (Art. 99(1) European patent convention).

Jouve, 18, rue Saint-Denis, 75001 PARIS

Description

The present invention relates to packages containing ingredients for the preparation of beverages and, in particular, to sealed packages which are formed from a substantially air- and water-impermeable material and which contain one or more ingredients for the preparation of beverages.

It has previously been proposed to seal beverage preparation ingredients in individual air-impermeable packages. For example, cartridges or capsules containing compacted ground coffee are known for use in certain coffee making machines which are generally termed "espresso" machines. In the production of coffee using these coffee machines the coffee cartridge is placed in a brewing chamber and hot water is generally caused to pass under pressure through the cartridge, thereby extracting the aromatic coffee constituents from the ground coffee and producing a coffee beverage.

Cartridges containing roast and ground coffee in which hot water flows under gravimetric force through the cartridge are also known. A cartridge of this general type is described in British Patent No. 1397116.

In our European Patent Application No. 87311325.2 there is described a package which contains at least one beverage preparation ingredient, e.g. roast and ground coffee. In a preferred embodiment the package is formed from a substantially air- and water-impermeable material and comprises a sealed body portion having a compartment containing the beverage ingredient and an outlet channel, the compartment and the outlet channel co-operating in such a manner that, in use, the beverage is filtered, thereby avoiding the necessity for an external filter.

There is also described in European Patent Application No. 87311325.2, a method for preparing a beverage which comprises positioning a beverage containing package at a brewing station, introducing water through water introduction means into the package, allowing the water to commingle with the beverage ingredient, and collecting the beverage so-formed through an outlet formed in the package.

The beverage packages as described in European Patent Application No. 87311325.2 are primarily intended to be used with a beverage preparation machine which handles the packages automatically or semi-automatically. A machine of this type is described in our European Patent Application No. 89302708.6. The packages may contain roast and ground coffee, leaf tea or one or more powdered beverage preparation ingredients such as powdered chocolate, powdered coffee or powdered soup.

We have now developed a package containing one or more ingredients for the preparation of beverages in which a filter is disposed in such a manner that the beverage so produced is filtered upwardly through the filter.

Accordingly, the present invention provides a method for the preparation of a beverage from a sealed package containing one or more beverage preparation ingredients located in a compartment in the package, which method comprises introducing a liquid medium suitable for the preparation of the beverage under pressure into the package through an inlet formed therein, causing the liquid medium to enter the compartment thereby forming the beverage, and collecting the beverage so formed from an outlet formed in the package, characterised in that the beverage is filtered in an upwardly direction through a filter.

The beverage package used in the present invention preferably has a body portion which may be formed, for example, from a moulded plastics material. The inlet and/or outlet of the package may be closed by a plug of a plastics material moulded into the inlet and/or outlet nozzle during the moulding of the body portion. Alternatively, the inlet and/or outlet may be covered by a substantially air- and water-impermeable material, for example aluminium foil or a laminated material, such as a laminate of plastic material/metal foil/plastic material, prior to the opening of the inlet and/or outlet. Specific examples of materials which can be used are aluminium foil having a thickness in the range of from 30 to 60 micrometres coated with a layer of polypropylene or a laminate of polypropylene/aluminium foil/polyester.

The outlet in the package may be prepared during the beverage preparation cycle using a cutting and piercing tool for example of the type as described in our European Patent Application No. 89302708.6.

Alternatively, the inlet and/or outlet may be open and the beverage package provided with an outer wrapping or the like. For example, a plurality of packages may be provided with a shrink wrapped outer layer.

In the packages used in the present invention, the communication between the inlet and the compartment containing the beverage preparation ingredient(s) is preferably via a channel which is separated from the compartment by a wall which has a plurality of openings formed therein for the entry of a liquid medium into the compartment. The channel preferably extends along at least one side of the compartment, more preferably along three sides of the compartment. The openings in the wall are preferably in the form of elongate slots which are generally arranged in a manner such that an even distribution of the liquid medium through the beverage preparation ingredients is acheived.

The filter is preferably made from a material with a high wet strength, for example a non-woven polyester fibre material or polypropylene. Other materials which may be used include a water-permeable cellu-

IPR2023-00485
Nespresso USA, Inc. Ex. 1036
Page 2 of 11

losic material, such as a cellulosic material comprising woven paper fibres. The woven paper fibres may be admixed with fibres of polypropylene, polyvinylchloride and/or polyethylene. The incorporation of these plastics materials into the cellulosic material renders the cellulosic material heat-sealable. The filter material may also be coated with a material which is activated by heat and/or pressure so that it can readily be sealed to ribs formed in the under surface of the top of the package, thereby forming one or more passages which communicate with the outlet.

The beverage preparation ingredients contained in the packages used in the invention are preferably roast and ground coffee, or leaf tea, and according to individual taste, powdered milk or creamer, sugar or artificial sweetner.

It will be understood that it may be convenient for the compartment containing the beverage preparation ingredients to be separated into two or more sections, for example, one section containing roast and ground coffee and another section containing powdered milk or creamer. In such an arrangement the means for the entry of the liquid medium into the separate compartments would be varied to suit the requirements for filtration or dissolution of the particular ingredients.

The package of the present invention, when filled with roast and ground coffee, preferably contains from 2.5 to 10 grams of roast and ground coffee, preferably from 4.5 to 6 grams for the preparation of a single cup. However, packages which are intended to provide multiple servings of coffee will contain an appropriate amount of roast and ground coffee, for example, packages intended to provide say five cups of coffee will contain from 20 to 50 grams of roast and ground coffee, preferably from 25 to 30 grams. The roast and ground coffee is generally compacted when the beverage package is filled in order to aid the distribution and transport of water through the package.

In carrying out the method of the present invention a liquid medium is passed via the inlet of the package into the compartment containing the beverage preparation ingredient(s). The filter is disposed at the top of the compartment containing the beverage preparation ingredient(s) and the liquid medium is thereby caused to flow upwardly through the beverage preparation ingredients. The beverage so formed flows upwardly through the filter into the passage or passages which communicate with the outlet.

Filtering the beverage in an upwardly direction has been found to be advantageous in that the smaller and lighter particles of the beverage preparation ingredients settle to the bottom of the compartment and hence the clogging of the filter by these small particles is mitigated. The beverage thus filters more rapidly upwardly through the filter than it would if the filter were placed beneath the beverage ingredients and the liquid medium caused to flow in a downwardly direction. Furthermore, the flow of water in an upwardly direction through the package is advantageous in that the particles of the beverage preparation ingredient(s) float up towards the filter, thereby re-establishing the filter bed. This is of particular advantage if the particles of the beverage preparation ingredient(s) have settled during transport and/or storage and if holes or cracks have formed in the bed. The upward filtration causes the filter bed to re-estabilish in these situations, thereby providing a more effective filtration of the beverage preparation ingredient(s). With regard to the preparation of a beverage from tea leaves the upward filtration is particularly advantageous because the tea leaves float initially and then sink and the configuration of the beverage packages of the present invention prevents the wetted tea leaves from blinding the filter.

The quality of the filtration of beverage preparation ingredients, in particular roast and ground coffee, is known to affect the flavour of the beverage. The brewing and flavour characteristics for roast and ground coffee charge with the roasting and grinding conditions and are effected by the size and shape of the particles. The beverage packages used in the present invention enable efficient filtration to be achieved and thereby give rise to beverages which have little or no turbidity and a good flavour.

Another advantage of the packages used in the present invention is that with the continuous flow of water in an upwardly direction through the package a more effective wetting of the beverage preparation ingredient(s) is achieved. This is of importance for roast and ground coffee since the wetting of the particles causes the particles to swell and thus assists in preventing fine particles from passing through the filter. It will be appreciated that for the preparation of coffee from roast and ground coffee, or the preparation of tea from leaf tea, the liquid medium is hot water.

The packages used in the present invention are preferably provided with a recognition means whereby, in use, the package is identified by the machine into which it is placed for treatment and the identification of the package thereby causes it to be subjected to the correct treatment steps including the introduction of a liquid medium into the package. For the preparation of beverages from beverage preparation ingredients the liquid medium introduced into the package will generally be water or a water/air mixture.

The recognition means may comprise one or more surface features formed in the body of the beverage package. For example, the package body may be provided with one or more indents, cut outs, protrusions or holes which can be identified by a mechanical sensor in the beverage preparation machine, the mechanical sensor registering the presence or absence of the indents, cut outs, protrusions or holes.

IPR2023-00485
Nespresso USA, Inc. Ex. 1036
Page 3 of 11

The recognition means may, alternatively, comprise a system which can be sensed by a simple optical device, for example a bar code printed onto the body of the package, a pattern of through holes in the package, a pattern of contrasting tones or colours printed onto the package or packages containing different comestibles being of different colours.

The recognition means may also comprise one or more strips of a magnetic material applied to the body of the package which can be read by an appropriate magnetic sensor; one or more shaped or divided areas of metal foil applied to the package body which cause an inductive effect on movement of the package in the machine, which inductive effect can be sensed; or one or more electrically conductive areas formed on the body of the package which can be sensed electrically.

As mentioned above, the package used in the present invention contains one or more beverage preparation ingredients, for example, roast and ground coffee or leaf tea and sugar and/or creamer, as desired. One machine which can readily be adapted for the preparation of a beverage from the preferred beverage package of the invention which includes a recognition means is described in our European Patent Application No. 89302708.6. The only modification required to be made to such a beverage preparation machine is to incorporate an appropriate sensor or sensors into it, the sensor or sensors being designed to read the particular coding on the capsule and to send a signal to the controller, which then selects the appropriate beverage preparation cycle.

The recognition system used on the beverage packages of the present invention enables a single beverage preparation machine to prepare from different beverage packages a great number of different beverages which require different beverage preparation conditions.

The packages used in the present invention may be treated by a machine which includes therein one or more sensors which are adapted to sense and identify a recognition means provided on a package inserted into the machine.

The sensor may be, for example, a mechanical sensor, an optical sensor, a magnetic sensor, an electrical sensor or an inductive sensor. The machine is preferably adapted so that the package is handled automatically following its insertion into the machine. For example, a machine of the type as described in our European Patent Application No. 89302708.6 can be fitted with an appropriate sensor to sense and identify a recognition means provided on beverage packages intended for use therewith.

The present invention will be further described with reference to the accompanying drawings, in which:-

Figure 1 is a perspective view of part of a beverage package of the invention;

Figure 2 is a top plan view of the beverage package of Figure 1;

Figure 3 is a section through the beverage package of Figure 1 along line A-A of Figure 2;

Figure 4 is a section through the beverage package of Figure 1 along line B-B of Figure 2; and

Figure 5 is a section along the line C-C of Figure 2;

Referring to the drawings a beverage package body is shown at 1. The body may be formed, for example, from a moulded plastics material. The body 1 has a compartment 2 in which the beverage preparation ingredient or ingredients are contained. The package body has an outlet nozzle 3 and an inlet 12 formed therein. The compartment 2 is separated from the area of the body in which the nozzle 3 is formed by means of a wall 4. The top 5 of the package 1 has four longitudinal ribs 6 moulded to the underside thereof which are shown as a plurality of dotted lines in Figure 2. The four ribs 6 are joined at either end by transverse ribs 7 which are also shown in dotted outline in Figure 2. The ribs 6 and 7 are strengthened at intervals by posts 8 which are also moulded to the underside of the top 5 of package 1. These posts 8 are also shown in dotted outline in Figure 2. A filter material 9 is heat sealed to ribs 6, ribs 7 and posts 8, the filter material 9 extends across a substantial part of the top of compartment 2.

Compartment 2 is separated from the outlet nozzle by a wall 4 and surrounded on its other three sides by a U-shaped wall 10. The wall 10 has a U-shaped channel 11 surrounding it, the channel 11 communicating with inlet 12. The wall 10 has a plurality of small slots 13 formed in the two longitudinal arms thereof.

In use of the beverage package as shown in the drawings, the bottom of the package 1 is sealed by means of an aluminium foil or a laminated foil which is heat sealed to the lower edges of walls 4 and 10 and to the lower edge 14 of the package. Water enters the package at a pressure of about 10^5Pa via inlet 12 which is opened by piercing or cutting the material covering the said opening. The water enters the channel 11 surrounding three sides of the compartment 2 containing the beverage ingredients. The water, which is under pressure, is forced through the elongate slots 13 formed in the wall 10 which separates channel 11 from compartment 2. The water mixes with the beverage preparation ingredients contained in compartment 2 and is forced upwardly through the beverage preparation ingredients. The beverage formed by passage of the water through the beverage preparation ingredients passes through filter material 9 into passages 15 which are formed between the ribs 6. The sealing of the filter material 9 onto ribs 6 and 7 prevents any short circuit and all of the beverage has to pass through the filter. The passages 15 are closed at the end remote from the outlet by transverse rib 7. The beverage formed

IPR2023-00485
Nespresso USA, Inc. Ex. 1036
Page 4 of 11

by the passage of water through the beverage preparation ingredients also passes directly through the filter material 9 into areas 16 which communicate with passages 15. The beverage passes along passages 15, commingles with the beverage collected in areas 16 and is then funnelled by means of angled extensions 17 of the middle two ribs 6 over a weir 18 to a beverage collection area 19 and thence into outlet nozzle 3. The beverage is then collected in a cup or other receptacle placed below the outlet nozzle 3. It may be desirable to support the filter material 9 by means of additional support ribs in the passages 15 in order to prevent the filter material from bowing and sealing the passages.

Additional strengthening of the package of the invention is provided in the area adjacent the outlet nozzle, as best shown in Figure 4, by a hollow post 20 which is attached by ribs 21 arranged in cruciform fashion to the end wall 22, side wall 27 and wall 4.

Using the beverage package as illustrated in Figures 1 to 5 it is possible to prepare 160 ml of coffee from roast and ground coffee contained in compartment 2 in 20 seconds by passing water at a pressure of 10^5Pa through the package.

The beverage package as illustrated in Figures 1 to 5 incorporates the recognition means which is a preferred feature of the invention. The package of the invention 1 containing one or more beverage preparation ingredients has a generally rectangular shape with flat top and bottom surfaces and is thereby suitable for insertion into a beverage preparation machine, for example of the type as described in our European Patent Application No. 89302708.6, longitudinally through a slot.

The package is also provided, as best shown in Figure 2, with teeth 25 moulded along one side wall of compartment 2. The teeth 25 have recesses 26 formed therebetween. These teeth 25 are intended to enable the beverage package to be driven through a beverage preparation machine by the engagement of the teeth 25 with the tooth of a cam (not shown). The side wall 27 of the beverage package has a flange 28 extending at right angles thereto. The flange 28 has an upstanding rib 30 at the end thereof near to the leading end 29 of the package.

As the package is driven into the beverage preparation machine the flange 28 is sensed as the side edge of the package passes beneath a sensing arm (not shown). The flange 28 has a plurality of upstanding pegs 31,32,33,34 located therein and as the package is driven into the machine by the engagement of the teeth 25 with the tooth of a cam, the sensor senses the presence or absence of upstanding pegs 31,32,33,34.

If one or more of pegs 31,32,33,34 is not present the sensing arm will thereby identify a different type of beverage package. The sensing arm operates a switch (not shown) which thereby transmits information concerning the presence or absence of the pegs on the package to the control mechanism for the beverage dispensing machine. The arrangement of pegs 31,32,33,34 on the package thus identifies the type of package to the controller which then selects the appropriate beverage preparation conditions.

The presence or absence of three pegs provides scope for the sensing arm to sense up to 8 different types of beverage packages. Thus, if the presence of a peg at a particular location is coded as 1 and the absence of a peg coded as 0, the following code combinations can be achieved.

000
001
010
100
101
110
011
111

The presence of the additional fourth peg formed in flange 28 provides an even larger number of code combinations.

When the beverage preparation machine has selected the appropriate beverage preparation conditions, the water inlet 12 of the package is pierced or cut, the outlet 3 is uncovered in the package and water caused to flow under pressure through the compartment containing the beverage ingredient(s). The chosen beverage then being collected in a cup or receptacle placed below the outlet 3 of the package.

It will be appreciated that for different types of packages the beverage or other ingredient may require significantly different treatment. Thus, some beverages will be prepared with hot water and some with cold water, whilst others, such as espresso coffee, will require a smaller amount of water for their preparation. Preparation times may require to be varied. Similarly water and/or air may be required either for preparing/dispensing the beverage/content of the package or for the purpose of pre-cleaning an inlet pipe or flushing out a used package. Furthermore, a user may require a particular beverage to be dispensed in combination with one or more ingredients from independent sources, e.g. powdered milk and/or sugar.

The present invention will be further illustrated with reference to the following non-limiting Example.

EXAMPLE

The following experiments were conducted in respect of the preparation of beverages from coffee capsules, adapted for upward or downward filtration, which had been subject to vibration during transport and distribution. The capsules were each tapped prior to the preparation of the beverages.

IPR2023-00485
Nespresso USA, Inc. Ex. 1036
Page 5 of 11

Downward Filtration

Sample 1

6.3g of roast and ground coffee contained in a capsule adapted for downward filtration gave 153cc of a coffee beverage at 0.8% solids with a yield of 19.4%.

Sample 2

6.3g of roast and ground coffee contained in a capsule adapted for downward fitration gave 153cc of a coffee beverage at 0.81% solids with a yield of 19.7%.

Upward Filtration

Sample 3

6.3g of roast and ground coffee contained in a capsule adapted for upward filtration, when brewed in the same manner as for samples 1 and 2, gave 156cc of a coffee beverage at 1.04% solids with a yield of 25.7%.

Sample 4

6.3g of roast and ground coffee contained in a capsule adpated for upward filtration, when brewed in the same manner as for samples 1 and 2, gave 158cc of a coffee beverage at 1.02% solids with a yield of 25.6%.

These results indicate an improvement of approximately 20% yield.

Claims

1. A method for the preparation of a beverage from a sealed package (1) containing one or more beverage preparation ingredients located in a compartment (2) in the package (1), which method comprises introducing a liquid medium suitable for the preparation of the beverage under pressure into the package (1) through an inlet (12) formed therein, causing the liquid medium to enter the compartment (2) thereby forming the beverage, and collecting the beverage so formed from an outlet (3) formed in the package, characterised in that the beverage is filtered in an upwardly direction through a filter (9).

2. A method as claimed in claim 1 wherein the inlet (12) and/or outlet (3) in the package (1) is/are formed by means of a piercing and cutting tool.

3. A method as claimed in claim 1 or claim 2 wherein the liquid medium is water.

4. A method as claimed in any one of the preceding claims wherein the flow of the liquid medium into the compartment (2) containing the beverage preparation ingredients is achieved by causing the liquid to flow through one or more restricted openings (13) into the said compartment (2).

5. A method as claimed in claim 4 wherein the restricted openings (13) are elongate slots.

6. A method as claimed in any one of the preceding claims wherein the inlet (12) and/or outlet (3) is covered by a substantially air- and water-impermeable material prior to the formation of the inlet (12) and/or outlet (3) in the package.

7. A method as claimed in any one of claims 1 to 5 wherein the inlet (12) and/or outlet (3) is closed by a plug prior to the formation of the inlet (12) and/or outlet (3) in the package (1).

8. A method as claimed in any one of the preceding claims wherein the filter (9) is made from a water-permeable material.

9. A method as claimed in any one of the preceding claims wherein a plurality of passages (15) are formed between the filter (9) and the top (5) of the package (1).

10. A method as claimed in any one of the preceding claims wherein the beverage preparation ingredient is leaf tea or roast and ground coffee.

Patentansprüche

1. Verfahren für die Zubereitung eines Getränks aus einem abgedichteten Behälter (1), welcher eine oder mehrere in einem Fach (2) in dem Behälter (1) angeordnete Zutaten für die Getränkezubereitung enthält, welches Verfahren das Einführen einer für die Zubereitung des Getränks geeigneten Flüssigkeit unter Druck in den Behälter (1) durch einen darin ausgebildeten Einlaß (12) umfaßt, wodurch bewirkt wird, daß die Flüssigkeit in das Fach (2) gelangt, wodurch das Getränk gebildet wird, und Sammeln des derart gebildeten Getränks von einem in dem Behälter ausgebildeten Auslaß (3), dadurch gekennzeichnet, daß das Getränkt durch einen Filter (9) in einer Aufwärtsrichtung gefiltert wird.

2. Verfahren nach Anspruch 1, bei welchem der Einlaß (12) und/oder der Auslaß (3) in dem Behälter (1) mittels eines Stanz- und Schneidewerkzeugs

IPR2023-00485
Nespresso USA, Inc. Ex. 1036
Page 6 of 11

ausgebildet ist/sind.

3. Verfahren nach Anspruch 1 oder Anspruch 2, bei welchem die Flüssigkeit Wasser ist.

4. Verfahren nach einem der vorhergehenden Ansprüche, bei welchem das Strömen der Flüssigkeit in das die Zutaten für die Getränkezubereitung enthaltende Fach (2) dadurch bewirkt wird, daß die Flüssigkeit dazu gebracht wird, durch eine oder mehrere beschränkte Öffnungen (13) in das Fach (2) zu strömen.

5. Verfahren nach Anspruch 4, bei welchem die beschränkten Öffnungen (13) längliche Schlitze sind.

6. Verfahren nach einem der vorhergehenden Ansprüche, bei welchem der Einlaß (12) und/oder der Auslaß (3) vor der Ausbildung des Einlasses (12) und/oder des Auslasses (3) in dem Behälter von einem im wesentlichen luft- und wasserundurchlässigen Material bedeckt ist/sind.

7. Verfahren nach einem der Ansprüche 1 bis 5, bei welchem der Einlaß (12) und/oder der Auslaß (3) vor der Ausbildung des Einlasses (12) und/oder des Auslasses (3) in dem Behälter (1) von einem Stopfen verschlossen ist/sind.

8. Verfahren nach einem der vorhergehenden Ansprüche, bei welchem der Filter (9) aus einem wasserdurchlässigen Material gefertigt ist.

9. Verfahren nach einem der vorhergehenden Ansprüche, bei welchem eine Mehrzahl von Kanälen (15) zwischen dem Filter (9) und der Oberseite (5) des Behälters (1) ausgebildet ist.

10. Verfahren nach einem der vorhergehenden Ansprüche, bei welchem die Zutat für die Getränkezubereitung Blattee oder gerösteter und gemahlener Kaffee ist.

Revendications

1. Procédé pour la préparation d'une boisson à partir d'un emballage étanche (1) contenant un ou plusieurs ingrédients de préparation de boisson placés dans un compartiment (2) dans l'emballage (1), lequel procédé consiste à introduire un milieu liquide convenant à la préparation de la boisson sous pression dans l'emballage (1) à travers une entrée (2) formée dans celui-ci, à amener le milieu liquide à entrer dans le compartiment (2), formant ainsi la boisson, et à collecter la boisson ainsi formée à partir d'une sortie (3) formée dans l'emballage, caractérisé en ce que la boisson est filtrée en s'élevant à travers un filtre (9).

2. Procédé selon la revendication 1, dans lequel l'entrée (12) et/ou la sortie (3) de l'emballage (1) est/sont formées au moyen d'un outil de perçage et de coupe.

3. Procédé selon la revendication 1 ou la revendication 2, dans lequel le milieu liquide est de l'eau.

4. Procédé selon l'une quelconque des revendications précédentes, dans lequel l'écoulement du milieu liquide jusque dans le compartiment (2) contenant les ingrédients de préparation de boisson est réalisé en amenant le liquide à s'écouler à travers une ou plusieurs ouvertures étranglées (13) jusque dans ledit compartiment (2).

5. Procédé selon la revendication 4, dans lequel les ouvertures étranglées (13) sont des fentes allongées.

6. Procédé selon l'une quelconque des revendications précédentes, dans lequel l'entrée (12) et/ou la sortie (13) sont recouvertes d'une matière sensiblement imperméable à l'air et à l'eau avant la formation de l'entrée (12) et/ou de la sortie (3) dans l'emballage.

7. Procédé selon l'une quelconque des revendications 1 à 5, dans lequel l'entrée (12) et/ou la sortie (3) sont fermées par un bouchon avant la formation de l'entrée (12) et/ou de la sortie (3) dans l'emballage (1)

8. Procédé selon l'une quelconque des revendications précédentes, dans lequel le filtre (9) est réalisé en une matière perméable à l'eau.

9. Procédé selon l'une quelconque des revendications précédentes, dans lequel plusieurs passages (15) sont formés entre le filtre (9) et le dessus (5) de l'emballage (1).

10. Procédé selon l'une quelconque des revendications précédentes, dans lequel l'ingrédient de préparation de la boisson est du thé en feuilles ou du café torréfié et moulu.

IPR2023-00485
Nespresso USA, Inc. Ex. 1036
Page 7 of 11

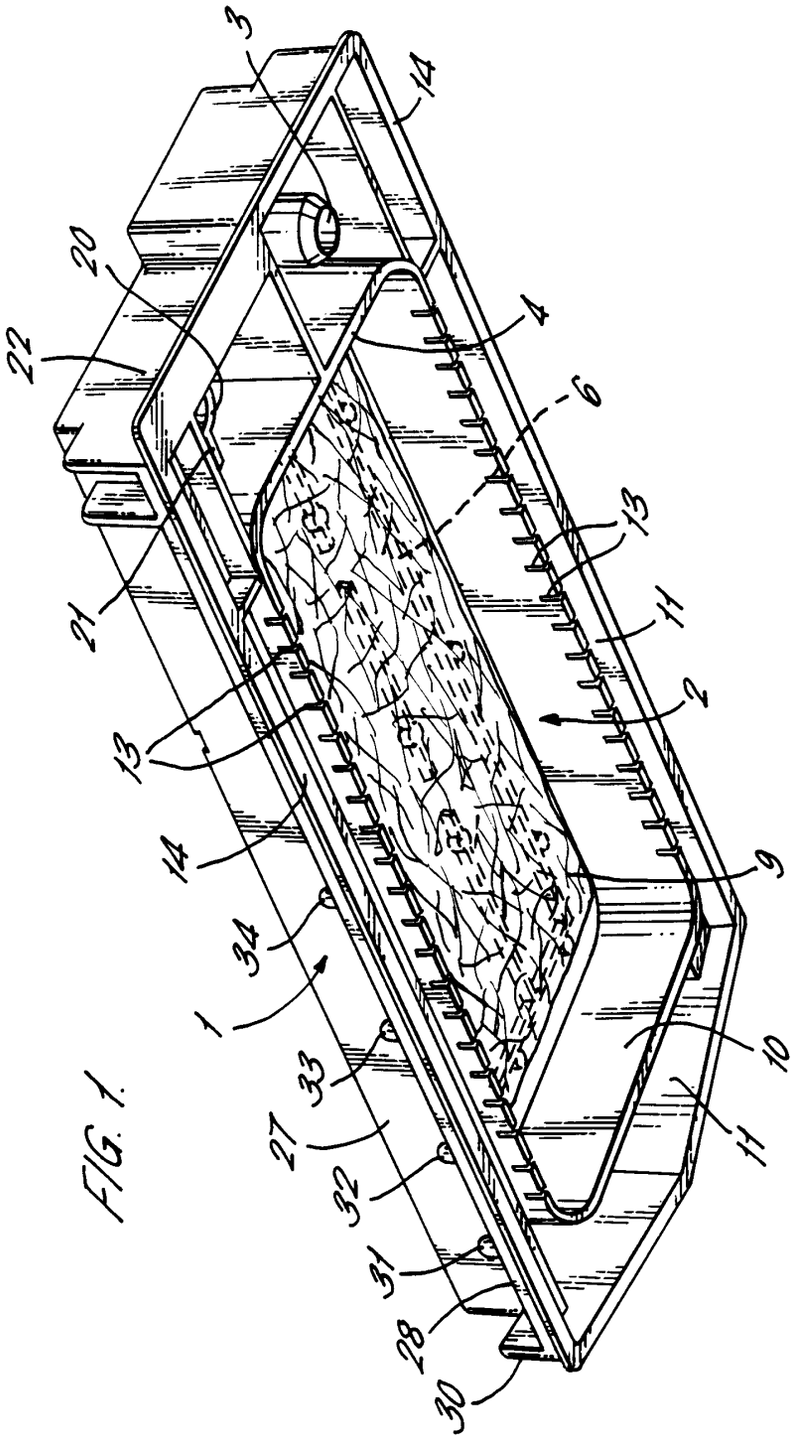

FIG. 1.

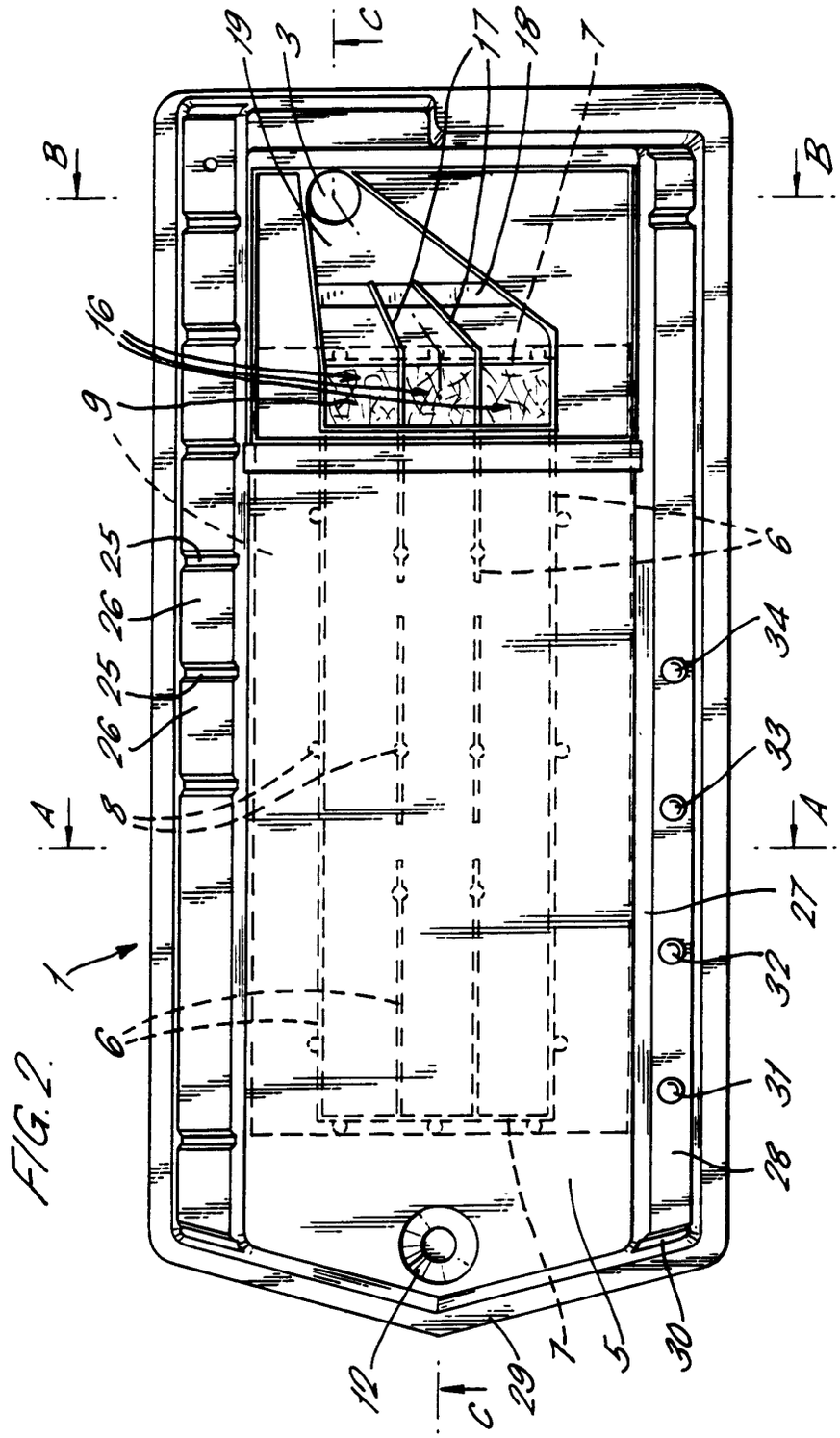

FIG. 2.

FIG. 3.

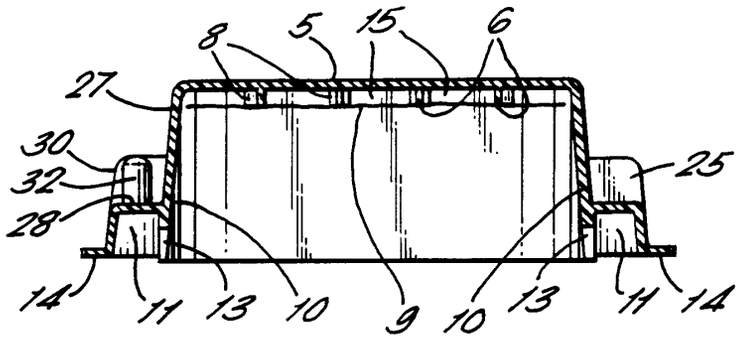

FIG. 4.

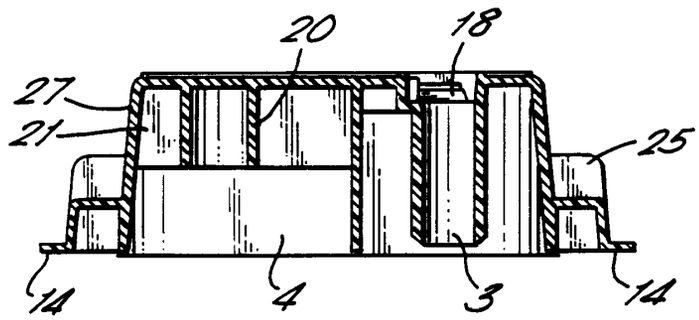

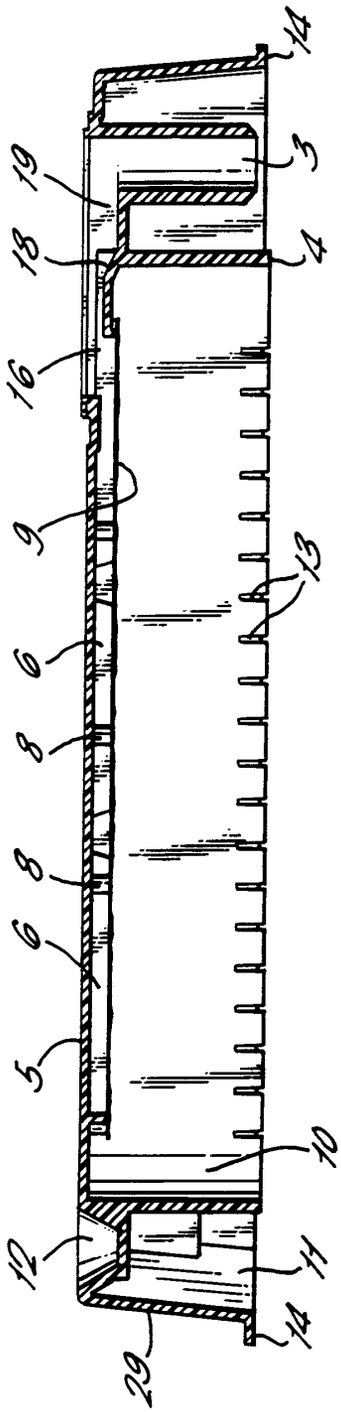

FIG. 5.