US 20020048621A1

(19) United States

(12) Patent Application Publication (10) Pub. No.: US 2002/0048621 A1

Boyd et al. (43) Pub. Date: Apr. 25, 2002

(54) ENCODED COFFEE PACKET

(76) Inventors: **David D. Boyd**, Portland, OR (US); **Michael W. Johnson**, Portland, OR (US)

Correspondence Address:
KOLISCH HARTWELL DICKINSON MCCORMACK & HEUSER
520 S.W. YAMHILL STREET
SUITE 200
PORTLAND, OR 97204 (US)

(21) Appl. No.: **09/972,790**

(22) Filed: **Oct. 5, 2001**

Related U.S. Application Data

(63) Non-provisional of provisional application No. 60/238,802, filed on Oct. 6, 2000.

Publication Classification

(51) **Int. Cl.**[7] **B65B 55/00**; B65B 29/02

(52) **U.S. Cl.** **426/77**; 426/84; 426/232

(57) **ABSTRACT**

A brewing packet is provided for use in the preparation of hot or cold beverages. The brewing packet envelops a brewing ingredient chosen according to the tastes of a beverage drinker. The packet includes a machine interpretable feature that contains encoded data capable of being read by a beverage producing device. Furthermore, the data on the packet is capable of directing the beverage producing device to employ a specific brewing operation suited for the particular brewing packet. This allows for producing the optimal beverage from the brewing ingredient. The packet may be utilized with a variety of brewing ingredients to produce a variety of beverages. Similarly, the packet may be configured to produce single or multiple servings of a beverage.

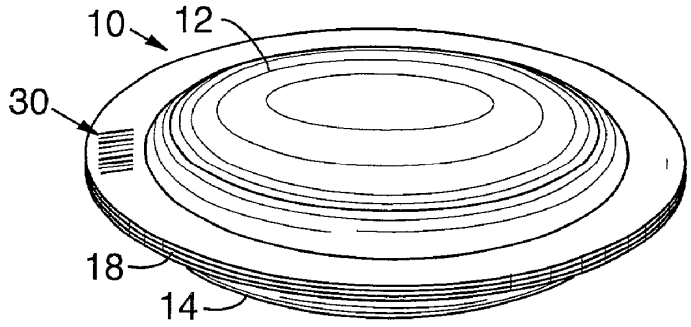

FIG. 1

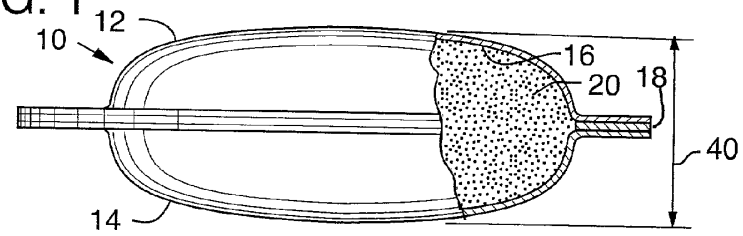

FIG. 2

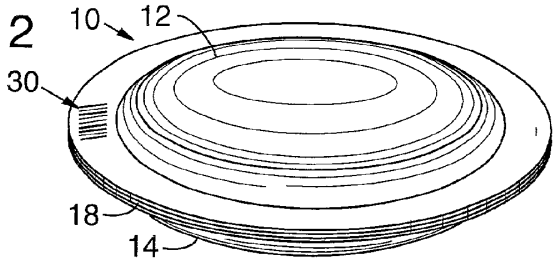

FIG. 2a

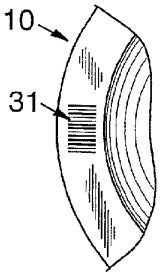

FIG. 2b

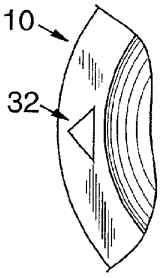

FIG. 2c

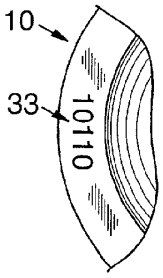

FIG. 2d

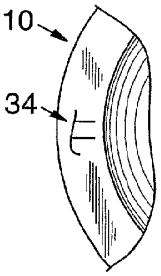

FIG. 2e

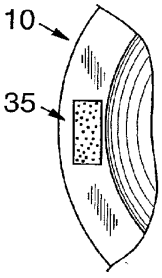

FIG. 2f

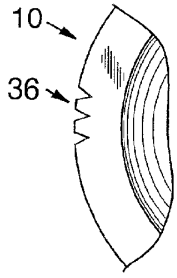

FIG. 2g

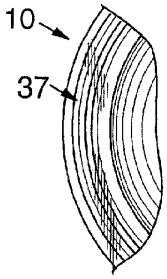

FIG. 2h

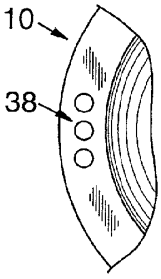

FIG.3

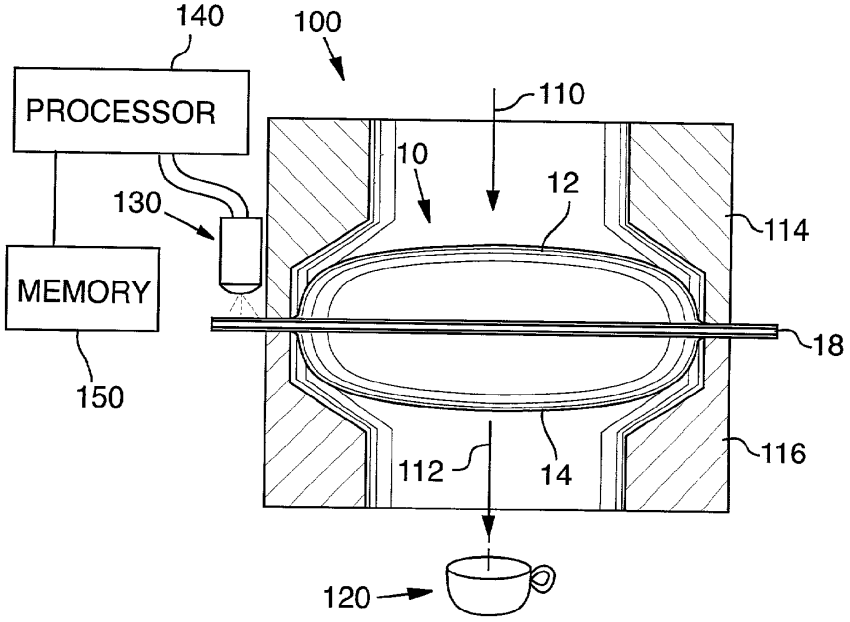
140
100
PROCESSOR
110
10
12
130
114
MEMORY
18
150
116
112
14
120

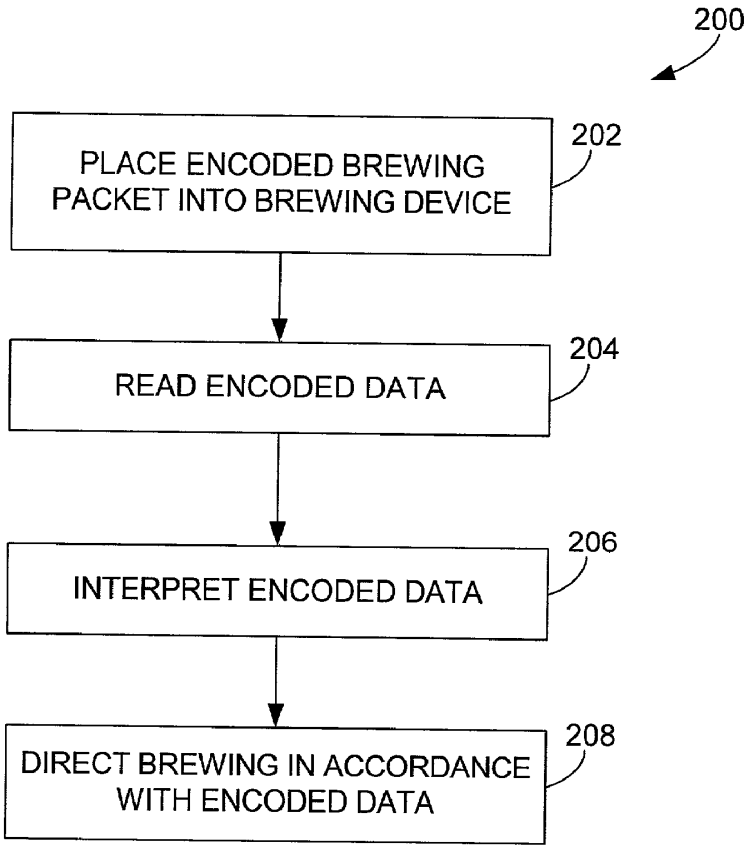
200
PLACE ENCODED BREWING PACKET INTO BREWING DEVICE
202
READ ENCODED DATA
204
INTERPRET ENCODED DATA
206
DIRECT BREWING IN ACCORDANCE WITH ENCODED DATA
208

FIG. 4

ENCODED COFFEE PACKET

CROSS REFERENCE TO RELATED APPLICATION

[0001] This application claims priority from Provisional Patent Application Serial No. 60/238,802, filed Oct. 6, 2000 for ENCODED COFFEE PACKET. The full contents of that provisional patent application are incorporated by reference.

FIELD OF THE INVENTION

[0002] The present invention relates generally to coffee machines, and more particularly, to an encoded coffee packet for use in a coffee machine to direct the coffee brewing process.

BACKGROUND OF THE INVENTION

[0003] Automated coffee machines have long been used for brewing coffee, both in large-scale commercial settings and in smaller business and home settings. These machines typically operate on the principle of placing a quantity of ground coffee into a filter, and passing hot water through the ground coffee to produce a coffee beverage.

[0004] In recent years, such machines have brewed coffee using pre-measured, pre-packaged quantities of ground coffee, typically in the form of packets which may be inserted into the coffee machine at the time of brewing, or selected from an onboard coffee packet supply. These packets, also known as pods or cartridges, simplify the task of cleaning the machine and replacing used coffee grounds, and ensure more consistent coffee quality and taste.

[0005] Despite these advantages, however, coffee machines which employ such pre-measured coffee packets typically do not consider variations in individual taste, or the particular characteristics of the packaged coffee grounds. The use of such packets also has heretofore been reserved for espresso coffee making machines, which typically employ consistent size, shape and grind characteristics. Accordingly, applicants have developed a system whereby coffee packets may be encoded with data for use in directing the coffee brewing process to accommodate individual tastes and the particular characteristics of the ground coffee used.

SUMMARY OF THE INVENTION

[0006] A brewing packet is provided for use in the preparation of hot or cold beverages. The brewing packet envelops a brewing ingredient chosen according to the tastes of a beverage drinker. The packet includes a machine interpretable feature that contains encoded data capable of being read by a beverage producing device. Furthermore, the data on the packet may be capable of directing the beverage producing device to employ a specific brewing operation suited for the particular brewing packet. This allows for producing the optimal beverage from the brewing ingredient. The packet may be utilized with a variety of brewing ingredients to produce a variety of beverages. Similarly, the packet may be configured to produce single or multiple servings of a beverage.

BRIEF DESCRIPTION OF THE DRAWINGS

[0007] **FIG. 1** is a side view of a packet according to an embodiment of the present invention with a section cut away to reveal the contents of the packet.

[0008] **FIG. 2** is an isometric view of the packet depicted in **FIG. 1**.

[0009] **FIG. 2***a* is a fragmentary view of the packet shown in **FIGS. 1 and 2**, illustrating an optical bar code encoding configuration.

[0010] **FIG. 2***b* is a fragmentary view of an alternative embodiment packet, illustrating encoded data in the form of a shape.

[0011] **FIG. 2***c* is a fragmentary view of an alternative embodiment packet, illustrating encoded data in the form of a text string.

[0012] **FIG. 2***d* is a fragmentary view of an alternative embodiment packet, illustrating encoded data in the form of a glyph.

[0013] **FIG. 2***e* is a fragmentary view of an alternative embodiment packet, illustrating encoded data in the form of a digital watermark.

[0014] **FIG. 2***f* is a fragmentary view of an alternative embodiment packet, illustrating encoded data in the form of notches.

[0015] **FIG. 2***g* is a fragmentary view of an alternative embodiment packet, illustrating encoded data in the form of grooves.

[0016] **FIG. 2***h* is a fragmentary view of an alternative embodiment packet, illustrating encoded data in the form of holes.

[0017] **FIG. 3** is a schematic representation of a coffee machine constructed in accordance with an embodiment of the present invention, the coffee machine being configured to receive and decipher an encoded packet.

[0018] **FIG. 4** is a flowchart of a method according to the present invention.

DETAILED DESCRIPTION OF THE INVENTION

[0019] Although the present invention may be used in virtually any brewing machine, it is described herein for use in the context of machines such as those disclosed in U.S. Pat. No. 5,974,949 to Weber et al. and U.S. Pat. No. 6,035,762 to Ruckstuhl. Those patents disclose machines for brewing espresso using espresso espresso packets in the form of filter capsules which are received through a funnel into a brewing chamber where water is passed through the filter capsule to produce an espresso beverage. The subject matter of each of these patents is incorporated herein by this reference.

[0020] The invention also may be practiced in connection with espresso machines such as those disclosed in U.S. Pat. Nos. 4,253,385, 4,254,694, 4,353,293, 4,429,623, 4,484,515, 4,555,894 and 4,852,333, all to Illy. These patents disclose various aspects of espresso machines which include brewing chambers configured to receive pre-fabricated espresso packets through which water is passed to produce an espresso drink. The subject matter of each of these patents also is incorporated herein by this reference.

[0021] While the aforementioned machines generally are described for use in connection with espresso packets which contain a single serving of espresso, it will be appreciated

that the present invention considers application of the relevant principles to machines which employ coffee packets for use in brewing multiple cups, which employ coffee packets of various size and shape, which employ various filter media and which contain coffee of various varieties, roasts, and grinds. Furthermore, the packet and methodology described herein may also produce other types of beverages such as tea, cider, and/or any beverage which is produced by mixing various ingredients. The packet and methodology is not limited to hot beverages and may be used to produce cold beverages.

[**0022**] As indicated above, a variety of factors beyond the grind of the coffee play a part in the taste of coffee, including factors such as freshness, brew temperature, brew duration, amount of water used, etc. These factors may be dependent on the characteristics of the coffee itself, or may be determined by the tastes of the coffee drinker, even absent an understanding of the effects of changes in the brew operation.

[**0023**] With the foregoing in mind, it will be appreciated that it would be desirable to automatically customize the brew operation based on particular characteristics of the packet, the characteristics of the coffee, and/or the tastes of the user, whether or not the user is aware of what changes in the brew operation will lead to the desired taste. The present invention provides a vehicle for such customization in the form of an encoded packet configured to provide the brewing machine with data useful in directing the brewing operation in accordance with packet or packet content characteristics and/or the user's tastes.

[**0024**] Focusing now particularly on the invented encoded coffee packet, it will be appreciated that such packet typically takes the form of a coffee-filled packet configured for placement in a fluid path of a coffee machine whereby hot water (or steam) flows through the packet to produce a coffee beverage. An exemplary packet is depicted in FIGS. **1-3**, such packet being indicated generally at 10.

[**0025**] In accordance with the present invention, packet **10** is of somewhat conventional construction, including a filter with a first filter portion **12** and a second filter portion **14** which collectively define a cavity **16** containing ground coffee **20**. The filter is selected to permit flow of water therethrough, but to restrict flow of the ground coffee therethrough, other than in the form of a coffee beverage.

[**0026**] Typically, the filter takes the form of opposing, water-permeable paper sheets, as indicated, but the filter may be formed of stainless steel, or some other filter material configured to define a cavity for containment of coffee grounds while water and brewed coffee beverage pass therethrough. It is desirable, however, that the filter impart no undesirable taste characteristics to the resulting coffee beverage.

[**0027**] As indicated above, opposing filter portions **12** and **14** are secured together about their respective perimeters to form cavity **16**. In the depicted embodiment, the filter portions are secured to an orbicular gasket **18**. The gasket is deformable to allow for an optimum seal. In an alternative embodiment, the packet may be integrally formed from a continuous filter in which no gasket is required. Although the depicted packet is circular, it will be appreciated that the cavity may take virtually any shape capable of containing coffee grounds. The size and bed depth **40** of the packet is determined by the quantity of coffee grounds, the density of coffee grounds, and the desired coffee beverage taste.

[**0028**] As shown in **FIG. 2**, packet **10** includes a machine interpretable feature **30** which directs operation of the coffee machine in accordance with predefined brewing directives. In the first depicted embodiment, the machine interpretable feature is a barcode **31** as depicted in **FIG. 2** and **2***a*. It will be understood that the machine interpretable feature may be any machine readable feature associated with packet **10**.

[**0029**] Examples of alternative embodiments are depicted in **FIGS. 2***b* through **2***h*. In **FIG. 2***b* the feature is geometric shape **32**. The shape may be raised or lowered and may, or may not incorporate color, or some other machine-interpretably characteristic. **FIG. 2***c* shows text string **33**. The text string may consist of alpha-numeric characters and may be of various lengths including a single character. **FIG. 2***d* shows glyph **34**. The glyph may be any symbolic figure including a symbol used as a trademark. A digital watermark **35** is depicted in **FIG. 2***e*. **FIG. 2***f* shows notches **36**. The notches may be localized to a particular area of the packet or may span its entire perimeter in singular or repetitive fashion. Grooves **37** are depicted in **FIG. 2***g*. One or more grooves may be incorporated to create a texture. **FIG. 2***h* shows holes. One or more holes may be used, which holes may be, of various shapes and sizes. The above-noted machine interpretable features; or other machine interpretable features, may similarly may be employed in combination or alone, such features being selected for their ability to store brewing directives and packet and/or ingredient-characteristic data, and for their cost of manufacture, aesthetic appearance, and ability to carry machine interpretal features which are capable of being successfully detected, read, and interpreted.

[**0030**] Machine interpretable feature **30**, it will be appreciated, is capable of storing a significant amount of data, including specific brewing directives and/or packaging or ingredient characteristics. Examples of the types of brewing directives stored in machine interpretable feature **30** may include, for example, contact time, contact pattern, fluid volume, fluid temperature, fluid pressure, and/or fluid pass-through rate. The above brewing directives are all well known in the coffee brewing industry to affect the taste and quality of the coffee beverage. Examples of ingredient characteristics which may be stored in machine interpretable feature **30** include grind, blend, roast, quantity, bed depth, freshness, and expiration date. These examples are meant to be exemplary, not limiting in scope.

[**0031**] **FIG. 3** schematically depicts a coffee machine **100** designed to utilize packet **10**. In the depicted embodiment, packet **10** is positioned between input fluid path **110** and output fluid path **112**. Gasket **18** helps form a seal between chamber **114**, defining the input fluid path, and chamber **116**, defining the output fluid path. Gasket **18** also helps secure packet **10** in place. In other embodiments, packet **10** is held in place by gravity, water pressure, friction, adhesion, magnetism, or other suitable mechanisms. As depicted, water passes into packet **10** along input fluid path **110**, passing through filter portion **12**. The water contacts ground coffee within packet **10**, producing a coffee beverage. The coffee beverage then flows through packet **10** and out through filter portion **14**. Thereafter, the coffee beverage continues along

output fluid path **112** and into beverage receptacle **120**. In one embodiment, water is stored in a reservoir (not shown) within coffee machine **100** and heated before entering input fluid path **110**. Alternatively, water is externally heated before entering input fluid path **110**, or not heated at all. Beverage receptacle **120** may be dimensioned to accommodate multiple servings of the brewed coffee beverage, or may be dimensioned to receive a single serving of brewed coffee.

[**0032**] Coffee machine **100** includes a sensor **130** designed to read machine interpretable feature **30** of packet **10**. Sensor **130** is in turn operatively connected to a processor **140** which controls coffee machine **100**. Machine interpretable feature **30** may store data which is read by sensor **130** and passed to processor **140**. Processor **140** may then direct the brewing operation in accordance with its interpretation of the data derived from machine interpretable feature **30**. For example, processor **140** may direct coffee machine **100** to brew using a pre-selected contact time, contact pattern, fluid quantity, fluid temperature, fluid pressure, and/or fluid pass-through rate expressed in machine interpretable feature **30**. Alternatively, the processor may itself make determinations of contact time, contact pattern, fluid quantity, fluid temperature, fluid pressure, and/or fluid pass-through rate based on information contained in machine interpretable feature **30**. The processor may also, based on information contained in machine interpretable feature **30**, direct the coffee machine to add water, milk, cream, sugar, or any suitable condiment to the coffee beverage.

[**0033**] As alluded to above, machine interpretable feature **30** need not store data specifically including brewing directives and ingredient characteristics. Instead machine interpretable feature **30** may act as an identifier so that brewing directives and ingredient characteristics may be looked up from data storage **150** within (or external to) coffee machine **100**. Sensor **130** thus may read machine interpretable feature **30** and processor **140** may match the machine interpretable feature with predefined brewing operation instructions stored in such memory. Processor **140** may then direct the brewing operation based on brewing operation instructions. In one embodiment, the brewing operation instructions are matched to a machine interpretable feature using a look-up table in which brewing operation instructions correspond in a one-to-one ratio with each known ingredient variety, packet size, packet construction, user preference, etc. It will be appreciated, however, that other arrangements for matching machine interpretable feature **30** with brewing directives similarly may be used.

[**0034**] Referring now to **FIG. 4, a** method of operation for the present invention is illustrated at **200**. At **202**, a brewing packet encoded with packet-characteristic data is placed into a brewing device. At **204**, the packet-characteristic data is read by a sensor. At **206**, the packet-characteristic data is interpreted by a processor. Finally, at **208**, brewing is directed in accordance with the packet-characteristic data read by the sensor and interpreted by the processor.

[**0035**] Because the processor may be employed to effect the aforementioned predefined brewing directives based on the machine interpretable feature associated with each packet. The brewing operation may be made consistent based on consistent machine interpretable features from packet to packet. Similarly, the brewing operation may be altered in accordance with desired brewing characteristics each time the packet is replaced. Particular brew characteristics thus may be controlled simply by selection of a packet with the desired encoded brewing directives (whether or not such directives are known to the coffee machine operator). Control of the brewing process thus may be handed off to the brewing professionals who produce the packets, rather than relying on untrained machine operators. This may be done without sacrificing variety in brew operation based on differing characteristics of the packet contents or consumer tastes.

[**0036**] For example, a person desiring weaker coffee may purchase packets designated such in order to direct the machine to add water to the brewed coffee beverage in accordance with proper brewing procedure. This avoids problems associated with ill-advised attempts to dilute coffee by decreasing the quantity of coffee used, a change which may result in a corresponding change in bed depth, and thus in an undesirable change in coffee taste.

[**0037**] The encoded packets also may be used to track brewing information which may be useful in ensuring satisfaction with the brewed coffee beverage. For example, the packet may include an encoded date for use in tracking freshness of the coffee grounds contained within the packet. Upon determining that the packet is stale, the processor may direct the machine to note such staleness, thus avoiding an unsatisfactory beverage. Similarly, the packet may contain encoded data related to the coffee blend contained within the packet, such data being stored in memory to provide a history of coffee blends. The encoded packet also may contain encoded data defining the source of the packet so as to prohibit use of counterfeit packets, or packets from unauthorized suppliers.

[**0038**] While the invention has been disclosed in its preferred form, the specific embodiments thereof as disclosed and illustrated herein are not to be considered in a limiting sense as numerous variations are possible. The subject matter of the invention is regarded to include all novel and non-obvious combinations and subcombinations of the various elements, features, functions and/or properties disclosed herein. No single feature, function, element or property of the disclosed embodiments is essential. The following claims define certain combinations and subcombinations which are regarded as novel and non-obvious. Other combinations and subcombinations of features, functions, elements and/or properties may be claimed through amendment of the present claims or presentation of new claims in this or a related application. Such claims are also regarded as included within the subject matter of applicant's invention irrespective of whether they are broader, narrower, or equal in scope to the original claims.

We claim:

1. A brewing packet comprising:

a filter defining a cavity;

a brewing ingredient within the cavity; and

a machine-interpretable feature associated with the filter, wherein the feature includes encoded data regarding the brewing packet.

2. The packet of claim 1, wherein the machine-interpretable feature is located on the filter.

3. The packet of claim 1, wherein the filter defines an annular flange, the machine-interpretable feature being located on the annular flange.

4. The packet of claim 1, wherein the filter includes a first filter portion, a second filter portion, and a gasket which seals the first filter portion to the second filter portion.

5. The packet of claim 1, wherein the machine-interpretable feature is optically detectable.

6. The packet of claim 5, wherein the machine-interpretable feature includes one or more of a color, a shape, a glyph, a text string, a barcode, and a digital watermark.

7. The packet of claim 1, wherein the machine-interpretable feature is electromagnetically detectable.

8. The packet of claim 7, wherein the machine-interpretable feature includes a magnetic data storage medium.

9. The packet of claim 1, wherein the machine-interpretable feature is mechanically detectable.

10. The packet of claim 9, wherein the machine-interpretable feature includes one or more of notches, grooves, holes, bumps, and textures.

11. The packet of claim 1, wherein the encoded data includes at least one predefined brewing directive.

12. The packet of claim 11, wherein the predefined brewing directive is one or more of contact time, contact pattern, fluid quantity, fluid temperature, fluid pressure, or fluid pass-through rate.

13. The packet of claim 1, wherein the encoded data defines at least one characteristic of the brewing ingredient.

14. The packet of claim 13, wherein the characteristic is one or more of grind, blend, roast, quantity, bed depth, freshness, and expiration date.

15. A beverage producing device comprising:

a fluid path configured to direct fluid through an ingredient enveloping beverage packet into a beverage receptacle;

a sensor configured to detect encoded data stored on the beverage packet; and

a processor configured to interpret the encoded data and to direct production of a beverage according to the encoded data.

16. A method of automatically directing beverage-brewing comprising:

placing a brewing packet encoded with packet-characteristic data into a beverage-brewing device;

reading the packet-characteristic data;

interpreting the packet-characteristic data; and

directing beverage-brewing in accordance with interpreted packet-characteristic data.

17. The method of claim 16, wherein reading the packet-characteristic data includes detecting an optically recognizable feature containing the data.

18. The method of claim 16, wherein reading the packet-characteristic data includes detecting an electromagnetically recognizable feature containing the data.

19. The method of claim 16, wherein reading the packet-characteristic data includes detecting a mechanically recognizable feature containing the data.

20. The method of claim 16, wherein directing beverage-brewing includes setting at least one predefined brewing directive.

21. The method of claim 16, wherein directing beverage-brewing selectively includes aborting the brewing process.

22. A multiple beverage coffee-brewing packet comprising:

a first substantially rounded filter portion;

a second substantially rounded filter portion operatively connected to the first substantially rounded filter portion by an orbicular gasket to collectively define a cavity, the first and second substantially rounded filter portions being at least partially constructed of water-permeable material; and

a coffee-brewing ingredient within the cavity, wherein the coffee-brewing ingredient is proportioned to produce multiple servings of drip coffee.

23. The coffee-brewing packet of claim 22, wherein a coffee-brewing operation is directed by a machine interpretable feature associated with the coffee-brewing packet.

24. The coffee-brewing packet of claim 23, wherein the machine interpretable feature is the dimension of the orbicular gasket.

25. The coffee-brewing packet of claim 23, wherein the machine interpretable feature is a barcode located on the coffee-brewing packet.

* * * * *