US 20090205747A1

(19) United States

(12) Patent Application Publication

Lillard, JR.

(10) Pub. No.: US 2009/0205747 A1

(43) Pub. Date: Aug. 20, 2009

(54) BEVERAGE IDENTIFICATION SYSTEM AND METHOD

(75) Inventor: **Donald W. Lillard, JR.**, Lake Zurich, IL (US)

Correspondence Address:
Husch Blackwell Sanders, LLP
Husch Blackwell Sanders LLP Welsh & Katz
120 S RIVERSIDE PLAZA, 22ND FLOOR
CHICAGO, IL 60606 (US)

(73) Assignee: **Insight Beverages, Inc.**, Lake Zurich, IL (US)

(21) Appl. No.: **12/370,782**

(22) Filed: **Feb. 13, 2009**

Related U.S. Application Data

(60) Provisional application No. 61/028,579, filed on Feb. 14, 2008.

Publication Classification

(51) **Int. Cl.**
B65B 31/00 (2006.01)

(52) **U.S. Cl.** **141/94**

(57) **ABSTRACT**

A system and method for dispensing a beverage are provided. The system includes a liquid dispensing machine having a dispensing area capable of receiving a container, a scanner adjacent to the dispensing area, a container that is capable of being placed in the dispensing area, and annular barcode indicia extending around an exterior surface of the container and centered around a generally vertical axis of the container. The scanner can read the annular barcode indicia when the container is placed in the dispensing area at any rotational orientation relative to the scanner.

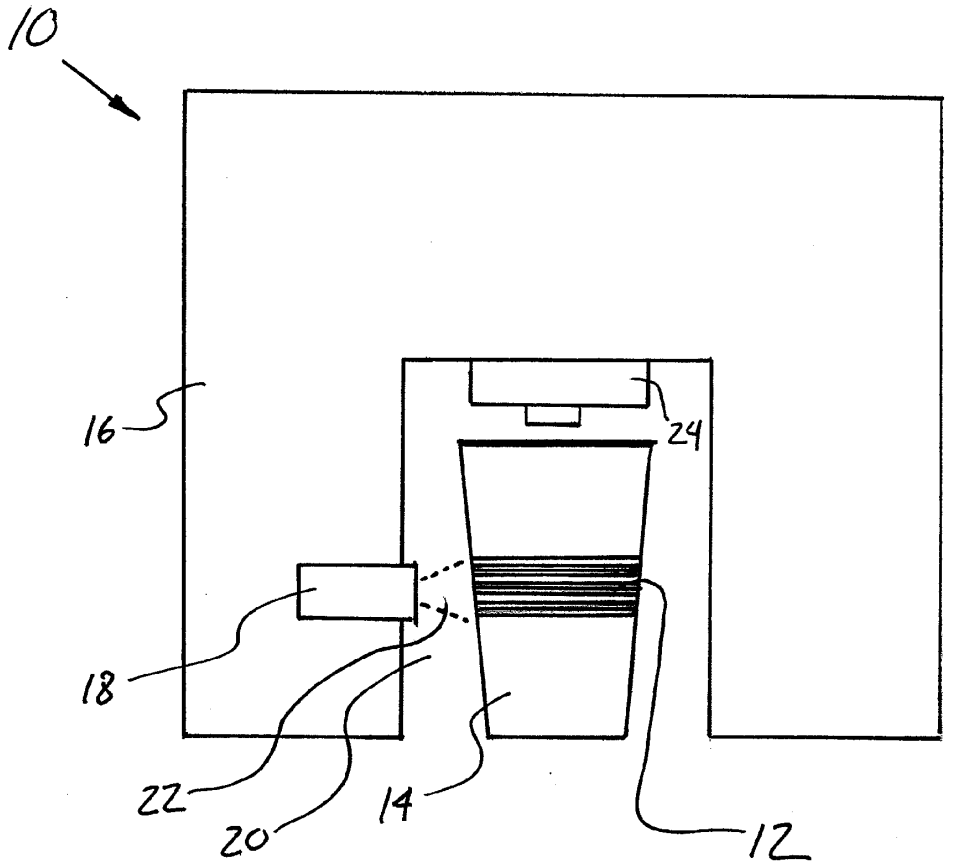

FIG. 1

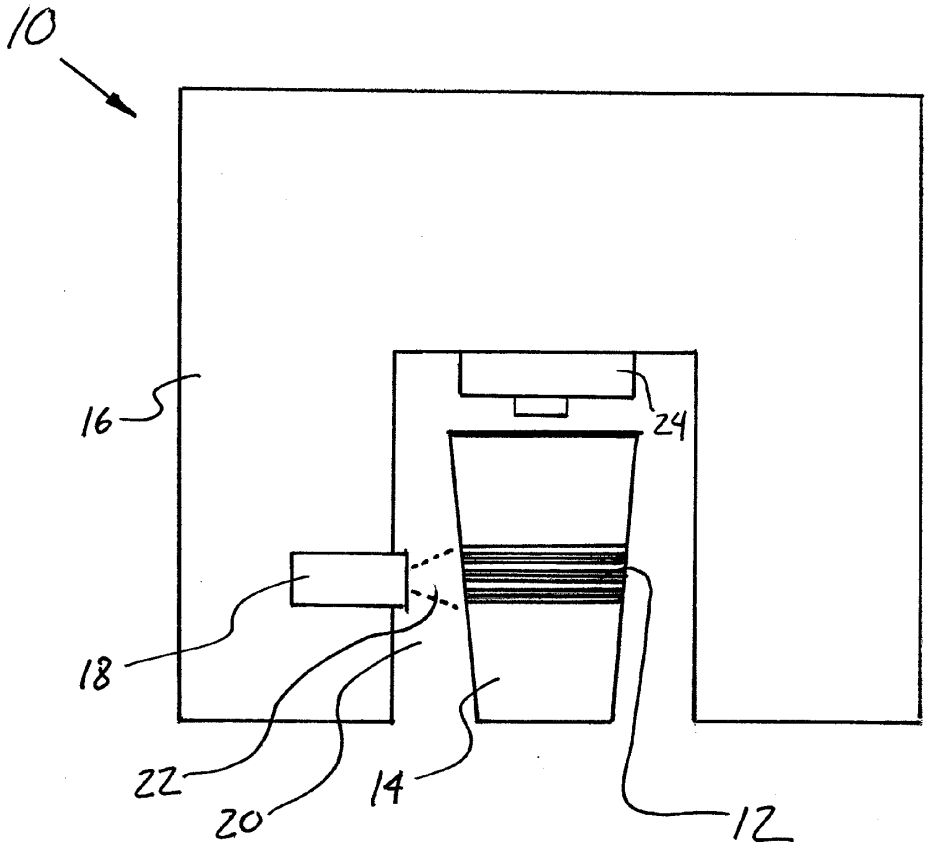

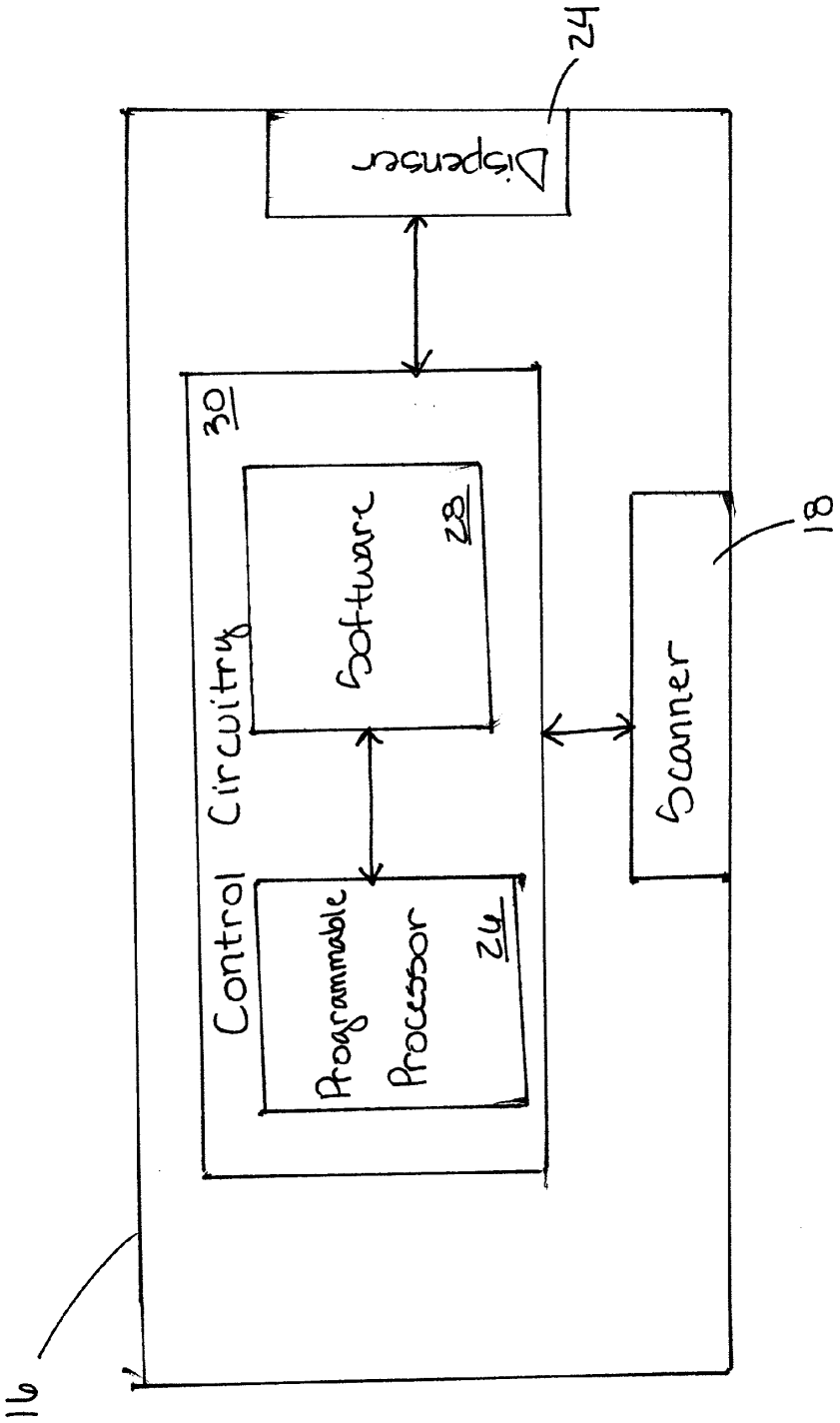
Dispenser
24
30
Control Circuitry
Software
28
Programmable Processor
26
Scanner
18
16

FIG. 2

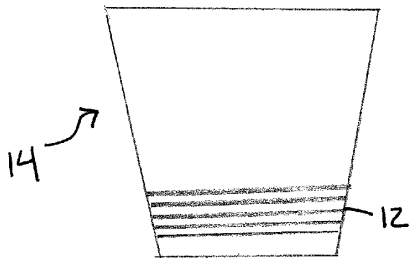

FIG. 3A

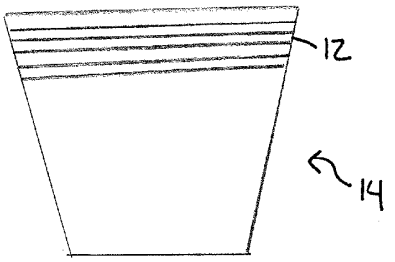

FIG. 3B

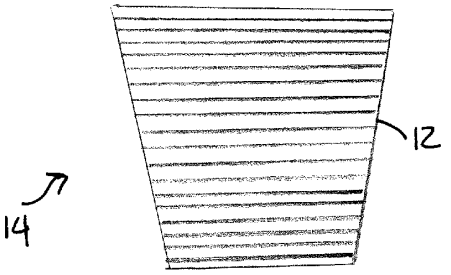

FIG. 3C

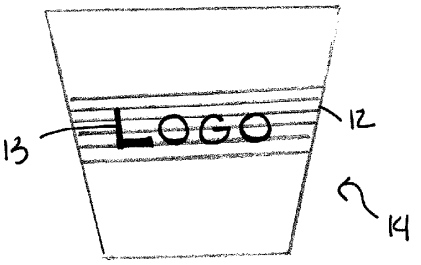

FIG. 3D

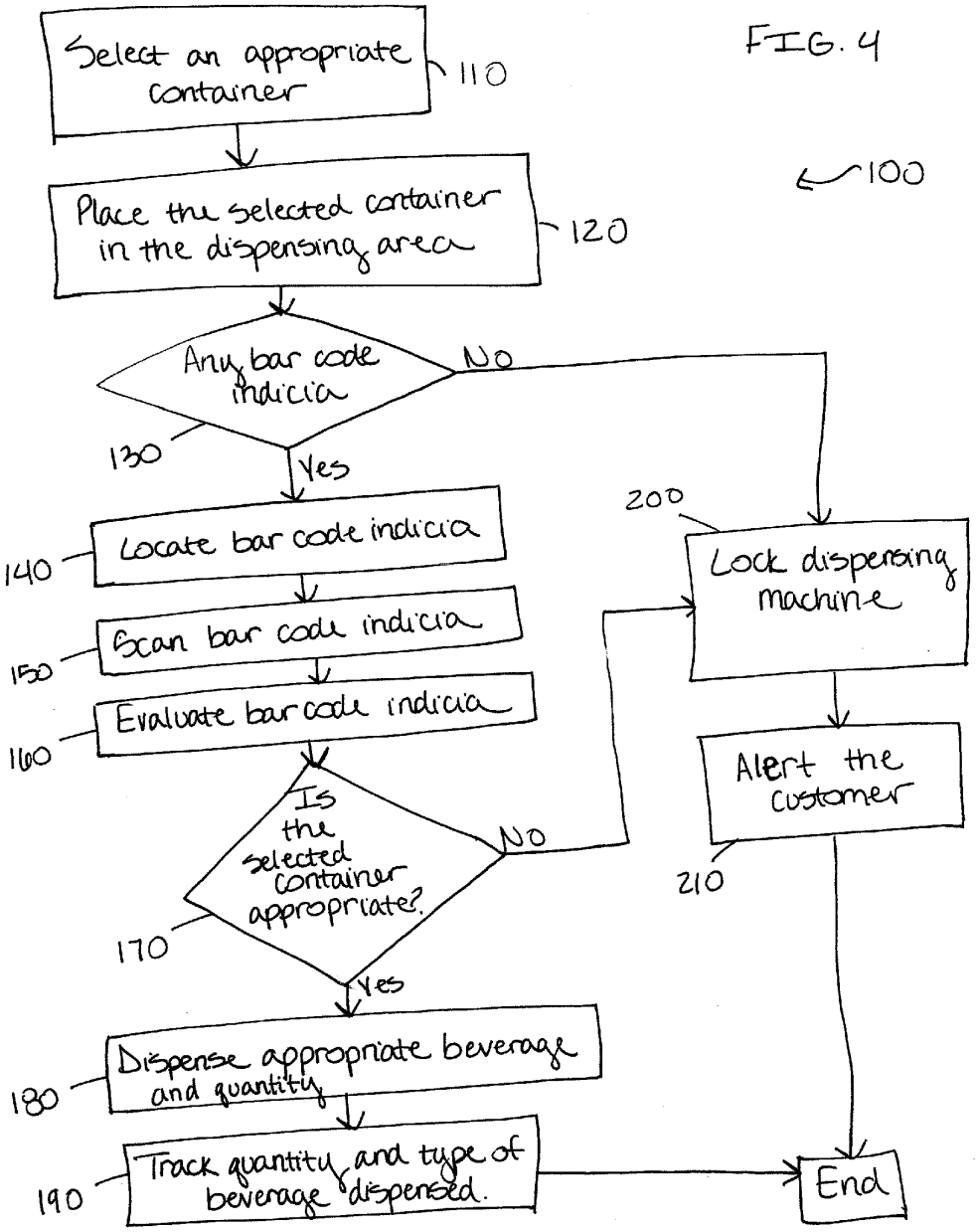
FIG. 4
100
Select an appropriate container
110
Place the selected container in the dispensing area
120
Any bar code indicia
130
No
Yes
Locate bar code indicia
140
Scan bar code indicia
150
Evaluate bar code indicia
160
Is the selected container appropriate?
170
No
Yes
Dispense appropriate beverage and quantity
180
Track quantity and type of beverage dispensed.
190
200
Lock dispensing machine
Alert the customer
210
End

BEVERAGE IDENTIFICATION SYSTEM AND METHOD

CROSS-REFERENCE TO RELATED APPLICATIONS

[0001] This application claims priority to U.S. Provisional Patent Application No. 61/028,579 filed Feb. 14, 2008 titled "Improved Beverage Identification System," which is incorporated herein as if set forth in full.

FIELD OF INVENTION

[0002] The present invention relates generally to a system and method for identifying beverages in a vending situation. More particularly, the present invention relates to a system and method that incorporate annular barcode indicia on beverage containers to identify the type and volume of beverage associated with a particular container so that the beverage can be vended.

BACKGROUND OF THE INVENTION

[0003] Traditionally, many convenience stores have sold beverages using a self-service arrangement in which the consumer uses an automated machine to dispense a desired beverage. The consumer can pay for his purchase by taking the container filled with his desired beverage to the register. Typical beverages dispensed in connection with these types of self-service arrangements can include coffee, specialty cappuccino or espresso drinks, cold drinks, and the like, for example.

[0004] When a consumer wants to purchase a beverage that is dispensed using a self-service arrangement, the consumer must first decide on the type and quantity of beverage to purchase. Then, the consumer must locate the appropriate cup or container, which may depend on the type and quantity of beverage selected. The consumer must appropriately position the cup or container relative to the dispensing machine and push a button or otherwise instruct the machine to dispense the selected beverage.

[0005] Once a consumer has appropriately filled a cup or otherwise caused the cup to be filled with the desired amount of the selected beverage, he must take the beverage to the cashier or vending location and then, depending on the type of cup used and the beverage held therein, verbally identify the type of beverage in the container to a store clerk. In many stores, the store clerk must manually enter the price of the consumer's purchase into the cash register machine to determine the total amount of money owed, including any other purchases and applicable taxes or fees, to allow the consumer to complete the purchase.

[0006] While self-service beverage dispensing arrangements offer some obvious advantages to both the consumer and the store, there are also disadvantages associated with such arrangements. For example, known self-service arrangements do not provide a system or method to charge a consumer different prices for different beverages unless the consumer voluntarily discloses his selected beverage. For example, cups for soda are generally different than cups for coffee, which are often different from cups for frozen drinks. However, a user can, either by mistake or on purpose, select the wrong cup for a particular beverage. Depending on the opacity of a cup and often its lid, it is often not possible to determine what beverage is in the cup. This permits a dishonest consumer to choose a more expensive beverage and report that he has a less expensive beverage to the cashier. Many stores and depots attempt to solve this problem by selling beverages based on only the amount of beverage purchased. That is, the size and type of the cup used in connection with a self-service dispensing machine determines the price. However, it may be advantageous for a store to sell certain premium beverages at a higher price point.

[0007] Furthermore, often there is little, if any, employee supervision over the self-service beverage dispensing process. Stores or depots that provide self-service beverage dispensing arrangements and machines are traditionally designed as low-cost profit centers. That is, often only one or two employees are working in the store at any given time, and the employees are often too busy totaling prices and accepting payment at the register to supervise a self-service beverage dispensing machine.

[0008] The lack of employee supervision can lead to opportunities in which a consumer obtains a higher priced beverage from a machine, but only pays for a lower priced beverage. The cups or containers used in connection with self-service beverage dispensing machines are often visually indistinguishable from one another regardless of what beverage is dispensed therein. Because different beverages can have various price points, often consumers will fill a cup with a high-cost beverage even though the cup is intended for a low-cost beverage. At the register, the consumer can then misinform the store clerk as to the cup's contents so that he or she incorrectly pays for the low-cost beverage. Such deception is deleterious to both the vendor and consumer as the losses sustained by the store must often be made up with higher prices that all must pay.

[0009] Another disadvantage associated with self-service beverage dispensing arrangements is the likelihood of a store clerk charging a consumer the wrong price. After a consumer verbally identifies the beverage dispensed into a container to a store clerk, the clerk must often manually enter the correct price into the register. There is a substantial likelihood that a clerk may enter the price erroneously, either inadvertently or intentionally.

[0010] Still further disadvantages include consumers drinking all or a portion of their beverage while they are still in the store and then improperly refilling their container before visiting the register to pay. When this happens, the consumers are essentially getting some or their entire beverage at the expense of the store owner. In response, a store owner may then raise the cost of beverages for all purchasers.

[0011] Finally, self-service beverage dispensing arrangements make it difficult to track inventory of particular beverages or to track consumer or seasonal trends that may be tied to particular beverages. However, it would be advantageous to a store to accurately track inventory and trends so that the store can be better prepared to meet the needs of its customers while not wasting unnecessary financial resources.

[0012] It is known in the art to identify and track particular beverages or containers by fastening certain indicia to or printing indicia on a cup or container. For example, U.S. Pat. No. 5,378,153 to Gerling et al. titled "Measuring and Dispensing System for Solid Dry Flowable Materials" discloses a sensor that reads a sensor chip on the container when the sensor chip is appropriately aligned with the sensor. Similarly, U.S. Publication No. 2005/0029287 to Mobbs titled "Beverage Dispensing System" discloses a machine sensor that recognizes a barcode marked on a container when the container is situated such that the barcode is in view of the

sensor. In Gerling et al., Mobbs, and other disclosures of such systems, the container must be placed in a specified position and aligned in a specific way with a scanning and dispensing machine so that the machine can recognize the marking, chip, or barcode associated with the container.

[0013] It has been found that consumers have had difficulty with these types of identification or tracking devices because it is often difficult to precisely place the container in position relative to the scanning and dispensing machine. Often, even when a consumer manages to accurately place the container in such a device, the container can be bumped or subsequently moved by the consumer, the force of the beverage being dispensed into the container, or another force that alters the alignment of the container with the machine. In these systems, when the container is not precisely aligned, the scanning and dispensing machine will often not recognize the container and will not dispense the desired beverage. This can cause great frustration to both consumers and store personnel attempting to assist consumers.

[0014] Accordingly, systems and methods have been developed in an attempt to address the frustrations consumers face when trying to precisely align a container with a scanning and dispensing machine. For example, U.S. Pat. No. 7,083,093 to Brown titled "Method and Apparatus for Vending a Containerized Liquid Product Utilizing an Automatic Self-Service Refill System" discloses a machine that includes a turntable on which a container with marking indicia is placed. When a container is placed on the turntable, the turntable can rotate until a scanner associated with the machine reads the marking indicia on the container. That is, the turntable can rotate until the container is properly aligned with respect to the machine and its scanner.

[0015] The machine disclosed in Brown also presents several disadvantages. First, such a machine can be more expensive to manufacture and therefore to purchase. Typically a complex machine is more expensive to maintain relative to traditional self-service beverage dispensing machines because, among other reasons, the movable parts of the turntable and supporting machinery are more expensive to manufacture and are more prone to breakdown and the concomitant replacement and repair expenses. Second, a container placed on the turntable is more likely to spill or become misaligned with the beverage dispenser when the turntable is in motion. Clearly, it is preferable that a self-service dispensing machine be inexpensive to manufacture and maintain and not predisposed to spill beverages.

[0016] U.S. Pat. No. 5,566,732 to Nelson titled "Beverage Dispenser With a Reader for Size Indicia on a Serving Container" discloses a bar code reader that reads a bar code printed on a container. Multiple bar codes can be printed on the container at several locations to make it easier to properly align the container with the machine and an associated bar code reader. However, a consumer must still work to ensure proper alignment and, as explained above, this can at times be a difficult and sometimes frustrating task. Additionally, the aesthetic design of a container with multiple bar codes printed thereon may not be desirable or preferable. There is thus a continuing, ongoing need for an improved beverage identification system and method.

SUMMARY OF THE INVENTION

[0017] According to the present invention, a system and method for dispensing a beverage are provided. The system includes a liquid dispensing machine having a dispensing area capable of receiving a container, a scanner adjacent to the dispensing area, a container that is capable of being placed in the dispensing area, and annular barcode indicia extending around an exterior surface of the container and centered around a generally vertical axis of the container. The scanner can read the annular barcode indicia when the container is placed in the dispensing area at any rotational orientation relative to the scanner. Further, the scanner can be orthogonally oriented relative to the dispensing area.

[0018] In preferred embodiments, the annular barcode indicia extend around at least one of a top, middle, or bottom portion of container. In other embodiments, the annular barcode indicia extend around substantially the entire vertical length of the container. The annular barcode indicia can contain information related to at least one of container size, appropriate container contents, or pricing information, and the liquid dispensing machine can dispense a liquid into the container in accordance with information associated with the annular barcode indicia.

[0019] In embodiments of the present invention, a second scanner coupled to a cash register is provided. The second scanner can read the annular barcode indicia when the container is placed in the vicinity of the second scanner.

[0020] The annular barcode indicia can be printed on the exterior surface of the container or removably affixed to the exterior surface of the container.

[0021] A container for collecting liquid dispensed from a machine is also provided wherein the container includes a receptacle and annular barcode indicia. The receptacle can be defined by interiors of a base and an annular wall and can the have an open end and a closed end. The annular barcode indicia can extend around an exterior surface of the annular wall and can be centered around a generally vertical axis of the container.

[0022] In preferred embodiments, the annular barcode can extend around at least one of a top, middle, or bottom portion of the annular wall. In other embodiments, the annular barcode can extend around substantially the entire vertical length of the annular wall. The annular barcode indicia can contain information related to at least one of container size, appropriate container contents, or pricing information. The annular barcode indicia can be printed on the exterior surface of the container or be removably affixed to the exterior surface of the container.

[0023] A method for dispensing liquid is also provided including placing a container in a dispensing area of a dispensing machine, scanning the annular barcode indicia, and evaluating the annular barcode indicia. The container can have annular barcode indicia extending around an exterior of the container and centered around a generally vertical axis of the container, and the barcode indicia can be scanned regardless of the rotational orientation of the container.

[0024] Evaluating the annular barcode indicia can include determining whether any barcode indicia are detected and/or determining whether the container is appropriate for holding a particular type and amount of liquid. If the container is determined to be appropriate, the method can include dispensing liquid from the dispensing machine into the container. If the container is determined to be inappropriate, the method can include locking the dispensing machine.

[0025] The method can include tracking the quantity and type of any liquid dispensed from the dispensing machine. The method can also include locating the annular barcode indicia. In preferred embodiments, the method can include

displaying a message based on the evaluation of the annular barcode indicia and/or audibly transmitting a message based on the evaluation of the annular barcode indicia.

BRIEF DESCRIPTION OF THE DRAWINGS

[0026] Various examples of objects, features and attendant advantages of the present invention will become fully appreciated as the same becomes better understood when considered in conjunction with the accompanying drawings, wherein:

[0027] FIG. **1** is an elevational view of a beverage dispensing machine and associated container made in accordance with one embodiment of the present invention;

[0028] FIG. **2** is a schematic representation of a beverage dispensing machine made in accordance with the teachings of the present invention.

[0029] FIG. **3**A is an elevational view of a container with annular barcode indicia on a bottom portion thereof in accordance with one embodiment of the present invention;

[0030] FIG. **3**B is an elevational view of a container with annular barcode indicia on a top portion thereof in accordance with one embodiment of the present invention;

[0031] FIG. **3**C is an elevational view of a container with annular barcode indicia along the entire vertical length of the container in accordance with one embodiment of the present invention;

[0032] FIG. **3**D is an elevational view of a container with annular barcode indicia on a middle portion thereof and a logo incorporated in the indicia in accordance with one embodiment of the present invention; and

[0033] FIG. **4** is a flow diagram of a method of dispensing a beverage in accordance with one embodiment of the present invention.

DESCRIPTION OF THE PREFERRED EMBODIMENTS

[0034] While this invention is susceptible of an embodiment in many different forms, there are shown in the drawings and will be described herein in detail specific embodiments thereof with the understanding that the present disclosure is to be considered as an exemplification of the principles of the invention. It is not intended to limit the invention to the specific illustrated embodiments.

[0035] Embodiments of the present invention include a system and method that use annular bar code indicia extending around the exterior surface of a cup or container to identify the type and quantity of beverage associated with that container. In a preferred embodiment, the bar code indicia can contain information related to the type of beverage to be dispensed into the container, the amount of beverage to be dispensed into the container, the cost of the beverage in the container, or any one or more of these parameters in combination, for example. Accordingly, the present invention can provide a system and method for automatically recognizing the type and quantity of beverage to be dispensed and confirming to customers and store personnel that the beverage being purchased is in fact the same beverage that was dispensed into the container.

[0036] A scanner or reader incorporated in an associated beverage dispensing machine is provided to read the indicia on the container and use the information contained therein to dispense the appropriate amount of a particular beverage. At checkout, a store clerk or cashier can use a separate machine to scan the indicia on the container and automatically generate and input the price of the beverage into a cash register or other device used to complete a purchase.

[0037] Because the barcode indicia in embodiments of the present invention are annular and can extend around the exterior surface of a container, the associated scanner in the dispensing machine can read the indicia regardless of the container and indicia's rotational orientation relative to the scanner. That is, as long as the container is oriented with the open end upwards, the rotation of the container and indicia relative to the scanner is irrelevant to the scanner's ability to detect and read the indicia.

[0038] Since the associated scanner can read the indicia regardless of the rotation of the cup when the cup is inserted into the dispensing machine, a customer can be provided with a beverage, as explained in detail below, without having to experiment with the cup or machine, read detailed instructions, or seek assistance from store personnel. This can reduce frustration that some customers encounter when trying to align the indicia with the scanner to activate the beverage dispensing machine. Because the indicia cannot be misaligned with the scanner as long as the open end of the container is oriented upwards, the likelihood that a container will be misaligned with a scanner is reduced if not completely eliminated.

[0039] A beverage dispensing machine in accordance with embodiments of the present invention can include software, control circuitry, and a programmable processor to operate the dispensing machine and scanner and to cause the machine to lock and unlock as explained below. In this way, if a scanner associated with the machine detects acceptable barcode indicia, the control circuitry, associated with the machine can unlock the machine and cause the machine to dispense the appropriate amount and type of beverage. Conversely, if the scanner detects unacceptable barcode indicia or no indicia at all, control circuitry can cause the machine to lock and not dispense any beverage.

[0040] In association with the scanner, software, control circuitry, and programmable processor of the present invention, barcode indicia containing information on quantity and type of beverage can prevent a consumer from using a container that is not intended for a particular type or quantity of beverage by not distributing an incorrect beverage in response to particular indicia. Furthermore, systems and methods of the present invention can prevent customers of a store from attempting to pass off one beverage for another and thereby misinforming store personnel of the type and quantity of beverage dispensed. The method and system can also prevent unauthorized or partial refills of beverages by not dispensing beverages in response to previously used or inappropriate barcode. Barcode indicia containing information on pricing associated with a particular type and quantity of a beverage can eliminate or reduce errors made by store personnel in entering the price for particular a particular beverage.

[0041] Systems and methods in accordance with the present invention can provide stores with an improved method for tracking inventory of particular beverages or tracking consumer or seasonal trends that may be tied to particular beverages. For example, software associated with the beverage dispensing machine can track the amount and type of beverages sold so that accurate statistics can be generated on a daily, weekly, or monthly basis, for example. When barcode indicia is scanned at either the dispensing machine or the register, the amount and type of beverage

dispensed or being purchased could be entered into a tracking database. Generated statistics can be used by store personnel or owners to determine types and quantities in stock and to be ordered or to determine worthwhile promotions that are likely to enhance sales.

[0042] Referring now to FIG. **1**, an exemplary beverage identification system **10** made in accordance with the teachings of the present invention is shown. The system **10** can include a beverage dispensing machine **16**, a dispenser **24**, and a scanner **18**. A cup or container **14** can be used in connection with the machine **16** to collect the liquid dispensed from the dispenser **24**, and the container **14** can include annular barcode indicia **12** on the exterior thereof. It is to be understood that the machine **16**, dispenser **24**, and scanner **18** shown in FIG. **1** are merely exemplary and a variety of beverage dispensing machines, dispensers, containers, and scanning mechanisms as known by those of skill in the art can be used in connection with the present beverage identification system.

[0043] The scanner **18** can be located adjacent to the dispensing area **20** of the machine **16**, and containers **14** can be positioned in the dispensing area **20** so as to be filled with liquid from the dispenser **24**. The scanner **18** can be orthogonally oriented relative to the dispensing area **20** so that when a container **14** is placed in the dispensing area **20**, the scanner **18** projects a generally horizontal beam **22** towards the barcode indicia **12** on the container **14**. In this manner, the scanner **18** can read the barcode indicia **12** causing elements of the system to decipher the information associated therewith.

[0044] As shown in FIG. **1**, the barcode indicia **12**, in embodiments of the present invention, can be annular and situated on an exterior surface of the container **12**. The barcode indicia **12** could be printed on the exterior of the container **12** or removably or fixedly attached thereto using a label or a sleeve, for example.

[0045] The annular barcode indicia **12** can be centered around a generally vertical axis of the container. The arrangement of the barcode indicia **12** can allow the scanner **18** to read the indicia **12** irrespective of the of the container's rotational orientation **14** relative to the scanner **18**. That is, the barcode indicia **12** can be read regardless of the rotation of the container **14** when it is placed in the dispensing area **20** as long as the container is placed with its open end facing upwards.

[0046] It is to be understood that the barcode indicia **12** shown in FIG. **1** is merely exemplary and the indicia can be located at any height along the vertical axis of the container **14**. As seen in FIG. **1**, the indicia **12** are circumferentially placed around the middle portion of the container **14**. However, the annular indicia **12** can be located around a bottom portion of the container **14** as seen in FIG. **3**A or around a top portion of the container **14** as seen in FIG. **3**B or any combination thereof. Similarly, the scanner **18** can be located at a variety of different positions and can have a variety of different dimensions to allow for reading the indicia on containers placed in the dispensing area. The size and placement of the scanner **18** as shown in FIG. **1** are merely exemplary.

[0047] In embodiments of the present invention, the annular barcode indicia **12** can be located on substantially the entire vertical length of the container **14**: from the top end to the bottom end thereof as seen in FIG. **3**C. Similarly, the scanner **18** can have an effective reading width such that the scannable area extends the entire length of the wall in the dispensing area **20**.

[0048] In other embodiments, a scanner **18** can search for the annular indicia **12** by traversing up and down on an axis generally perpendicular to the central vertical axis of the container. In this embodiment, the scanner **18** can search and find the indicia **12** no matter where along the height of the container **14** the indicia **12** are placed.

[0049] In still further embodiments, containers **14** containing barcode indicia **12** can also have wording, markings, or logos thereon or applied thereto. The wording, markings, or logos could be on areas of the container with no barcode indicia or, wording, markings, or logos could be incorporated into the barcode indicia as seen in FIG. **3**D. Incorporating a logo into or onto barcode indicia can make the container aesthetically pleasing to customers while still making the indicia functional to the store and the dispensing machine.

[0050] The barcode indicia **12** can represent or be encoded with information related to the container on which the indicia are printed as well as the beverage to be dispensed therein. The indicia can represent information or data about the size of the associated container, the type and nature of beverages that are appropriate for dispensing in the associated container, the appropriate amount of liquid that can be dispensed in the associated container, pricing information for beverages that can be dispensed in the associated container, and the like all without limitation. For example, a 16-ounce coffee cup can have different indicia than a 20-ounce cup of cola, which can have different indicia than a 36-ounce frozen beverage. It is to be understood that the types of information or data represented by or embedded in the barcode indicia are not limitations of the present invention.

[0051] Additionally, the indicia can provide a safety check for consumers. For example, certain containers might only be suitable for cold beverages because the container might be incapable of retaining its physical integrity in the presence of a very hot beverage. This coded information concerning the type of appropriate beverage or capacity of the container can be included in the barcode indicia on the container and, when read by the scanner, prevent the dispensing of a hot beverage into a container designated only for cold beverages. Accordingly, the likelihood of the accidental scalding of a customer can be reduced if not eliminated.

[0052] Referring now to FIG. **2**, an exemplary block diagram of the beverage dispensing machine **16** is shown. As seen in FIG. **16**, the machine **16** can include a programmable processor **26**, software **28**, and associated control circuitry **30**. In methods of using the beverage identification system **10** of FIG. **1**, a user can place a container **14** with the annular barcode indicia **12** in the dispensing area **20**, and the scanner **18** can read the indicia **12**. The scanner **18** can send the read indicia **12** to the control circuitry **30**. Using the software **28**, the programmable processor **26** can evaluate the indicia **12** and direct the control circuitry **30** to dispense only the appropriate type and amount of liquid that corresponds to the barcode indicia **12**.

[0053] The programmable processor **26** can lock the machine **16** to prevent it from dispensing any liquid if a cup **12** without barcode indicia is determined to be in the dispensing area **20** or if an improper cup **12** is being used in connection with the machine **16**. In embodiments of the present invention, the programmable processor can send commands to the control circuitry **30** to visually or audibly alert a consumer of

any errors or irregularities. Appropriate alerting devices are known to those having ordinary skill in the art.

[0054] A method **100** of dispensing a beverage in accordance with one embodiment of the present invention is shown in FIG. **4**. A user can select an appropriate container in **110** such that the selected container should be appropriate for being filled with a desired type and quantity of beverage. The user can place the selected container in the dispensing area in **120**, and then the programmable processor, in association with the scanner, can determine if there are any barcode indicia on the container in **130**. If there are barcode indicia, the scanner can locate the indicia in **140**, scan the indicia in **150** and the programmable processor, in association with the control circuitry and software, can evaluate the scanned indicia in **160**. If the container is deemed appropriate in **170**, the control circuitry, in association with the programmable processor and software, can cause a proper amount of the appropriate beverage to be dispensed into the container in **180**, and the type and quantity of beverage dispensed can be tracked in **190**.

[0055] However, the container could be determined inappropriate if, for example, the container is not designated for receiving a particular type of beverage. If the container is deemed inappropriate in **170**, the control circuitry could lock the machine in **200** and notify the user that an improper cup is being used and/or direct the user to an appropriate cup in **210**.

[0056] Appropriate cups or containers for particular beverages or for particular machines could be designated by color, location, size or the like, for example, all without limitation. Accordingly, a store could have one type of container designated for higher priced products and another type of container designated for lower priced products, for example. In embodiments of the present invention, a beverage will only be dispensed by placing an appropriately marked container in the dispensing area of the machine; placing any other container in the dispensing area will result in no beverage being dispensed to the inappropriate container.

[0057] Once a container has been appropriately filled by a beverage dispensing machine, a user can take the filled container to the cash register for checkout. The barcode indicia can be scanned at the register to generate the price corresponding to the beverage in the container.

[0058] Systems and methods in accordance with the present invention can be used in connection with all different types of beverages, including beverages that are sold in the same size of container but at different price points. For example, a beverage dispensing machine in accordance with the present invention can dispense barista-style coffees and lattes or more functional beverages with added vitamins, fiber, omega-3, or other ingredients that have traditionally been difficult to manage in known self-service arrangements.

[0059] From the foregoing, it will be observed that numerous variations and modifications may be effected without departing from the spirit and scope of the invention. It is to be understood that no limitation with respect to the specific apparatus or method illustrated herein is intended or should be inferred. It is, of course, intended to cover by the appended claims all such modifications as fall within the scope of the claims.

What is claimed is:

1. A system for dispensing a beverage comprising:

a liquid dispensing machine having a dispensing area capable of receiving a container;

a scanner adjacent to the dispensing area;

a container that is capable of being placed in the dispensing area; and

annular barcode indicia extending around an exterior surface of the container and centered around a generally vertical axis of the container such that the scanner can read the annular barcode indicia when the container is placed in the dispensing area at any rotational orientation relative to the scanner.

2. The system for dispensing a beverage of claim **1** wherein the annular barcode indicia extend around at least one of a top, middle, or bottom portion of container.

3. The system for dispensing a beverage of claim **1** wherein the annular barcode indicia extend around substantially the entire vertical length of the container.

4. The system for dispensing a beverage of claim **1** wherein the annular barcode indicia contain information related to at least one of container size, appropriate container contents, or pricing information.

5. The system for dispensing a beverage of claim **1** further comprising a second scanner coupled to a cash register wherein the second scanner can read the annular barcode indicia when the container is placed in the vicinity of the second scanner.

6. The system for dispensing a beverage of claim **1** wherein the liquid dispensing machine dispenses a liquid into the container in accordance with information associated with the annular barcode indicia.

7. The system for dispensing a beverage of claim **1** wherein the scanner is orthogonally oriented relative to the dispensing area.

8. The system for dispensing a beverage of claim **1** wherein the annular barcode indicia are printed on the exterior surface of the container.

9. The system for dispensing a beverage of claim **1** wherein the annular barcode indicia are removably affixed to the exterior surface of the container.

10. A container for collecting liquid dispensed from a machine comprising:

a receptacle defined by interiors of a base and an annular wall, the receptacle having an open end and a closed end; and

annular barcode indicia extending around an exterior surface of the annular wall and centered around a generally vertical axis of the container.

11. The container of claim **10** wherein the annular barcode extend around at least one of a top, middle, or bottom portion of the annular wall.

12. The container of claim **10** wherein the annular barcode extend around substantially the entire vertical length of the annular wall.

13. The container of claim **10** where in the annular barcode indicia contain information related to at least one of container size, appropriate container contents, or pricing information.

14. The container of claim **10** wherein the annular barcode indicia are printed on the exterior surface of the container.

15. The container of claim **10** wherein the annular barcode indicia are removably affixed to the exterior surface of the container.

16. A method for dispensing liquid comprising:

placing a container in a dispensing area of a dispensing machine, the container having annular barcode indicia extending around an exterior of the container and centered around a generally vertical axis of the container;

scanning the annular barcode indicia, the barcode indicia being scanned regardless of the rotational orientation of the container; and

evaluating the annular barcode indicia.

17. The method for dispensing liquid of claim **16** wherein evaluating the annular barcode indicia further comprises determining whether any barcode indicia are detected.

18. The method for dispensing liquid of claim **16** wherein evaluating the annular barcode indicia further comprises determining whether the container is appropriate for holding a particular type and amount of liquid.

19. The method for dispensing liquid of claim **18** further comprising dispensing liquid from the dispensing machine into the container if the container is determined to be appropriate.

20. The method for dispensing liquid of claim **19** further comprising tracking quantity and type of liquid dispensed from the dispensing machine.

21. The method for dispensing liquid of claim **18** further comprising locking the dispensing machine if the container is determined to be inappropriate.

22. The method for dispensing liquid of claim **16** further comprising locating the annular barcode indicia.

23. The method for dispensing liquid of claim **16** further comprising displaying a message based on the evaluating of the annular barcode indicia.

24. The method for dispensing liquid of claim **16** further comprising audibly transmitting a message based on the evaluating of the annular barcode indicia.

* * * * *