(12) INTERNATIONAL APPLICATION PUBLISHED UNDER THE PATENT COOPERATION TREATY (PCT)

(19) World Intellectual Property Organization
International Bureau

(43) International Publication Date
6 September 2013 (06.09.2013)

WIPO | PCT

(10) International Publication Number
WO 2013/130117 A1

(51) International Patent Classification: *A47C 27/10* (2006.01)

(21) International Application Number: PCT/US2012/042079

(22) International Filing Date: 12 June 2012 (12.06.2012)

(25) Filing Language: English

(26) Publication Language: English

(30) Priority Data:

201220075742.7	2 March 2012 (02.03.2012)	CN
201210053146.3	2 March 2012 (02.03.2012)	CN
201220075738.0	2 March 2012 (02.03.2012)	CN
201210053183.X	2 March 2012 (02.03.2012)	CN

(71) Applicant *(for all designated States except US)*: **INTEX RECREATION CORPORATION** [US/US]; 703 East Roosevelt Road, Long Beach, CA 90807 (US).

(72) Inventors; and

(75) Inventors/Applicants *(for US only)*: **LIN, Hua, Hsiang** [US/CN]; No. 858 Wengjiao Road, Xinyang Industrial Zone, Haicang, Xiamen, Fujian (CN). **HSU, Yaw, Yuan** [—/CN]; No. 858 Wengjiao Road, Xinyang Industrial Zone, Haicang, Xiamen, Fujian (CN).

(74) Agent: **HEDGES, Norman, J.**; Faegre Baker Daniels LLP, 300 North Meridian Street, Suite 2700, Indianapolis, IN 46204 (US).

(81) Designated States *(unless otherwise indicated, for every kind of national protection available)*: AE, AG, AL, AM, AO, AT, AU, AZ, BA, BB, BG, BH, BR, BW, BY, BZ, CA, CH, CL, CN, CO, CR, CU, CZ, DE, DK, DM, DO, DZ, EC, EE, EG, ES, FI, GB, GD, GE, GH, GM, GT, HN, HR, HU, ID, IL, IN, IS, JP, KE, KG, KM, KN, KP, KR, KZ, LA, LC, LK, LR, LS, LT, LU, LY, MA, MD, ME, MG, MK, MN, MW, MX, MY, MZ, NA, NG, NI, NO, NZ, OM, PE, PG, PH, PL, PT, QA, RO, RS, RU, RW, SC, SD, SE, SG, SK, SL, SM, ST, SV, SY, TH, TJ, TM, TN, TR, TT, TZ, UA, UG, US, UZ, VC, VN, ZA, ZM, ZW.

[Continued on next page]

(54) Title: INTERNAL TENSIONING STRUCTURE USABLE WITH INFLATABLE DEVICES

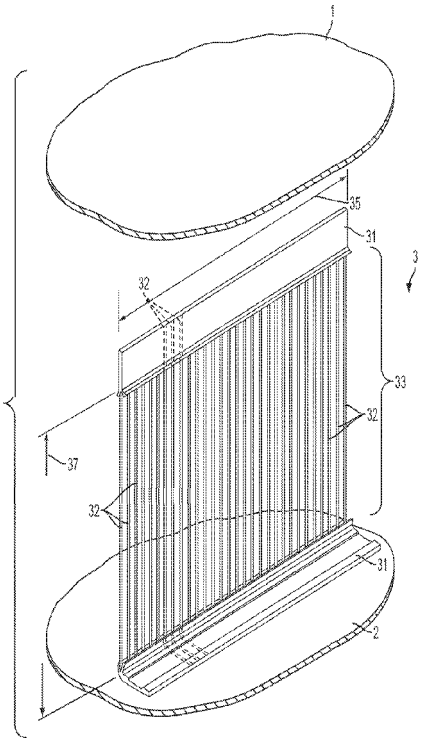

FIG. 1

(57) Abstract: An internal tensioning structure for use in an inflatable product fulfills the basic function of maintaining two adjacent inflatable surfaces in a desired geometric arrangement when the inflatable product is pressurized. The tensioning structure is formed by connecting a pair of plastic strips sheets via spaced-apart strands, such as strings or wires. When pulled taut, the strands provide a high tensile strength between the two opposed plastic strips. At the same time, the plastic strips facilitate a strong, long-lasting weld between the tensioning structure and the inflatable product.

WO 2013/130117 A1

(84) **Designated States** *(unless otherwise indicated, for every kind of regional protection available)*: ARIPO (BW, GH, GM, KE, LR, LS, MW, MZ, NA, RW, SD, SL, SZ, TZ, UG, ZM, ZW), Eurasian (AM, AZ, BY, KG, KZ, RU, TJ, TM), European (AL, AT, BE, BG, CH, CY, CZ, DE, DK, EE, ES, FI, FR, GB, GR, HR, HU, IE, IS, IT, LT, LU, LV, MC, MK, MT, NL, NO, PL, PT, RO, RS, SE, SI, SK, SM, TR), OAPI (BF, BJ, CF, CG, CI, CM, GA, GN, GQ, GW, ML, MR, NE, SN, TD, TG).

Published:

— *with international search report (Art. 21(3))*

INTERNAL TENSIONING STRUCTURE USABLE WITH INFLATABLE DEVICES

BACKGROUND

1. Technical Field.

[0001] The present disclosure relates to an inflatable product structure, and in particular to an inflatable product structure which is light in weight and low in cost.

2. Description of the Related Art.

[0002] Inflatable products, are light in weight, easy to house, and easy to carry. Such products technologies have been used for outdoor items and toys, as well as various household goods including inflatable beds, inflatable sofas and the like.

[0003] Many inflatable products utilize internal structures in order to form the product into its intended, predetermined shape upon inflation. For example, one type of inflatable bed, referred to as a wave-shaped, straight-strip or I-shaped inflatable bed, may include a tension-band type internal structure arranged along wave-shaped, straight-line or I-shaped pathways within the internal cavity. Another type of inflatable bed, referred to as a column-type inflatable bed, has tension bands arranged into honeycomb-shaped or cylindrical structures within the inflatable cavity.

[0004] These internal tension-band structures disposed in the cavity of the inflatable bed give shape to the bed as internal pressure increases, thereby preventing the inflatable bed from expanding evenly on all sides in the manner of a balloon. More particularly, in order to maintain an inflatable bed as a rectangular shape, the tension bands join the upper and lower surfaces of the inflatable bed to one another. To allow passage of pressurized air to both sides of these joining structures, the tension bands may be formed as belts stretching between the upper and lower surfaces, or as vertical expanses of material with air columns formed therein. The number and spacing of the tension bands is proportional to the sharpness of the rectangularity of the inflated product. That is to say, a greater number and/or linear extent of tension bands within the pressurized cavity results in a more “flat” bed surface.

[0005] In conventional inflatable products such as the inflatable beds described above, the tension bands are made of PVC sheets with a sufficient thickness to ensure spreading of force and concomitant reductions in stress in the product material. For example, the tension bands of known inflatable beds or sofas may have a thickness of about 0.36 mm. For some known water carrier devices, such as inflatable swimming pools, the internal tension bands may have a thickness of about 0.38 mm, while "sandwich" type inflatable swimming pools may have a thickness of 0.7-0.8 mm.

[0006] Thus, conventional inflatable structures utilizing belt- or sheet-like PVC tension bands meet the force requirements of the product by varying the thickness of the tension bands. However, where continuous plastic strips or belts are utilized, such tension bands contribute to increased weight of the inflatable product. Similarly, an increase in thickness and/or spatial density of solid-strip tension bands also increases the compressed/folded volume of the deflated inflatable structure.

SUMMARY

[0007] The present disclosure provides an internal tensioning structure for use in an inflatable product, and a method for producing the same. The tensioning structure fulfills the basic function of maintaining two adjacent inflatable surfaces in a desired geometric arrangement when the inflatable product is pressurized. The tensioning structure is formed by connecting a pair of plastic strips sheets via spaced-apart strands, such as strings or wires. When pulled taut, the strands provide a high tensile strength between the two opposed plastic strips. At the same time, the plastic strips facilitate a strong, long-lasting weld between the tensioning structure and the inflatable product.

[0008] Various configurations of the tensioning structure are contemplated within the scope of the present disclosure. In one embodiment, a pair of parallel plastic strips has a plurality of strands extending therebetween to connect the plastic strips to one another, with the strands substantially parallel to one another and substantially perpendicular to the plastic strips. In another embodiment, a similar arrangement of two parallel plastic strips are connected by a plurality of strands with each adjacent pair of such strands converging to a point at one of the plastic strips in a "V" configuration. Either embodiment may be incorporated into a tensioning structure with one of

INTEX EX. 1052, Pg. 4
Intex Recreation v. Bestway Inflatables, IPR2023-00486

a number of geometric arrangements within the inflatable cavity, such as linear, cylindrical, wave-shaped, etc.

[0009] According to one embodiment thereof, the present disclosure provides an inflatable product comprising: a first sheet and a second sheet disposed opposite the first sheet, the first and second sheets spaced apart to define a gap when the inflatable product is inflated. The inflatable product further includes a tensioning structure having a gap portion spanning the gap between the first sheet and the second sheet to maintain a spatial relationship between the first and second sheets when the inflatable product is inflated. The gap portion has an extent measured along the surface of at least one of the first sheet and the second sheet. The gap portion occupies a volume and has an operable area occupied by gap portion of the tensioning structure defined as the total area of the gap between the first sheet and the second sheet, as measured along the extent of the gap portion of the tensioning structure. The gap portion of the tensioning structure defines an operable area-to-volume ratio of at least 10 square millimeters per cubic millimeter.

[0010] According to another embodiment thereof, the present disclosure provides an inflatable product comprising: a first sheet and a second sheet disposed opposite the first sheet. The first and second sheets are spaced apart to define a gap when the inflatable product is inflated. The inflatable product further includes a tensioning structure having a gap portion spanning the gap between the first sheet and the second sheet to maintain a spatial relationship between the first and second sheets when the inflatable product is inflated. The gap portion has an extent measured along the surface of at least one of the first sheet and the second sheet. The gap portion has an operable area occupied by gap portion of the tensioning structure defined as the total area of the gap between the first sheet and the second sheet, as measured along the extent of the gap portion of the tensioning structure. The gap portion of the tensioning structure has a total weight such that the tensioning structure defines an operable area-to-weight ratio of at least 6,000 square centimeters per kilogram.

[0011] According to another embodiment thereof, the present disclosure provides an inflatable product comprising: a first sheet and a second sheet disposed opposite the first sheet. The first and second sheets are spaced apart to define a gap when the inflatable product is inflated; The inflatable product further comprises a tensioning structure having a gap portion spanning the gap between the first sheet and the second sheet to maintain a spatial relationship between the first

INTEX EX. 1052, Pg. 5
Intex Recreation v. Bestway Inflatables, IPR2023-00486

and second sheets when the inflatable product is inflated. The gap portion of the tensioning structure has an average thickness of less than 0.125 millimeters.

[0012] According to yet another embodiment thereof, the present disclosure provides an inflatable product comprising: a first sheet; a second sheet disposed opposite the first sheet, the first and second sheets spaced apart to define a gap; a tensioning structure spanning the gap between the first sheet and the second sheet, the tensioning structure comprising: a plurality of strands uniformly spaced apart and arranged substantially parallel to one another; and a plurality of weld strips spaced apart from one another and substantially perpendicular to the plurality of strands, each of the plurality of weld strips affixed to each of the plurality of strands, and each of the plurality of weld strips affixed to at least one of the first sheet and the second sheet.

[0013] According to still another embodiment thereof, the present disclosure provides an inflatable product comprising: a first sheet; a second sheet disposed opposite the first sheet, the first and second sheets spaced apart to define a gap; a tensioning structure spanning the gap between the first sheet and the second sheet, the tensioning structure comprising: a plurality of strands uniformly spaced apart and arranged in parallel; and a first weld sheet having the plurality of strands affixed to an upper surface of the first weld sheet.

[0014] According to still another embodiment thereof, the present disclosure provides an inflatable product comprising: a first sheet; a second sheet disposed opposite the first sheet, the first and second sheets spaced apart to define a gap; a tensioning structure spanning the gap between the first sheet and the second sheet, the tensioning structure comprising: an upper weld strip; a lower weld strip arranged substantially parallel to the upper weld strip and spaced apart from the upper weld strip span the gap between the first sheet and the second sheet; and a plurality of end-to-end V-shaped strands arranged between weld strips, each of the V-shaped strands having upper and lower ends fixed to the upper and lower weld strips, respectively.

[0015] According to still another embodiment thereof, the present disclosure provides an inflatable product comprising: a first sheet; a second sheet disposed opposite the first sheet, the first and second sheets spaced apart to define a gap, the first sheet and the second sheet cooperating to at least partially bound an inflatable chamber; a plurality of tensioning structures welded to respective inner surfaces of the first and second sheets such that the plurality of tensioning structure span the gap, each of the plurality of tensioning structures comprising: an upper weld

INTEX EX. 1052, Pg. 6
Intex Recreation v. Bestway Inflatables, IPR2023-00486

strip affixed to one of the first sheet and the second sheet; a lower weld strip affixed to the other of the first sheet and the second sheet; and a plurality of strands connecting the upper and lower weld strips to one another.

[0016] According to still another embodiment thereof, the present invention provides an inflatable product comprising: a first sheet; a second sheet disposed opposite the first sheet, the first and second sheets spaced apart to define a gap, the first sheet and the second sheet cooperating to at least partially bound an inflatable chamber; a plurality of tensioning structures welded to inner surfaces of the first and second sheets such that the plurality of tensioning structures span the gap, each of the plurality of tensioning structures comprising: a weld sheet; a plurality of strands, and the plurality of strands substantially evenly spaced and arranged substantially parallel to one another, the plurality of strands affixed to the weld sheet; and a weld strip affixed to each end of the weld sheet such that a longitudinal extent of the weld strip is substantially perpendicular to the plurality of strands, respective ends of the plurality of strands are affixed to the weld strip, and each of the weld strips are welded to one of the first sheet and the second sheet.

[0017] According to still another embodiment thereof, the present invention provides a method for producing a tensioning structure of an inflatable product, the method comprising: arranging at least one of a welder and an adhesive device downstream of a strand guide; supplying a plurality of strands to the welder or the adhesive device via the strand guide, such that the supplied strands are substantially uniformly spaced apart and arranged substantially parallel to one another; positioning weld strips on a first die of the welder or gluing device, the weld strips having a longitudinal extent corresponding to an overall width of the plurality of strands; advancing a second die of the welder or gluing device into an operable position in which the first and second dies are disposed at opposing sides of the weld strips, activating the welder or gluing device to fixedly connect the weld strips to the plurality of strands, such that the weld strips are affixed to the plurality of strands in a spaced apart and substantially parallel arrangement, and such that the weld strips are substantially perpendicular to the plurality of strands.

[0018] According to still another embodiment thereof, the present invention provides a method for producing a tensioning structure of an inflatable product comprises: arranging a hot roller downstream of a strand guide; supplying a plurality of strands to the hot roller via the strand guide, such that the supplied strands are substantially uniformly spaced apart and arranged

INTEX EX. 1052, Pg. 7
Intex Recreation v. Bestway Inflatables, IPR2023-00486

substantially parallel to one another; arranging a conveying roller downstream of the strand guide, the conveying roller operable to deliver at least one weld sheet to the hot roller, the at least one weld sheet having a width corresponding to an overall width of the plurality of strands; and passing the plurality of strands and the at least one weld sheet through the hot roller, such that the plurality of strands become affixed to the at least one weld sheet.

[0019] According to still another embodiment thereof, the present invention provides a method for producing a tensioning structure, the method comprising: arranging a first pair of weld strips parallel to one another on a joining device; wrapping at least one continuous strand around a plurality of members arranged along a pair of rows adjacent the first pair of weld strips, respectively, each of the pair of rows of members offset with respect to the other of the pair of rows of members, the step of wrapping comprising alternating between the pair of rows, such that the at least one continuous strand forms a plurality of end-to-end V-shaped strands; and using the joining device to join the first pair of weld strips to the plurality of strands at respective V-shaped corners formed by the at least one continuous strand, such that the tensioning structure has a tensile strength along a direction perpendicular to a longitudinal extent of the first pair of weld strips.

BRIEF DESCRIPTION OF THE DRAWINGS

[0020] The above mentioned and other features and advantages of this disclosure, and the manner of attaining them, will become more apparent and the invention itself will be better understood by reference to the following description of embodiments of the invention taken in conjunction with the accompanying drawings, wherein:

[0021] Fig. 1 is an exploded, perspective view of an inflatable structure incorporating a tensioning structure made in accordance with the present disclosure;

[0022] Fig. 2 is an enlarged perspective view of the tensioning structure shown in Fig. 1;

[0023] Fig. 3 is an exploded, perspective view of an inflatable bed incorporating tensioning structures made in accordance with the present disclosure;

[0024] Fig. 4 is an assembled view of the inflatable bed of Fig. 3, in which the inflatable bed material is made transparent to show the internal arrangement of the tensioning structures;

INTEX EX. 1052, Pg. 8
Intex Recreation v. Bestway Inflatables, IPR2023-00486

[0025] Fig. 5 is an exploded, perspective view of an inflatable bed incorporating an alternative geometric arrangement of tensioning structures made in accordance with the present disclosure;

[0026] Fig. 6 is an assembled view of the inflatable bed of Fig. 5, in which the inflatable bed material is made transparent to show the internal spatial arrangement of the tensioning structures;

[0027] Fig. 7 is a perspective view of an apparatus for producing bulk material for the tensioning structures shown in Figs. 3-6;

[0028] Fig. 8 is an exploded, perspective view showing a first embodiment of the bulk material created by the apparatus of Fig. 7;

[0029] Fig. 9 is a perspective view showing a first embodiment of the bulk material created by the apparatus of Fig. 7;

[0030] Fig. 10 is a perspective view showing a second embodiment of the bulk material created by the apparatus of Fig. 7;

[0031] Fig. 11 is a perspective view showing a second embodiment of the bulk material created by the apparatus of Fig. 7;

[0032] Fig. 12 is an exploded, perspective view of a first alternative tensioning structure made in accordance with the present disclosure;

[0033] Fig. 13 is an assembled, perspective view of the first alternative tensioning structure shown in Fig. 12;

[0034] Fig. 14 is an exploded, perspective view of a second alternative tensioning structure made in accordance with the present disclosure;

[0035] Fig. 15 is an exploded, perspective view of a third alternative tensioning structure made in accordance with the present disclosure;

[0036] Fig. 16 is an assembled, perspective view of the third alternative tensioning structure shown in Fig. 15;

[0037] Fig. 17 is an exploded, perspective view of a fourth alternative tensioning structure made in accordance with the present disclosure;

[0038] Fig. 18 is an exploded, perspective view of a fifth alternative tensioning structure made in accordance with the present disclosure;

INTEX EX. 1052, Pg. 9
Intex Recreation v. Bestway Inflatables, IPR2023-00486

[0039] Fig. 19 is an assembled, perspective view of the fifth alternative tensioning structure shown in Fig. 18;

[0040] Fig. 20 is an exploded, perspective view of an inflatable bed incorporating alternative tensioning structures made in accordance with the present disclosure;

[0041] Fig. 21 is an assembled view of the inflatable bed of Fig. 22, in which the inflatable bed material is made transparent to show the internal arrangement of the tensioning structures;

[0042] Fig. 22 is an exploded, perspective view of an inflatable bed incorporating an alternative tensioning structures made in accordance with the present disclosure, configured in an alternative geometric arrangement;

[0043] Fig. 23 is an assembled view of the inflatable bed of Fig. 22, in which the inflatable bed material is made transparent to show the internal spatial arrangement of the tensioning structures;

[0044] Fig. 24 is a perspective view of an apparatus for producing bulk material for the first through fifth alternative tensioning structures shown in Figs. 12-19;

[0045] Fig. 25 is an exploded, perspective view of a sixth alternative tensioning structure made in accordance with the present disclosure;

[0046] Fig. 26 is an assembled, perspective view of the sixth alternative tensioning structure shown in Fig. 25;

[0047] Fig. 27 is an exploded, perspective view of an inflatable bed incorporating the sixth alternative tensioning structure shown in Fig. 25;

[0048] Fig. 28 is an assembled view of the inflatable bed of Fig. 27, in which the inflatable bed material is made transparent to show the internal arrangement of the tensioning structures;

[0049] Fig. 29 is a perspective view of an apparatus for producing bulk material for the sixth alternative tensioning structures shown in Figs. 25-28;

[0050] Fig. 30 is an exploded, perspective view of a seventh alternative tensioning structure made in accordance with the present disclosure;

[0051] Fig. 31 is an assembled, perspective view of the seventh alternative tensioning structure shown in Fig. 30;

[0052] Fig. 32 is a perspective view of an apparatus for producing bulk material for the seventh alternative tensioning structures shown in Figs. 30 and 31;

INTEX EX. 1052, Pg. 10
Intex Recreation v. Bestway Inflatables, IPR2023-00486

[0053] Fig. 33 is a top plan view of portions of tensioning structures bunched together during a welding process;

[0054] Fig. 34 is a top plan view of portions of a tensioning structure collapsed when the mattress is deflated for storage or shipment;

[0055] Fig. 35 is a view similar to Fig. 33 showing portions of tensioning structures with strands placed in piles during a welding process; and

[0056] Fig. 36 is a view similar to Fig. 33 showing portions of tensioning structures shifted relative to each other during a welding process.

[0057] Corresponding reference characters indicate corresponding parts throughout the several views. The exemplifications set out herein illustrate exemplary embodiments of the present invention, and such exemplifications are not to be construed as limiting the scope of the invention in any manner.

DETAILED DESCRIPTION

[0058] The present disclosure provides tensioning structures which give shape to inflatable devices, such as inflatable couches, beds or swimming pools. The tensioning structures are lightweight and occupy minimal volume when the device is deflated and packed away, while also functioning as a strong and durable internal support upon inflation and use of the inflatable device.

[0059] An exemplary tensioning structure in accordance with the present disclosure utilizes thin and flexible string- or wire-like strands which join two areas of fabric to one another. The strands are firmly connected to the adjacent fabric via an intermediate material, such as a strip or sheet, and the intermediate material is in turn firmly connected to the fabric. The area of contact between intermediate material and the attached strands may be manipulated to impart a connection strength commensurate with the tensile strength of the strand. Similarly, the area of contact between the intermediate material and the adjacent fabric may also be manipulated to impart a fabric/tensioning structure connection strength commensurate with the aggregate tensile strength of all strands in the tensioning structure.

[0060] Various tensioning structures and methods of manufacturing the same are described in detail below. It is contemplated that any of the present described tensioning structures

INTEX EX. 1052, Pg. 11
Intex Recreation v. Bestway Inflatables, IPR2023-00486

may be used in any inflatable product, either alone, as a group or in combination with one another as required or desired for a particular design. In addition, it is contemplated that tensioning structures in accordance with the present disclosure can be used in other contexts, such as in camping equipment, or in any other context where a lightweight, packable structure is needed to join two pieces of material that are urged away from one another in use.

1. Weld Strips Joined By Spaced-Apart Strands.

[0061] Turning now to Figs. 1 and 2, tensioning structure 3 is shown joining upper material 1 to lower material 2. In the illustrated embodiment, tensioning structure 3 includes upper and lower weld strips 31 connected to one another by a plurality of substantially parallel strands 32 that define a gap portion extending between a gap between upper and lower sheets 1, 2. The upper and lower weld strips 31 are in turn welded to the upper material 1 and the lower material 2, respectively, such that forces urging upper and lower materials 1, 2 are encountered by tension in strands 32.

[0062] Optionally, reinforcing strands 5 (Fig. 3) may be provided along the longitudinal extent of weld strip 31 (i.e., substantially perpendicular to strands 32). Reinforcing strands 5, when provided, may be coupled to tensile strands 32, such as by folding strands 32 over reinforcing strands 5, tying strands 5, 32 to one another, or adhesively securing strands 5, 32 to one another. When so coupled, reinforcing strands 5 provide additional surface area contact with weld strips 31 and thereby improve the resistance of securing strands 5 to pulling free from weld strips 31. In addition, the presence of reinforcing strands 32 within weld strips 31 improves the tensile strength of weld strips 31 along their longitudinal extents.

[0063] The plurality of strands 32 in the tensioning structure 3 as shown in Figs. 1 and 2 are arranged such that the strands 32 are substantially parallel to one another when strands 32 are pulled taut (i.e., when weld strips 31 are drawn away from one another). In addition, adjacent pairs of strands 32 may have even intervals therebetween, such that a substantially constant tensile strength of tensioning structure 3 is maintained across the longitudinal extent of weld strips 31. In an exemplary embodiment, strands 32 may extend along the entire width of weld strips 31, as illustrated in Figs. 1 and 2, such that a large area of contact between strands 32 and weld strips 31

INTEX EX. 1052, Pg. 12
Intex Recreation v. Bestway Inflatables, IPR2023-00486

is achieved. For clarity, Figs. 1 and 2 illustrate only a limited number of strands 32 affixed to strips 31 in this way, it being appreciated that all strands 32 in a tensioning structure 3 may be so affixed.

[0064] In one exemplary application shown in Figs. 3 and 4, a number of tensioning structures 3 are used in an inflatable structure such as air mattress 10, which includes a sleeping surface at upper material 1 and a ground-contacting surface at lower material 2. Annular side band 4 is fixedly connected or welded to the peripheries of the upper material 1 and the lower material 2 to form an inflatable chamber. A valve 6 may be provided to facilitate inflation and deflation of the mattress 10.

[0065] Although mattress 10 is shown as a single layer, double layers may also be provided. Additional mattress features may also be provided such as those shown in US Patent No. 7,591,036 titled Air-Inflated Mattress, the entire disclosure of which is expressly incorporated by reference herein. In addition to mattresses, tensioning structure may be used in other inflatable products such as inflatable boats, inflatable islands, floatation devices, swimming pools, inflatable slides, and any other inflatable devices.

[0066] Each of the plurality of tensioning structures 3 is welded to respectively opposed portions of the inner surfaces of upper and lower materials 1, 2, as described in detail above. As shown in Figs. 3 and 4, the tensioning structure 3 of the illustrated embodiment defines an overall longitudinal extent (that is, along the longitudinal direction of weld strips 31) corresponding to the width or length of the sleeping and ground-contacting materials 1, 2 of mattress 10.

[0067] As noted above, tensioning structures 3 are connected to upper and lower material 1, 2 by weld strips 31. Such welding is accomplished by abutting one of weld strips 31 to one of upper and lower materials 1, 2 and then applying heat to melt and fuse the material of weld strips 31 to the abutting material. In an exemplary embodiment, weld strips 31 and upper and lower material 1, 2 are both made of PVC, and the welding process is accomplished by applying 105 degree Celsius heat for approximately 0.5 seconds. Upper and lower sheets 1, 2 and weld strips 31 have thicknesses ranging from 0.15 to 1.0 millimeters with 0.34 millimeters being preferred for upper and lower sheets 1, 2 and 0.18 millimeters being preferred for weld strips 31. Weld strips 31 are preferably 12.7 millimeters wide and may range from 1 to 100 millimeters wide. The PVC used preferably has a tensile strength ranging from at least 7 kgf/cm to 73 kgf/cm and a density

INTEX EX. 1052, Pg. 13
Intex Recreation v. Bestway Inflatables, IPR2023-00486

ranging from 0.8-2.5 grams per centimeter cubed with a preferred density of 1.5 grams per centimeter cubed.

[0068] In Figs. 3 and 4, tensioning structures 3 are welded to upper and lower material 1, 2 along a substantially linear path, with the plurality of structures 3 substantially parallel to one another and equally spaced across materials 1, 2. However, it is contemplated that the welding geometry may take any other suitable geometry, such as a wave-like path, I-shaped path, Z-shaped path or V-shaped path. One exemplary alternative geometry is a cylindrical or columnar arrangement, as illustrated in Figs. 5 and 6. In this arrangement, upper and lower weld strips 31 are each connected at their ends in an end-to-end manner to form an arcuate ring, such as a circular ring as illustrated. The plurality of strands 32 between the upper and lower weld strips 31 thus form a closed columnar periphery, thereby forming the body of a column. Upon assembly of inflatable bed 10, this column is welded to upper and lower materials 1, 2 in a similar fashion as described herein with respect to linearly arranged tensioning structure 3.

[0069] When mattress 10 is inflated, the introduction of pressurized air into the cavity of mattress urges upper and lower materials 1, 2 apart from one another. When sufficiently pressurized, strands 32 become taut and tensioning structures 3 prevent any further spreading apart of upper and lower materials 1, 2 in the vicinity of each tensioning structure 3. Further pressurization causes further tensile stress within tensioning structures 3, and additional forces on the weld between tensioning structures 3 and the adjacent material.

[0070] In an exemplary embodiment of mattress 10, tensioning structure 3 includes as few as one strand every two centimeters, 1, 2, 3, 4, strands per centimeter of longitudinal extent of weld strips 31, or as much as 5, 10, 15, 20, 30, 40, 50, or more strands per centimeter, or may have any number of strands per centimeter within any range defined by any of the foregoing values. According to the preferred embodiment, there is about 2.8 millimeters between strands (i.e., 3.6 strands per centimeter). Strands 32 may be made of regular cotton, polyester, nylon thread made of multiple filaments twisted together, of the type typically used in clothing seams, or any other strand types. These regular threads provide substantial tensile strength at a very low cost. According to alternative embodiments, strands 32 may be woven together to form a fabric. According to another embodiment, non-woven fabric may be used to form the portion of tensioning structure 3 extending through the gap between sheets 1, 2.

INTEX EX. 1052, Pg. 14
Intex Recreation v. Bestway Inflatables, IPR2023-00486

[0071] According to the present disclosure, the threads may range from diameters of 0.1 to 1.0 millimeters. According to the preferred embodiment, the thread has a diameter of 0.2 millimeters. According to the present disclosure, the tensile strength of the threads may range from 0.2 kgf to 10kgf per thread. According to the preferred embodiment, the tensile strength of the thread is 3kgf per thread. According to the preferred embodiment, the threads have a density range from 0.01 to .3 grams per meter. According the preferred embodiment, the threads are 0.085 grams per meter. Of course, it is appreciated that other materials could be used, such as monofilament lines, metal wires or cables, plastic and the like.

[0072] The above-described exemplary arrangement of tensioning structure 3 yields a strong finished product suitable for use in a wide variety of inflatable products. In exemplary embodiments, tensioning structure 3 has strands 32 with an overall axial span between 5 centimeters and 65 centimeters, rendering strands 32 suitable to span a correspondingly sized gap formed between the spaced-apart weld strips 31. Therefore, this exemplary embodiment is suitable for use in mattress 10 having an inflated thickness approximately equal to the axial span of strands 32. This exemplary embodiment further uses the regular thread material noted above with a strand density in the ranges given above. The resulting exemplary tensioning structure 3 has an overall tensile strength between 5.9 and 23.3 kgf per linear centimeter (where linear centimeters are measured along the longitudinal extent of weld strips 31).

[0073] When mattress 10 is inflated, tensioning structure defines an operable area along its longitudinal extent and across the gap between upper and lower materials 1, 2. More particularly, the area occupied by tensioning structure 3 is defined as the total area of the gap between the material sheets joined by tensioning structure 3, with such gap measured along the longitudinal extent of the tensioning structure such that the measured area is inclusive of each of the plurality of strands 32. Where tensioning structure 3 is linearly arranged and upper and lower materials 1, 2 are parallel to one another (as shown, for example, in Figs. 3 and 4), this area is simply the longitudinal extent of tensioning structure 3 multiplied by the space between upper and lower materials 1 and 2. Where tensioning structure 3 takes a non-linear path (such as the columnar, arcuate path shown in Figs. 5 and 6, for example), or upper and lower materials 1 and 2 are non-parallel, the above-described method for measuring area still results in an accurate operable area.

INTEX EX. 1052, Pg. 15
Intex Recreation v. Bestway Inflatables, IPR2023-00486

[0074] The above-described exemplary arrangement of tensioning structure 3 achieves high tensile strength while promoting light weight and low packed volume of the finished inflatable product. According to the present disclosure, strands 32 and the area between strands 32 define a gap portion 33 (see Fig. 1) of tensioning structure 3 spanning the gap between upper and lower materials/sheets 1, 2 that maintains a spatial relationship between the first and second sheets when mattress 10 is inflated. As shown in Fig. 1, the collection of strands 32 that define this gap portion 33 having an extent 35 measured along the surface of at least one of first sheet 1 and second sheet 2. Strands 32 of this gap portion 33 of tension structure 3 collectively occupy a volume. Gap portion 33 has an operable area defined by extent 35 of gap portion 33 (also closely approximate to a length of weld strips 31) and length 37 of strands 32. The operable area is occupied by strands 32 of tensioning structure 3 and defines a total area of the gap between first sheet 1 and second sheet 2, as measured along extent 35 of gap portion 33 of tensioning structure 3. For example, if strands 32 of an example tension structure have a length 37 of 100 millimeters between first and second sheets 1, 2 and extent 35 of gap portion 33 is 100 millimeters, the operable area of gap portion 33 defined by strands 32 is 10,000 square millimeters. Assuming that there are 3.6 strands per centimeter, there will be 3,571 millimeters of strands 32 within the 10,000 square millimeter operable area. If strands 32 have a diameter of 0.2 millimeters, the total volume occupied by strands 32 will be 112.2 millimeters cubed. In this example, gap portion 33 of tensioning structure 3 defines an operable area-to-volume ratio of 89.13 millimeters squared per millimeters cubed (ex. 10,000 millimeter squared/112.2 millimeters cubed). According to the present disclosure, the operable area-to-volume ratio may range from 10 to 3,000 millimeters squared per millimeter cubed.

[0075] Because of use of strands 32 rather than PVC sheets, the overall weight of mattress 10 can also be reduced. Gap portion 33 of tensioning structure 3 defined by strands 32 has a total weight and operable area, as discussed above. In the above example, the operable area was 10,000 square millimeters (100 millimeters by 100 millimeters) and there were 3.6 strands per centimeter. This results in 3,571 millimeters of thread. At a density of 0.085 grams per meter of thread, the total thread will weigh 0.304 grams. As a result, an operable area-to-weight ratio will be about 32,941 square millimeters per gram (or 329,412 square centimeters per kilogram) in the preferred embodiment (ex. 10,000 square millimeters/0.304 grams). According to some embodiments of the

INTEX EX. 1052, Pg. 16
Intex Recreation v. Bestway Inflatables, IPR2023-00486

present disclosure, the operable area-to-weight ratio is between 8,000 and 5,000,000 square centimeters per kilogram. According to other embodiments, the operable area-to-weight ratio is between 12,500 and 2,500,000 square centimeters per kilogram. According to other embodiments, the operable area-to-weight ratio is between 20,000 and 1,000,000 square centimeters per kilogram.

[0076] Because of use of strands 32 rather than PVC sheets, the average thickness of gap portion 33 of tensioning structure 3 extending between first and second sheets 1, 2 can also be reduced. Gap portion 33 of tensioning structure 3 defined by strands 32 has an average thickness and operable area, as discussed above. The average thickness is reduced by the nominally circular cross section of strands 32 and the gaps between each strand 32.

[0077] For example, the maximum thickness of gap portion 33 is the diameter of strands 32 (0.2 millimeters in the above example). The minimum thickness of gap portion 33 is zero in unoccupied areas between strands 32. When averaged over the total area of gap portion 33 occupied by strands 32 and the total area of gap portion 33 without strands 33, the average thickness is less than the diameter of strands 32. Furthermore, if the distance between strands 32 is increased, the average thickness decreases because more of gap portion 33 is unoccupied by strands (i.e., the amount of gap portion 33 with zero thickness increases, which decreases the average thickness of gap portion 33).

[0078] In the above example, the operable area was 10,000 square millimeters (100 millimeters by 100 millimeters) and there were 3.6 strands per centimeter (or 2.8 millimeter from strand 32 to strand 32). In contrast to the maximum thickness of a circular thread, which is the diameter, the average thickness of a circular thread is pi*diameter/4. Using strands 32 with a diameter of 0.2 millimeters, results in average thickness of 0.157 millimeters for each strand 32. Because of the gaps between strands 32, the average thickness of gap portion 33 defined by strands 32 and the gaps therebetween is 0.0112 millimeters (i.e. 2.8 millimeters between strands 32 has a thickness of zero, which reduces the average thickness of gap portion 33 to much less than the average thickness of strands 32). According to some embodiments of the present disclosure, the average thickness of the gap portion of tensioning structure 3 is between 0.0003 to 0.1 millimeters. According to other embodiments, the average thickness is between 0.001 and 0.05 millimeters. According to other embodiments, the average thickness is between 0.005 and 0.02 millimeters.

INTEX EX. 1052, Pg. 17
Intex Recreation v. Bestway Inflatables, IPR2023-00486

[0079] Turning now to Fig. 7, an apparatus 20 suitable for manufacturing tensioning structure 3 is shown. To operate apparatus 20 to this end, a plurality of strands 32 are provided from a bulk thread supply 11, which may be a yarn stand containing several spools of yarn for example. Thread supply 11 continuously delivers the plurality of strands 32 via strand guide A, which includes a plurality of apertures through which individual strands 32 pass after delivery from thread supply 11 and before incorporation into bulk tensioning structure material 30 (shown in Fig. 9 and described below). Strand guide A maintains uniform spacing of strands 32 from one another, and arranges strands 32 parallel to one another such that the plurality of strands 32 are substantially planar. The width of weld strips 31, the distance between neighboring pairs of weld strips 31, and the spacing between neighboring pairs of strands 32 can be set to any values as required or desired by an intended use, such as in a particular inflatable product.

[0080] These planar, parallel and even spaced strands 32 are then passed in to welder 40, as shown in Fig. 7. Welder 40 may be a thermofusion device, using heat to join two plastic materials together, or may be a high-frequency welder, in which electromagnetic waves take advantage of excitable chemical dipoles in the plastic material to soften and join the materials to one another. Moreover, any suitable welding method may be employed by welder 40, as required or desired for a particular material and process. Another alternative is to forego a welding process and use adhesive to join strands 32 to weld strips 31. Where adhesive connection is utilized, welder 40 may be replaced by a similarly arranged adhesive device, such as a gluing device. Yet another alternative is to utilize a sewing machine to mechanically join weld strips 31 to strands 32. Moreover, weld strips 31 need not be welded to upper or lower materials 1, 2, and the term "weld strip" as used herein refers to any strip of material suitable for affixation to another material, whether by application of heat, application of adhesive, mechanical joining methods such as sewing and riveting, or any other suitable method.

[0081] Weld strips 31, having a length corresponding to the width of the arranged plurality of strands 32, are positioned on lower dies B1 of welder 40. Strands 32 are advanced over weld strips 31 as illustrated, and upper dies B2 are then lowered into contact with weld strips 31. Energy (i.e., heat or electromagnetic waves) is applied to fixedly connect the weld strip 31 with each of the plurality of strands 32 such that the respective strands 32 are fixed in the spaced apart and parallel

INTEX EX. 1052, Pg. 18
Intex Recreation v. Bestway Inflatables, IPR2023-00486

configuration dictated by strand guide A. When so fixed, bulk material 30 (Fig. 9) is complete and ready for use.

[0082] The finished bulk material 30 may then be delivered to a take-up device (not shown), such as a spool or roll. This allows bulk material 30 to be continuously produced and stored for later use. Bulk material 30 can be converted into tensioning structure 3 (Fig. 2) by cutting down the center of weld strip 31. Tensioning structure 3 can then be applied to various inflatable products by trimming the length and width thereof according to the dimensions of the product.

[0083] As noted above, reinforcement strand 5 may be added to tensioning structure 3 to further improve the strength thereof, including the tensile strength of weld strips 31. To add at least one reinforcement strand 5 to bulk material 30, reinforcement strands 5 are arranged perpendicular to the plurality of strands 32, and abutting the respective weld strips 31. Upper die B2 of welder 40 is pressed down to fixedly connect the weld strips 31 to both reinforcement strands 5 and the plurality of strands 32, as described above. Reinforcement strands 5 are illustrated in Fig. 3 but omitted from Fig. 4 for clarity.

[0084] As shown in Fig. 4, tensioning structures 30 are positioned within band 4 and welded to upper and lower sheet 1, 2. Although shown as perpendicular to sheets 1, 2 in Fig. 4, after welding, weld strips 31 lay flat on sheets 1, 2 after welding as shown in the lower portion of Fig. 1. Similarly, in mattresses 10 of Figs. 6, 21, 23, and 28, weld strips 31 are shown perpendicular to sheets 1, 2, but will lay flat on sheets 1, 2 upon welding as shown in the lower portion of Fig. 1.

[0085] As illustrated in Figs. 8 and 9, bulk material 30 (Fig. 9) may be formed using a single layer of weld strips 31 connecting to strands 32. In another exemplary embodiment shown in Figs. 10 and 11, bulk material 30 may be manufactured as a dual layer structure using a pair of weld strips both above and below strands 32. The use of two mutually opposed weld strips employs a gripping action to "trap" or capture the strands 32 therebetween, thereby contributing to a high-strength coupling interface. When implemented in an inflatable product, the resulting dual-layer tensioning structure 3 has improved strength and can be welded to upper or lower material 1, 2 (Figs. 1, 3 and 4) on either side. As shown in Figs. 10 and 11 and discussed above, at least one reinforcement strand 5 may also be captured between the weld strips 31.

INTEX EX. 1052, Pg. 19
Intex Recreation v. Bestway Inflatables, IPR2023-00486

2. Sheet-Backed Tensioning Structures with Affixed Strands.

[0086] An alternatively arranged tensioning structure is shown in Figs. 12 and 13 as tensioning structure 103. Structure 103 is substantially similar to tensioning structure 3 described above, with reference numerals of structure 103 analogous to the reference numerals used in structure 3, except with 100 added thereto. Elements of structure 103 correspond to similar elements denoted by corresponding reference numerals of structure 3, except as otherwise noted.

[0087] Tensioning structure 103 includes a plurality of strands 32 which are evenly spaced and arranged substantially parallel to one another, in a similar fashion to tensioning structure 3 described above. However, tensioning structure 103 includes weld sheet 131 in place of weld strips 31 of structure 3. Rather than affixing the ends of strands 32 to weld strips 31, the entire length of strands 32 are affixed to weld sheet 131. Weld sheet 131 serves to provide for proper positioning and protection of the plurality of strands 32, such as to avoid knotting or damage of strands 32 during practical use. However, because tensioning structure 103 includes strands 32 embedded therein, weld sheet 131 does not need to bear significant tensile loads and can be kept to a minimal thickness. For example, weld sheet 131 may be 0.10 millimeters in thickness.

[0088] In Figs. 12 and 13, a single weld sheet 131 is used, though other arrangements are contemplated. Fig. 14, for example, illustrates tensioning structure 103 (Fig. 13) with an extra weld sheet 131 applied opposite the first weld sheet 131. Similar to the embodiment of tensioning structure 3 using mutually opposed weld strips 31 (Figs. 10 and 11), the mutually opposed weld sheets 131 may be used to encapsulate strands 32.

[0089] Figs. 15 and 16 illustrate tensioning structure 203, which is substantially similar to tensioning structure 3 described above, with reference numerals of structure 203 analogous to the reference numerals used in structure 3, except with 200 added thereto. Elements of structure 203 correspond to similar elements denoted by corresponding reference numerals of structure 3, except as otherwise noted. However, structure 203 represents a hybrid approach combining elements of tensioning structures 3 and 103, in which a plurality of weld strips 31 are used to encapsulate a portion of strands 32 between strips 31 and weld sheet 131. The addition of weld strips 31 to the weld sheet 131 improves the strength of the weld connection between tensioning structure 203 and

INTEX EX. 1052, Pg. 20
Intex Recreation v. Bestway Inflatables, IPR2023-00486

the adjacent product material (e.g., upper and/or lower material 1, 2 of inflatable bed 10 shown in Figs. 2 and 3).

[0090] Figs. 17 illustrates tensioning structure 303, which is substantially similar to tensioning structure 3 described above, with reference numerals of structure 303 analogous to the reference numerals used in structure 3, except with 300 added thereto. Elements of structure 303 correspond to similar elements denoted by corresponding reference numerals of structure 3, except as otherwise noted. Moreover, structure 303 incorporates all the elements of tensioning structure 203 but adds a second, lower layer of weld strips 31 attached to weld sheet 131 opposite the first, upper layer of weld strips 31. Thus, there is a dual-layer structure of opposing weld strips 31 further augmenting weld sheet 131, rendering tensioning structure 303 very strong and robust both along the extent of strands 32 and at the weld between strands 32 and the adjacent material, e.g., material 1, 2 of inflatable bed 10 (Figs. 3 and 4).

[0091] Turning to Figs. 18 and 19, yet another tensioning structure 403 is illustrated. Tensioning structure 403 is substantially similar to tensioning structure 3 described above, with reference numerals of structure 403 analogous to the reference numerals used in structure 3, except with 400 added thereto. Elements of structure 403 correspond to similar elements denoted by corresponding reference numerals of structure 3, except as otherwise noted. However, the plurality of strands 32 used in structure 403 are discontinuous. As shown in Figs. 13 and 14, the plurality of strands 32 may be trimmed to any desired length, and then affixed to weld sheet 131 by hot pressing. Upon installation into an inflatable product use, the affixed strands 32 may be cut to length, and welded into place as described above. Thus, using tensioning structures 403 has the potential to reduce consumption of the material used for strands 32 and avoid unnecessary waste thereo, thereby lower material cost.

[0092] Optionally, as shown in Fig. 20, each end of the weld sheet 131 (i.e., at the ends of strands 32) may include a reinforcing strand 5 arranged similarly to tensioning structure 3 discussed above. Reinforcing strands 5 are omitted from Fig. 21 for clarity.

[0093] The sheet-backed embodiments illustrated as tensioning structures 103, 203, 303 and 403 in Figs. 12-19 may be integrated into an inflatable device in a similar fashion as tensioning structures 3 described above. For example, Figs. 20 and 21 illustrate integration of tensioning

INTEX EX. 1052, Pg. 21
Intex Recreation v. Bestway Inflatables, IPR2023-00486

structures 103 into inflatable bed 10, which is accomplished by the same method as described above.

[0094] Tensioning structures 103, 203, 303 and 403 may also be formed into a variety of geometric configurations, as discussed above with respect to tensioning structure 3. These configurations include a wave-like path, I-shaped path, Z-shaped path or V-shaped path. As illustrated in Figs. 22 and 23, is a cylindrical or columnar arrangement may also be utilized. In this arrangement, weld sheet 131 (and upper and lower weld strips 31, if present) is connected at its ends in an end-to-end manner to form an arcuate ring, such as a circular ring as illustrated. The plurality of strands 32 between thus cooperate with the material of weld sheet 131 to form a closed columnar periphery, thereby forming the body of a column. The axial ends of this columnar structure can then be welded to upper material 1 and lower material 2, respectively, of inflatable bed 10.

[0095] Turning now to Fig. 24, an apparatus 120 suitable for manufacturing tensioning structures 103, 203, 303 or 403 is shown. Operation of apparatus 120 is accomplished by first supplying a plurality of strands 32 from a yarn stand or other stock of yard, as described above with respect to apparatus 20. Strands 32 are continuously delivered via strand guide A, described above, which provides uniformly spaced apart and parallel strands 32 to the downstream welder 140.

[0096] Welder 140 includes a conveying roller C downstream of strand guide A, which continuously delivers a weld sheet 131 of width sufficient to correspond to the width of the plurality of strands 32. Downstream of roller C, the plurality of strands 32 are near to or abutting weld sheet 131.

[0097] The plurality of strands 32 and weld sheet 131 then advance together through hot roller D, which heats and compresses the material such that strands 32 become fixed to the softened material of weld sheet 131. After passage through roller D, tensioning structure 103 as shown in Fig. 13 is complete. The bulk material for tensioning structure 103 may be wound onto a take-up spool for later cutting into a tensioning structure 103 of appropriate size for a particular application.

[0098] When the thus tensioning structure 103 is applied to an inflatable product such as inflatable bed 10 (Figs. 21 and 22), the weld sheet 131 may have a relatively small thickness given

INTEX EX. 1052, Pg. 22
Intex Recreation v. Bestway Inflatables, IPR2023-00486

the level of internal pressure (and, therefore, tension) expected to be encountered by structure 103 during inflation and use of the product. For example, the thickness may be reduced by 20%-40% with respect known internal tensioning structures lacking strands 32. Because strands 32 are positioned and configured to bear the tensile loads applied to tensioning structure 103, weld sheet 131 need only provide for proper positioning and protection of the plurality of strands 32, such as to avoid knotting or damage of strands 32 during practical use. In one exemplary embodiment, the thickness of weld sheet 131 may be as small as 0.10 millimeters.

[0099] Where a second weld sheet 131 is added to tensioning structure 103, as shown in Fig. 14 and described above, a second roller C (not shown) may be provided opposite the illustrated roller C of Fig. 24, such that rollers C are disposed on either side of strands 32. Both sheets 131 are then passed through the hot pressing roller D, capturing strands 32 between the two layers of plastic sheets.

[00100] Where a plurality of weld strips 31 are added to create tensioning structure 203, as shown in Figs. 15 and 16 and described above, a finished tensioning structure 103 made using apparatus 120 may be further processed using apparatus 20 as shown in Fig. 7 and described above. After the intermediate sheeted product equivalent to tensioning structure 103 exiting from hot rollers D, weld strips 31 may be added to one or both sides of the intermediate sheeted product. At least one reinforcement strand 5 may be added as required or desired, such that reinforcement strands 5 are perpendicular to the plurality of strands 32, as described in detail above.

[00101] Where weld strips 31 are added to both sides of a sheeted intermediate product to create tensioning structure 303, a process similar to the above may be employed in which an intermediate sheeted product exits rollers D and receives additional weld strips 31. However, weld strips 31 are added to both sides instead of to a single side, in accordance with the method of manufacturing a dual-layer version of bulk material 30 using welder 40 as described above. Of course, at least one reinforcement strand 5 may be added in a similar fashion as previously described.

3. Weld Strips Joined By V-Shaped Strands.

[00102] An alternatively arranged tensioning structure is shown in Figs. 25 and 26 as tensioning structure 503. Structure 503 is substantially similar to tensioning structure 3 described

above, with reference numerals of structure 503 analogous to the reference numerals used in structure 3, except with 500 added thereto. Elements of structure 503 correspond to similar elements denoted by corresponding reference numerals of structure 3, except as otherwise noted.

[00103] However, strand 532 in tensioning structure 503 have a staggered, V-shaped arrangement, and may be formed from a single strand wound back and forth rather than a plurality of separate and discrete strands as used in tensioning structure 3 for example. As described below in the context of the method of manufacture of tensioning structure 503, strand 532 may be a single, continuous strand woven between weld strips 31, 31', with the point of each "V" affixed to at least one of the weld strips 31, 31'.

[00104] Turning now to Fig. 29, an apparatus 220 suitable for manufacturing tensioning structure 503 is shown. Operation of apparatus 220 is accomplished by disposing a lower pair of weld strips 31 such that the lower pair are substantially parallel and spaced apart upon joining device 540. In the illustrated embodiment, weld strips 31 are unspooled from rolls of weld strip material contained within a pair of unreeling devices 550.

[00105] Next, continuous strand 532 is wrapped successively around a set of adjacent hook-shaped members 541 disposed at either side of joining device 540, with the plurality of hook-shaped members 541 arranged in two respective rows corresponding to the location of the previously-placed lower pair of weld strips 31. In an exemplary embodiment, hook-shaped members 541 are uniformly spaced from one another and arranged at the outer sides of lower pair of weld strips 31, with each row of hook-shaped members 541 offset with respect to the other row. With this arrangement, the continuous strand 532 forms a plurality of end-to-end “V” shaped strands when wrapped around successive hook-shaped members 541 in alternating rows thereof, as shown. That is to say, the corner of each "V" is formed at a respective hook-shaped members 541, and successive corners traced along continuous strand 532 will alternate between rows of hook-shaped members 541.

[00106] Next, a second pair of weld strips 31' are positioned over the first pair of weld strips 31, respectively, and are clamped thereto such that each "V" shaped corner formed by strand 532 is disposed between one of the first pair of weld strips 31 and the abutting one of the second pair of weld strips 31'. The second pair of weld strips 31' may also be unspooled from unreeling devices 550.

INTEX EX. 1052, Pg. 24
Intex Recreation v. Bestway Inflatables, IPR2023-00486

[00107] Finally, the abutting pairs of weld strips 31, 31' are joined to one another and to strand 532, such as by welding or by one of the other attachment methods discussed above. For example, weld strips 31, 31', may be joined by a high frequency welder or another thermofusion device. It is also contemplated that strand 532 can be fixed to weld strips 31, 31', and weld strips 31 can be fixed to weld strips 31', by adhesive or by sewing.

[00108] As with other tensioning structures discussed above, tensioning structure 503 may be produced and stored in bulk and later applied to various inflatable products. The length and width of tensioning structure 503 may be trimmed to accommodate the internal length or width of the inflatable product.

[00109] In one alternative embodiment, it may be not necessary to provide the second layer of weld strips 31', and instead to fix only the first layer of weld strips 31 to the strand 532. Fixing strand 532 to the single layer of weld strips 31 may be accomplished in a similar fashion to the single-layer weld strip and weld sheet embodiments described above.

[00110] Turning to Figs. 30-32 tensioning structure 503 may also be provided with at least one reinforcement strand 5 extending along the longitudinal extent of at least one of weld strips 31, 31'. Similar to the uses of reinforcement strands 5 in the embodiments described above, reinforcement strands 5 may be arranged on one of the lower pair of weld strips 31 and/or between the lower and upper pairs of weld strips 31, 31'.

[00111] A tensioning structure in accordance with the present disclosure, including tensioning structures 3, 103, 203, 303, 403 and 503 discussed above, has a high tensile strength along the axial extent of the strands 32, 532 extending between respective weld strips and/or along weld sheets. This high tensile strength is complemented with a full-strength weld between the adjacent material of an inflatable product, which is facilitated by the full surface-area contact provided by the weld strip and/or weld sheet interface between strands 32, 532 and such adjacent material. In this way, the tensioning structure performs well an internal structure of the inflatable product, while facilitating an overall reduction in weight and deflated/folded volume of the inflatable product. For example, a loose arrangement of strands 32 is significantly lighter than a one-piece sheet of comparable size and tensile strength.

[00112] Where weld sheets 131 are employed, such sheets act to ensure a consistent position and arrangement of the plurality of strands 32 (or 532), thereby prevent such strands from

INTEX EX. 1052, Pg. 25
Intex Recreation v. Bestway Inflatables, IPR2023-00486

becoming wound or otherwise entangled with one another. Meanwhile, weld strips 31 can be utilized to provide a robust structure for welding the tensioning structure into the inflatable product, thereby ensuring that the high tensile strength offered by the strands of the tensioning structure is fully realized. In addition, the use of weld sheet 131 can significantly reduce the weight of the entire inflatable product with respect to a traditional, relatively thicker one-piece sheet which is also responsible for handling tensile loading. In other words, weld sheet 131 reduces by 20%-40% in thickness with respect to an existing tensioning structures having comparable thicknesses of 0.36 mm to 0.8 mm as noted above.

[00113] As illustrated in Fig. 33, tensioning structures 3 have a distance 39 between adjacent tensioning structures 3. As discussed above, strands 32 have a length 37 that approximates a height 37 of tensioning structures 3 when mattress 10 is inflated. During construction of typical mattresses using PVC tensioning structures (not shown), the height of PVC tensioning structures is practically limited by the distance between adjacent PVC tensioning structures. This limitation is the result of the typical manufacturing process wherein the PVC tensioning structures are all aligned on a lower sheet 2 and simultaneously welded to lower sheet 2. If the PVC tensioning structures are too tall, they will overlap adjacent PVC tensioning structures causing adjacent PVC tensioning structures to be welded together and resulting in dysfunctional PVC tensioning structures. To increase the height of PVC tensioning structures, the PVC tensioning structures may be folded in half along their length while one edge is being welded. By folding the PVC tensioning structure, the maximum height may be increased to slightly less than twice the distance between adjacent PVC tensioning structures (ex. 15 millimeters less than twice the height of the PVC tensioning structure). Providing more than one fold is impracticable.

[00114] Because gap portions 33 of tensioning structures 3 are made of strands 32 rather than typical PVC sheets discussed above, they are much more flexible than typical PVC tensioning structures. As a result of this flexibility, mattresses 10 can be readily manufactured having heights 37 greater than twice distance 39 between adjacent tensioning structures 3.

[00115] During manufacture, weld strips 31 of each of the plurality of tensioning structures 3 are aligned in their respective position for welding to lower sheet 1. The other weld strip 31 of these tensioning structures 3 are moved adjacent to the weld strip 31 to be welded as shown in Fig. 33. Because of their flexibility, strands 32 bunch on top of themselves or on top of nearby strands

INTEX EX. 1052, Pg. 26
Intex Recreation v. Bestway Inflatables, IPR2023-00486

32 allowing multiple layers of strands 32 to readily lie on top of one another. By allowing multiple layers of strands 32 to lie on top of each other, height 37 of tensioning structures 3 can be greater than twice distance 39 between tensioning structures 3. According to embodiments, length 37 of strands 32 may be 2, 2.5, 3, 3.5, 4, 4.5, 5, 5.5, 6 or more times longer than distance 39 between tensioning structures 3.

[00116] As shown in Fig. 33, loops 41 form in strands 32 during bunching and portions of strands 32 may be positioned under weld strip 31 that is currently not being welded. Although each strand 32 shown in Fig. 33 only has one loop 41 and is only overlapping one other strand 32, each strand 32 may have multiple loops 41 and may overlap multiple other strands 32, particularly when the distance between stands 32 along weld strips 31 is shorter than that illustrated in Fig. 33.

[00117] In addition to the bunching arrangement shown in Fig. 33 to facilitate welding of weld strips 31 to lower sheet 2, other orientations of long strands 32 can be used to prevent a portion of one tensioning structure 3 from overlapping an adjacent tensioning structure 3 during welding. For example, as shown in Fig. 35, strands may be collected in piles 43 to account for moving welds strips 31 of each tensioning structure 3 adjacent each other. The turns of piles 43 account for the decreased distance between weld strips 31 when weld strips 31 are moved together. According to another example, weld strips 31 of each tensioning structure 3 are shifted along the extent or length of tensioning structures 3 as shown in Fig. 36. The shifting results in strands 32 forming acute angles with weld strips 31 and accounts for the decreased distance between weld strips 31. By accommodating strands 32 that are longer than the distance between adjacent tensioning structures 3, tensioning structures 3 may be made taller without interfering with the process of welding tensioning structures 3 to upper and lower sheets 1, 2. As mentioned above, strands 32 may be longer than shown in Figs. 33-36. With such longer strands 32, more or larger loops 41(Fig. 33), larger and/or taller piles 43 (Fig. 35), or greater shifting (Fig. 36) may be used to accommodate the longer strands 32 to avoid tensioning structures 3 overlapping during welding.

[00118] When prepared for shipping or storage, mattresses 10 are deflated. During deflation, strands 32 may bunch as shown in Fig. 33. Further, strands 32 from adjacent tensioning structures 3 will contact each other and may become interleaved with strands 32 from one tensioning structure 3 positioned between strands 32 of another tensioning structure. Further, because strands 32 are very flexible, they collapse readily when contacted by other structures when

INTEX EX. 1052, Pg. 27
Intex Recreation v. Bestway Inflatables, IPR2023-00486

mattress 10 is deflated for shipping or storage. For example, when strands 32 contact upper or lower sheets 1, 2 when deflated, they comply to upper and lower sheets 1, 2 to allow upper and lower sheets 1, 2 to compact more closely. At least partially because of this compaction, the overall deflated volume of mattress 10 is reduced when compared to mattresses using PVC sheet tensioning structures. When collapsed, strands 32 from a tensioning structure 3 may become interleaved with strands 32 from the same tensioning structure 32, loops 41 may form, piles 43 may form, and/or strands 32 may become angled to weld strips 31 in a manner similar to that shown in Fig. 36.

[00119] As shown in Fig. 34, when collapsed, strands 32 may be oriented in different directions with some overlapping as shown in the bottom two strands 32 and other following substantially the same direction as shown in the top three strands 32. Some strands 32 collapse in directions that are not perpendicular to the extent of weld strips 31. For example, the lowest-most strand 32 in Fig. 34 leaves left-most weld strip 31 is a perpendicular direction to this weld strip 31, turns up to be parallel to this weld strip 31, returns to perpendicular to this weld strip 31, turns down to be parallel to this weld strip 31, and then loops under this weld strip 31 to attached to the other weld strip 31 in a perpendicular direction to the other weld strip 31. According to some embodiments, the overall folded or deflated volume of mattress 10 may be 8-25% less than comparable mattresses with PVC sheet tensioning structures. According to the preferred embodiment, the volume is about 16% less.

[00120] A tensioning structure in accordance with the present disclosure is also a low-cost option for imparting a desired structure and shape to an inflatable device. For example, a large reduction in PVC material may be achieved by use of the present tensioning structure, as compared to a one-piece sheet of comparable size and tensile strength.

[00121] While the disclosure has been described as having exemplary designs, the present disclosure can be further modified within the spirit and scope of this invention. This application is therefore intended to cover any variations, uses or adaptations of the disclosure using its general principles. Further, this application is intended to cover such departures from the present disclosure as come within known or customary practice in the art to which this disclosure pertains.

WHAT IS CLAIMED IS:

1. An inflatable product comprising:

a first sheet;

a second sheet disposed opposite the first sheet, the first and second sheets spaced apart to define a gap when the inflatable product is inflated; and

a tensioning structure having a gap portion spanning the gap between the first sheet and the second sheet to maintain a spatial relationship between the first and second sheets when the inflatable product is inflated, the gap portion having an extent measured along the surface of at least one of the first sheet and the second sheet, the gap portion occupying a volume and having an operable area occupied by gap portion of the tensioning structure defined as the total area of the gap between the first sheet and the second sheet, as measured along the extent of the gap portion of the tensioning structure, the gap portion of the tensioning structure defines an operable area-to-volume ratio of at least 10 square millimeters per cubic millimeter.

2. The inflatable product of claim 1, wherein the gap portion of the tensioning structure includes a plurality of strands extending between the first and second sheets.

3. The inflatable product of claim 2, wherein the plurality of strands comprises between 0.5 and 50 strands per centimeter as measured along the extent of the tensioning structure.

4. The inflatable product of claim 3, wherein the gap portion has an average thickness of less than 0.05 millimeters.

5. The inflatable product of claim 2, wherein the plurality of strands have a tensile strength equal to at least 0.2kgf/strand.

6. The inflatable product of claim 2, wherein the plurality of strands are substantially parallel to one another and define a substantially even spacing therebetween.

7. The inflatable product of claim 2, wherein the plurality of strands comprises a plurality of twisted, multifilament threads.

8. The inflatable product of claim 2, wherein the tensioning structure further includes a first weld strip affixed to one of the first sheet and the second sheet and a second weld strip disposed opposite the first weld strip and affixed to the other of the first sheet and the second sheet, and the plurality of strands is affixed to the first and second weld strips.

INTEX EX. 1052, Pg. 29
Intex Recreation v. Bestway Inflatables, IPR2023-00486

9. The inflatable product of claim 8, wherein the weld strips have a thickness between 0.1 to 1 millimeters.

10. The inflatable product of claim 8, wherein the inflatable product is an air mattress.

11. The inflatable product of claim 8, wherein the tensioning structure further comprises a weld sheet disposed in the gap between the at least two weld strips, the plurality of strands affixed to the weld sheet whereby the weld sheet maintains a desired spacing between the plurality of strands and prevents the plurality of strands from becoming entangled.

12. The inflatable product of claim 8, wherein the at least two weld strips of the tensioning structure comprises a pair of lower weld strips and an opposed pair of upper weld strips positioned to abut the pair of lower weld strips, opposing ends of the plurality of strands are captured between the pair of lower weld strips and the pair of upper weld strips.

13. The inflatable product of claim 8, wherein first and second sheets and the first and second weld strips consist of PVC sheets and the strands have a diameter less than the thickness of the first and second sheets.

14. The inflatable product of claim 8, wherein the operable area-to-volume ratio is between 25 and 1000 square millimeters per cubic millimeter.

15. The inflatable product of claim 14, wherein the operable area-to-volume ratio is between 40 and 500 square millimeters per cubic millimeter.

16. The inflatable product of claim 15, wherein the operable area-to-volume ratio is between 50 and 250 square millimeters per cubic millimeter.

17. The inflatable product of claim 1, wherein the operable area-to-volume ratio is less than 3000 square millimeters per cubic millimeter.

18. An inflatable product comprising:

a first sheet;

a second sheet disposed opposite the first sheet, the first and second sheets spaced apart to define a gap when the inflatable product is inflated; and

a tensioning structure having a gap portion spanning the gap between the first sheet and the second sheet to maintain a spatial relationship between the first and second sheets when the inflatable product is inflated, the gap portion having an extent measured along the surface of at least one of the first sheet and the second sheet, the gap portion having an operable area occupied

INTEX EX. 1052, Pg. 30
Intex Recreation v. Bestway Inflatables, IPR2023-00486

by gap portion of the tensioning structure defined as the total area of the gap between the first sheet and the second sheet, as measured along the extent of the gap portion of the tensioning structure, the gap portion of the tensioning structure having a total weight such that the tensioning structure defines an operable area-to-weight ratio of at least 6,000 square centimeters per kilogram.

19. The inflatable product of claim 18, wherein the gap portion of the tensioning structure includes a plurality of strands extending between the first and second sheets.

20. The inflatable product of claim 19, wherein the inflatable product is an air mattress.

21. The inflatable product of claim 19, wherein the tensioning structure further includes a first weld strip affixed to one of the first sheet and the second sheet and a second weld strip disposed opposite the first weld strip and affixed to the other of the first sheet and the second sheet, and the plurality of strands is affixed to the first and second weld strips.

22. The inflatable product of claim 21, wherein the plurality of strands comprises between 0.5 and 50 strands per centimeter as measured along the extent of the tensioning structure.

23. The inflatable product of claim 22, wherein the gap portion has an average thickness of less than 0.05 millimeters.

24. The inflatable product of claim 21, wherein the plurality of strands have a tensile strength equal to at least 0.2kgf/strand.

25. The inflatable product of claim 21, wherein the plurality of strands are substantially parallel to one another and define a substantially even spacing therebetween.

26. The inflatable product of claim 21, wherein the weld strips have a thickness between 0.1 to 1 millimeters.

27. The inflatable product of claim 21, wherein the tensioning structure further comprises a weld sheet disposed in the gap between the at least two weld strips, the plurality of strands affixed to the weld sheet whereby the weld sheet maintains a desired spacing between the plurality of strands and prevents the plurality of strands from becoming entangled.

28. The inflatable product of claim 21, wherein the at least two weld strips of the tensioning structure comprises a pair of lower weld strips and an opposed pair of upper weld strips positioned to abut the pair of lower weld strips, opposing ends of the plurality of strands are captured between the pair of lower weld strips and the pair of upper weld strips.

INTEX EX. 1052, Pg. 31
Intex Recreation v. Bestway Inflatables, IPR2023-00486

29. The inflatable product of claim 21, wherein first and second sheets and the first and second weld strips consist of PVC sheets and the strands have a diameter less than the thickness of the first and second sheets.

30. The inflatable product of claim 21, wherein the operable area-to-weight ratio is between 8,000 and 5,000,000 square centimeters per kilogram.

31. The inflatable product of claim 30, wherein the operable area-to-weight ratio is between 12,500 and 2,500,000 square centimeters per kilogram.

32. The inflatable product of claim 31, wherein the operable area-to-weight ratio is between 20,000 and 1,000,000 square centimeters per kilogram.

33. The inflatable product of claim 19, wherein the plurality of strands comprises a plurality of twisted, multifilament threads.

34. The inflatable product of claim 18, wherein the operable area-to- weight ratio of is less than 2,500,000 square centimeters per kilogram.

35. An inflatable product comprising:

a first sheet;

a second sheet disposed opposite the first sheet, the first and second sheets spaced apart to define a gap when the inflatable product is inflated; and

a tensioning structure having a gap portion spanning the gap between the first sheet and the second sheet to maintain a spatial relationship between the first and second sheets when the inflatable product is inflated, the gap portion of the tensioning structure having an average thickness of less than 0.125 millimeters.

36. The inflatable product of claim 35, wherein the tensioning structure includes a plurality of strands extending between the first and second sheets.

37. The inflatable product of claim 36, wherein the inflatable product is an air mattress.

38. The inflatable product of claim 36, wherein the tensioning structure further includes a first weld strip affixed to one of the first sheet and the second sheet and a second weld strip disposed opposite the first weld strip and affixed to the other of the first sheet and the second sheet, and the plurality of strands is affixed to the first and second weld strips.

39. The inflatable product of claim 38, wherein the plurality of strands comprises between 0.5 and 50 strands per centimeter as measured along the extent of the tensioning structure.

INTEX EX. 1052, Pg. 32
Intex Recreation v. Bestway Inflatables, IPR2023-00486

40. The inflatable product of claim 38, wherein the plurality of strands have a tensile strength equal to at least 0.2kgf/strand.

41. The inflatable product of claim 38, wherein the plurality of strands are substantially parallel to one another and define a substantially even spacing therebetween.

42. The inflatable product of claim 38, wherein the weld strips have a thickness between 0.1 to 1 millimeters.

43. The inflatable product of claim 38, wherein the tensioning structure further comprises a weld sheet disposed in the gap between the at least two weld strips, the plurality of strands affixed to the weld sheet whereby the weld sheet maintains a desired spacing between the plurality of strands and prevents the plurality of strands from becoming entangled.

44. The inflatable product of claim 38, wherein the at least two weld strips of the tensioning structure comprises a pair of lower weld strips and an opposed pair of upper weld strips positioned to abut the pair of lower weld strips, opposing ends of the plurality of strands are captured between the pair of lower weld strips and the pair of upper weld strips.

45. The inflatable product of claim 38, wherein first and second sheets and the first and second weld strips consist of PVC sheets and the strands have a diameter less than the thickness of the first and second sheets.

46. The inflatable product of claim 38, wherein the average thickness of the tensioning structure is between 0.0003 to 0.1 millimeters.

47. The inflatable product of claim 46, wherein the average thickness of the tensioning structure is between 0.001 to 0.05 millimeters.

48. The inflatable product of claim 47, wherein the average thickness of the tensioning structure is between 0.005 to 0.02 millimeters.

49. The inflatable product of claim 36, wherein the plurality of strands comprises a plurality of twisted, multifilament threads.

50. The inflatable product of claim 35, wherein the average thickness of the tensioning structure is less than 0.03 millimeters.

51. An inflatable product comprising:

a first sheet;

INTEX EX. 1052, Pg. 33
Intex Recreation v. Bestway Inflatables, IPR2023-00486

a second sheet disposed opposite the first sheet, the first and second sheets spaced apart to define a gap;

a tensioning structure spanning the gap between the first sheet and the second sheet, the tensioning structure comprising:

a plurality of strands uniformly spaced apart and arranged substantially parallel to one another; and

a plurality of weld strips spaced apart from one another and substantially perpendicular to the plurality of strands, each of the plurality of weld strips affixed to each of the plurality of strands, and each of the plurality of weld strips affixed to at least one of the first sheet and the second sheet.

52. The inflatable product of claim 51, wherein the plurality of weld strips comprise upper and lower weld strips disposed on opposing sides of the plurality of strands, the strands affixed to and captured between the upper and lower weld strips.

53. The inflatable product of claim 51, wherein the tensioning structure further comprises a weld sheet defining a width corresponding to an overall width of the plurality of strands, the plurality of strands affixed to the weld sheet, and at least one of the plurality of weld strips affixed to a first side of the weld sheet.

54. The inflatable product of claim 53, wherein another of the plurality of weld strips is affixed to a second side of the weld sheet opposite the first side.

55. The inflatable product of claim 53, wherein the weld sheet comprises a continuous piece of material extending across the plurality of strands.

56. The inflatable product of claim 51, wherein the tensioning structure further comprises at least one reinforcement strand disposed substantially perpendicular to the plurality of strands, the at least one reinforcement strand fixed to at least one of the plurality of weld strips.

57. The inflatable product of claim 51, wherein the plurality of strands comprise a plurality of twisted filaments.

58. An inflatable product comprising:

a first sheet;

a second sheet disposed opposite the first sheet, the first and second sheets spaced apart to define a gap;

INTEX EX. 1052, Pg. 34
Intex Recreation v. Bestway Inflatables, IPR2023-00486

a tensioning structure spanning the gap between the first sheet and the second sheet, the tensioning structure comprising:

a plurality of strands uniformly spaced apart and arranged in parallel; and

a first weld sheet having the plurality of strands affixed to an upper surface of the first weld sheet.

59. The inflatable product of claim 58, wherein the tensioning structure further comprises a second weld sheet disposed opposite the first weld sheet, the plurality of strands captured between the first and second weld sheets when the first and second weld sheets which are affixed to one another.

60. The inflatable product of claim 58, wherein the each of the plurality of strands comprise a plurality of twisted filaments, and the first weld sheet comprises a continuous piece of material extending across the plurality of strands.

61. An inflatable product comprising:

a first sheet;

a second sheet disposed opposite the first sheet, the first and second sheets spaced apart to define a gap;

a tensioning structure spanning the gap between the first sheet and the second sheet, the tensioning structure comprising:

an upper weld strip;

a lower weld strip arranged substantially parallel to the upper weld strip and spaced apart from the upper weld strip to span the gap between the first sheet and the second sheet; and

a plurality of end-to-end V-shaped strands arranged between weld strips, each of the V-shaped strands having upper and lower ends fixed to the upper and lower weld strips, respectively.

62. The inflatable product of claim 61, wherein the tensioning structure further comprises a second pair of weld strips arranged to capture the upper and lower ends of the V-shaped strands between the upper and lower weld strips and the second pair of weld strips, respectively.

INTEX EX. 1052, Pg. 35
Intex Recreation v. Bestway Inflatables, IPR2023-00486

63. The inflatable product of claim 61, wherein the tensioning structure further comprises at least one reinforcement strand disposed along a longitudinal extend of at least one of the upper and lower weld strips.

64. The inflatable product of claim 63, wherein the at least one reinforcement strand comprises a plurality of twisted filaments.

65. The inflatable product of claim 61, wherein the plurality of V-shaped strands comprise a plurality of twisted filaments.

66. The inflatable product of claim 61, wherein the upper and lower weld strips are delivered from a continuous roll of weld strip material.

67. The inflatable product of claim 61, wherein the plurality of end-to-end V-shaped strands are formed from a single, continuous strand.

68. An inflatable product comprising:

a first sheet;

a second sheet disposed opposite the first sheet, the first and second sheets spaced apart to define a gap, the first sheet and the second sheet cooperating to at least partially bound an inflatable chamber;

a plurality of tensioning structures welded to respective inner surfaces of the first and second sheets such that the plurality of tensioning structure span the gap, each of the plurality of tensioning structures comprising:

an upper weld strip affixed to one of the first sheet and the second sheet;

a lower weld strip affixed to the other of the first sheet and the second sheet; and

a plurality of strands connecting the upper and lower weld strips to one another.

69. The inflatable product of claim 68, wherein the plurality of tensioning structures further comprise at least one reinforcing strand, the reinforcing strand disposed along a longitudinal extent of at least one of the upper and lower weld strips.

70. The inflatable product of claim 68, wherein the plurality of tensioning structures are welded to the inner surfaces of the first and second sheets along a linear path, and the upper and lower weld strips define a longitudinal extent corresponding to at least one of a width of the inflatable product and a length of the inflatable product.

71. The inflatable product of claim 68, wherein the plurality of strands of the plurality

INTEX EX. 1052, Pg. 36
Intex Recreation v. Bestway Inflatables, IPR2023-00486

of tensioning structures are arranged substantially parallel to one another, with even spacing between neighboring pairs of the plurality of strands.

72. The inflatable product of claim 68, wherein the plurality of strands of the plurality of tensioning structures are arranged in a staggered, V-shaped arrangement with even intervals between respective pairs of the plurality of strands.

73. The inflatable product of claim 68, wherein at least one weld sheet is arranged between the upper and lower weld strips and along the plurality of strands, the at least one weld sheet affixed to at least a portion of the plurality of strands.

74. The inflatable product of claim 68, wherein ends of the upper and lower weld strips are connected to one another such that each of the plurality of tensioning structures forms a columnar body.

75. An inflatable product comprising:

a first sheet;

a second sheet disposed opposite the first sheet, the first and second sheets spaced apart to define a gap, the first sheet and the second sheet cooperating to at least partially bound an inflatable chamber;

a plurality of tensioning structures welded to inner surfaces of the first and second sheets such that the plurality of tensioning structures span the gap, each of the plurality of tensioning structures comprising:

a weld sheet;

a plurality of strands, and the plurality of strands substantially evenly spaced and arranged substantially parallel to one another, the plurality of strands affixed to the weld sheet; and

a weld strip affixed to each end of the weld sheet such that a longitudinal extent of the weld strip is substantially perpendicular to the plurality of strands, respective ends of the plurality of strands are affixed to the weld strip, and each of the weld strips are welded to one of the first sheet and the second sheet.

76. The inflatable product of claim 75, wherein the plurality of tensioning structures further comprise at least one reinforcing strand, the reinforcing strand disposed along the longitudinal extent of the weld strip.

77. The inflatable product of claim 75, wherein the plurality of tensioning structures

INTEX EX. 1052, Pg. 37
Intex Recreation v. Bestway Inflatables, IPR2023-00486

are welded to the inner surfaces of the first and second sheets along a linear path.

78. The inflatable product of claim 75, wherein ends of the weld strip are connected to one another such that each of the plurality of tensioning structures forms a columnar body.

79. A method for producing a tensioning structure of an inflatable product, the method comprising:

arranging at least one of a welder and an adhesive device downstream of a strand guide;

supplying a plurality of strands to the welder or the adhesive device via the strand guide, such that the supplied strands are substantially uniformly spaced apart and arranged substantially parallel to one another;

positioning weld strips on a first die of the welder or gluing device, the weld strips having a longitudinal extent corresponding to an overall width of the plurality of strands;

advancing a second die of the welder or gluing device into an operable position in which the first and second dies are disposed at opposing sides of the weld strips,

activating the welder or gluing device to fixedly connect the weld strips to the plurality of strands, such that the weld strips are affixed to the plurality of strands in a spaced apart and substantially parallel arrangement, and such that the weld strips are substantially perpendicular to the plurality of strands.

80. The method of claim 79, wherein the steps of supplying, positioning, advancing and activating result in creation of bulk material suitable for producing a plurality of the tensioning structures.

81. The method of claim 80, further comprising delivering the bulk material to a take-up device.

82. The method of claim 79, wherein the steps of supplying a plurality of strands comprises continuously delivering the plurality of strands to the welder.

83. The method of claim 79, further comprising:

arranging at least one reinforcement strand substantially perpendicular to the plurality of strands and along the longitudinal extent of the respective weld strips, the step of arranging at least one reinforcement strand before the step of advancing a second die; and

fixedly connecting the at least one reinforcement strand to at least one of the weld strips.

INTEX EX. 1052, Pg. 38
Intex Recreation v. Bestway Inflatables, IPR2023-00486

84. The method of claim 83, wherein the step of fixedly connecting occurs during the step of activating the welder.

85. A method for producing a tensioning structure of an inflatable product comprises:

arranging a hot roller downstream of a strand guide;

supplying a plurality of strands to the hot roller via the strand guide, such that the supplied strands are substantially uniformly spaced apart and arranged substantially parallel to one another;

arranging a conveying roller downstream of the strand guide, the conveying roller operable to deliver at least one weld sheet to the hot roller, the at least one weld sheet having a width corresponding to an overall width of the plurality of strands; and

passing the plurality of strands and the at least one weld sheet through the hot roller, such that the plurality of strands become affixed to the at least one weld sheet.

86. The method of claim 85, wherein the steps of supplying and passing result in creation of bulk material suitable for producing a plurality of the tensioning structures, the method further comprising:

delivering the bulk material to a take-up device.

87. The method of claim 85, further comprising the steps of:

arranging one of a welder and an adhesive device downstream of the strand guide;

supplying the plurality of strands to the welder or the adhesive device;

positioning weld strips on a first die of the welder or gluing device;

advancing a second die of the welder or gluing device into an operable position in which the first and second dies are disposed at opposing sides of the weld strips,

activating the welder or gluing device to fixedly connect the weld strips to at least one of the plurality of strands and the at least one weld sheet, such that the weld strips are affixed to the at least one of the plurality of strands and the at least one weld sheet in a spaced apart and substantially parallel arrangement, and such that the weld strips are substantially perpendicular to the plurality of strands.

88. The method of claim 87, further comprising:

arranging at least one reinforcement strand substantially perpendicular to the plurality of strands and along a longitudinal extent of the respective weld strips, the step of arranging at least one reinforcement strand before the step of advancing a second die; and

INTEX EX. 1052, Pg. 39
Intex Recreation v. Bestway Inflatables, IPR2023-00486

fixedly connecting the at least one reinforcement strand to at least one of the weld strips.

89. A method for producing a tensioning structure, the method comprising:

arranging a first pair of weld strips parallel to one another on a joining device;

wrapping at least one continuous strand around a plurality of members arranged along a pair of rows adjacent the first pair of weld strips, respectively, each of the pair of rows of members offset with respect to the other of the pair of rows of members,

the step of wrapping comprising alternating between the pair of rows, such that the at least one continuous strand forms a plurality of end-to-end V-shaped strands; and

using the joining device to join the first pair of weld strips to the plurality of strands at respective V-shaped corners formed by the at least one continuous strand, such that the tensioning structure has a tensile strength along a direction perpendicular to a longitudinal extent of the first pair of weld strips.

90. The method of claim 89, further comprising the step of:

arranging a second pair of weld strips in abutting relationship with the first pair of weld strips, the step of arranging after the step of wrapping such that respective V-shaped corners of the at least one continuous strand are clamped interposed between the first pair of weld strips and the second pair of weld strips prior to the step of using the joining device.

91. The method of claim 90, further comprising placing at least one reinforcement strand between at least one of the first pair of weld strips and a respective abutting one of the second pair of weld strips, such that the at least one reinforcement strand extends along the longitudinal extent the at least one of the first pair of weld strips.

92. The method of claim 89, wherein the joining device comprises at least one of a high frequency welder, a thermofusion device, an adhesive device, or a sewing machine.

93. The method of claim 89, wherein the plurality of members are uniformly spaced along each of the pair of rows, respectively, and the plurality of members arranged near outer edges of the first pair of weld strips.

94. The method of claim 89, wherein the members are hook-shaped.

95. An inflatable product comprising:

a first sheet;

INTEX EX. 1052, Pg. 40
Intex Recreation v. Bestway Inflatables, IPR2023-00486

a second sheet disposed opposite the first sheet, the first and second sheets spaced apart to define a gap when the inflatable product is inflated; and

a plurality of tensioning structures positioned to maintain a spatial relationship between the first and second sheets when the inflatable product is inflated, each of the tensioning structures having a first weld attaching the tensioning structure to the first sheet and a second weld strip attaching the tensioning structure to the second sheet, the first and second welds being separated by a distance greater than twice the distance between adjacent tensioning structures when the inflatable product is operably inflated.

96. The inflatable product of claim 95, wherein the tensioning structures include a plurality of strands extending between the first and second welds.

97. The inflatable product of claim 96, wherein the tensioning structures include weld strips including the first and second welds and the weld strips and first and second sheets are made of the same material type.

98. An inflatable product comprising:

a first sheet;

a second sheet disposed opposite the first sheet, the first and second sheets spaced apart to define a gap when the inflatable product is inflated; and

a plurality of tensioning structures positioned to maintain a spatial relationship between the first and second sheets when the inflatable product is inflated, each of the tensioning structures having a gap portion extending between the first and second sheets having a uniform thickness, the first and second sheets being separated by a distance greater than twice the distance between adjacent tensioning structures when the inflatable product is operably inflated.

99. The inflatable product of claim 98, wherein the tensioning structures include a plurality of strands extending between the first and second sheets.

100. The inflatable product of claim 99, wherein the tensioning structures include weld strips including welds attached to the first and second sheets and the weld strips and first and second sheets are made of a like material.

101. An inflatable product comprising:

a first sheet;

INTEX EX. 1052, Pg. 41
Intex Recreation v. Bestway Inflatables, IPR2023-00486

a second sheet disposed opposite the first sheet, the first and second sheets spaced apart to define a gap when the inflatable product is inflated; and

a plurality of tensioning structures positioned to maintain a spatial relationship between the first and second sheets when the inflatable product is inflated, the tensioning structures being interleaved with each other when the inflatable product is deflated.

102. The inflatable product of claim 101, wherein the tensioning structures include a plurality of strands extending between the first and second sheets.

103. The inflatable product of claim 102, wherein the tensioning structures include weld strips including welds attached to the first and second sheets and the weld strips and first and second sheets are made of a like material.

INTEX EX. 1052, Pg. 42
Intex Recreation v. Bestway Inflatables, IPR2023-00486

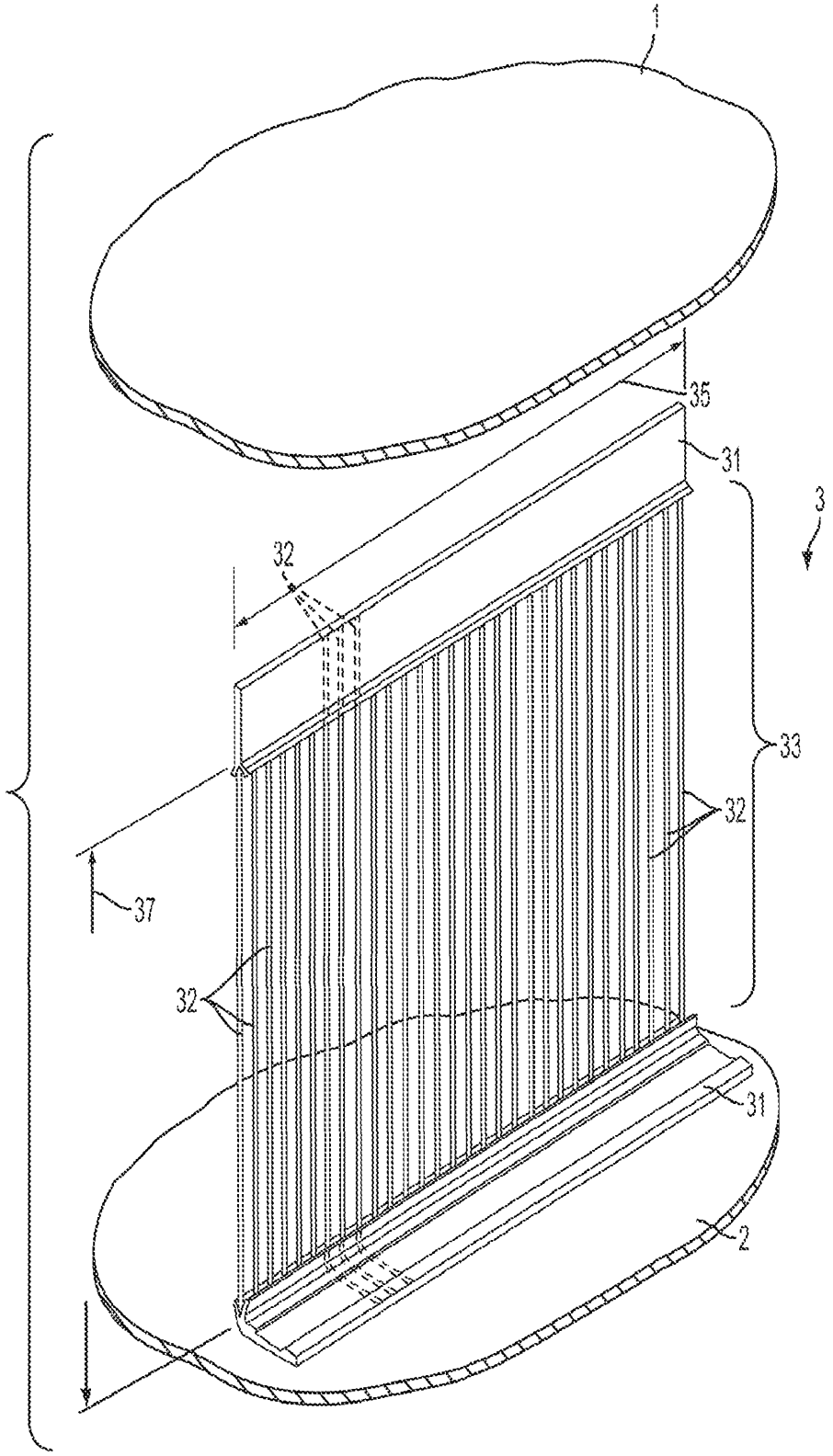

FIG. 1

INTEX EX. 1052, Pg. 43
Intex Recreation v. Bestway Inflatables, IPR2023-00486

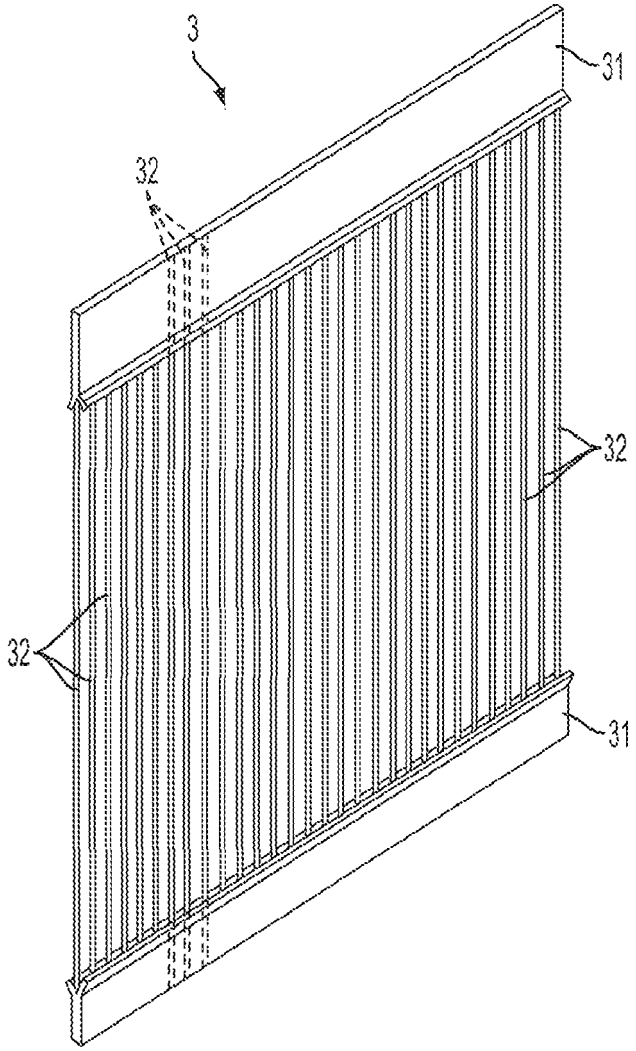

FIG. 2

INTEX EX. 1052, Pg. 44
Intex Recreation v. Bestway Inflatables, IPR2023-00486

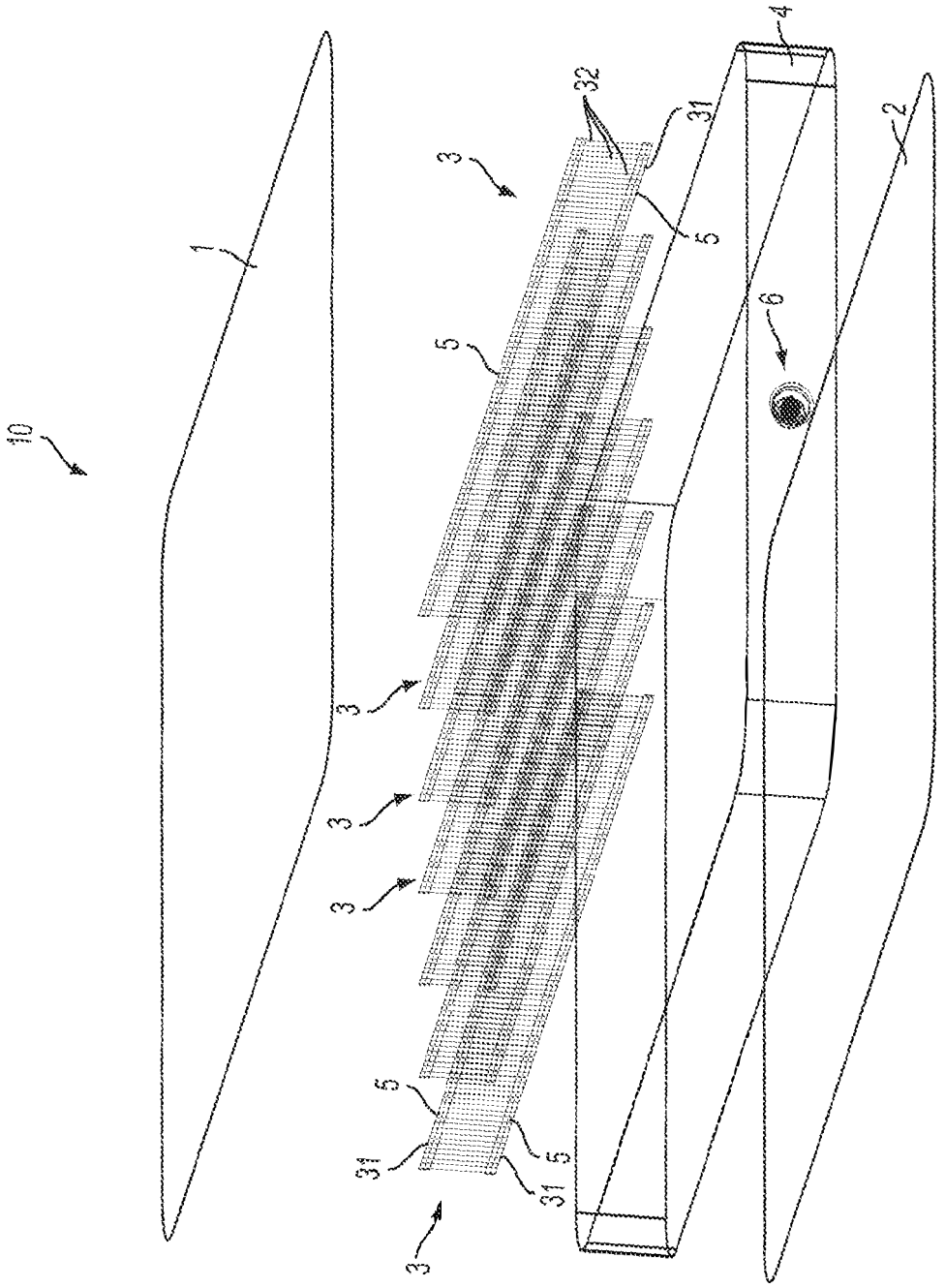

FIG. 3

INTEX EX. 1052, Pg. 45
Intex Recreation v. Bestway Inflatables, IPR2023-00486

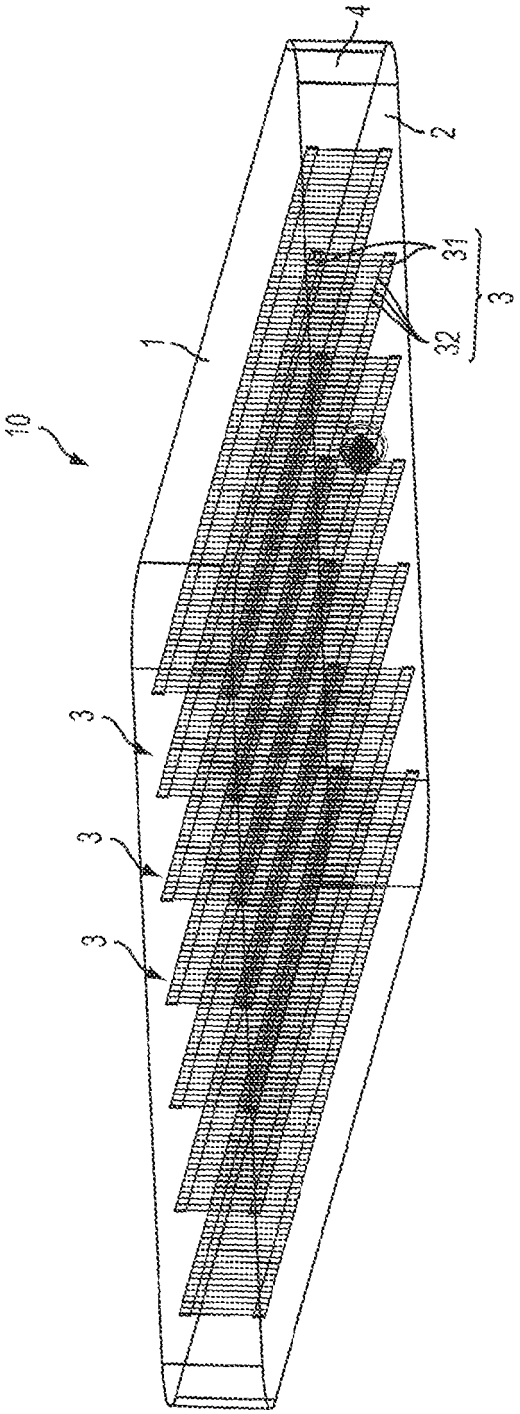

FIG. 4

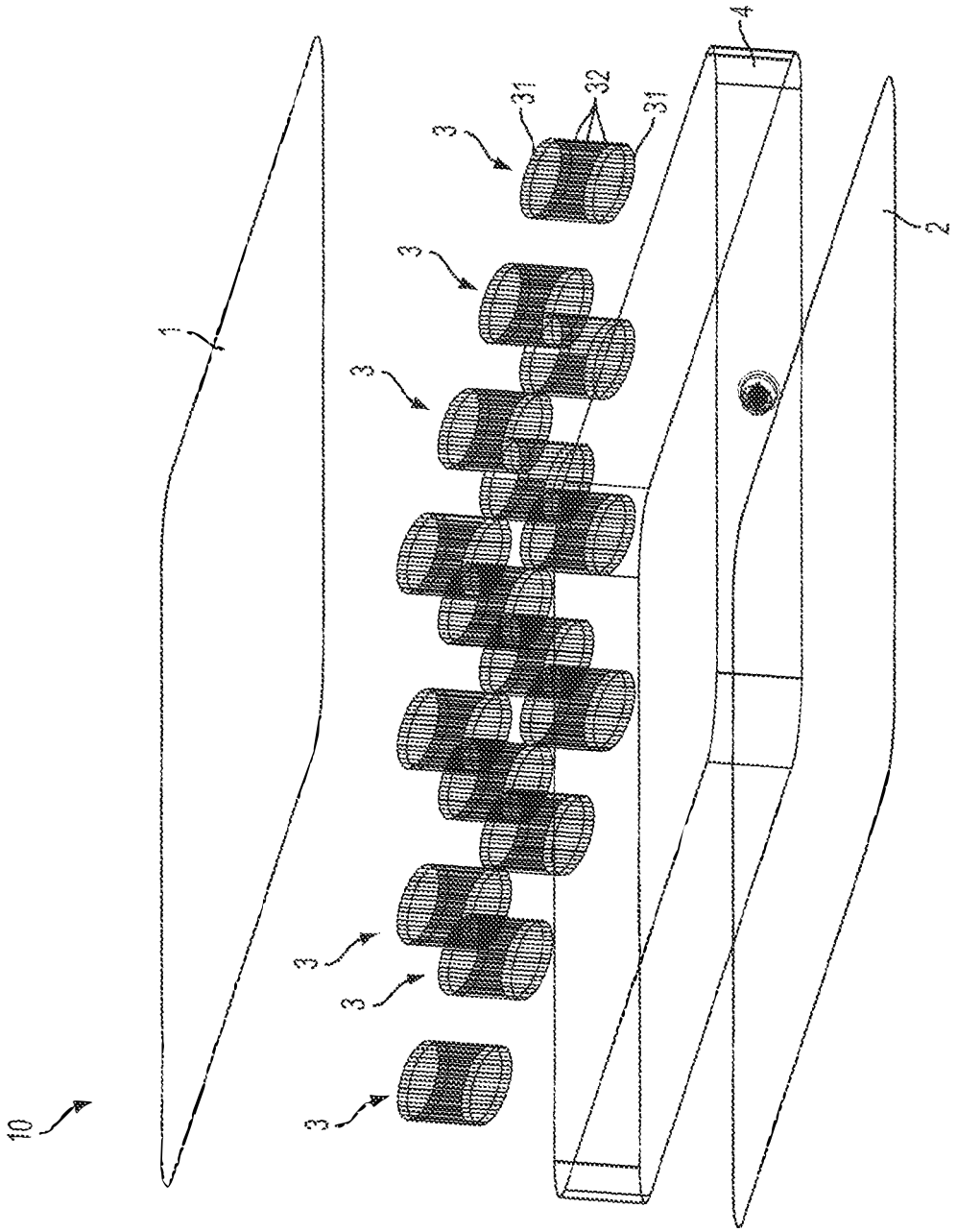

FIG. 5

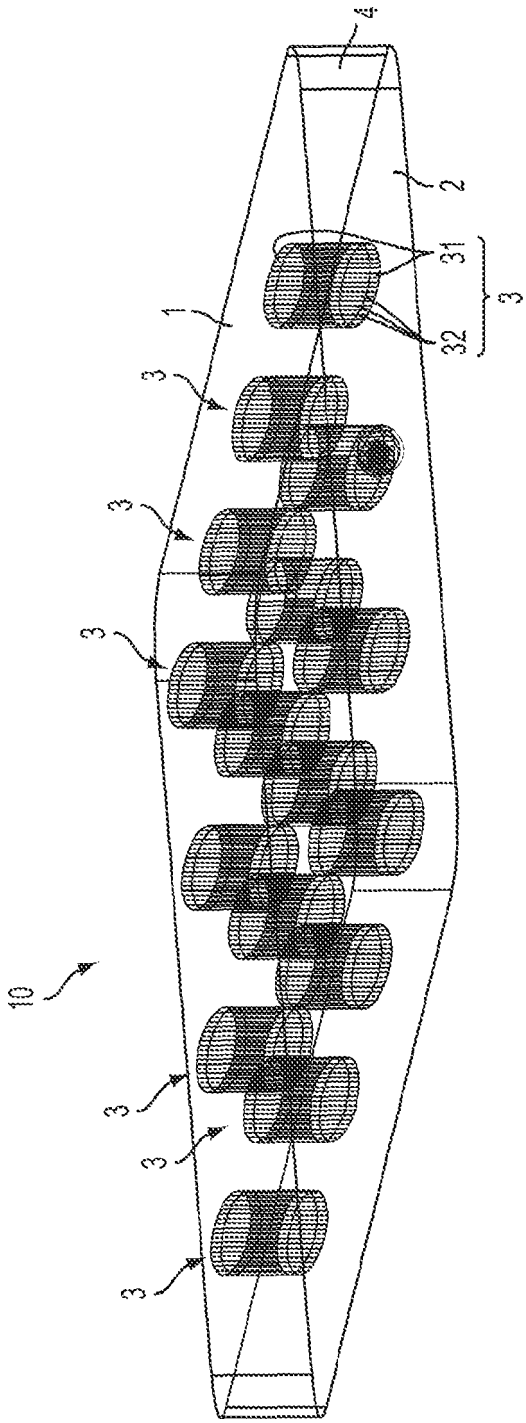

FIG. 6

INTEX EX. 1052, Pg. 48
Intex Recreation v. Bestway Inflatables, IPR2023-00486

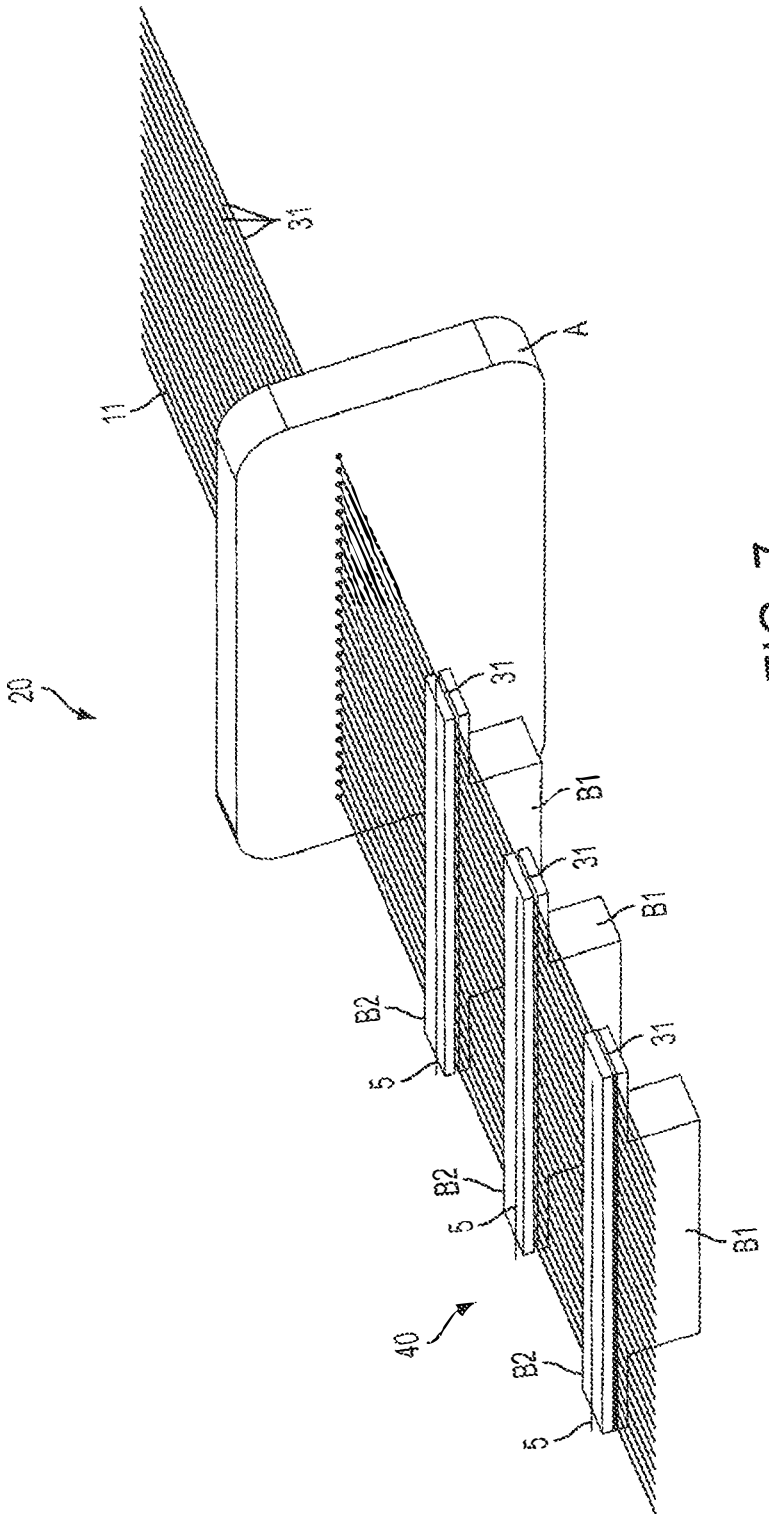

FIG. 7

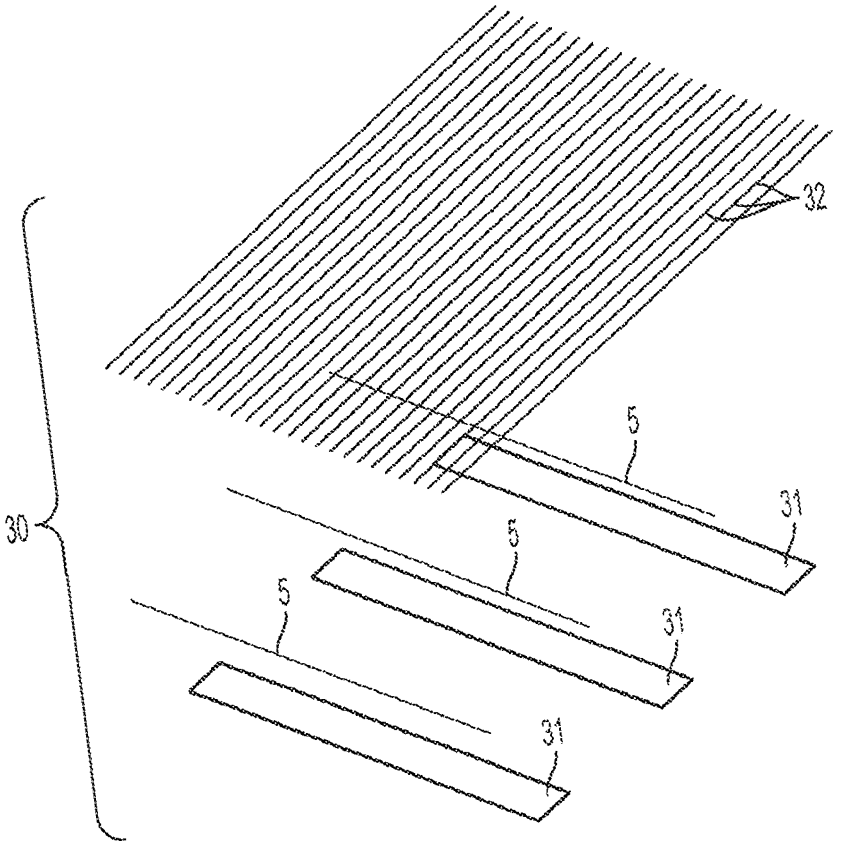

FIG. 8

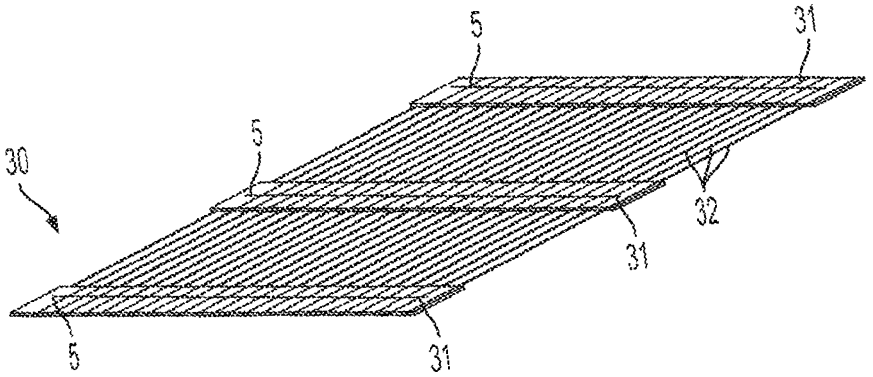

FIG. 9

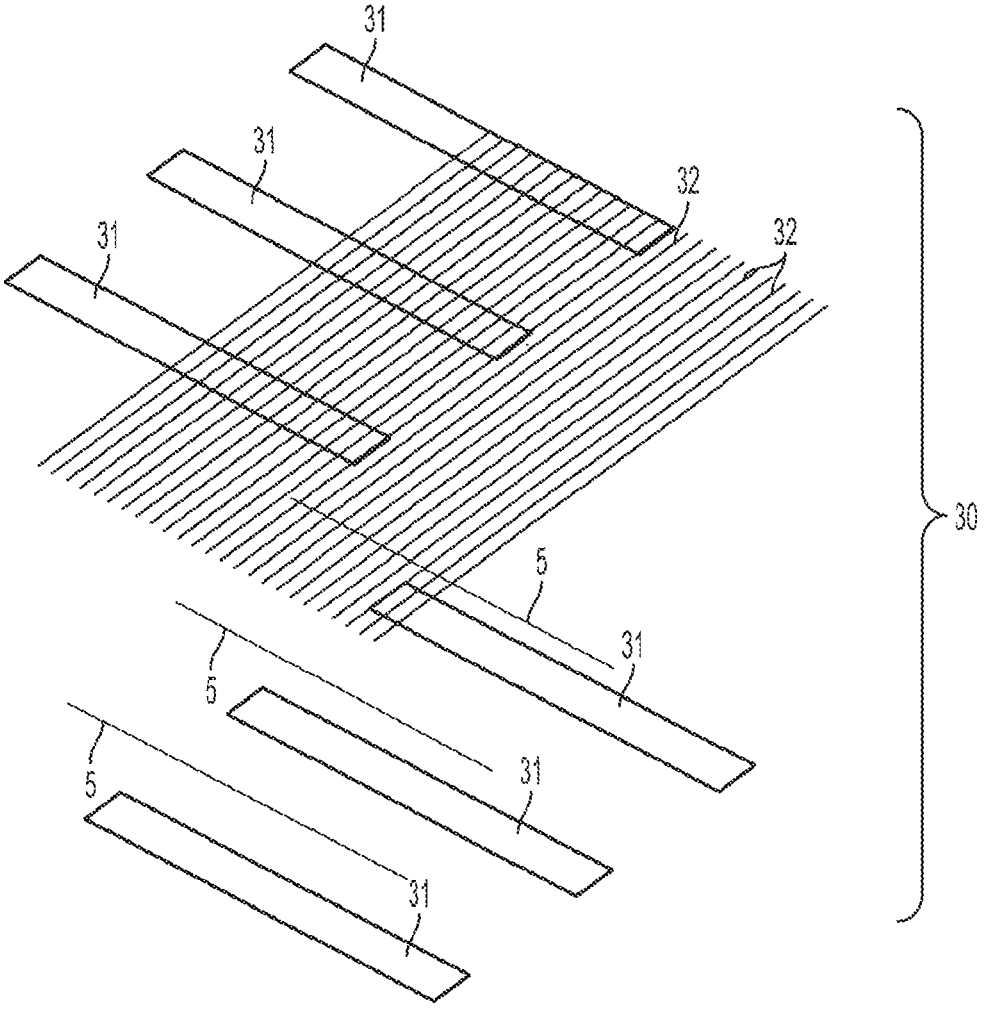

FIG. 10

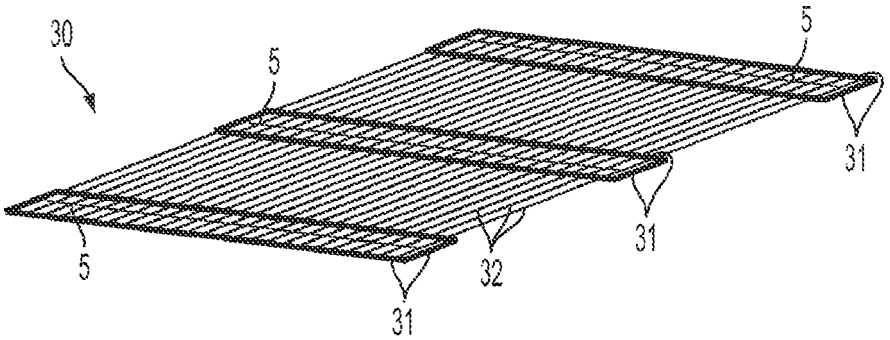

FIG. 11

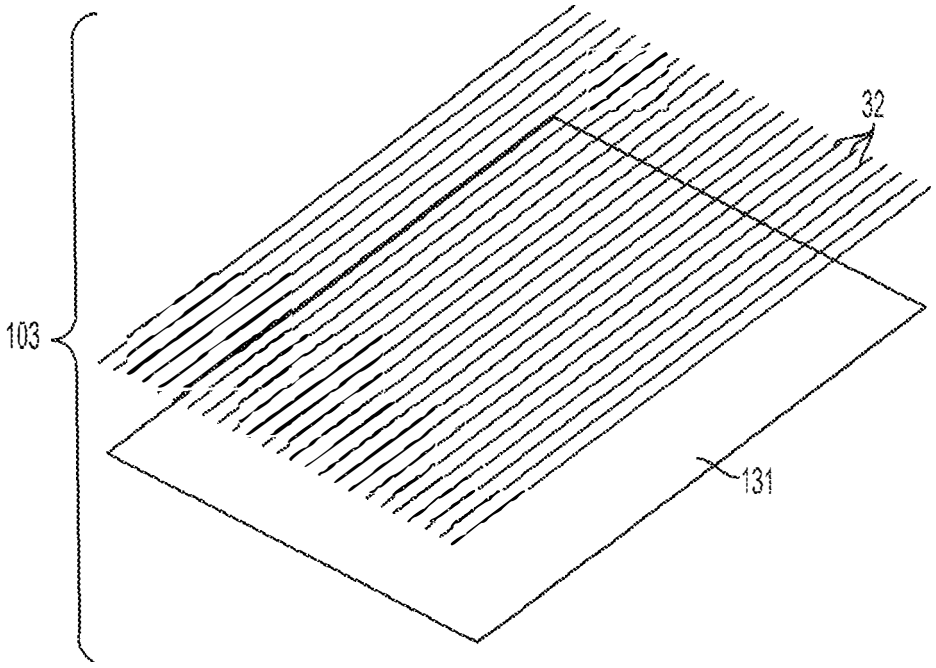

FIG. 12

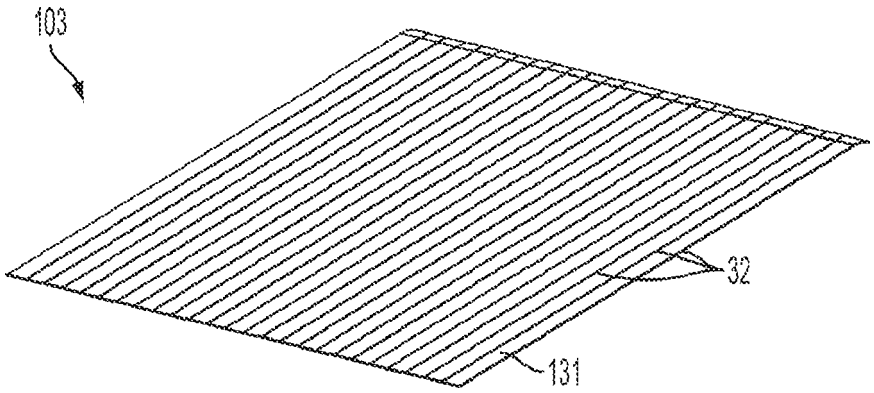

FIG. 13

INTEX EX. 1052, Pg. 52
Intex Recreation v. Bestway Inflatables, IPR2023-00486

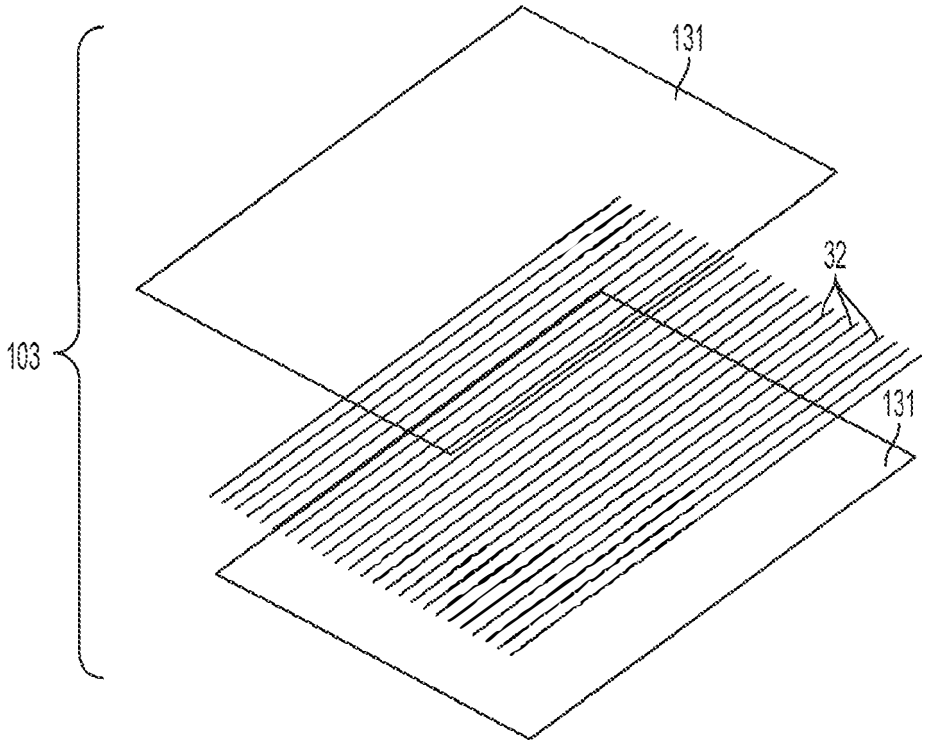

FIG. 14

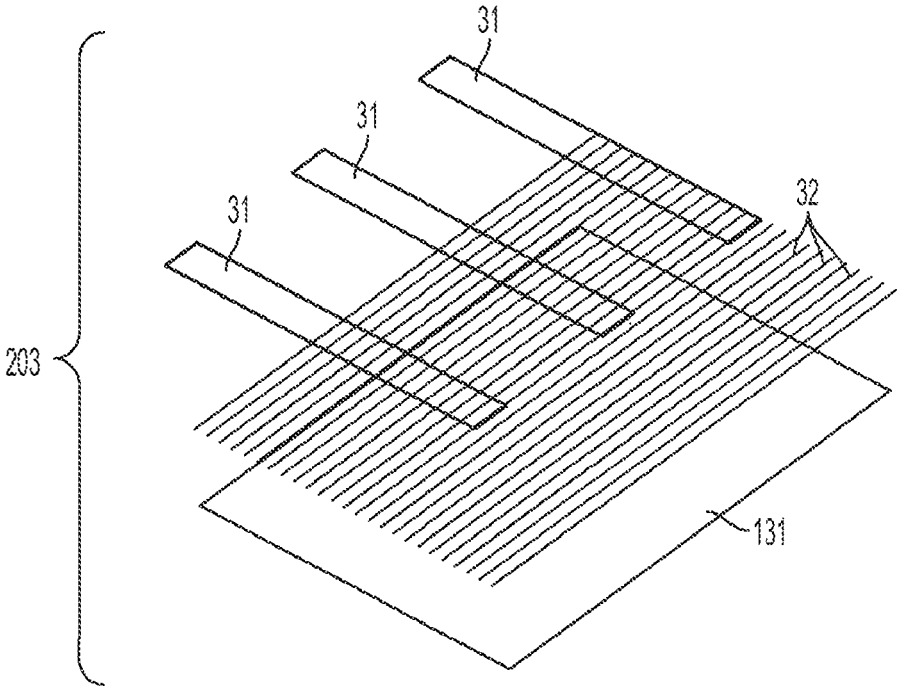

FIG. 15

INTEX EX. 1052, Pg. 53
Intex Recreation v. Bestway Inflatables, IPR2023-00486

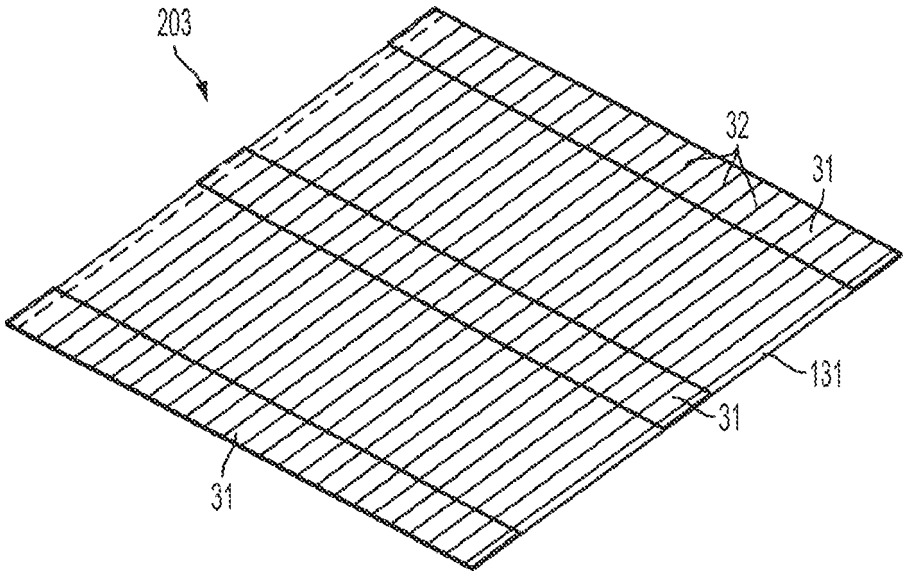

FIG. 16

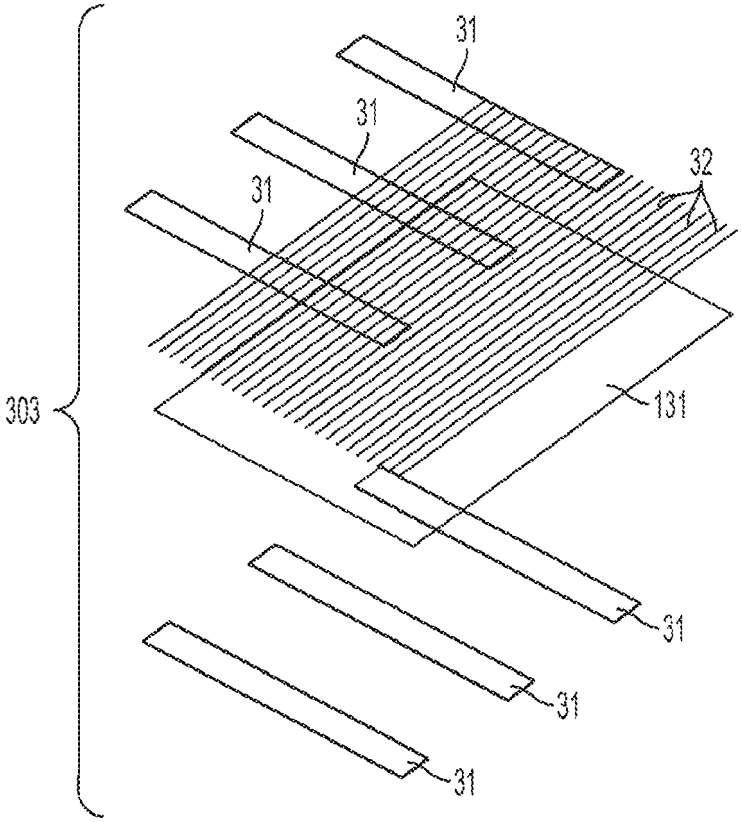

FIG. 17

INTEX EX. 1052, Pg. 54
Intex Recreation v. Bestway Inflatables, IPR2023-00486

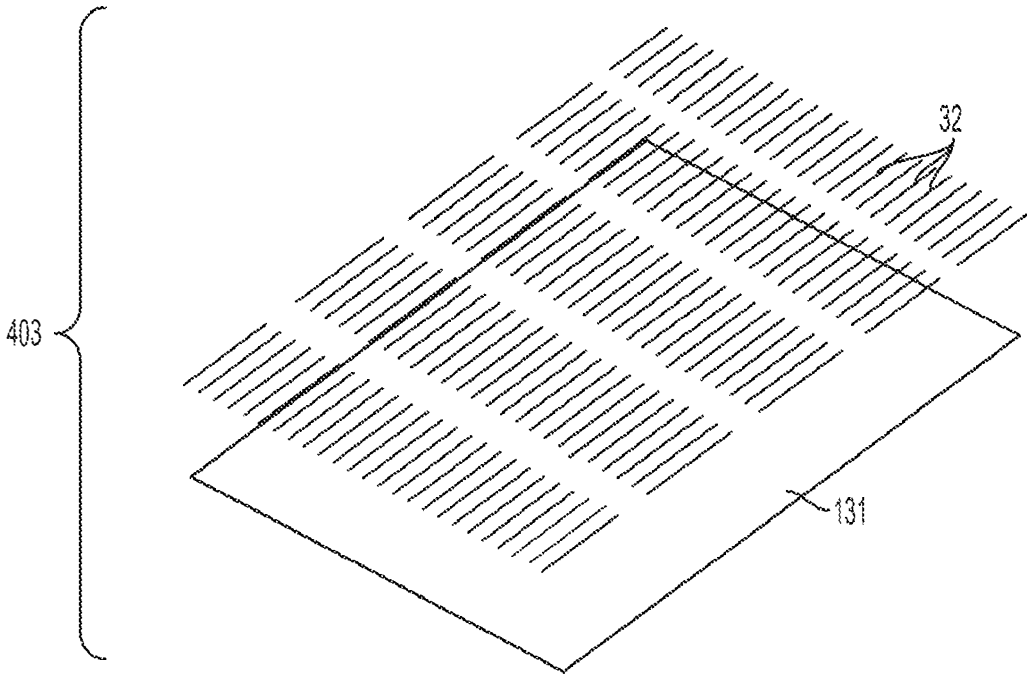

FIG. 18

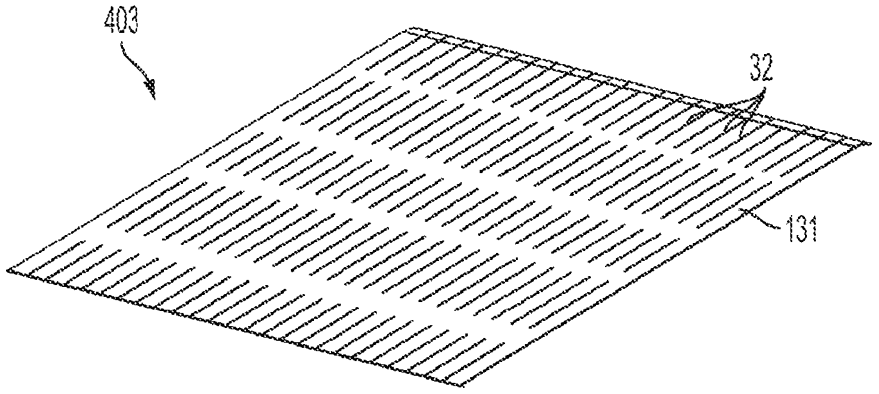

FIG. 19

INTEX EX. 1052, Pg. 55
Intex Recreation v. Bestway Inflatables, IPR2023-00486

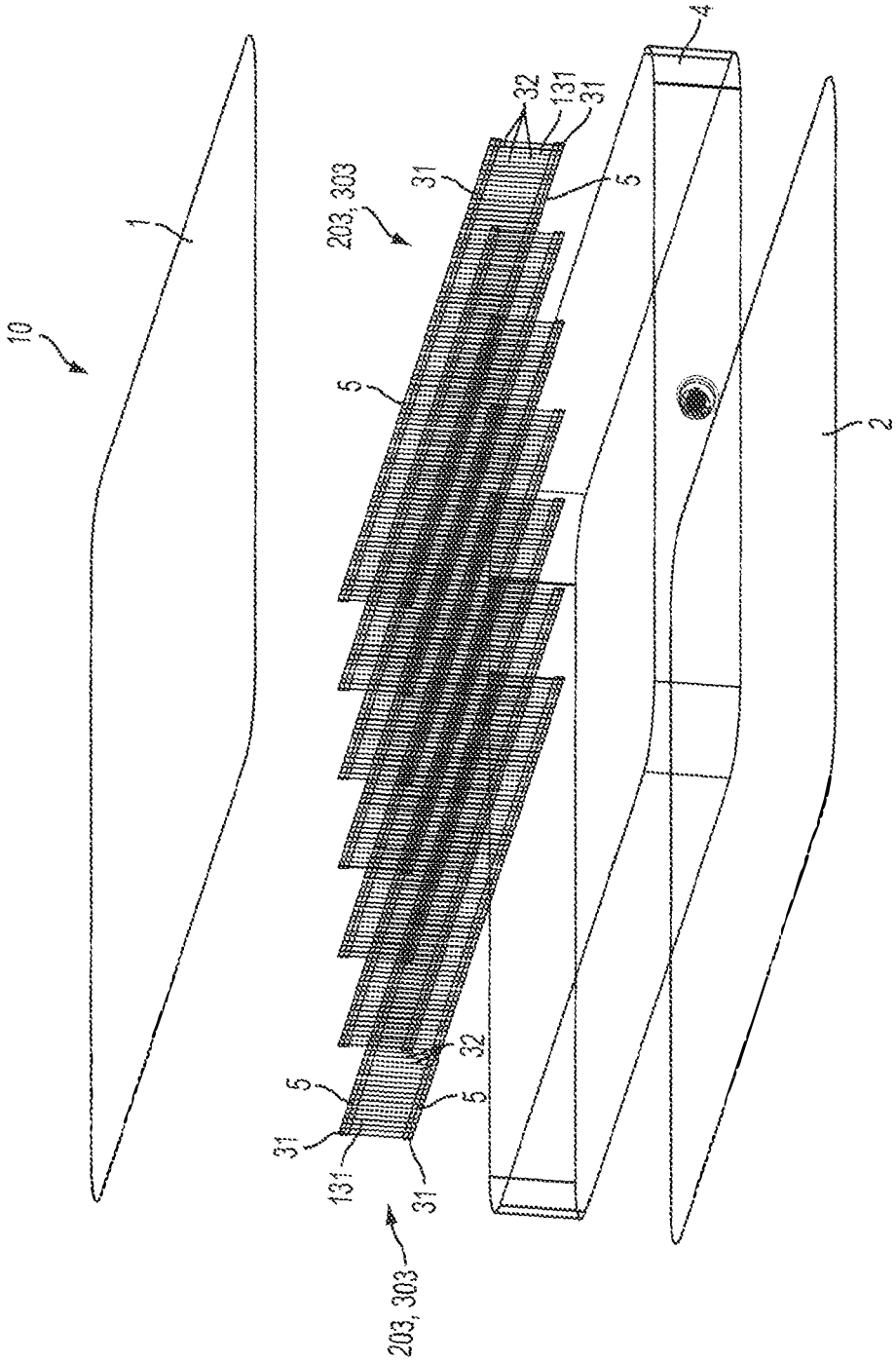

FIG. 20

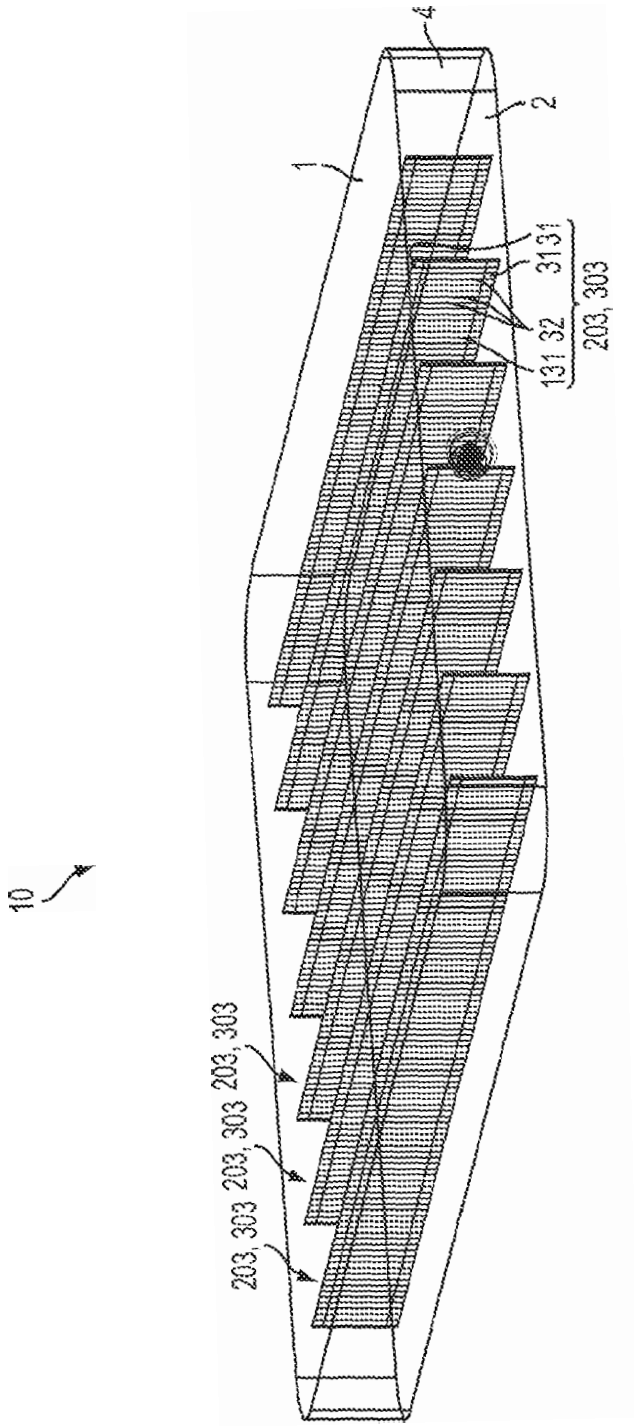

FIG. 21

INTEX EX. 1052, Pg. 57
Intex Recreation v. Bestway Inflatables, IPR2023-00486

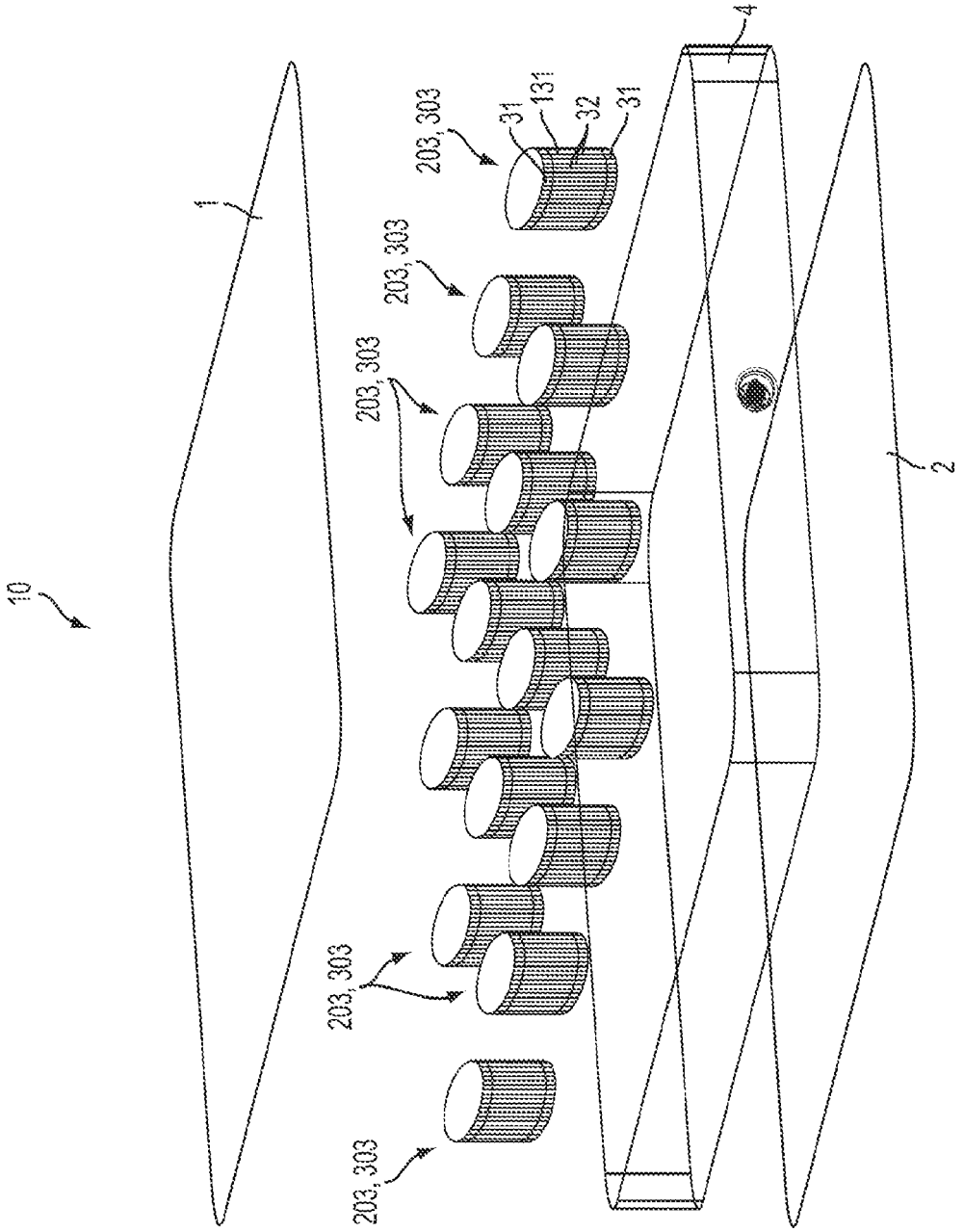

FIG. 22

INTEX EX. 1052, Pg. 58
Intex Recreation v. Bestway Inflatables, IPR2023-00486

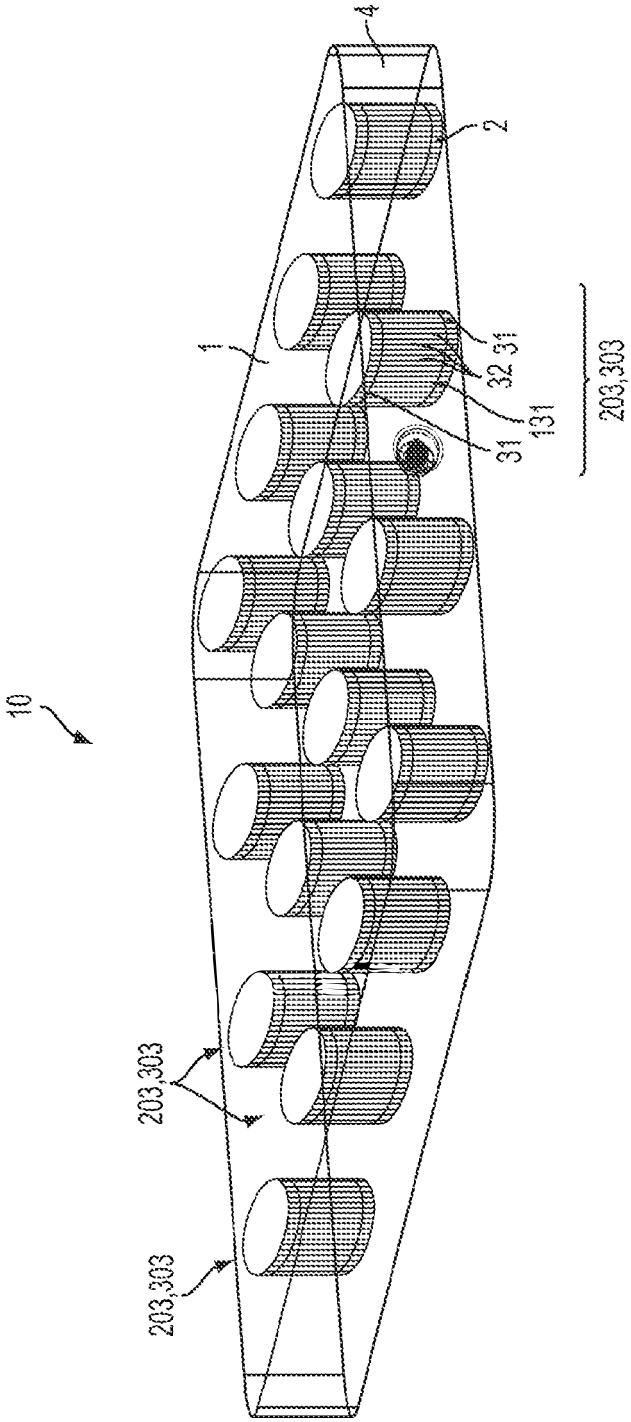

FIG. 23

INTEX EX. 1052, Pg. 59
Intex Recreation v. Bestway Inflatables, IPR2023-00486

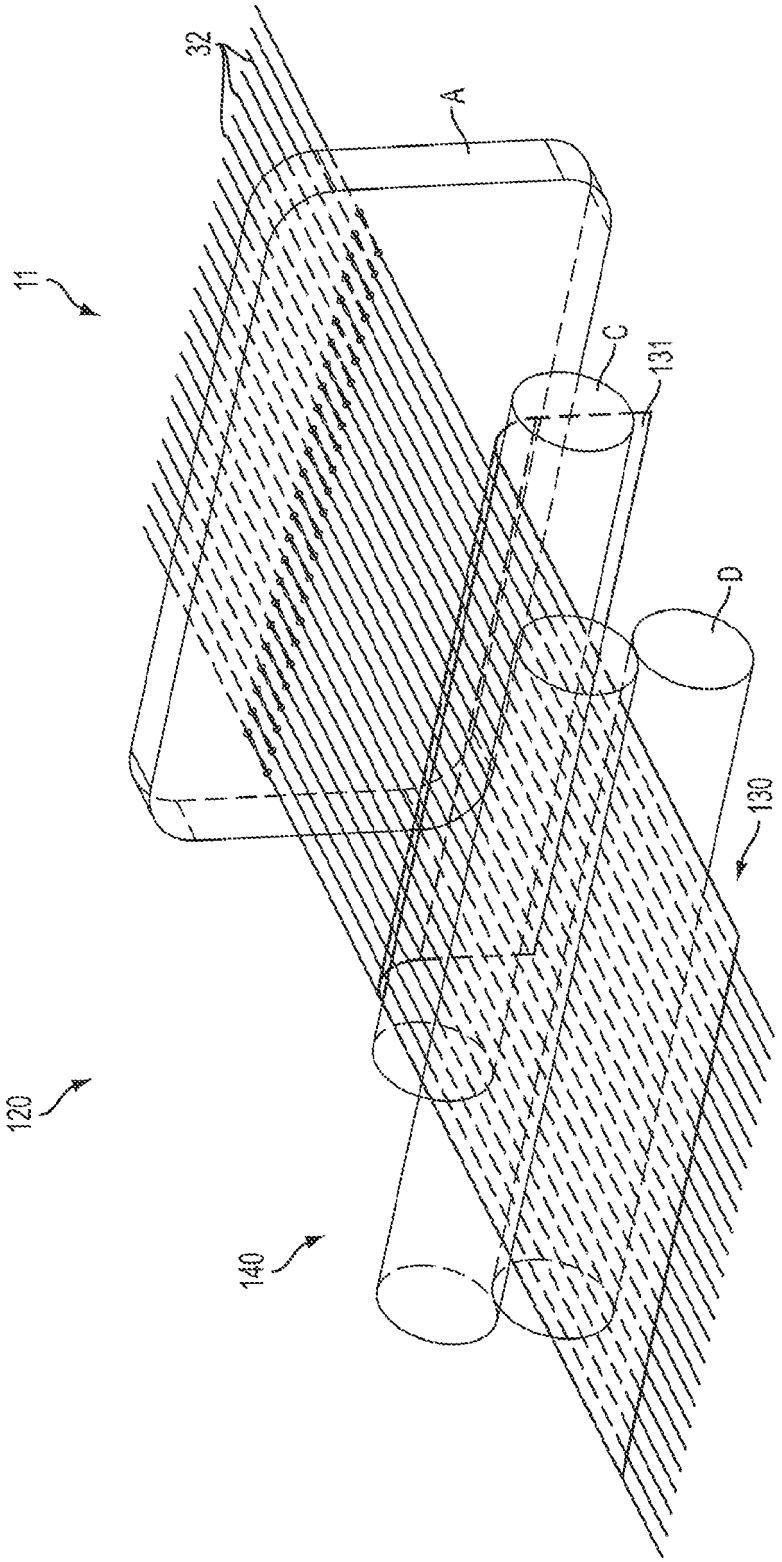

FIG. 24

INTEX EX. 1052, Pg. 60
Intex Recreation v. Bestway Inflatables, IPR2023-00486

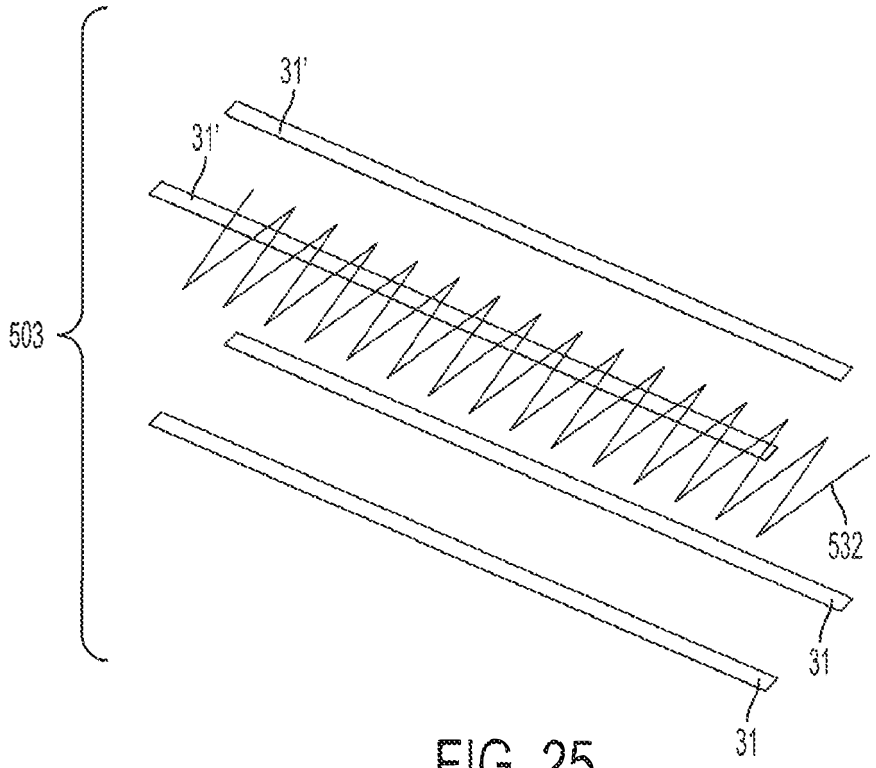

FIG. 25

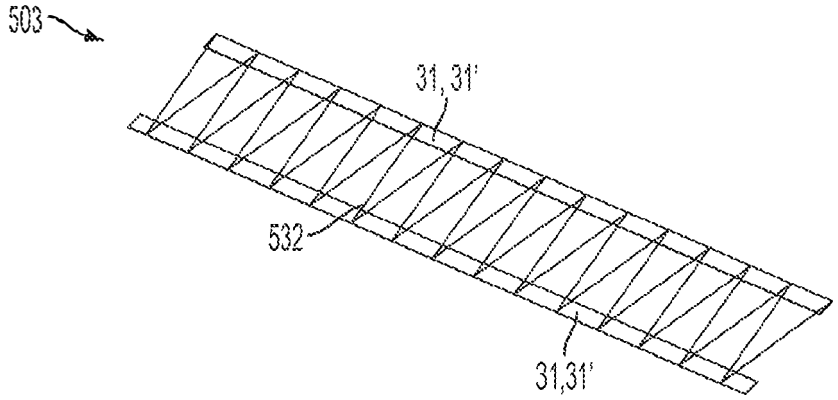

FIG. 26

INTEX EX. 1052, Pg. 61
Intex Recreation v. Bestway Inflatables, IPR2023-00486

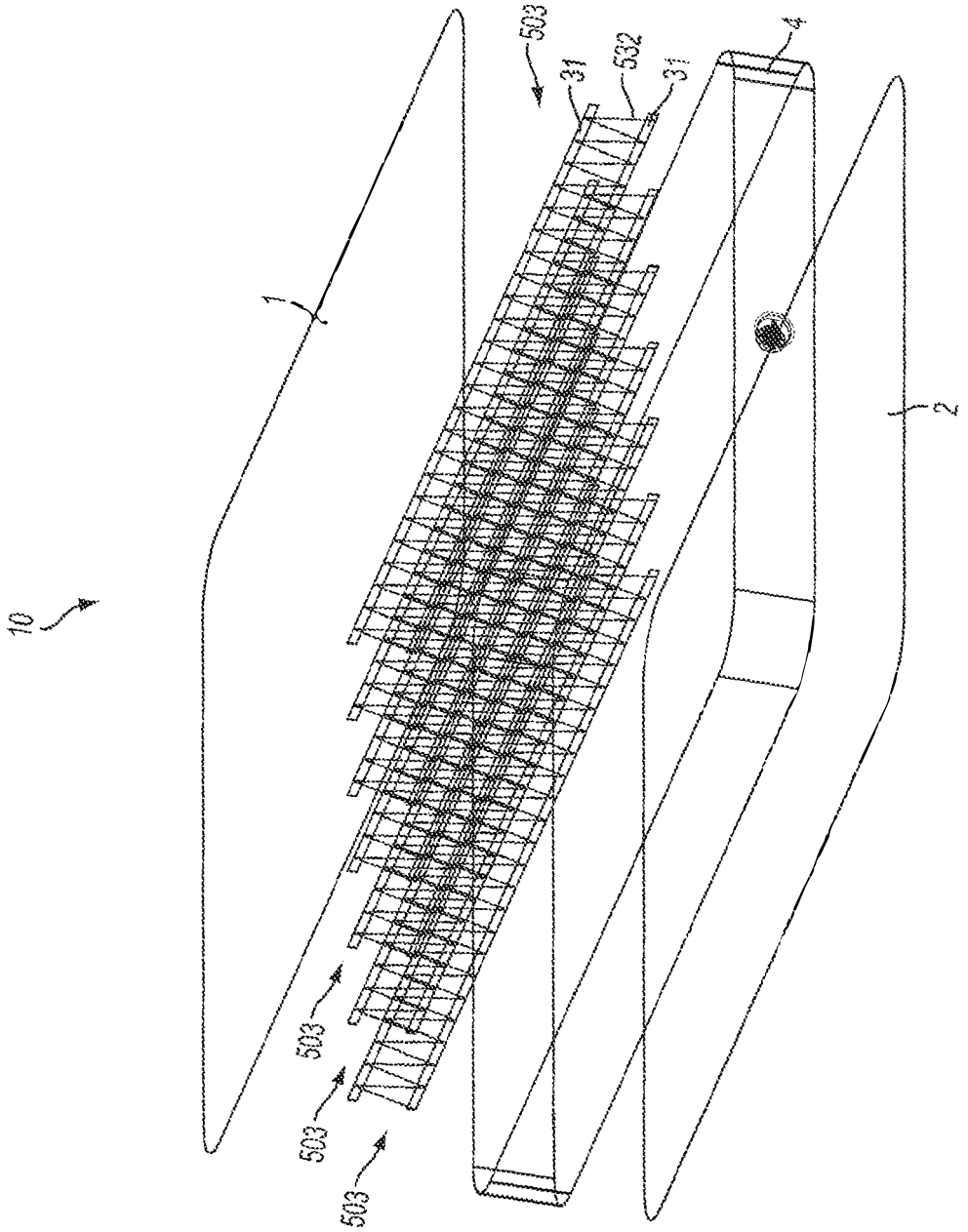

FIG. 27

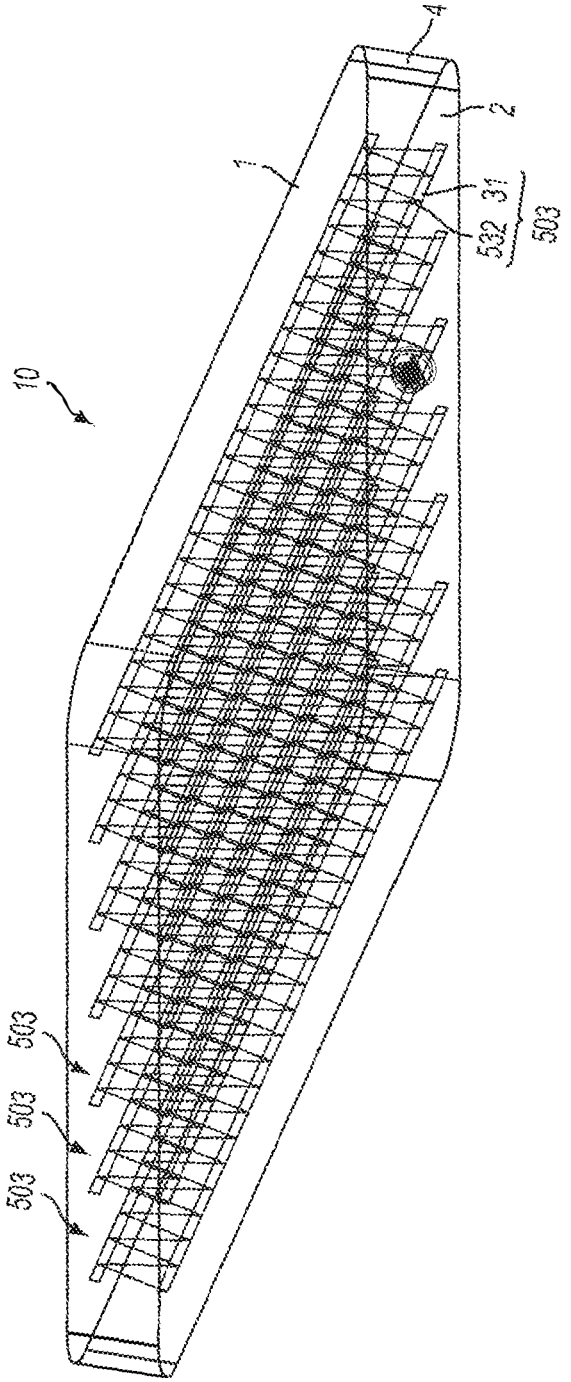

FIG. 28

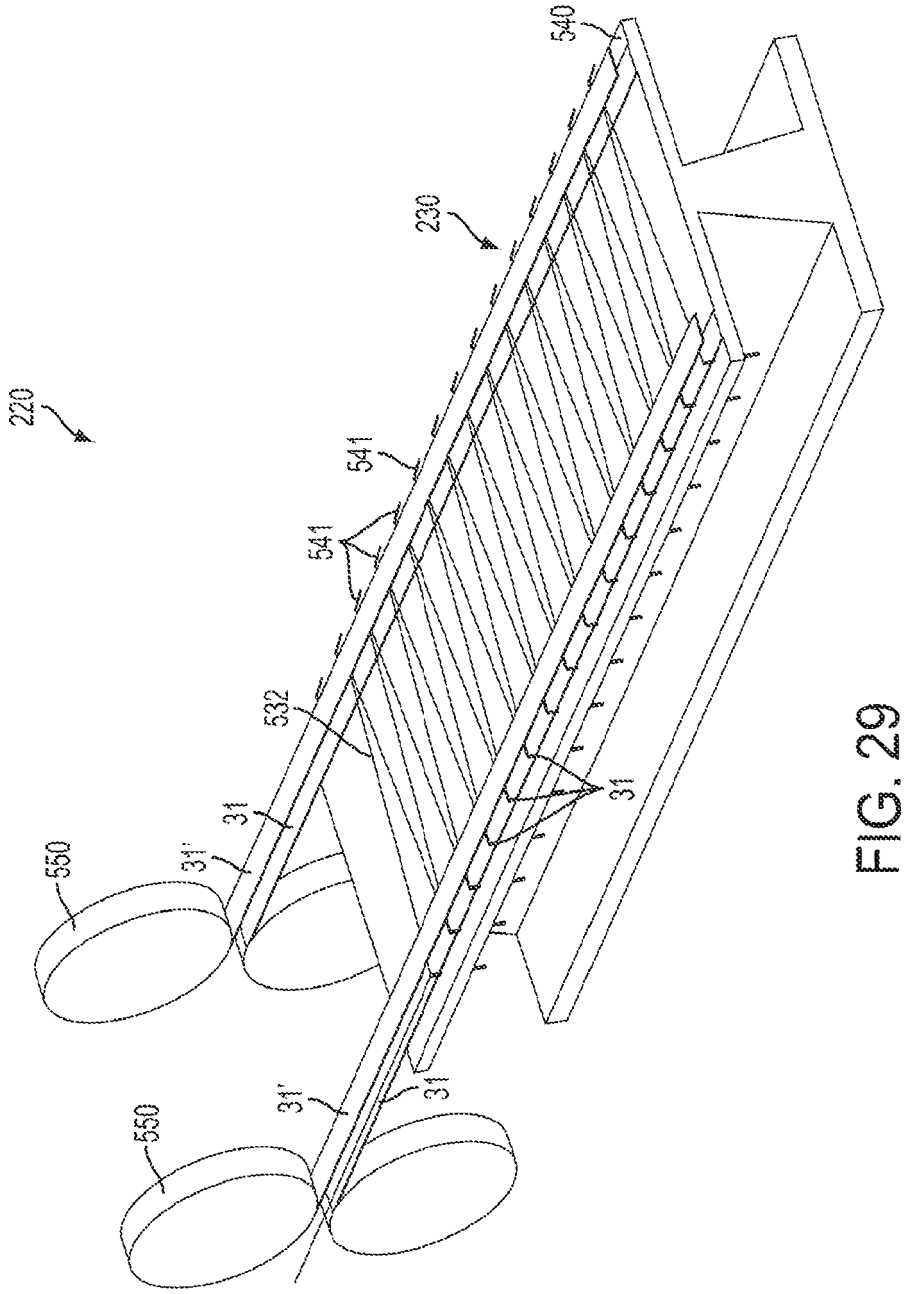

FIG. 29

INTEX EX. 1052, Pg. 64
Intex Recreation v. Bestway Inflatables, IPR2023-00486

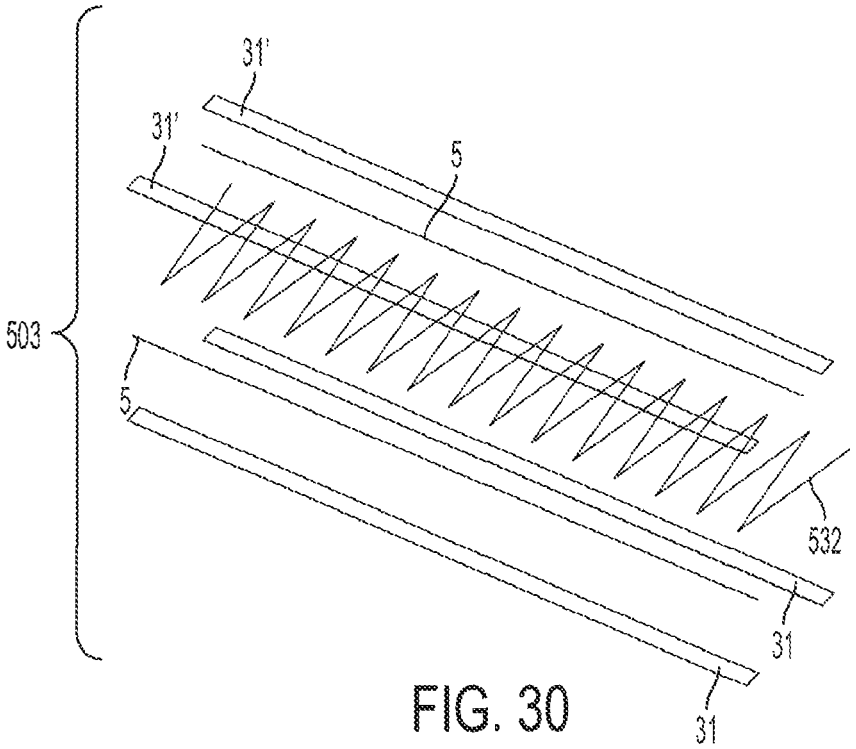

FIG. 30

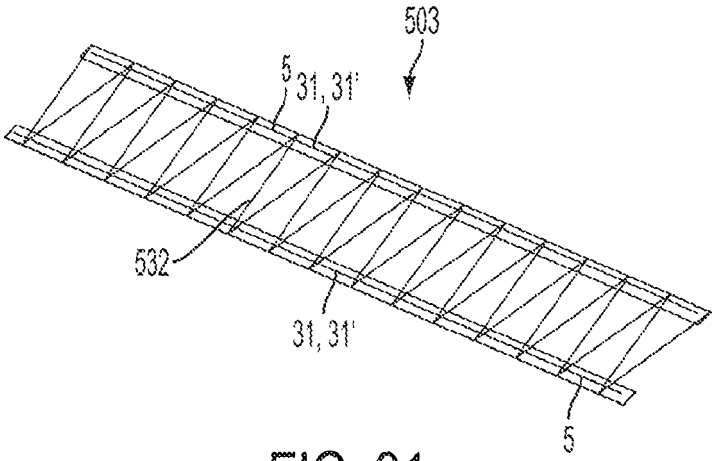

FIG. 31

INTEX EX. 1052, Pg. 65
Intex Recreation v. Bestway Inflatables, IPR2023-00486

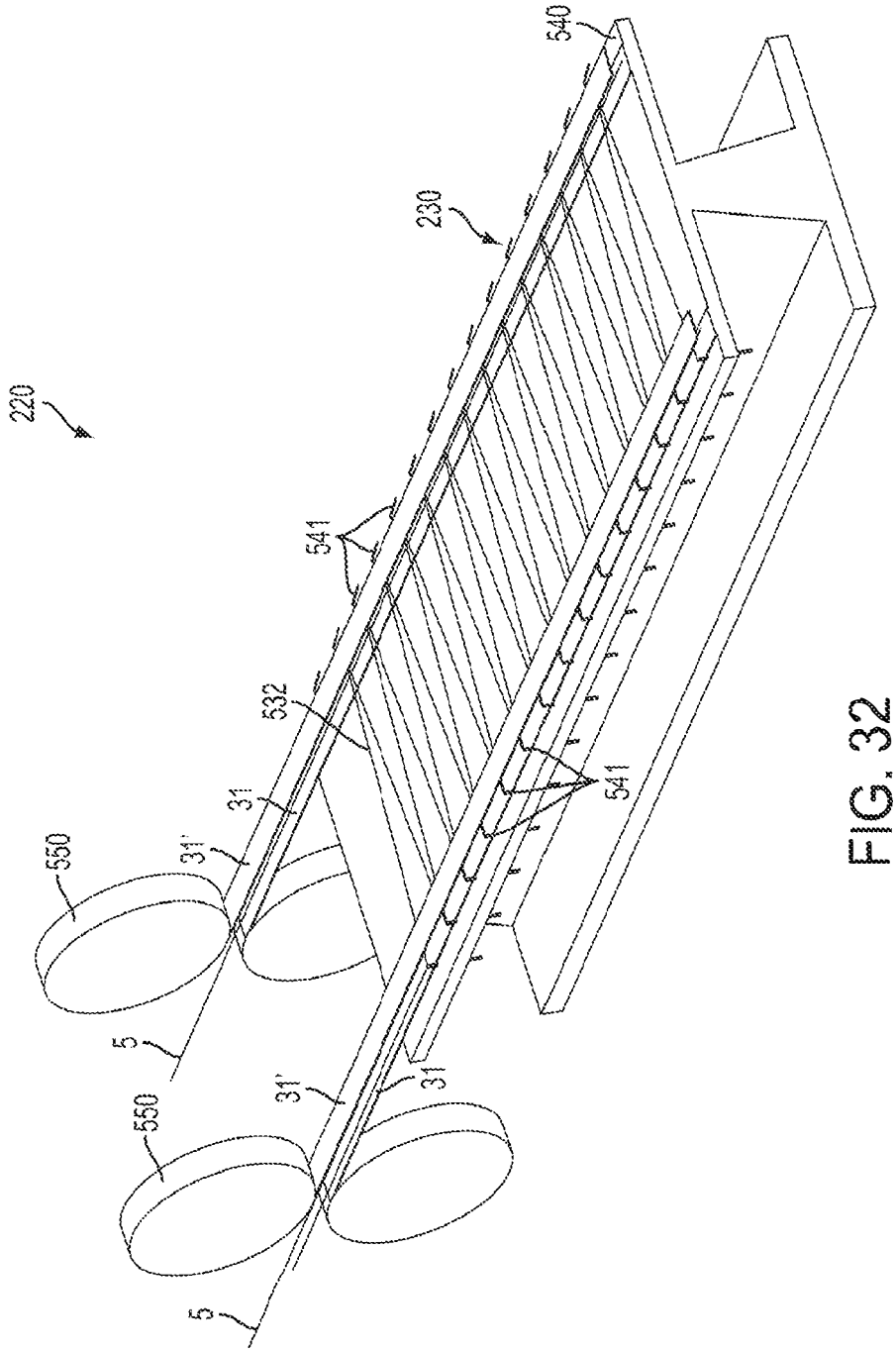

FIG. 32

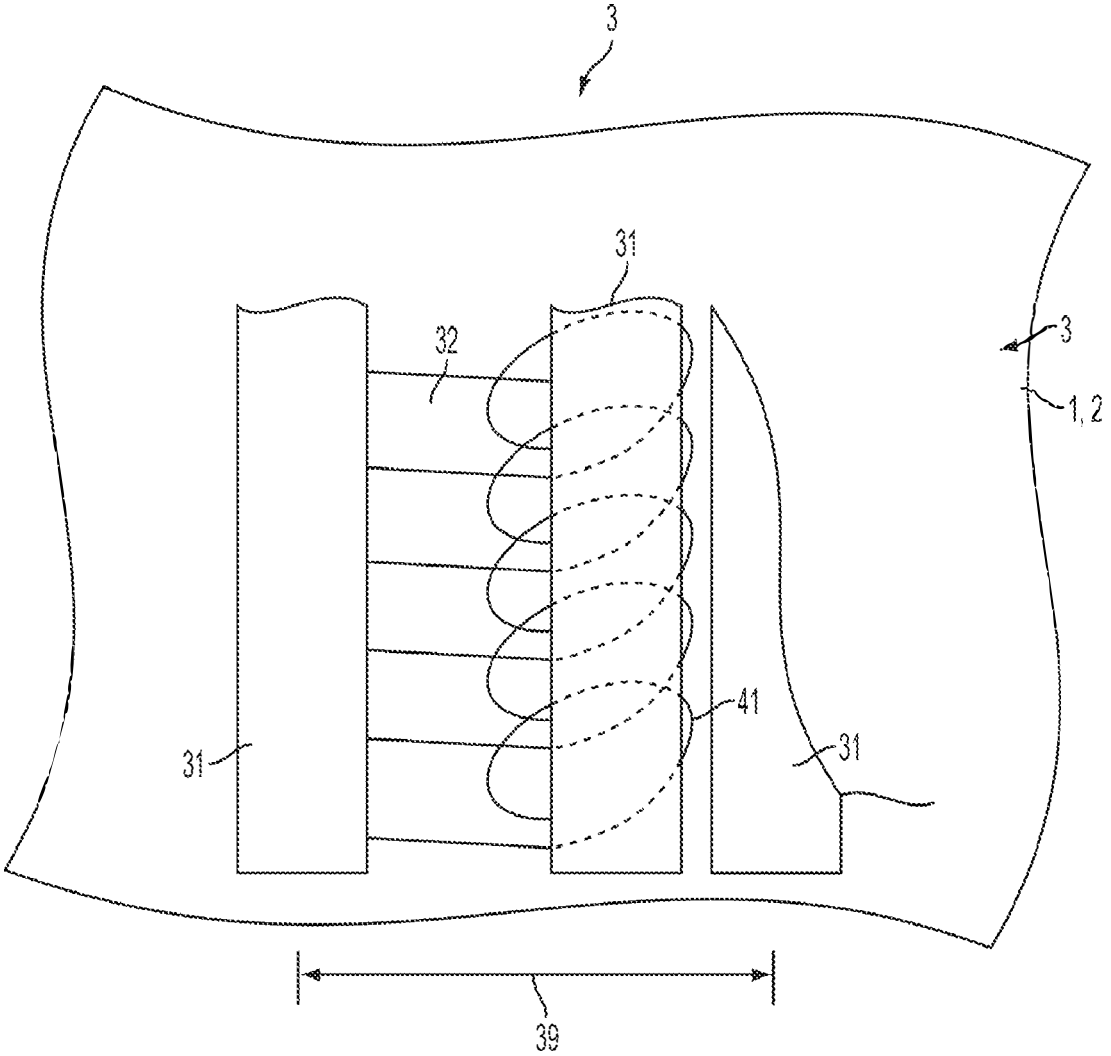

FIG. 33

INTEX EX. 1052, Pg. 67
Intex Recreation v. Bestway Inflatables, IPR2023-00486

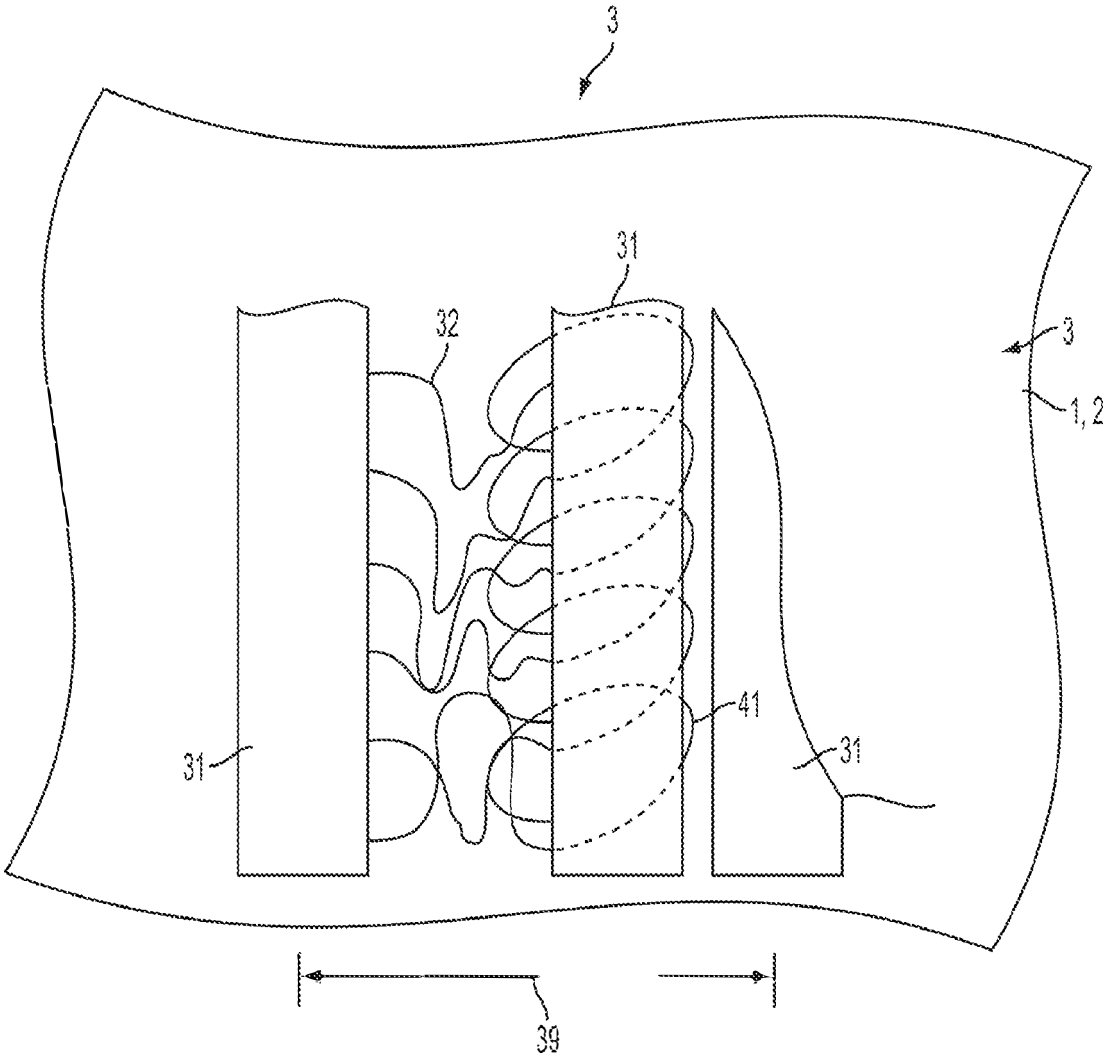

FIG. 34

INTEX EX. 1052, Pg. 68
Intex Recreation v. Bestway Inflatables, IPR2023-00486

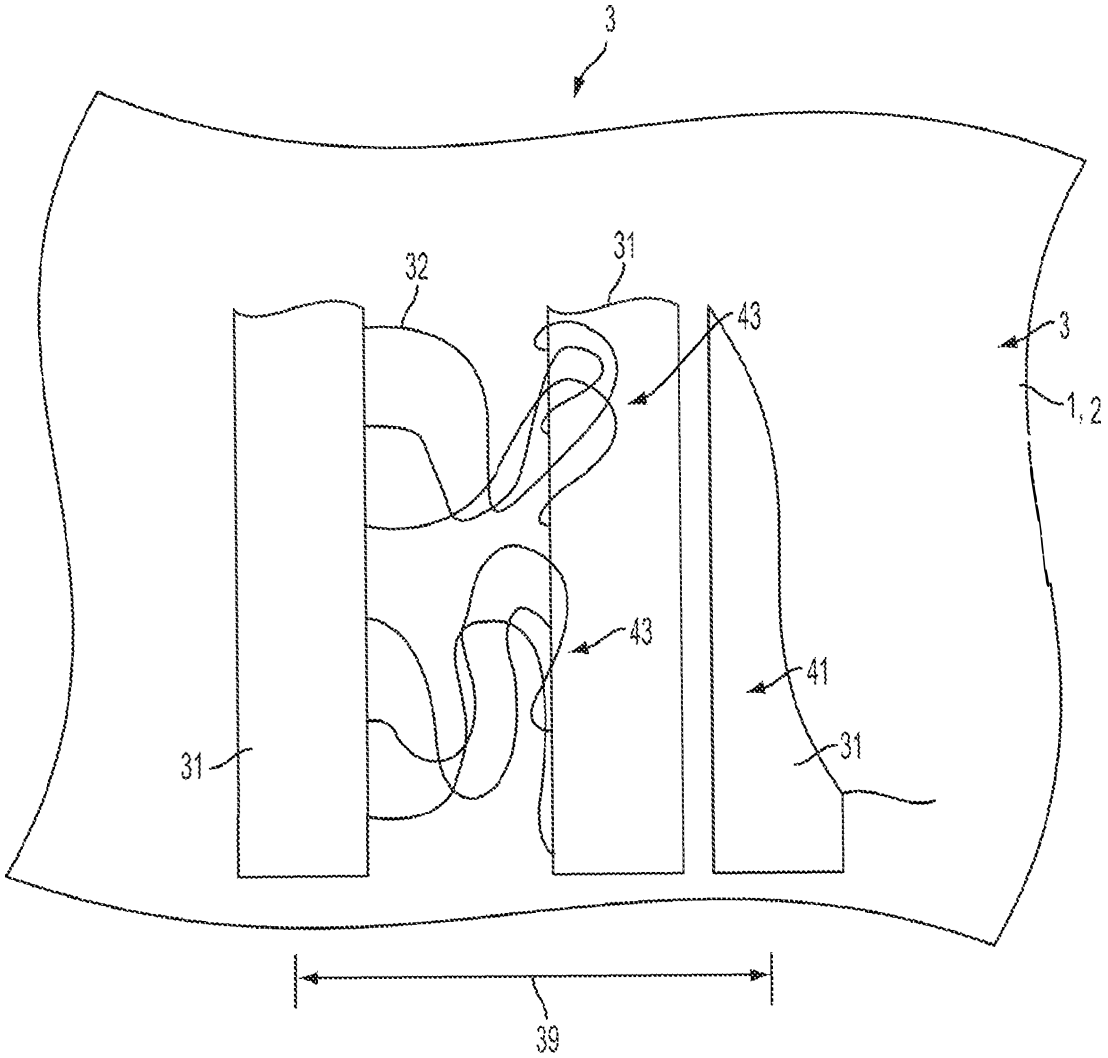

FIG. 35

INTEX EX. 1052, Pg. 69
Intex Recreation v. Bestway Inflatables, IPR2023-00486

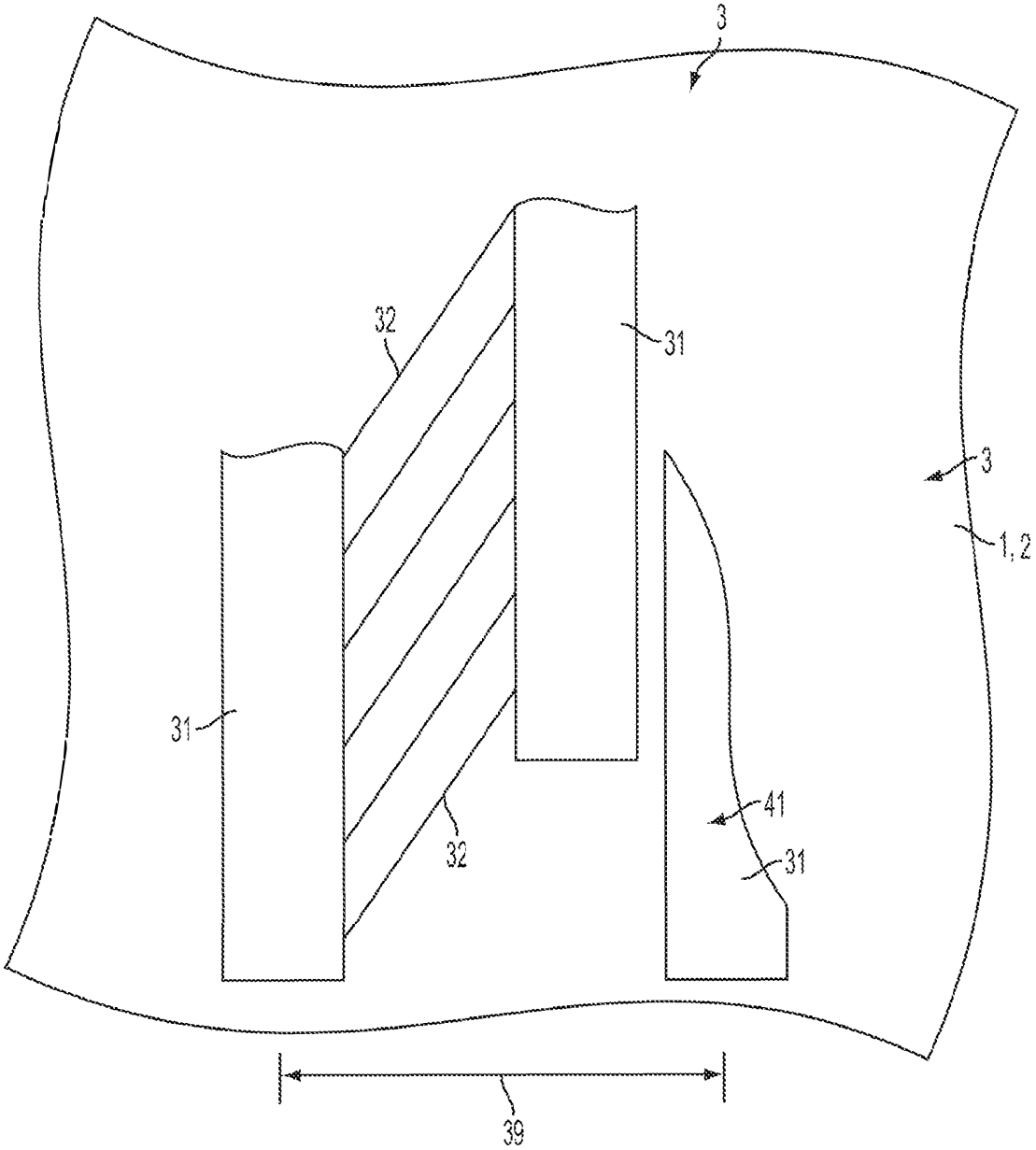

FIG. 36

INTEX EX. 1052, Pg. 70
Intex Recreation v. Bestway Inflatables, IPR2023-00486

INTERNATIONAL SEARCH REPORT

International application No.
PCT/US2012/042079

A. CLASSIFICATION OF SUBJECT MATTER
IPC(8) - A47C 27/10 (2012.01)
USPC - 5/706
According to International Patent Classification (IPC) or to both national classification and IPC

B. FIELDS SEARCHED

Minimum documentation searched (classification system followed by classification symbols)
IPC(8) - A47C 21/00, 27/08, 27/10; B63B 7/08 (2012.01)
USPC - 5/681, 706, 710, 711, 720, 721, 727, 728, 729; 28/158; 139/410; 156/145, 147, 285, 308.4

Documentation searched other than minimum documentation to the extent that such documents are included in the fields searched

Electronic data base consulted during the international search (name of data base and, where practicable, search terms used)
PatBase, Google Patents, Google

C. DOCUMENTS CONSIDERED TO BE RELEVANT

Category*	Citation of document, with indication, where appropriate, of the relevant passages	Relevant to claim No.
X -- Y	US 7,254,853 B1 (KIM) 14 August 2007 (14.08.2007) entire document	1-11, 13-27, 29-43, 45-50, 58 ---------- 12, 28, 44, 51-57, 61- 65, 67-69, 70-78, 96-97, 99, 100, 102, 103
X -- Y	US 818,321 A (WHALL) 17 April 1906 (17.04.1906) entire document	95, 98, 101 ---------- 12, 28, 44, 51-55, 57, 62, 68-78, 96, 97, 99, 100, 102, 103
Y	US 3,008,213 A (FOSTER et al) 14 November 1961 (14.11.1961) entire document	56, 61-65, 67, 69, 72, 76
A	US 2,753,573 A (BARKER) 10 July 1956 (10.07.1956) entire document	1-78, 95-103
A	US 5,249,323 A (KIKUCHI et al) 05 October 1993 (05.10.1993) entire document	1-78, 95-103

☐ Further documents are listed in the continuation of Box C. ☐

* Special categories of cited documents:
"A" document defining the general state of the art which is not considered to be of particular relevance
"E" earlier application or patent but published on or after the international filing date
"L" document which may throw doubts on priority claim(s) or which is cited to establish the publication date of another citation or other special reason (as specified)
"O" document referring to an oral disclosure, use, exhibition or other means
"P" document published prior to the international filing date but later than the priority date claimed
"T" later document published after the international filing date or priority date and not in conflict with the application but cited to understand the principle or theory underlying the invention
"X" document of particular relevance; the claimed invention cannot be considered novel or cannot be considered to involve an inventive step when the document is taken alone
"Y" document of particular relevance; the claimed invention cannot be considered to involve an inventive step when the document is combined with one or more other such documents, such combination being obvious to a person skilled in the art
"&" document member of the same patent family

Date of the actual completion of the international search	Date of mailing of the international search report
09 October 2012	18 OCT 2012
Name and mailing address of the ISA/US Mail Stop PCT, Attn: ISA/US, Commissioner for Patents P.O. Box 1450, Alexandria, Virginia 22313-1450 Facsimile No. 571-273-3201	Authorized officer: Blaine R. Copenheaver PCT Helpdesk: 571-272-4300 PCT OSP: 571-272-7774

Form PCT/ISA/210 (second sheet) (July 2009)

INTERNATIONAL SEARCH REPORT

International application No.
PCT/US2012/042079

Box No. II Observations where certain claims were found unsearchable (Continuation of item 2 of first sheet)

This international search report has not been established in respect of certain claims under Article 17(2)(a) for the following reasons:

1. ☐ Claims Nos.:
because they relate to subject matter not required to be searched by this Authority, namely:

2. ☐ Claims Nos.:
because they relate to parts of the international application that do not comply with the prescribed requirements to such an extent that no meaningful international search can be carried out, specifically:

3. ☐ Claims Nos.:
because they are dependent claims and are not drafted in accordance with the second and third sentences of Rule 6.4(a).

Box No. III Observations where unity of invention is lacking (Continuation of item 3 of first sheet)

This International Searching Authority found multiple inventions in this international application, as follows:

SEE CONTINUATION SHEET ATTACHED

1. ☐ As all required additional search fees were timely paid by the applicant, this international search report covers all searchable claims.

2. ☐ As all searchable claims could be searched without effort justifying additional fees, this Authority did not invite payment of additional fees.

3. ☐ As only some of the required additional search fees were timely paid by the applicant, this international search report covers only those claims for which fees were paid, specifically claims Nos.:

4. ☒ No required additional search fees were timely paid by the applicant. Consequently, this international search report is restricted to the invention first mentioned in the claims; it is covered by claims Nos.:
claims 1-78 and 95-103

Remark on Protest

☐ The additional search fees were accompanied by the applicant's protest and, where applicable, the payment of a protest fee.

☐ The additional search fees were accompanied by the applicant's protest but the applicable protest fee was not paid within the time limit specified in the invitation.

☐ No protest accompanied the payment of additional search fees.

(CONTINUATION OF BOX III)

This application contains the following inventions or groups of inventions which are not so linked as to form a single general inventive concept under PCT Rule 13.1. In order for all inventions to be examined, the appropriate additional examination fees need to be paid.

Group I, claims 1-78 and 95-103 are drawn to an inflatable product.

Group II, claims 79-94 are drawn to a methods of making a tensioning device.

The inventions listed in Groups I and II do not relate to a single general inventive concept under PCT Rule 13.1, because under PCT Rule 13.2 they lack the same or corresponding special technical features for the following reasons:

The special technical features of Group I, an inflatable product including a first sheet, second sheet, weld strands, and tensioning structure including a plurality of strands, are not present in Group II; and the special technical features of Group II, a method of making a tensioning device including the steps of: arranging weld and adhesive devices, supplying a plurality of strands, positioning weld strips, advancing one or more dies, and an adhesive device to orient one or more strands, arranging a hot roller and delivering a weld sheet; and wrapping of continuous strands around a plurality of members are not present in Group I.

Groups I and II share the technical features of using a tensioning device including a plurality of strands with weld strips and weld sheets. However, these shared technical features do not represent a contribution over the prior art. Specifically, US 7,254,853 B1 to Kim teaches an inflatable product (air mattress body 10 at Fig. 5; see also Col. 2, Lns. 6-8) including a tensioning device (plurality of threads 14 attached to sheets 11 and 12 as seen in Fig. 5 act as a tensioning structure, Col. 1, Lns. 41-51) including a plurality of strands (plurality of fiber threads 14 as seen in Fig. 5; Col. 3, Lns. 25-30) with weld strips (strips 11a and 12a which are formed at sheets 11 and 12 respectively as seen in Fig. 5, Col. 2, Lns. 59-63; see also Para. [0080] of Applicant's specification wherein it is stated "weld strips 31 need not be welded to upper or lower materials 1, 2, and the term "weld strip" as used herein refers to any strip of material suitable for affixation to another material, whether by application of heat, application of adhesive, mechanical joining methods such as sewing and riveting, or any other suitable method") and weld sheets (sheets 11 and 12 are capable of attaching to strips 11a and 12a respectively, Col. 2, Lns. 59-63; see also Para. [0080] of Applicant's specification).

Since none of the special technical features of the Group I and II inventions are found in more than one of the inventions, unity is lacking.