US010687633B2

(12) **United States Patent**
Liu

(10) **Patent No.: US 10,687,633 B2**
(45) **Date of Patent: Jun. 23, 2020**

(54) **INFLATABLE BED**

(71) Applicant: **BESTWAY INFLATABLES & MATERIALS CORP.**, Shanghai (CN)

(72) Inventor: **Feng Liu**, Shanghai (CN)

(73) Assignee: **BESTWAY INFLATABLES & MATERIAL CORP.**, Shanghai (CN)

(*) Notice: Subject to any disclaimer, the term of this patent is extended or adjusted under 35 U.S.C. 154(b) by 716 days.

(21) Appl. No.: **15/280,513**

(22) Filed: **Sep. 29, 2016**

(65) **Prior Publication Data**

US 2017/0196368 A1 Jul. 13, 2017

(30) **Foreign Application Priority Data**

Jan. 13, 2016 (CN) 2016 1 0020533
Jan. 13, 2016 (CN) ..... 2016 2 0031074 U

(51) **Int. Cl.**
A47C 27/08 (2006.01)
A47C 27/16 (2006.01)

(52) **U.S. Cl.**
CPC ***A47C 27/081*** (2013.01); ***A47C 27/087*** (2013.01); ***A47C 27/16*** (2013.01)

(58) **Field of Classification Search**
CPC A47C 27/081; A47C 27/087
See application file for complete search history.

(56) **References Cited**

U.S. PATENT DOCUMENTS

2,360,715 A 10/1944 Hough
3,008,213 A * 11/1961 Foster A47C 27/081 28/158
4,541,135 A 9/1985 Karpov
(Continued)

FOREIGN PATENT DOCUMENTS

CN 2706070 Y 6/2005
CN 2904820 Y 5/2007
(Continued)

OTHER PUBLICATIONS

Communication of a notice of opposition dated Jun. 27, 2019 (Jun. 27, 2019) on related European patent application 16191360.3 issued by the European Patent Office / Opposition Division.
(Continued)

Primary Examiner — Eric J Kurilla
(74) *Attorney, Agent, or Firm* — A J Moss; Dickinson Wright PLLC

(57) **ABSTRACT**

An inflatable bed is provided. The inflatable bed comprises a top sheet and a bottom sheet disposed vertically at an interval, at least one side wall, at least one first tensioning structure and at least one support structure. An upper edge of said side wall is coupled to an outer edge of said top sheet. A lower edge of said side wall is coupled to an outer edge of said bottom sheet. An upper end and a lower end of said first tensioning structure are respectively coupled to said top sheet and said bottom sheet. Said support structure is disposed in a longitudinal direction of at least one of said side walls. At least two outside edges of said support structure are respectively coupled to the side wall adjacent. At least one inside edge of said support structure is coupled to the top sheet or bottom sheet adjacent.

20 Claims, 16 Drawing Sheets

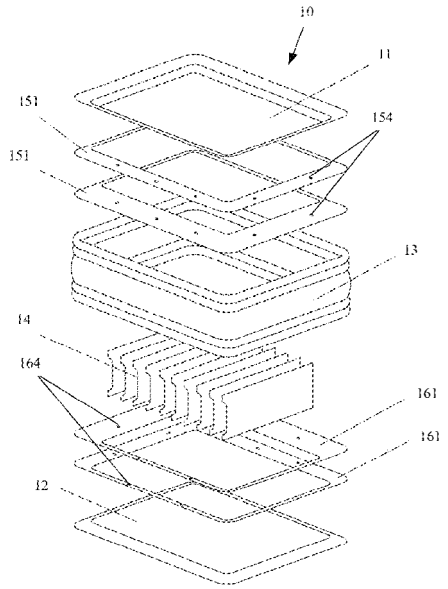

(56) **References Cited**

U.S. PATENT DOCUMENTS

4,558,476	A *	12/1985	Linder	A47C 27/081 5/682
4,941,223	A	7/1990	Santo	
5,669,091	A	9/1997	Chung	
6,568,013	B2	5/2003	Perez et al.	
6,671,910	B2	1/2004	Hsu et al.	
6,701,559	B2	3/2004	Boso et al.	
6,754,926	B2	6/2004	Wang	
6,971,134	B2	12/2005	Wu	
6,996,867	B2	2/2006	Boso et al.	
7,039,972	B2	5/2006	Chaffee	
7,165,283	B2	1/2007	Boso et al.	
7,337,485	B2	3/2008	Metzger	
7,530,128	B2	5/2009	Wu	
9,254,047	B1	2/2016	Schermel et al.	
2003/0101516	A1	6/2003	Hsu et al.	
2005/0273938	A1	12/2005	Metzger et al.	
2007/0124864	A1*	6/2007	Lau	A47C 27/081 5/711
2007/0277324	A1	12/2007	Liu	
2009/0165211	A1	7/2009	Rong-Jyh et al.	
2013/0145660	A1	6/2013	Chen	
2013/0228268	A1*	9/2013	Lin	A47C 27/081 156/166
2015/0147503	A1*	5/2015	Lin	B32B 7/12 428/35.7
2015/0201760	A1*	7/2015	Lin	A47C 27/087 5/710
2015/0335164	A1*	11/2015	Liu	A47C 27/081 428/12
2017/0273472	A1*	9/2017	Liu	A47C 27/081

FOREIGN PATENT DOCUMENTS

CN	201045987	Y	4/2008
CN	202751069	U	2/2013
CN	103110297	A	5/2013
CN	203137719	U	8/2013
CN	205457538	U	8/2016
FR	2914545		10/2008
GB	434098		11/1933
WO	2013130117		9/2013

OTHER PUBLICATIONS

European Search Report dated May 11, 2017.
SIPO Search Report dated Jan. 30, 2019.

* cited by examiner

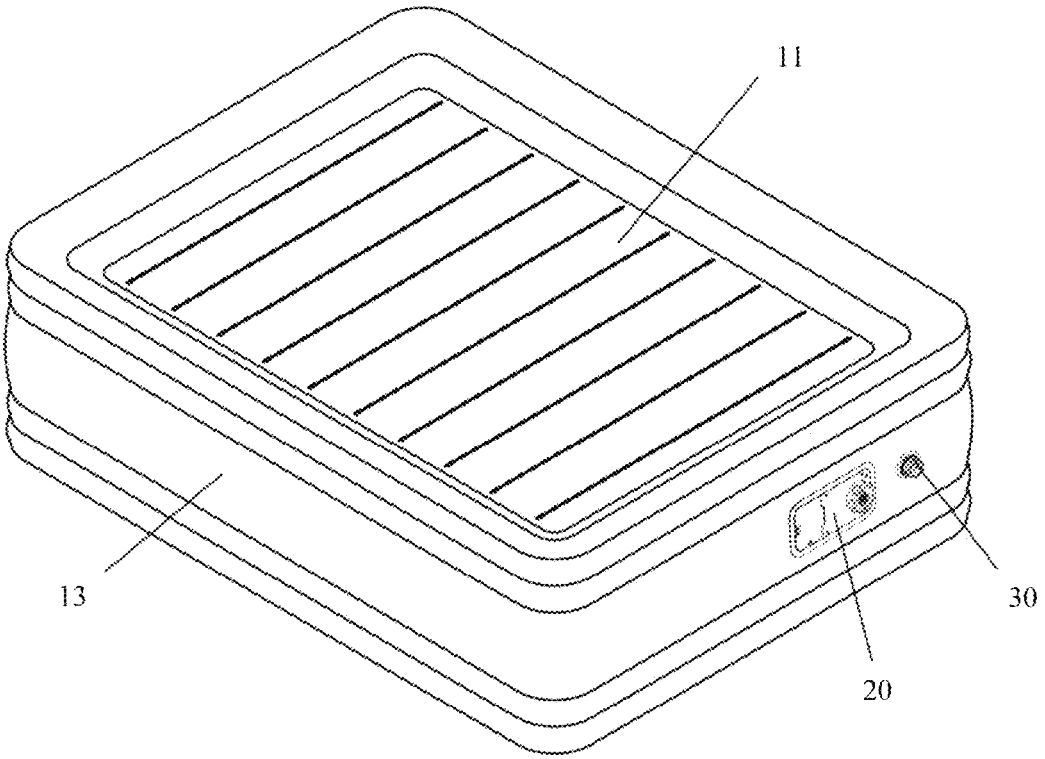

Fig. 1

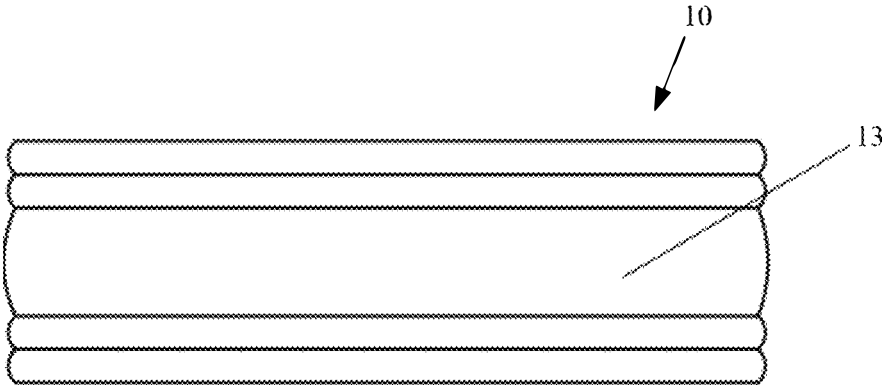

Fig. 2

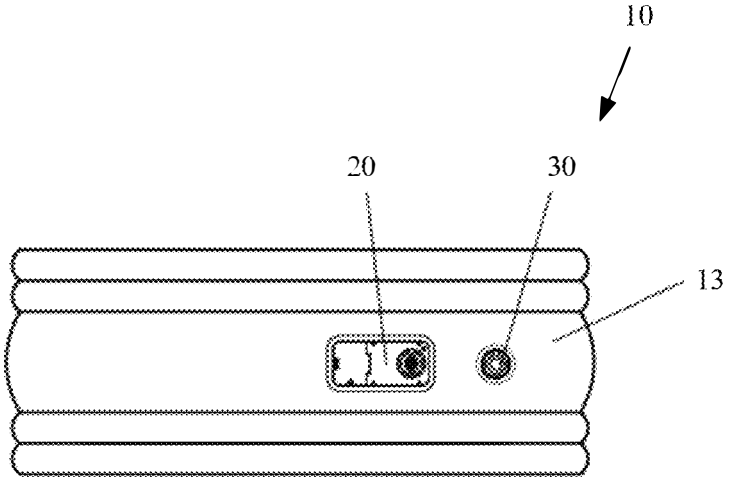

Fig. 3

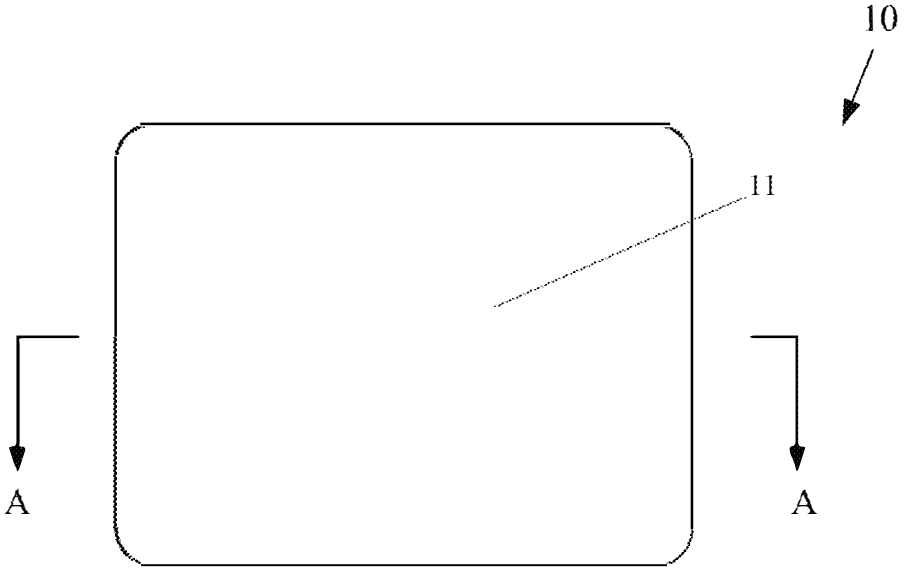
10
11
A
A

Fig. 4

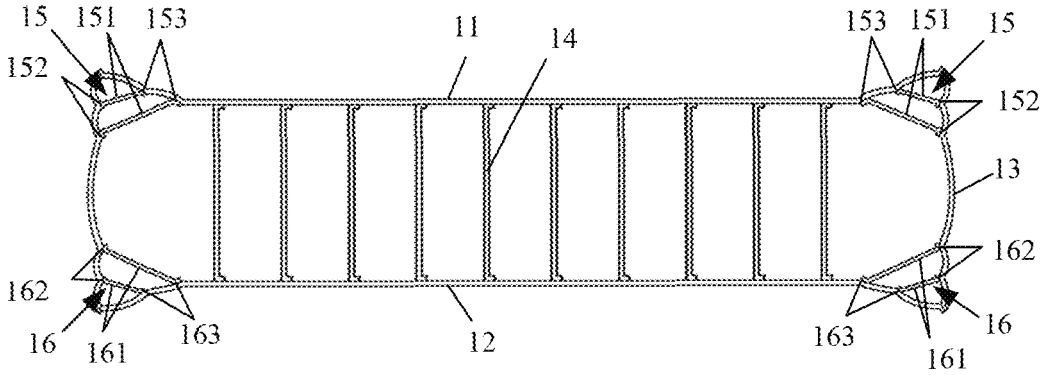
15
151
153
152
11
14
153
151
15
152
13
162
162
16
161
163
12
163
16
161

Fig. 5

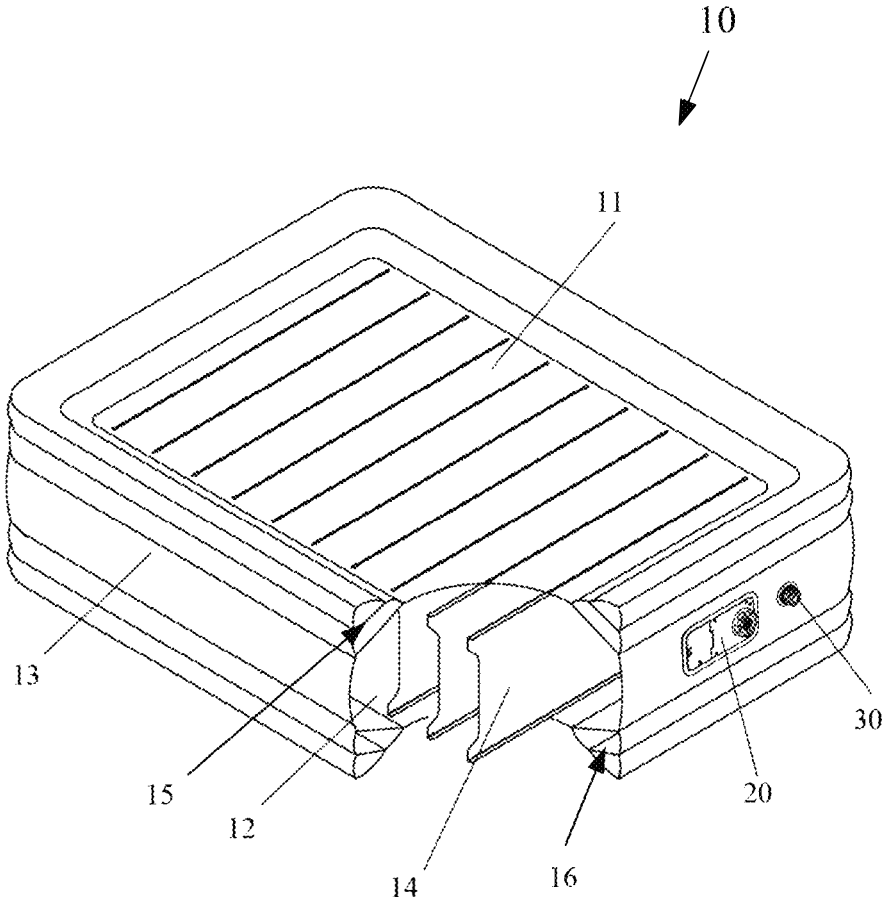

Fig. 6

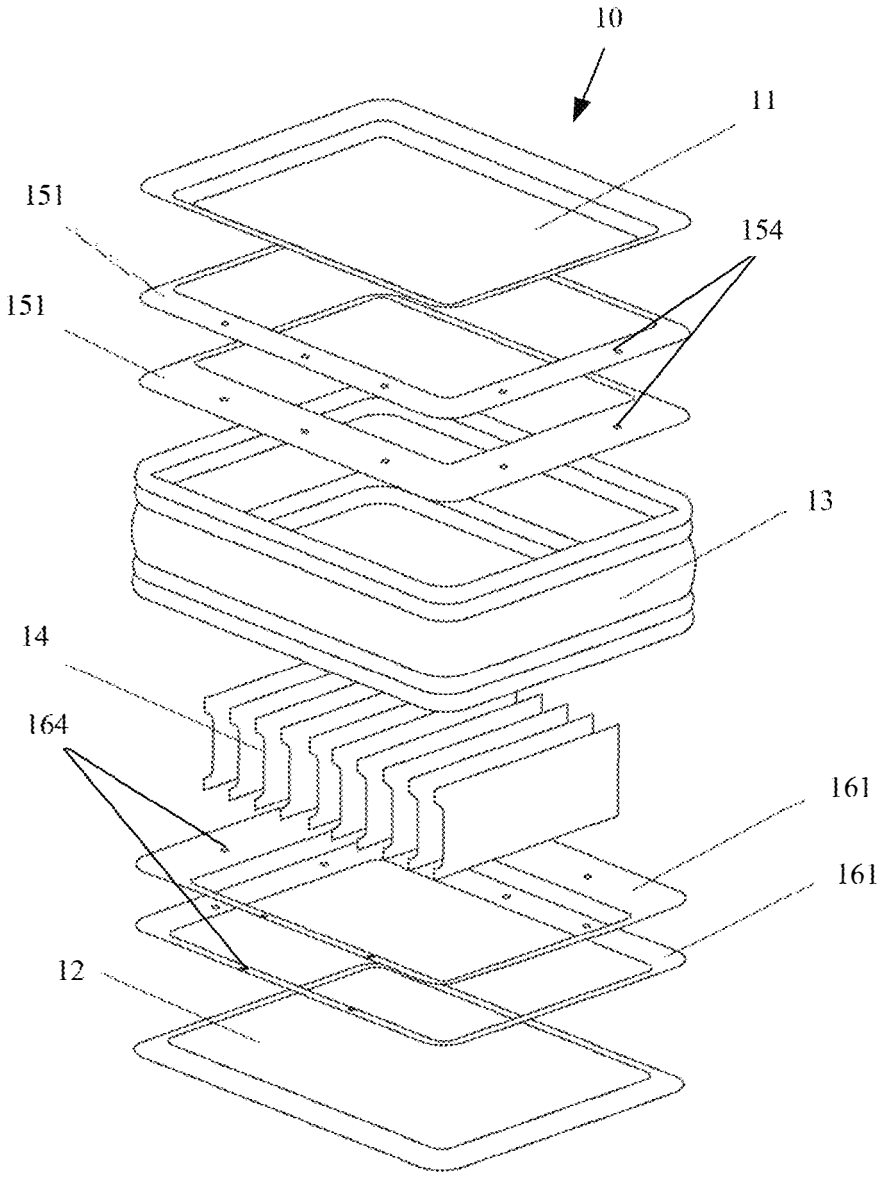

Fig. 7

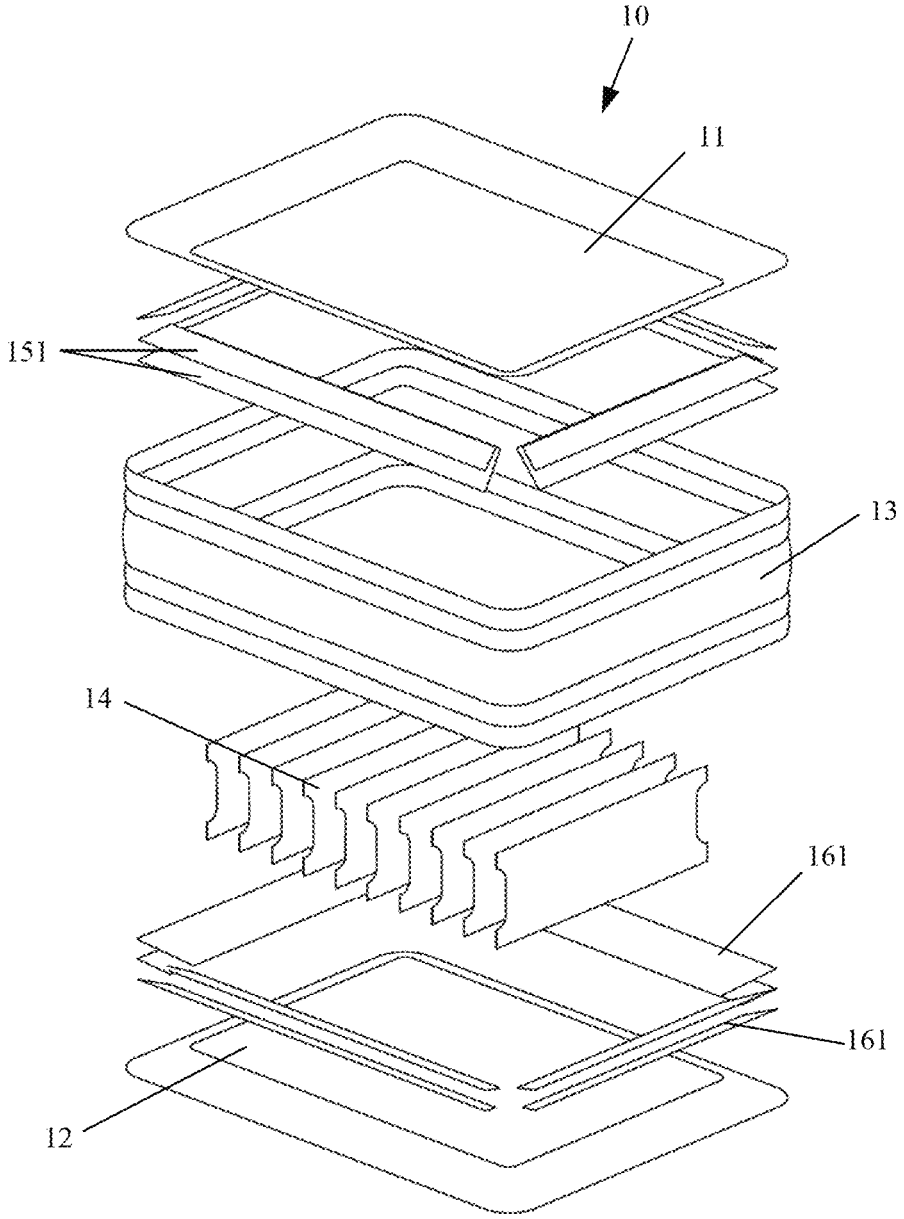

Fig. 8

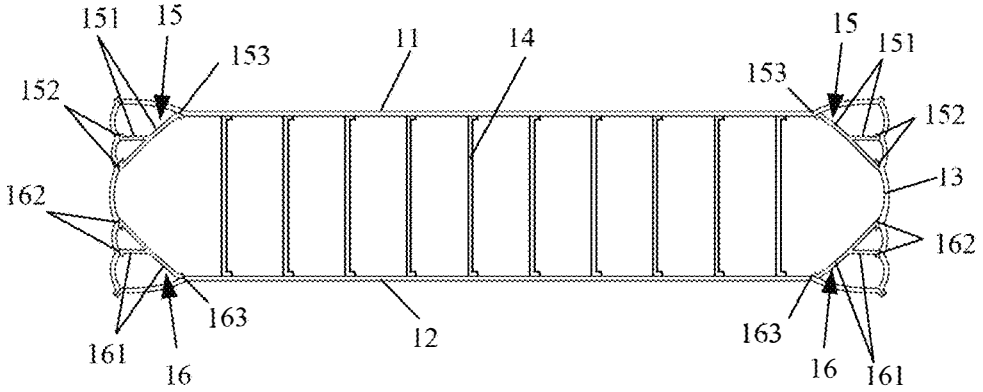
151
15
153
11
14
15
151
153
152
152
13
162
162
163
12
163
161
16
16
161

Fig. 9

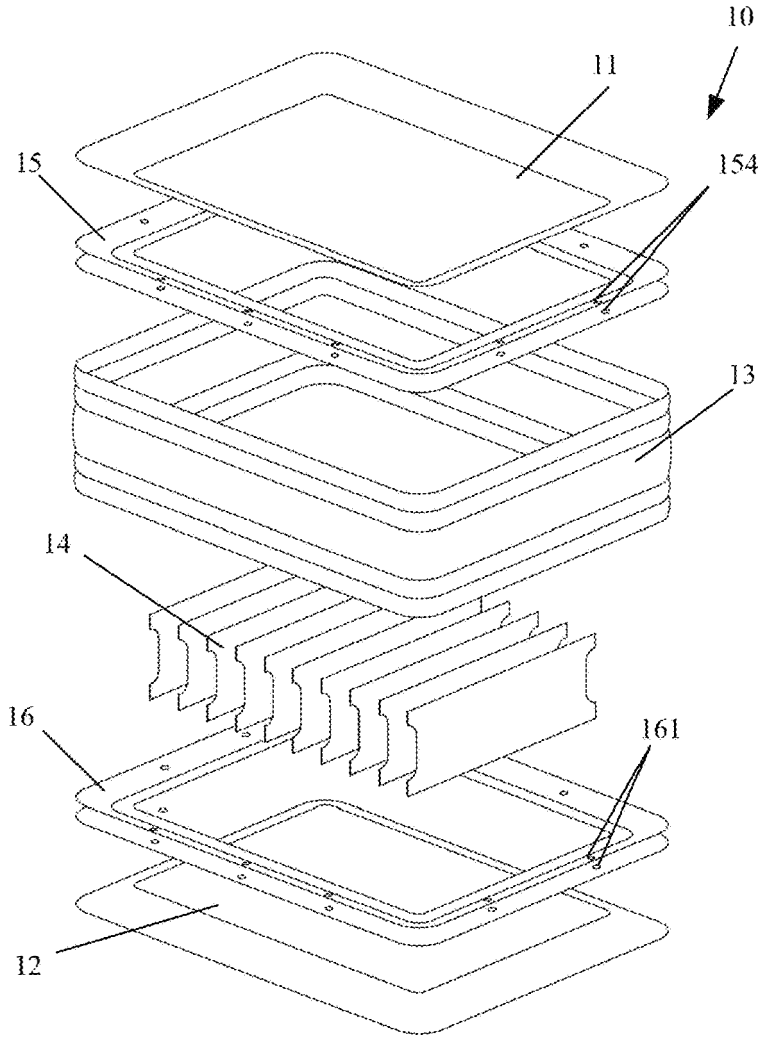
10
11
15
154
13
14
16
161
12

Fig. 10

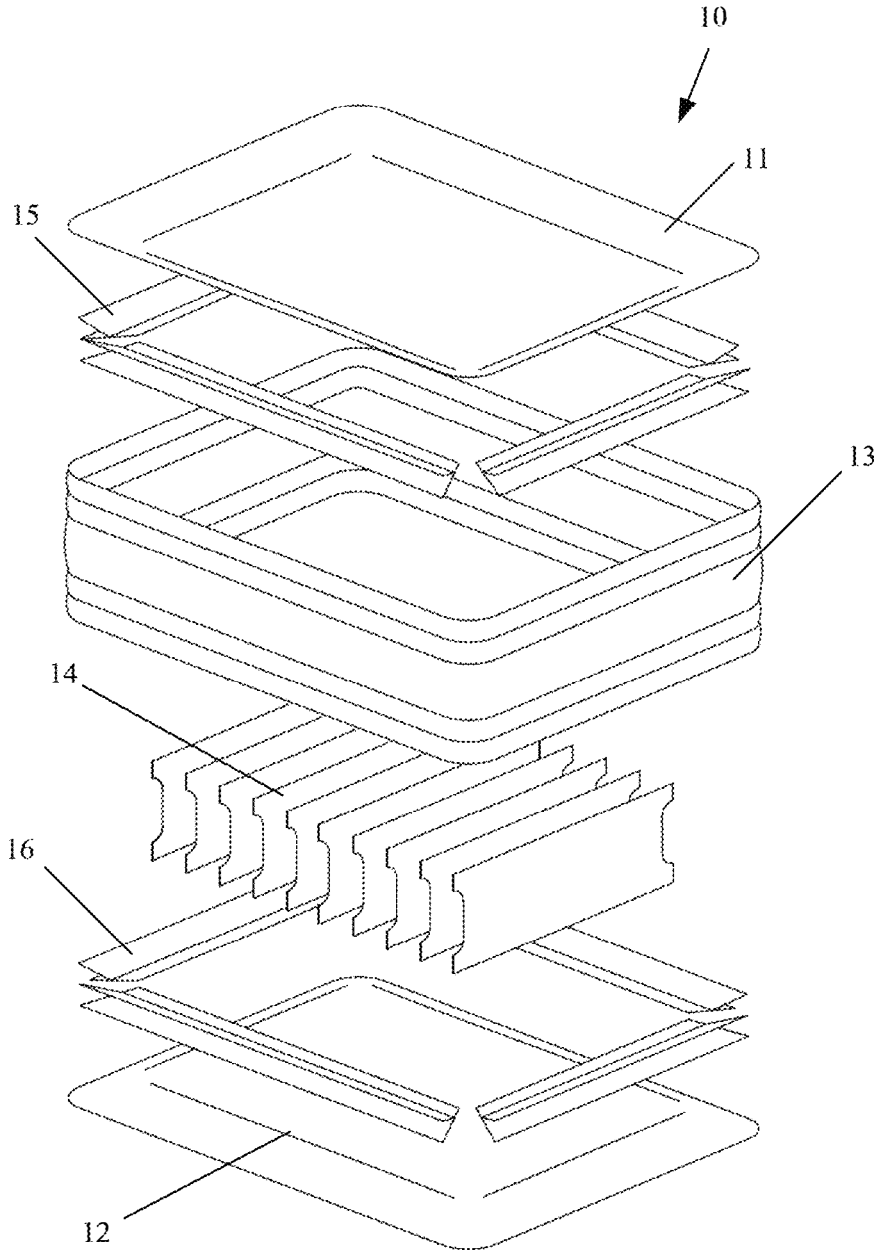

Fig. 11

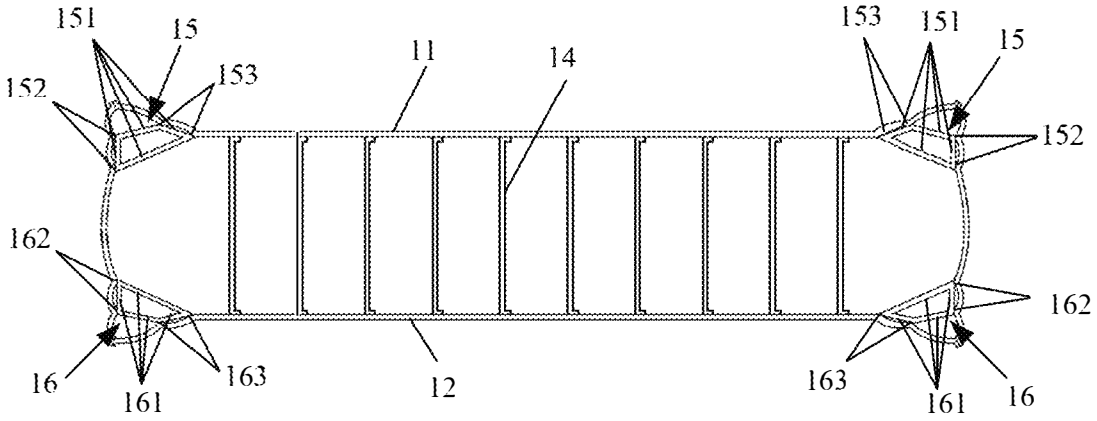
151
15
153
152
11
14
153
151
15
152
162
162
16
161
163
12
163
161
16

Fig. 12

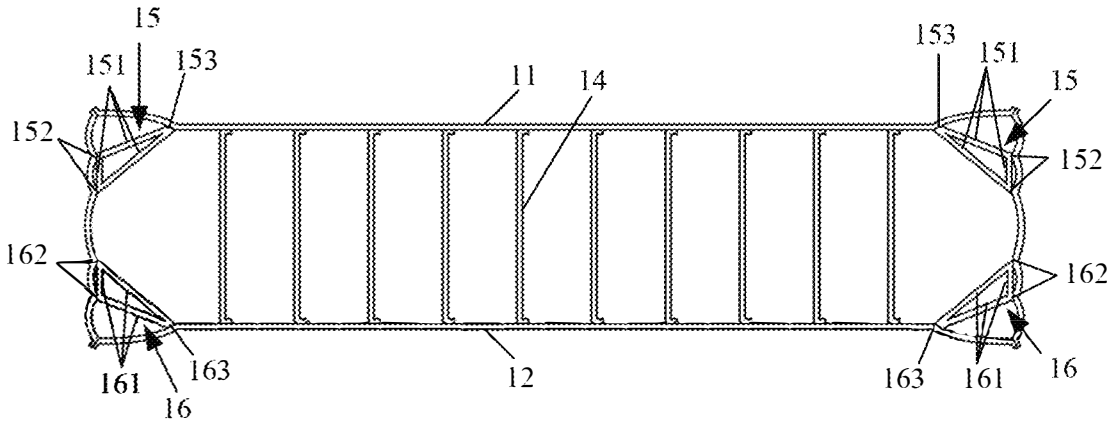
15
151
153
152
11
14
153
151
15
152
162
162
161
163
16
12
163
161
16

Fig. 13

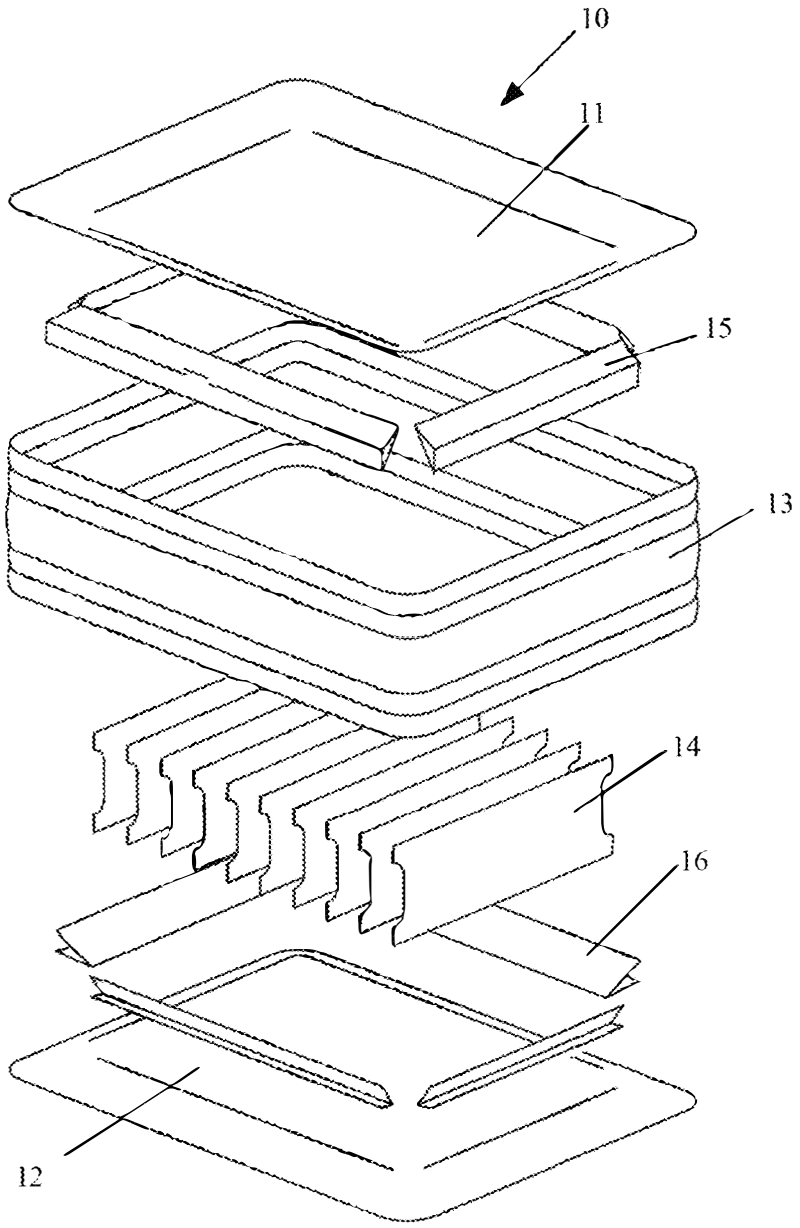

Fig. 14

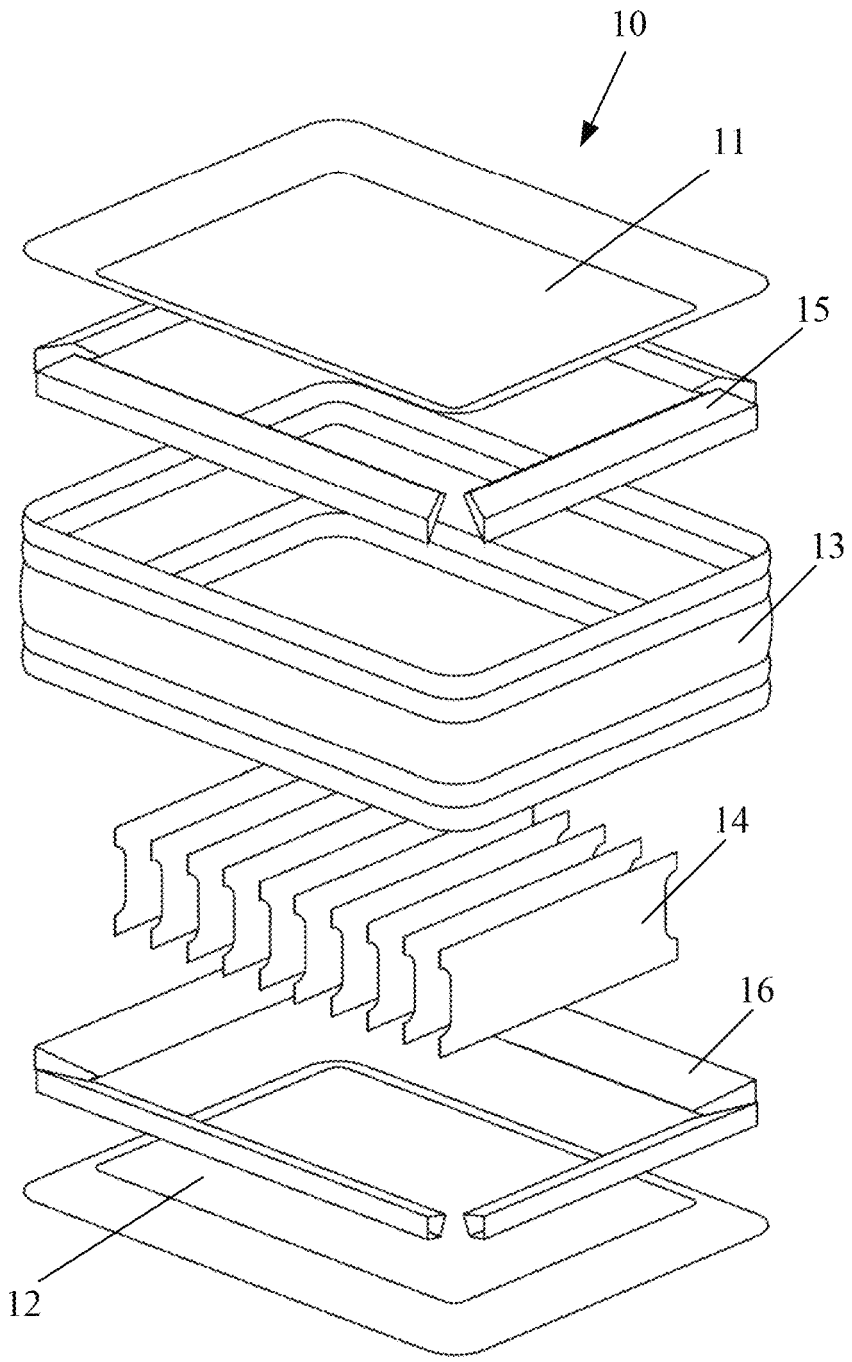

Fig. 15

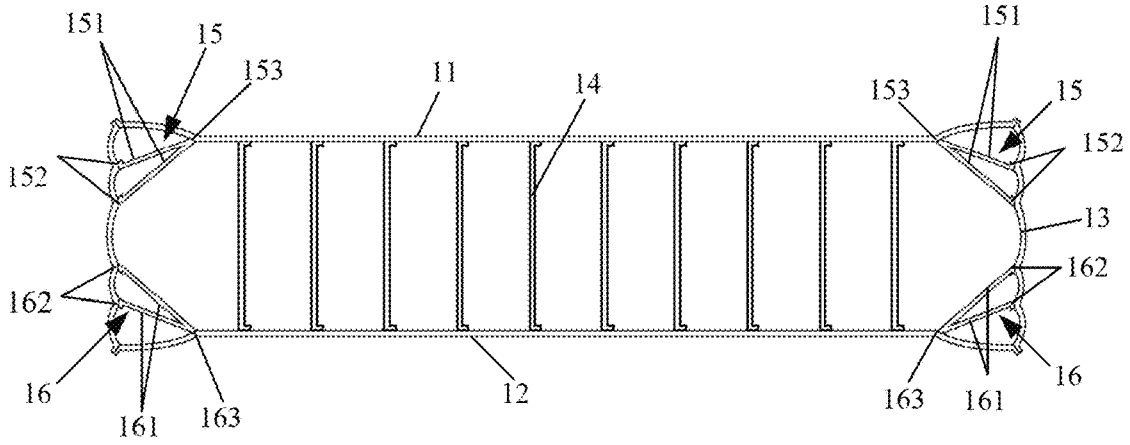
151
15
153
11
14
153
151
15
152
152
13
162
162
16
161
163
12
163
161
16

Fig. 16

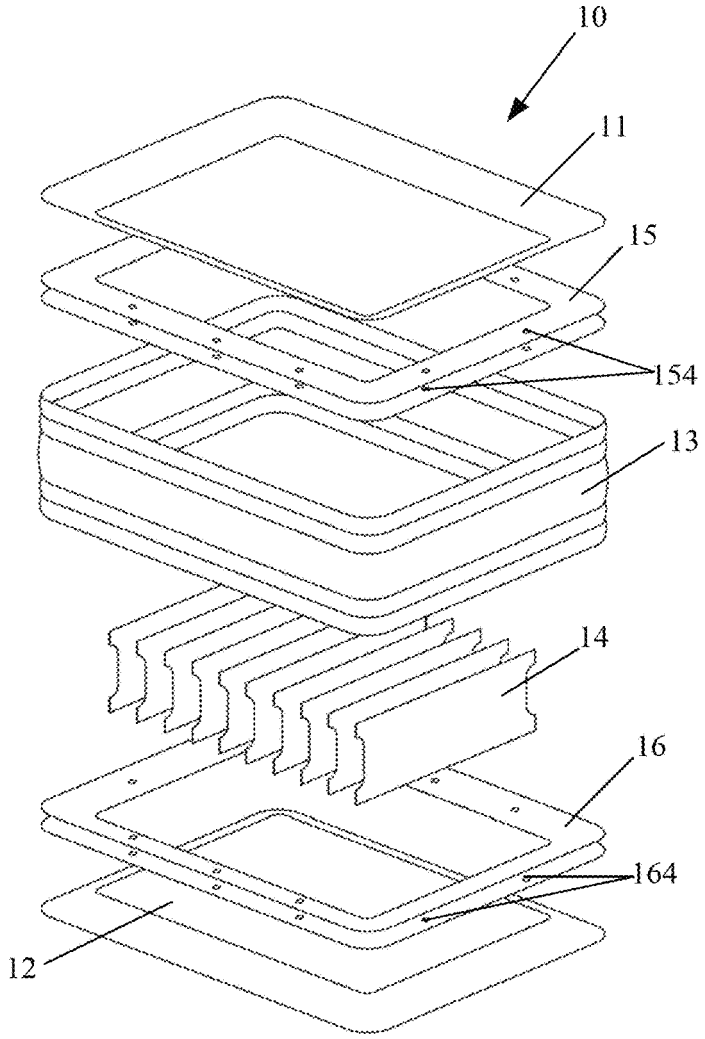
10
11
15
154
13
14
16
164
12

Fig. 17

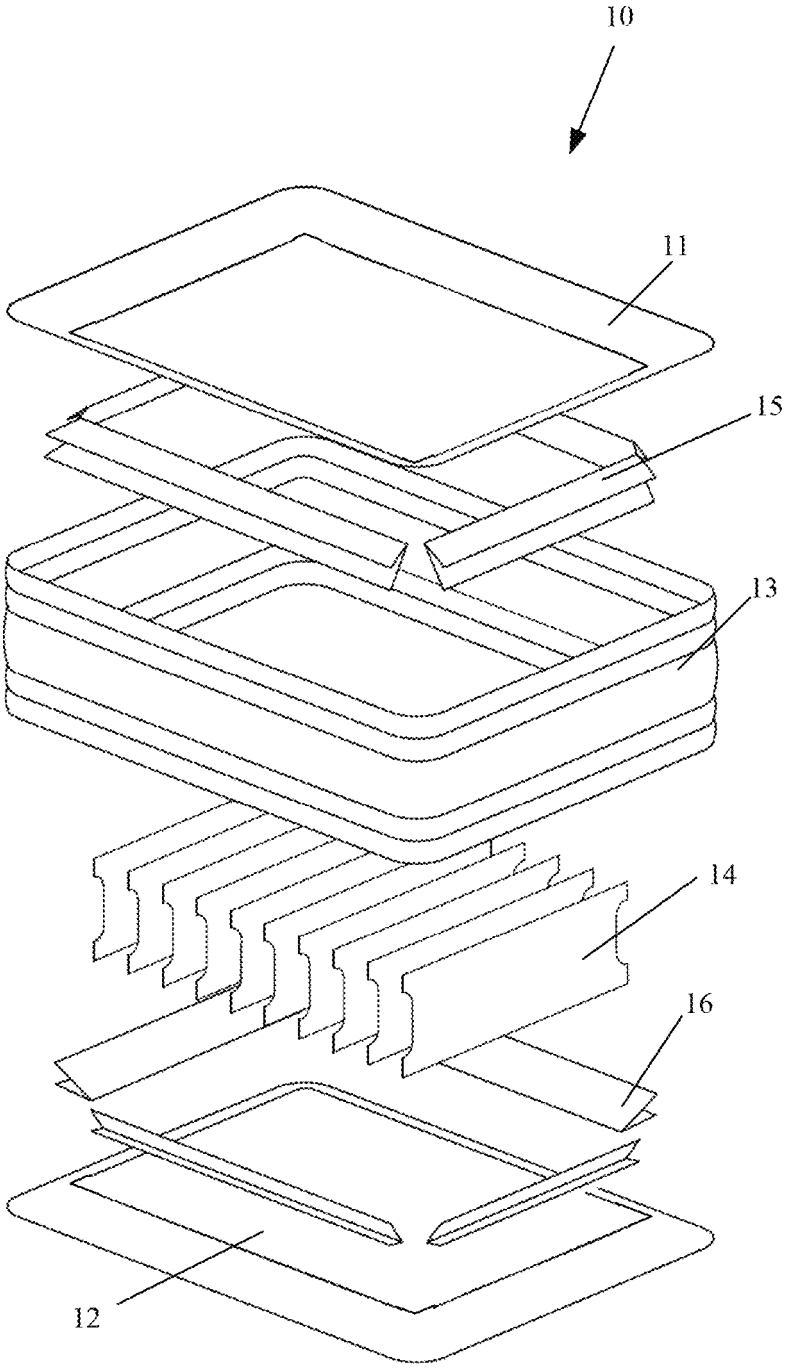

Fig. 18

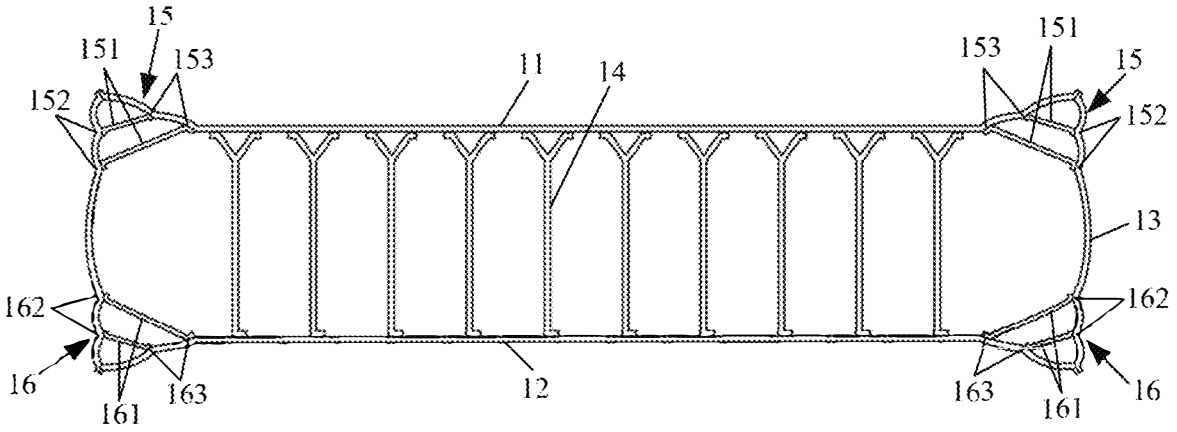
15
151
153
152
11
14
153
151
15
152
13
162
162
16
161
163
12
163
161
16

Fig. 19

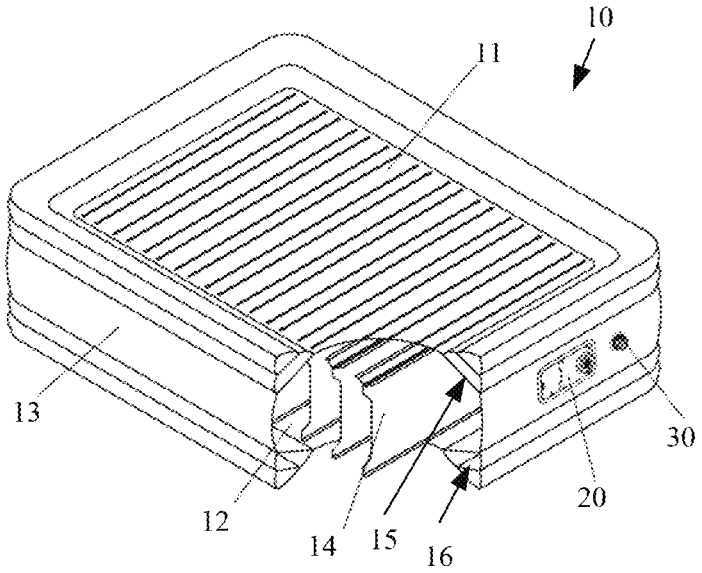
10
11
13
12
14
15
16
20
30

Fig. 20

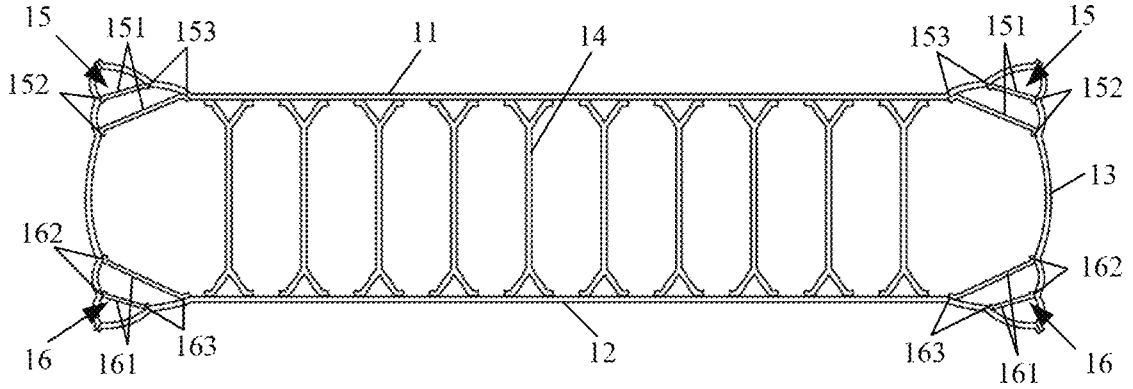
15
151
153
11
14
153
151
15
152
152
13
162
162
16
161
163
12
163
161
16

Fig. 21

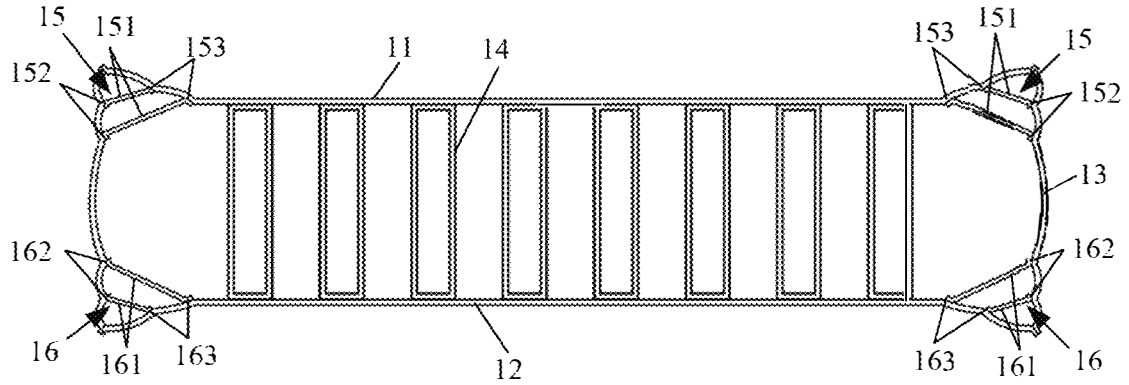
15
151
153
11
14
153
151
15
152
152
13
162
162
16
161
163
12
163
161
16

Fig. 22

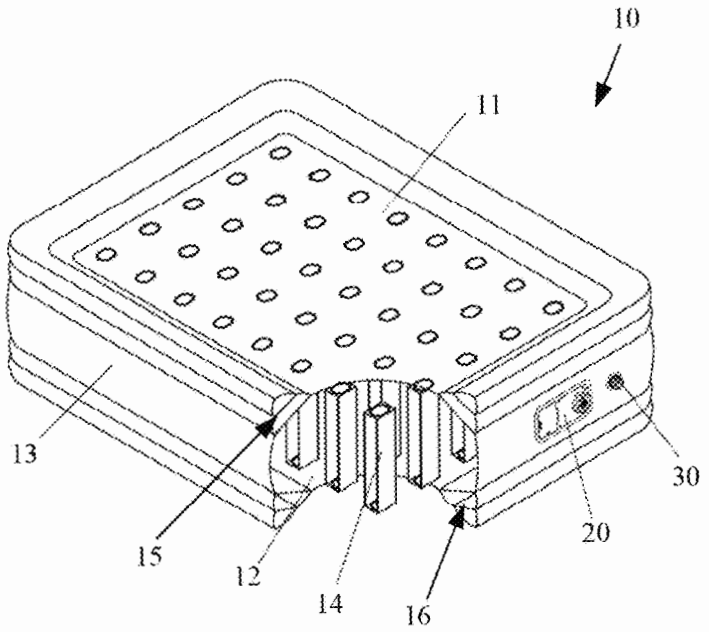
10
11
13
15
12
14
16
20
30

Fig. 23

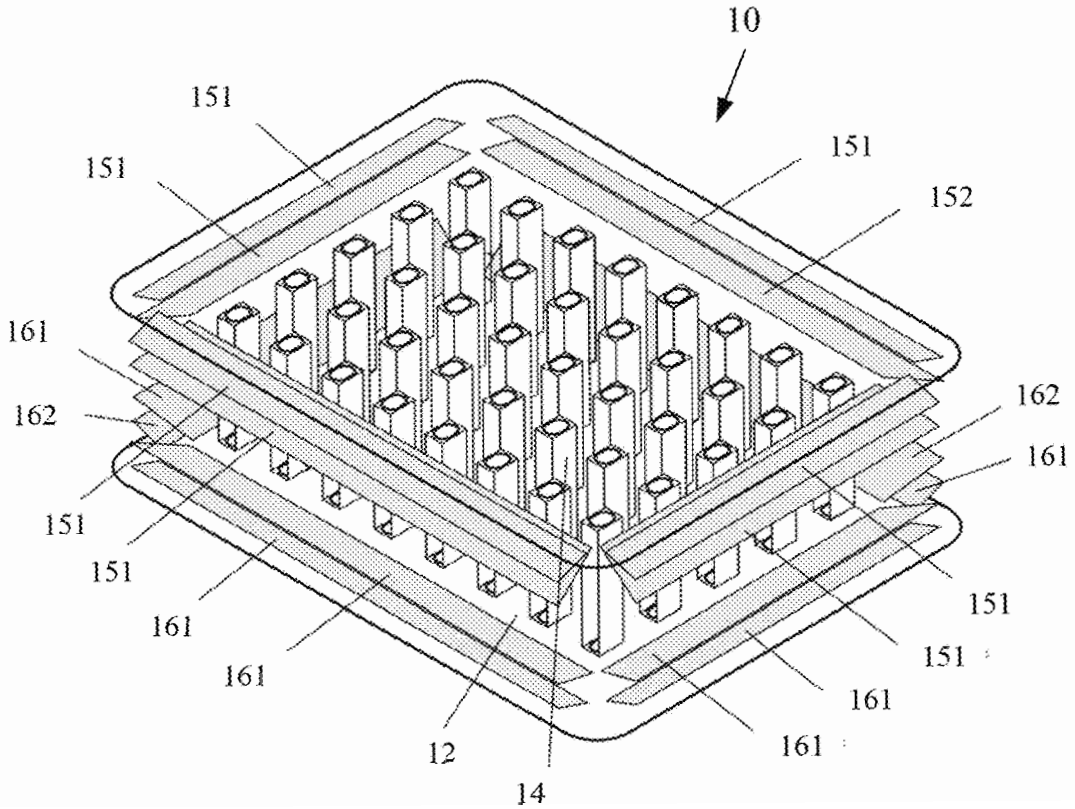
10
151
151
151
152
161
162
162
161
151
151
161
161
151
151
161
161
12
14

Fig. 24

INFLATABLE BED

CROSS REFERENCE

This application claims the benefit and priority of Chinese Application No. 201610020533.5, filed Jan. 13, 2016. The entire disclosures of each of the above applications are incorporated herein by reference.

FIELD OF THE INVENTION

The present invention relates to inflatable beds or inflatable mattresses, and more specifically, to an inflatable bed, the structure of which is configured to limit the outward bulging or deformation of a side wall.

BACKGROUND

Currently, inflatable beds and inflatable mattresses have been very popular. The inflatable beds and inflatable mattresses have the advantages of light weight, easy to carry and store, etc., and thus are widely used in various occasions. For example, household inflatable beds and inflatable mattresses can often be used as temporary beds for visiting guests. In addition, the inflatable beds and inflatable mattresses are very suitable for use in outdoor camping.

Conventionally, the inflatable beds and inflatable mattresses are generally made of PVC sheet, PU sheet, or the like, and have various different structures, in which a typical mechanism is that using a top sheet, a bottom sheet, and a side wall coupled to the top sheet and the bottom sheet to form an inflatable air chamber. Tensioning structures, which are coupled to the top sheet and the bottom sheet and are arranged at an interval, are disposed in the air chamber, so as to form a shape having a certain height and a substantially flat upper surface for people to lie on.

Among the existing inflatable beds and inflatable mattresses, some have a larger height, whereby the side walls of the inflatable beds and inflatable mattresses after being inflated are susceptible to bulge and deform, affecting the appearance of the inflatable beds and inflatable mattresses. And, the bulging and deformation of the inflatable beds and inflatable mattresses may also result in the decay of air pressure in the air chamber, such that the inflatable beds and inflatable mattresses are softened, reducing the comfort of the inflatable beds and inflatable mattresses.

Therefore, in order to solve the above-mentioned problem of bulging of the side walls, in some inflatable beds and inflatable mattresses, a middle sheet is arranged between the top sheet and the bottom sheet and is coupled to the side walls. In the inflatable beds and inflatable mattresses of such a structure, although the problem of bulging and deformation of the side walls is slightly improved, the desired result still cannot be achieved. Moreover, since tensioning structures have to be arranged between the middle sheet and the top sheet and between the middle sheet and the bottom sheet, the manufacturing process of the inflatable beds and inflatable mattresses becomes more complicated, that is to say, more plastic sheet is required.

Furthermore, in the prior art, the inflatable beds and inflatable mattresses with a relatively large height have a defect in its stability. When a user lies on or seats near the edge of the inflatable beds and inflatable mattresses, the inflatable beds and inflatable mattresses are susceptible to roll over. In order to improve the stability, an inflatable stabilization tube is arranged on the outer periphery of the bottom sheet of the inflatable bed in U.S. Pat. No. 6,671,910.

However, such a structure will not only affect the aesthetic appearance of the inflatable bed, but also brings inconvenience to the user.

SUMMARY

The technical problem to be solved by the present invention is to provide an inflatable bed, in order to overcome the defects of easy occurrence of bulging and deformation of the side walls of the inflatable beds and inflatable mattresses, poor stability of the inflatable beds and inflatable mattresses, and susceptibility of roll-over in the prior art.

The above-mentioned technical problems are solved according to the present invention by providing an inflatable bed, comprising a top sheet and a bottom sheet, which are disposed vertically at an interval, at least one side wall, at least one first tensioning structure, and at least one support structure.

An upper edge of said side wall is coupled to an outer edge of said top sheet. A lower edge of said side wall is coupled to an outer edge of said bottom sheet, and an air chamber is formed between said top sheet, said bottom sheet and said side wall.

The at least one first tensioning structure is arranged in said air chamber. An upper end and a lower end of said first tensioning structure are respectively coupled to said top sheet and said bottom sheet.

The at least one support structure is arranged in said air chamber. Said support structure is arranged in a longitudinal direction of at least one of said side walls. At least two outside edges of said support structure are respectively coupled to the side wall adjacent thereto, and at least one inside edge of said support structure is coupled to the top sheet or bottom sheet adjacent thereto.

Preferably, said support structure comprises a second tensioning structure and a third tensioning structure, at least two outside edges of said second tensioning structure are respectively coupled to the side wall adjacent thereto, and at least one inside edge of said second tensioning structure is coupled to the top sheet adjacent thereto.

The at least two outside edges of said third tensioning structure are respectively coupled to the side wall adjacent thereto, and at least one inside edge of said third tensioning structure is coupled to the bottom sheet adjacent thereto.

Preferably, said second tensioning structure and said third tensioning structure are respectively provided with a plurality of air holes, through which an airflow passage is formed in said air chamber.

Preferably, said second tensioning structure and said third tensioning structure are disposed at an interval in a perpendicular direction.

Preferably, said second tensioning structure comprises at least two first I-beams, an outside edge and an inside edge of each of said first I-beams, are respectively coupled to the side wall adjacent thereto and said top sheet, and the at least two first I-beams, are disposed at an interval.

Preferably, said third tensioning structure comprises at least two second I-beams, an outside edge and an inside edge of each of said second I-beams, are respectively coupled to the side wall adjacent thereto and said bottom sheet, and the at least two second I-beams, are disposed at an interval.

Preferably, said second tensioning structure comprises at least one first Y-beam, wherein two outside edges of said first Y-beam are respectively coupled to the side wall adjacent thereto, and an inside edge is coupled to said top sheet.

Preferably, said third tensioning structure comprises at least one second Y-beam, wherein two outside edges of said

second Y-beam are respectively coupled to the side wall adjacent thereto, and an inside edge is coupled to said bottom sheet.

Preferably, said second tensioning structure comprises at least one first tubular beam, which has at least two outside edges respectively coupled to the side wall adjacent thereto, and at least one inside edge is coupled to said top sheet.

Preferably, said third tensioning structure comprises at least one second tubular beam, which has at least two outside edges respectively coupled to the side wall adjacent thereto, and at least one inside edge is coupled to said bottom sheet.

Preferably, said second tensioning structure comprises at least one first V-beam, wherein two outside edges of said first V-beam are respectively coupled to the side wall adjacent thereto, and an inside edge is coupled to said top sheet.

Preferably, said third tensioning structure comprises at least one second V-beam, wherein two outside edges of said second V-beam are respectively coupled to the side wall adjacent thereto, and an inside edge is coupled to said bottom sheet.

Preferably, said at least two first I-beams are arranged spaced apart from each other at a lower surface of said top sheet.

Preferably, said at least two second I-beams are arranged spaced apart from each other at an upper surface of said bottom sheet.

Preferably, said at least two first I-beams are arranged at an interval on an inner surface of said side wall in a perpendicular direction.

Preferably, said at least two second I-beams are arranged at an interval on the inner surface of said side wall in a perpendicular direction.

Preferably, the two outside edges of said at least one first Y-beam is arranged at an interval on an inner surface of said side wall in a perpendicular direction.

Preferably, the two outside edges of said at least one second Y-beam are arranged at an interval on the inner surface of said side wall in a perpendicular direction.

Preferably, said at least two outside edges of said at least one first tubular beam, which are coupled to the side wall adjacent thereto, are arranged at an interval on an inner surface of said side wall in a perpendicular direction.

Preferably, said at least two outside edges of said at least one second tubular beam, which are coupled to the side wall adjacent thereto, are arranged at an interval on the inner surface of said side wall in a perpendicular direction.

Preferably, the two outside edges of said at least one first V-beam is arranged at an interval on an inner surface of said side wall in a perpendicular direction.

Preferably, the two outside edges of said at least one second V-beam is arranged at an interval on an inner surface of said side wall in a perpendicular direction.

Preferably, said at least two first I-beams as a whole are of a continuous annular structure or a segmental annular structure.

Preferably, said at least two second I-beams as a whole are of a continuous annular structure or a segmental annular structure.

Preferably, said at least one first Y-bam as a whole is of a continuous annular structure or a segmental annular structure.

Preferably, said at least one second Y-beam as a whole is of a continuous annular structure or a segmental annular structure.

Preferably, said at least one first tubular beam as a whole is of a segmental annular structure.

Preferably, said at least one second tubular beam as a whole is of a segmental annular structure.

Preferably, said at least one first V-bream as a whole is of a continuous annular structure or a segmental annular structure.

Preferably, said at least one second V-beam as a whole is of a continuous annular structure or a segmental annular structure.

Preferably, said first tensioning structure is one or more beams selected from I-beams, coil beams, Y-beams or X-beams.

Preferably, said first tensioning structure, said second tensioning structure and said third tensioning structure are all made of thermoplastic plastic sheet.

Preferably, one or more of said first tensioning structure, said second tensioning structure and said third tensioning structure at least partially comprise mesh, laminated plastic sheet or a threads.

Preferably, two side surfaces of said mesh or said threads are at least partially coupled integrally with two opposite plastic strips, and said mesh and said threads are sandwiched between the two opposite plastic strips.

Preferably, two side surfaces of said mesh or said threads are at least partially coupled integrally with an U-shaped plastic strip, and said mesh and said threads are sandwiched between the U-shaped plastic strip.

Preferably, said first tensioning structure is coupled to said top and bottom sheets by means of high-frequency welding; said second tensioning structure is coupled to said top sheet and said side wall by means of high-frequency welding; and said third tensioning structure is coupled to said bottom sheet and said side wall by means of high-frequency welding.

Preferably, the height where said top sheet is located in the inside part of an upper edge of said second tensioning structure is lower than the height where said top sheet is located in the outside part of the upper edge of said second tensioning structure.

Preferably, the height where said bottom sheet is located in the inside part of a lower edge of said third tensioning structure is lower than the height where said bottom sheet is located in the outside part of the lower edge of said third tensioning structure.

Preferably, said inflatable bed further comprises a built-in air pump, which is arranged on said side wall and is located between a lower edge of said second tensioning structure and an upper edge of said third tensioning structure for inflating said air chamber.

Preferably, said inflatable bed further comprises an air valve, which is arranged on said side wall for the inflation and deflation of said inflatable bed.

The positive effects of the present invention lie in the following aspects.

The inflatable bed of the present invention overcomes the defect of outward bulging and deformation of the side walls of the inflatable beds and inflatable mattresses having a relatively large height in prior art, making their appearance more attractive. The inflatable beds and inflatable mattresses have a good stability, which overcomes the problem of susceptibility of roll-over in the prior art. Furthermore, the inflatable bed of the present invention can also prevent the user from rolling down during use.

BRIEF DESCRIPTION OF THE DRAWINGS

The above-mentioned and other features, properties and advantages of the present invention will become more

apparent from the following description of embodiments with reference to the accompany drawings, in which:

FIG. **1** is a perspective view of an inflatable bed according to the present invention.

FIG. **2** is a front view of the inflatable bed according to the present invention.

FIG. **3** is a right view of the inflatable bed according to the present invention.

FIG. **4** is a top view of the inflatable bed according to the present invention.

FIG. **5** is a sectional view of a first embodiment taken along line A-A in FIG. **4**.

FIG. **6** is a schematic structural partially sectional view of the first embodiment of the inflatable bed according to the present invention.

FIG. **7** is a first exploded view of the first embodiment of the inflatable bed according to the present invention.

FIG. **8** is a second exploded view of the first embodiment of the inflatable bed according to the present invention.

FIG. **9** is a sectional view of a second embodiment taken along line A-A in FIG. **4**.

FIG. **10** is a first exploded view of the second embodiment of the inflatable bed according to the present invention.

FIG. **11** is a second exploded view of the second embodiment of the inflatable bed according to the present invention.

FIG. **12** is a first sectional view of a third embodiment taken along line A-A in FIG. **4**.

FIG. **13** is a second sectional view of the third embodiment taken along line A-A in FIG. **4**.

FIG. **14** is a first exploded view of the third embodiment of the inflatable bed according to the present invention.

FIG. **15** is a second exploded view of the third embodiment of the inflatable bed according to the present invention.

FIG. **16** is a sectional view of a fourth embodiment taken along line A-A in FIG. **4**.

FIG. **17** is a first exploded view of the fourth embodiment of the inflatable bed according to the present invention.

FIG. **18** is a second exploded view of the fourth embodiment of the inflatable bed according to the present invention.

FIG. **19** is a sectional view of a fifth embodiment taken along line A-A in FIG. **4**.

FIG. **20** is a schematic structural partially sectional view of the fifth embodiment of the inflatable bed according to the present invention.

FIG. **21** is a sectional view of a sixth embodiment taken along line A-A in FIG. **4**.

FIG. **22** is a sectional view of a seventh embodiment taken along line A-A in FIG. **4**.

FIG. **23** is a schematic structural partially sectional view of the seventh embodiment of the inflatable bed according to the present invention.

FIG. **24** is a schematic view of the interior structure of the seventh embodiment of the inflatable bed according to the present invention.

DETAILED DESCRIPTION

The present invention will be further described below in conjunction with detailed embodiments and the accompanying drawings. More details are provided in the following detailed description in order for the present invention to be fully understood. However, the present invention can be implemented in various ways other than those described herein. A person skilled in the art can make similar analogy and modification according to the practical applications without departing from the spirit of the present invention, and therefore the contents of the detailed embodiments herein should not be construed as limiting to the scope of the present invention.

Embodiment 1

FIG. **1** is a perspective view of an inflatable bed according to the present invention. FIG. **2** is a front view of the inflatable bed according to the present invention. FIG. **3** is a right view of the inflatable bed according to the present invention. FIG. **4** is a top view of the inflatable bed according to the present invention. FIG. **5** is a sectional view of a first embodiment taken along line A-A in FIG. **4**. FIG. **6** is a schematic structural partially sectional view of the first embodiment of the inflatable bed according to the present invention. FIG. **7** is an exploded view of the first embodiment of the inflatable bed according to the present invention.

As shown in FIGS. **1-7**, an inflatable bed **10** is disclosed in the first embodiment according to the present invention, which comprises a top sheet **11**, a bottom sheet **12**, at least one side wall **13**, at least one first tensioning structure **14** and at least one support structure. The bottom sheet **12** and the top sheet **11** are disposed vertically at an interval, an upper edge of the side wall **13** is coupled to an outer edge of the top sheet **11**, a lower edge of the side wall **13** is coupled to an outer edge of the bottom sheet **12**, and an air chamber is formed between the top sheet **11**, the bottom sheet **12** and the side wall **13**. Moreover, the first tensioning structure **14** is arranged in the air chamber, and an upper end and a lower end of the first tensioning structure **14** are respectively coupled to the top sheet **11** and the bottom sheet **12**. This has the effects of limiting the respective upward and downward bulging of the top sheet **11** and the bottom sheet **12** by means of the first tensioning structure **14** after said air chamber is inflated. In particular, both the top sheet **11** and the bottom sheet **12** may be configured as a two-layer structure, which can be formed with different patterns by mutually welding at least two sheets. Alternatively, a sponge structure is further sandwiched in the two-layer structure.

Said support structure is arranged in said air chamber herein, said support structure is arranged in the longitudinal direction of at least one of the side walls **13**, at least two outside edges of said support structure are respectively coupled to the side wall **13** adjacent thereto, and at least one inside edge of said support structure is coupled to the top sheet **11** or bottom sheet **12** adjacent thereto.

Preferably, said support structure comprises a second tensioning structure **15** and a third tensioning structure **16**. At least two outside edges of the second tensioning structure **15** are respectively coupled to the side wall **13** adjacent thereto, and at least one inside edge of the second tensioning structure is coupled to the top sheet **11** adjacent thereto. The second tensioning structure **15** is configured to limit the upward and lateral bulging of the top sheet **11** and the side wall **13** after said air chamber is inflated.

Moreover, at least two outside edges of the third tensioning structure **16** are respectively coupled to the side wall **13** adjacent thereto, and at least one inside edge of the third tensioning structure **16** is coupled to the adjacent bottom sheet **12**. The third tensioning structure **16** is configured to limit the respective downward and lateral bulging of the bottom sheet **12** and the side wall **13** after said air chamber is inflated.

In this embodiment, the second tensioning structure **15** comprises at least two first I-beams **151**, one outside edge **152** of each first I-beams **151** is coupled to the side wall **13** adjacent thereto, the other inside edge **153** is coupled to the

top sheet **11** adjacent thereto, and the at least two first I-beams **151** are disposed at an interval. The third tensioning structure **16** comprises at least two second I-beams **161**, one outside edge **162** of each second I-beam **161** is coupled to the side wall **13** adjacent thereto, the other inside edge **163** is coupled to the bottom sheet **12** adjacent thereto, and the at least two second I-beams **151** are disposed at an interval. In this embodiment, the numbers of first I-beams **151** and second I-beams **161** are both two by way of example, but their numbers are not limited by this embodiment, and may be more than two, which also fall within the scope of protection of the present invention.

The second tensioning structure **15** and the third tensioning structure **16** are preferably disposed at an interval in a perpendicular direction. In this embodiment, for example, the second tensioning structure **15** and the third tensioning structure **16** divide the respective side wall **13** into five sections, so that the second tensioning structure **15** is configured to limit the upward and lateral bulging of the top sheet **11** and the side wall **13** after said air chamber is inflated, and the third tensioning structure **16** is configured to limit the respective downward and lateral bulging of the bottom sheet **12** and the side wall **13** after said air chamber is inflated.

Of course, the second tensioning structure **15** and the third tensioning structure **16** may also divide the respective side wall **13** into a multi-section structure, such as a four- or six-section structure; this embodiment is merely exemplary and the present invention is not limited thereto, and all the structures with four or more sections fall within the scope of protection of the present invention.

Further, the at least two first I-beams **151** are arranged spaced apart from each other at a lower surface of the top sheet **11** and the at least two second I-beams **161** are arranged spaced apart from each other at an upper surface of the bottom sheet **12**. The at least two first I-beams **151** are arranged at an interval on an inner surface of the side wall **13** in a perpendicular direction. The at least two second I-beams **161** are arranged at an interval on the inner surface of the side wall **13** in a perpendicular direction.

Furthermore, the at least two first I-beams **151** as a whole are of a continuous annular structure or a segmental annular structure. The at least two second I-beams **161** as a whole are of a continuous annular structure or a segmental annular structure. Moreover, the at least two first I-beams **151** are provided with air holes **154**, and an airflow passage is formed in said air chamber through the air holes **154**. The at least two second I-beams **161** are provided with air holes **164**, and an airflow passage is formed in said air chamber through the air holes **164** (as shown in FIGS. **7** and **8**).

The first tensioning structure **14** of the present invention may employ one or more beams selected from I-beams, coil beams, Y-beams or X-beams. Moreover, the first tensioning structure **14**, the second tensioning structure **15** and the third tensioning structure **16** may be all made of thermoplastic plastic sheet, and one or more of the first tensioning structure **14**, the second tensioning structure **15** and the third tensioning structure **16** at least partially comprise mesh, laminated plastic sheet or threads.

The structures thereof may take various forms. For example, two side surfaces of said mesh or said threads are at least partially coupled integrally with two opposite s plastic strips, and said mesh and said threads are sandwiched between the two opposite plastic strips.

As another example, two side surfaces of said mesh for said threads are at least partially coupled integrally with an U-shaped plastic strip, and said mesh and said threads are sandwiched between the U-shaped plastic strip. These connecting structures can be used to effectively manufacture the beams required by the inflatable bed in the present invention; the solution in this embodiment is merely exemplary and the present invention is not limited thereto, and any other structure, which can implement the beam, falls within the scope of protection of the present invention.

On the basis of the structure of the above beams, in order to ensure a firm connection between the components, the first tensioning structure **14** is coupled to the top sheet **11** and the bottom sheet **12** by means of high-frequency welding. Similarly, the second tensioning structure **15** is coupled to the top sheet **11** and the side wall **13** by means of high-frequency welding. The third tensioning structure **16** is coupled to the bottom sheet **12** and the side wall **13** by means of high-frequency welding.

In the inflatable bed of the present invention formed of the aforementioned structure, the height where the top sheet **11** thereof is located in the inside part of an upper edge of the second tensioning structure **15** is lower than the height where the top sheet **11** is located in the outside part of the upper edge of the second tensioning structure **15**. The height where the bottom sheet **12** is located in the inside part of a lower edge of the third tensioning structure **16** is lower than the height where the bottom sheet **12** is located in the outside part of the lower edge of the third tensioning structure **16**.

Furthermore, the inflatable bed **10** further comprises a built-in air pump **20**, and the built-in air pump **20** is arranged on the side wall **13** and is located between a lower edge of the second tensioning structure **15** and an upper edge of the third tensioning structure **16** for inflating said air chamber. Moreover, the inflatable bed **10** further comprises an air valve **30**, and the air valve **30** is arranged on the side wall **13** for the inflation and deflation of the inflatable bed **10**.

Embodiment 2

FIG. **9** is a sectional view of a second embodiment taken along line A-A in FIG. **4**. FIG. **10** is a first exploded view of the second embodiment of the inflatable bed of the present invention. FIG. **11** is a second exploded view of the second embodiment of the inflatable bed of the present invention.

As shown in FIGS. **9-11**, the structure of this embodiment is substantially the same as that of the first embodiment, except that the second tensioning structure **15** comprises at least one first Y-beam **151**, wherein two outside edges **152** of the first Y-beam **151** are respectively coupled to the side wall **13** adjacent thereto, and the other inside edge **153** is coupled to the top sheet **11**. Similarly, the third tensioning structure **16** comprises at least one second Y-beam **161**, wherein two outside edges **162** of the second Y-beam **161** are respectively coupled to the side wall **13** adjacent thereto, and the other inside edge **163** is coupled to the bottom sheet **12**.

The second tensioning structure **15** and the third tensioning structure **16** are preferably disposed at an interval in a perpendicular direction. In this embodiment, the second tensioning structure **15** and the third tensioning structure **16** divide the respective side wall **13** into five sections, so that the second tensioning structure **15** is configured to limit the upward and lateral bulging of the top sheet **11** and the side wall **13** after said air chamber is inflated, and the third tensioning structure **16** is configured to limit the respective downward and lateral bulging of the bottom sheet **12** and the side wall **13** after said air chamber is inflated.

Of course, the second tensioning structure **15** and the third tensioning structure **16** may also divide the respective side

wall **13** into a multi-section structure, such as a four- or six-section structure; this embodiment is merely exemplary and the present invention is not limited thereto, and all the structures with four or more sections fall within the scope of protection of the present invention.

Further, the two outside edges **152** of the at least one first Y-beam **151** are arranged at an interval on an inner surface of the side wall **13** in a perpendicular direction. The two outside edges **162** of the at least one second Y-beam **161** are arranged at an interval on the inner surface of the side wall **13** in a perpendicular direction.

Furthermore, the at least one first Y-beam **151** as a whole is of a continuous annular structure or a segmental annular structure. The at least one second Y-beam **161** as a whole is of a continuous annular structure or a segmental annular structure. Moreover, the at least one first Y-beam **151** is further provided with air holes **154**, and an airflow passage is formed in said air chamber through the air holes **154**. The at least one second Y-beam **161** is further provided with air holes **164**, and an airflow passage is formed in said air chamber through the air holes **164** (as shown in FIGS. **10** and **11**).

Embodiment 3

FIG. **12** is a first sectional view of a third embodiment taken along line A-A in FIG. **4**. FIG. **13** is a second sectional view of the third embodiment taken along line A-A in FIG. **4**. FIG. **14** is a first exploded view of the third embodiment of the inflatable bed of the present invention. FIG. **15** is a second exploded view of the third embodiment of the inflatable bed of the present invention.

As shown in FIGS. **12-15**, the structure of this embodiment is substantially the same as that of the first embodiment, except that the second tensioning structure **15** comprises at least one first tubular beam **151**, wherein the first tubular beam **151** has at least two outside edges **152** respectively coupled to the side wall **13** adjacent thereto, and at least one inside edge **153** is coupled to the top sheet **11**. The third tensioning structure **16** comprises at least one second tubular beam **161**, wherein the second tubular beam **161** has at least two outside edges **162** respectively coupled to the side wall **13** adjacent thereto, and at least one inside edge **163** is coupled to the bottom sheet **12**. The first tubular beam **151** and the second tubular beam **161** herein may be of various tubular structures, such as a triangular tubular structure, or a quadrilateral tubular structure (as shown in FIGS. **13** and **14**).

Beam **151**, which are coupled to the wall **13** adjacent thereto, are arranged at an interval on an inner surface of the side wall **13** in a perpendicular direction. The at least two outside edges **162** of the at least one second tubular beam **161**, which are coupled to the wall **13** adjacent thereto, are arranged at an interval on an inner surface of the side wall **13** in a perpendicular direction.

The at least one first tubular beam **151** herein as a whole is of a segmental annular structure. The at least one second tubular beam **161** as a whole is of a segmental annular structure (as shown in FIGS. **13** and **14**).

The second tensioning structure **15** and the third tensioning structure **16** are preferably disposed at an interval in a perpendicular direction. In this embodiment, the second tensioning structure **15** and the third tensioning structure **16** divide the respective side wall **13** into five sections, so that the second tensioning structure **15** is configured to limit the upward and lateral bulging of the top sheet **11** and the side wall **13** after said air chamber is inflated, and the third tensioning structure **16** is configured to limit the respective downward and lateral bulging of the bottom sheet **12** and the side wall **13** after said air chamber is inflated.

Of course, the second tensioning structure **15** and the third tensioning structure **16** may also divide the respective side wall **13** into a multi-section structure, such as a four- or six-section structure; this embodiment is merely exemplary and the present invention is not limited thereto, and all the structures with four or more sections fall within the scope of protection of the present invention.

Embodiment 4

FIG. **16** is a sectional view of a fourth embodiment taken along line A-A in FIG. **4**. FIG. **17** is a first exploded view of the fourth embodiment of the inflatable bed of the present invention. FIG. **18** is a second exploded view of the fourth embodiment of the inflatable bed of the present invention.

As shown in FIGS. **16-18**, the structure of this embodiment is substantially the same as that of the first embodiment, except that the second tensioning structure **15** comprises at least one first V-beam **151**, wherein two outside edges **152** of the first V-beam **151** are respectively coupled to the side wall **13** adjacent thereto, and the other inside edge **153** is coupled to the top sheet **11**. The third tensioning structure **16** comprises at least one second V-beam **161**, wherein two outside edges **162** of the second V-beam **161** are respectively coupled to the side wall **13** adjacent thereto, and the other inside edge **163** is coupled to the top sheet **11**.

Further, the two outside edges **152** of the at least one first V-beam **151** are arranged at an interval on an inner surface of the side wall **13** in a perpendicular direction. The two outside edges **162** of the at least one second VV-beam **161** are arranged at an interval on the inner surface of the side wall **13** in a perpendicular direction.

Furthermore, the at least one first V-beam **151** as a whole is of a continuous annular structure or a segmental annular structure. The at least one second V-beam **161** as a whole is of a continuous annular structure or a segmental annular structure. Moreover, the at least one first V-beam **151** is provided with air holes **154**, and an airflow passage is formed in said air chamber through the air holes **154**. The at least one second V-shaped drawstring V-beam **161** is provided with air holes **164**, and an airflow passage is formed in said air chamber through the air holes **164**.

The second tensioning structure **15** and the third tensioning structure **16** are preferably disposed at an interval in a perpendicular direction. In this embodiment, the second tensioning structure **15** and the third tensioning structure **16** divide the respective side wall **13** into five sections, so that the second tensioning structure **15** is configured to limit the upward and lateral bulging of the top sheet **11** and the side wall **13** after said air chamber is inflated, and the third tensioning structure **16** is configured to limit the respective downward and lateral bulging of the bottom sheet **12** and the side wall **13** after said air chamber is inflated.

Of course, the second tensioning structure **15** and the third tensioning structure **16** may also divide the respective side wall **13** into a multi-section structure, such as a four- or six-section structure; this embodiment is merely exemplary and the present invention is not limited thereto, and all the structures with four or more sections fall within the scope of protection of the present invention.

Embodiment 5

FIG. **19** is a sectional view of a fifth embodiment taken along line A-A in FIG. **4**. FIG. **20** is a schematic structural

partially sectional view of the fifth embodiment of the inflatable bed of the present invention.

As shown in FIGS. **19** and **20**, the structure of this embodiment is substantially the same as that of the first embodiment, except that the first tensioning structure **14** employs a Y-beam, and the upper and lower ends of the first tensioning structure **14** are respectively coupled to the top sheet **11** and the bottom sheet **12**. Several beams in the first tensioning structure **14** are arranged spaced apart from each other. The upper end of each beam of the first tensioning structure **14** takes the form of a fork and is coupled to and supports the top sheet **11**, and the lower end takes the form of an I-beam and is downwardly coupled to the bottom sheet **12**. After said air chamber is inflated, such a structure can effectively limit the respective upward and downward bulging of the top sheet **11** and the bottom sheet **12**.

Embodiment 6

FIG. **21** is a sectional view of a sixth embodiment taken along line A-A in FIG. **4**.

As shown in FIG. **21**, the structure of this embodiment is substantially the same as that of the fifth embodiment, except that the first tensioning structure **14** employs an X-shaped drawstring at the upper and lower ends, and the upper and lower ends of the first tensioning structure **14** are respectively coupled to the top sheet **11** and the bottom sheet **12**. Several drawstrings in the first tensioning structure **14** are arranged spaced apart from each other. The upper end of each drawstring of the first tensioning structure **14** takes the form of a folk and is upwardly coupled to the top sheet **11**, and the lower end also takes the form of a folk and is downwardly coupled to the bottom sheet **12**. After said air chamber is inflated, such a structure can limit the respective upward and downward bulging of the top sheet **11** and the bottom sheet **12** more effectively.

Embodiment 7

FIG. **22** is a sectional view of a seventh embodiment taken along line A-A in FIG. **4**. FIG. **23** is a schematic structural partially sectional view of the seventh embodiment of the inflatable bed of the present invention. FIG. **24** is a schematic view of the interior structure of the seventh embodiment of the inflatable bed of the present invention.

As shown in FIGS. **22-24**, the structure of this embodiment is substantially the same as that of the first embodiment, except that all the drawstrings in the first tensioning structure **14** employ coil beams, and the upper and lower ends of each beam of the first tensioning structure **14** are respectively coupled to the top sheet **11** and the bottom sheet **12**. Several beams in the first tensioning structure **14** are arranged spaced apart from each other. After said air chamber is inflated, this structure can effectively limit the respective upward and downward bulging of the top sheet **11** and the bottom sheet **12**.

According to the description of the aforementioned structures, the structural variations in the embodiments may arbitrarily combined, and are not limited to the particular embodiments described above, i.e., the number of beams contained in the second tensioning structure **15** and the number of beams contained in the third tensioning structure **16** are unlimited, which can be adjusted according to actual requirements.

Similarly, the connection between the beams in the second tensioning structure **15** and the connection between the beams in the third tensioning structure **16** are also not limited to the aforementioned embodiments, as long as the side wall **13** is divided into at least five (or equal to or greater than four) sections, for example, the number of beams in the second tensioning structure **15** and that in the third tensioning structure **16** as well as the connection thereof can be changed so as to divide the side wall **13** into multiple sections such as six or seven sections.

Of course, the structures of the first tensioning structure **14** can be commonly used in each case, and likewise serve to support the top sheet **11** and the bottom sheet **12**, effectively limiting the respective upward and downward bulging of the top sheet **11** and the bottom sheet **12**.

In summary, the inflatable bed of the present invention can limit the outward bulging or deformation of the side wall of the inflatable bed by using various types of tensioning structures. The structure of the inflatable bed of the present invention effectively overcomes the defect of outward bulging and deformation of the side walls of the inflatable beds and inflatable mattresses having a relatively large height in prior art, making their appearance more attractive. The inflatable beds and inflatable mattresses have a good stability, which overcomes the problem of susceptibility of rollover in the prior art. Furthermore, the inflatable bed of the present invention can also prevent the user from rolling down during use.

While the particular embodiments of the present invention have been described, a person skilled in the art should understand that these are merely illustrative, and that the scope of protection of the present invention is defined by the appended claims. Various alterations or modifications can be made by a person skilled in the art to these embodiments without departing from the principle and substance of the present invention; however, these alterations and modifications all fall within the scope of protection of the invention.

What is claimed is:

1. An inflatable bed, comprising:

a top sheet and a bottom sheet disposed vertically at an interval;

at least one side wall, an upper edge of said side wall being coupled to an outer edge of said top sheet, a lower edge of said side wall being coupled to an outer edge of said bottom sheet, an air chamber formed between said top sheet, said bottom sheet and said side wall;

at least one first tensioning structure disposed in said air chamber, an upper end and a lower end of said first tensioning structure being respectively coupled to said top sheet and said bottom sheet; and

at least one support structure disposed in said air chamber, said support structure being disposed in a longitudinal direction of at least one of said side walls, at least two outside edges of said support structure being respectively coupled to the side wall adjacent, at least one inside edge of said support structure being coupled to the top sheet or bottom sheet adjacent;

wherein said support structure comprises a second tensioning structure and a third tensioning structure, at least two outside edges of said second tensioning structure are respectively coupled to said at least one side wall, at least one inside edge of said second tensioning structure is coupled to said top sheet; and

wherein at least two outside edges of said third tensioning structure are respectively coupled to said at least one side wall, at least one inside edge of said third tensioning structure is coupled to said bottom sheet.

2. The inflatable bed according to claim **1**, wherein said second tensioning structure and said third tensioning struc-

ture are respectively provided with a plurality of air holes, through which an airflow passage is formed in said air chamber.

3. The inflatable bed according to claim **1**, wherein said second tensioning structure and said third tensioning structure are disposed at an interval.

4. The inflatable bed according to claim **1**, wherein said second tensioning structure comprises at least two first I-beams, an outside edge and an inside edge of each of said first I-beams are respectively coupled to said side wall and said top sheet adjacent, the at least two first I-beams are disposed at an interval.

5. The inflatable bed according to claim **4**, wherein said at least two first I-beams are spaced apart from each other at a lower surface of said top sheet.

6. The inflatable bed according to claim **4**, wherein said at least two first I-beams are disposed at an interval on an inner surface of said side wall.

7. The inflatable bed according to claim **4**, wherein said at least two first I-beams as a whole are of a continuous annular structure or a segmental annular structure.

8. The inflatable bed according to claim **1**, wherein said third tensioning structure comprises at least two second I-beams, an outside edge and an inside edge of each of said second I-beams are respectively coupled to the side wall and said bottom sheet adjacent, the at least two second I-beams are disposed at an interval.

9. The inflatable bed according to claim **8**, wherein said at least two second I-beams are spaced apart from each other at an upper surface of said bottom sheet.

10. The inflatable bed according to claim **8**, wherein said at least two second are disposed at an interval on the inner surface of said side wall.

11. The inflatable bed according to claim **8**, wherein said at least two second I-beam as a whole are of a continuous annular structure or a segmental annular structure.

12. The inflatable bed according to claim **1**, wherein said first tensioning structure, said second tensioning structure and said third tensioning structure are all made of thermoplastic plastic sheet.

13. The inflatable bed according to claim **1**, wherein one or more of said first tensioning structure, said second tensioning structure and said third tensioning structure at least partially comprise mesh, laminated plastic sheet or a threads.

14. The inflatable bed according to claim **13**, wherein two side surfaces of said mesh or said threads are at least partially coupled integrally with two opposite plastic strips, said mesh and said threads are sandwiched between the two opposite plastic strips.

15. The inflatable bed according to claim **13**, wherein two side surfaces of said mesh or said threads are at least partially coupled integrally with an U-shaped plastic strip, said mesh and said threads are sandwiched between the U-shaped plastic strip.

16. The inflatable bed according to claim **1**, wherein said first tensioning structure is coupled to said top and bottom sheets by means of high-frequency welding; said second tensioning structure is coupled to said top sheet and said side wall by means of high-frequency welding; and said third tensioning structure is coupled to said bottom sheet and said side wall by means of high-frequency welding.

17. The inflatable bed according to claim **1**, wherein a location where said top sheet is located in the inside part of an upper edge of said second tensioning structure is lower than the location where said top sheet is located in the outside part of the upper edge of said second tensioning structure.

18. The inflatable bed according to claim **1**, wherein a location where said bottom sheet is located in the inside part of a lower edge of said third tensioning structure is lower than a location where said bottom sheet is located in the outside part of the lower edge of said third tensioning structure.

19. The inflatable bed according to claim **1**, wherein said inflatable bed further comprises a built-in air pump, which is disposed on said side wall and is located between a lower edge of said second tensioning structure and an upper edge of said third tensioning structure for inflating said air chamber.

20. The inflatable bed according to claim **1**, wherein said inflatable bed further comprises an air valve, which is disposed on said side wall for the inflation and deflation of said inflatable bed.

* * * * *