US008562773B2

(12) **United States Patent**
Lin et al.

(10) **Patent No.: US 8,562,773 B2**
(45) **Date of Patent: Oct. 22, 2013**

(54) **METHOD OF PRODUCING AN INTERNAL TENSIONING STRUCTURE USEABLE WITH INFLATABLE DEVICES**

(71) Applicant: **Intex Recreation Corp.**, Long Beach, CA (US)

(72) Inventors: **Hua Hsiang Lin**, Fujian (CN); **Yaw Yuan Hsu**, Fujian (CN)

(73) Assignee: **Intex Recreation Corporation**, Long Beach, CA (US)

(*) Notice: Subject to any disclaimer, the term of this patent is extended or adjusted under 35 U.S.C. 154(b) by 0 days.

(21) Appl. No.: **13/668,799**

(22) Filed: **Nov. 5, 2012**

(65) **Prior Publication Data**

US 2013/0228268 A1 Sep. 5, 2013

Related U.S. Application Data

(63) Continuation of application No. PCT/US2012/042079, filed on Jun. 12, 2012.

(30) **Foreign Application Priority Data**

Mar. 2, 2012 (CN) 2012 1 0053146
Mar. 2, 2012 (CN) 2012 1 0053183
Mar. 2, 2012 (CN) ..... 2012 2 0075738 U
Mar. 2, 2012 (CN) ..... 2012 2 0075742 U

(51) **Int. Cl.**
B29C 70/52 (2006.01)

(52) **U.S. Cl.**
USPC **156/166**; 156/179; 5/711

(58) **Field of Classification Search**
USPC 156/166, 272.2, 158, 163, 178, 179, 156/308.2, 434, 439, 440; 5/681, 727, 728, 5/729, 158, 711, 710, 712; 139/410
See application file for complete search history.

(56) **References Cited**

U.S. PATENT DOCUMENTS

818,321	A	4/1906	Whall	
2,753,573	A	7/1956	Barker	
3,008,213	A	11/1961	Foster et al.	
3,573,151	A *	3/1971	Dawbarn	428/108
4,295,918	A *	10/1981	Benson et al.	156/434
5,249,323	A	10/1993	Kikuchi et al.	
5,985,071	A *	11/1999	Wynne et al.	156/181
6,543,962	B2 *	4/2003	Wells	404/118
7,254,853	B1	8/2007	Kim	
7,591,036	B2	9/2009	Lin et al.	

* cited by examiner

Primary Examiner — Katarzyna Wyrozebski Lee
Assistant Examiner — Vishal I Patel
(74) *Attorney, Agent, or Firm* — Faegre Baker Daniels LLP

(57) **ABSTRACT**

An internal tensioning structure for use in an inflatable product fulfills the basic function of maintaining two adjacent inflatable surfaces in a desired geometric arrangement when the inflatable product is pressurized. The tensioning structure is formed by connecting a pair of plastic strips sheets via spaced-apart strands, such as strings or wires. When pulled taut, the strands provide a high tensile strength between the two opposed plastic strips. At the same time, the plastic strips facilitate a strong, long-lasting weld between the tensioning structure and the inflatable product.

5 Claims, 28 Drawing Sheets

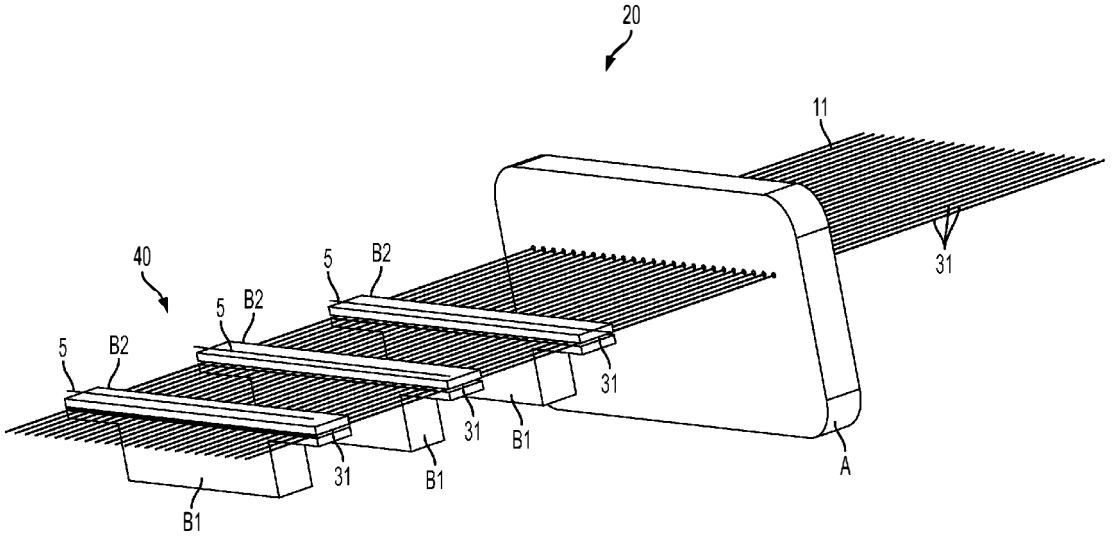

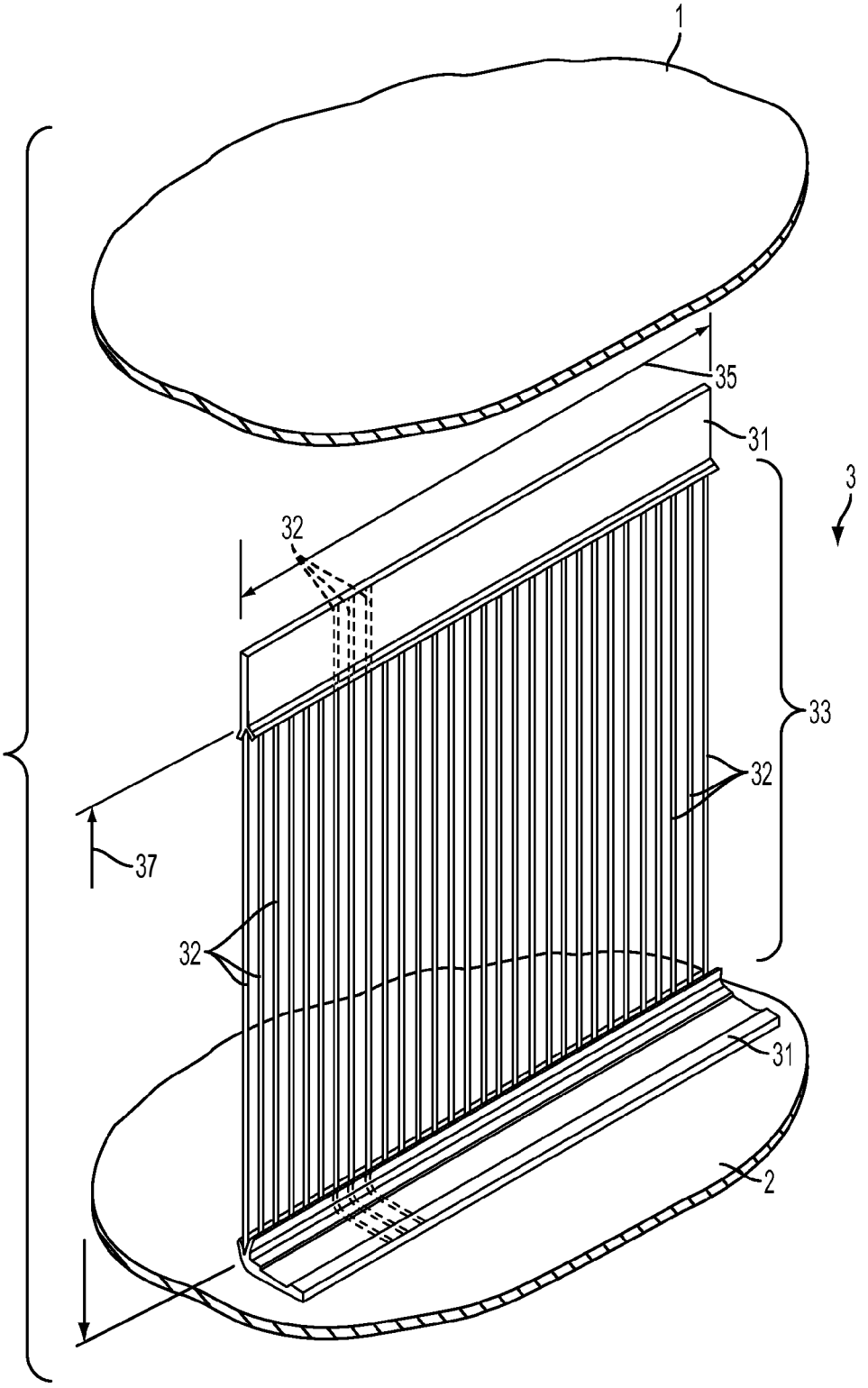

FIG. 1

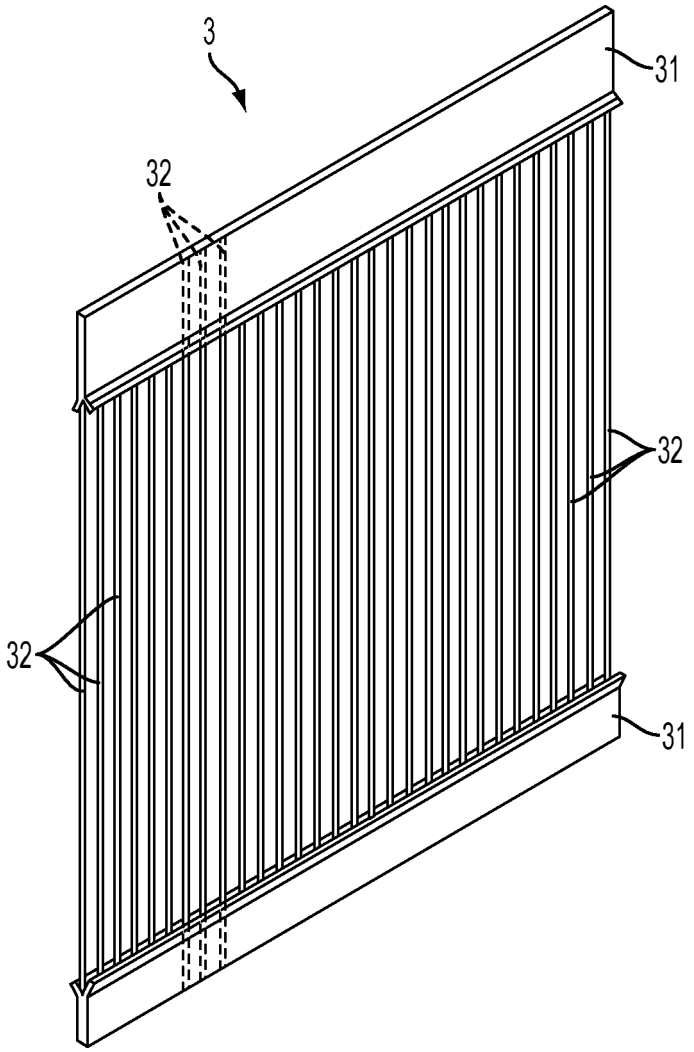

FIG. 2

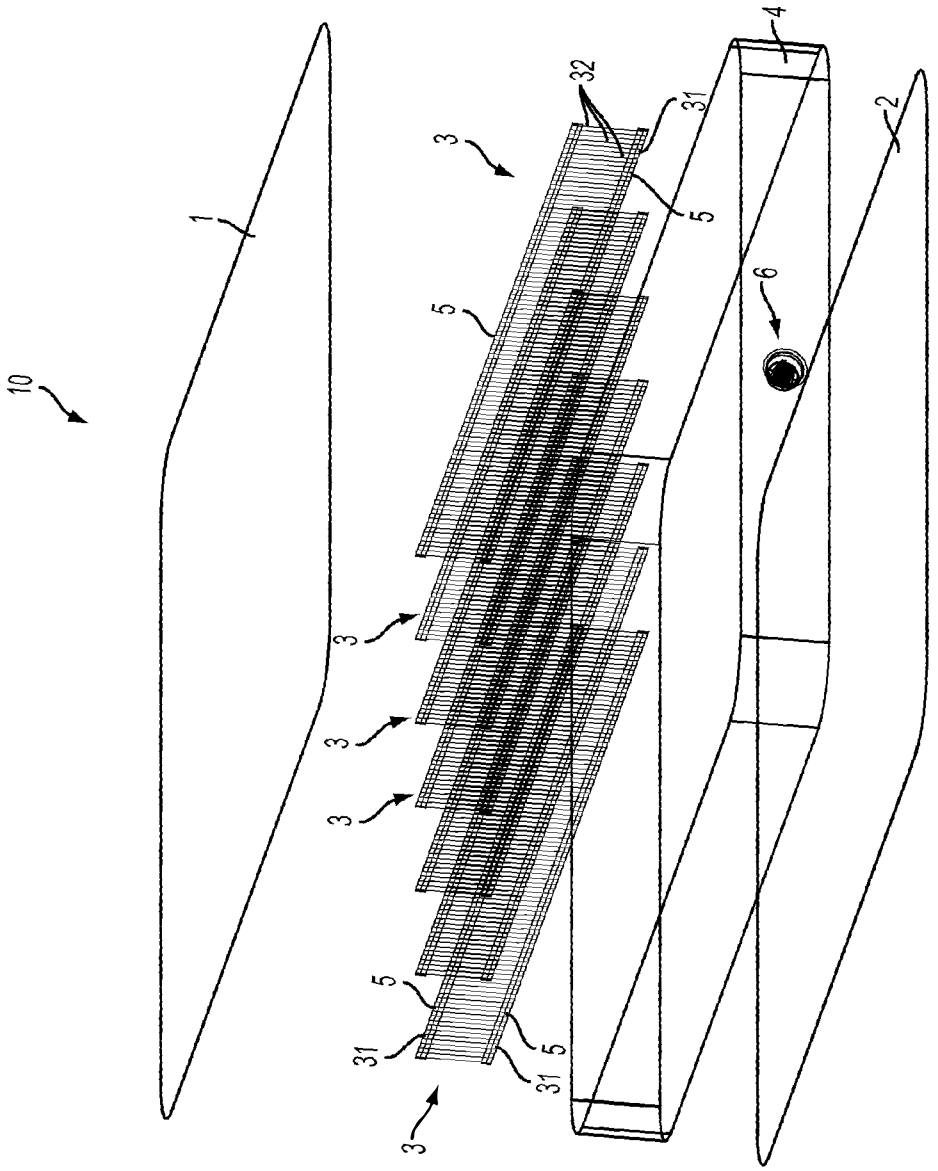

FIG. 3

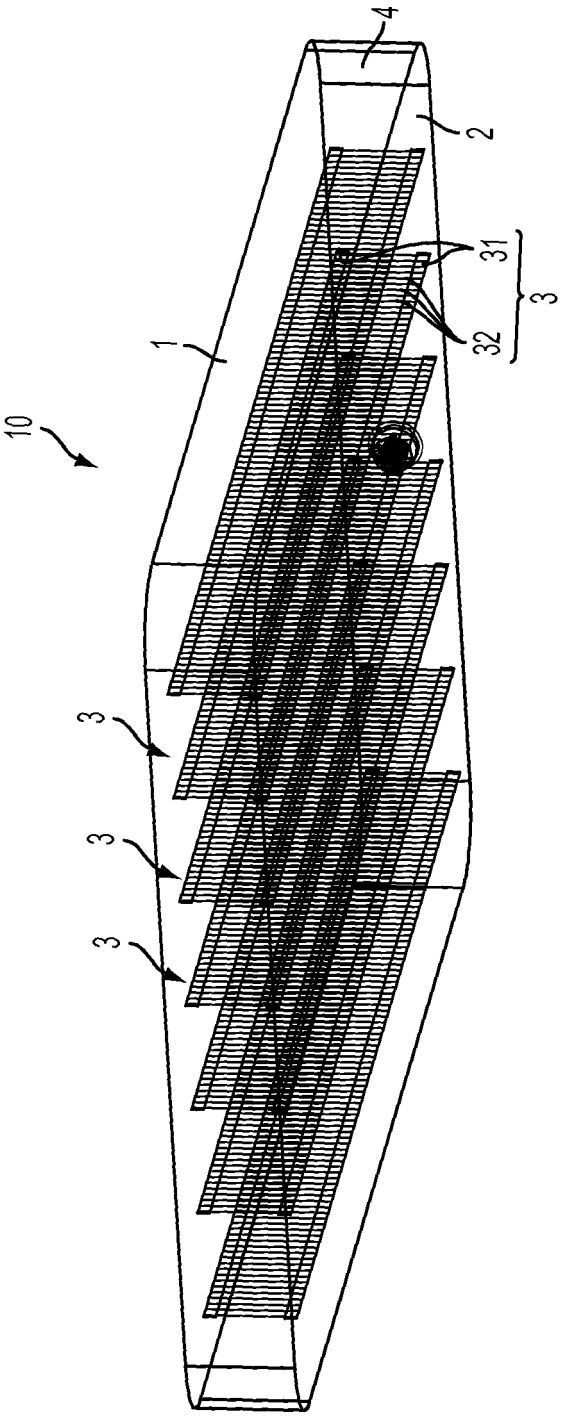

FIG. 4

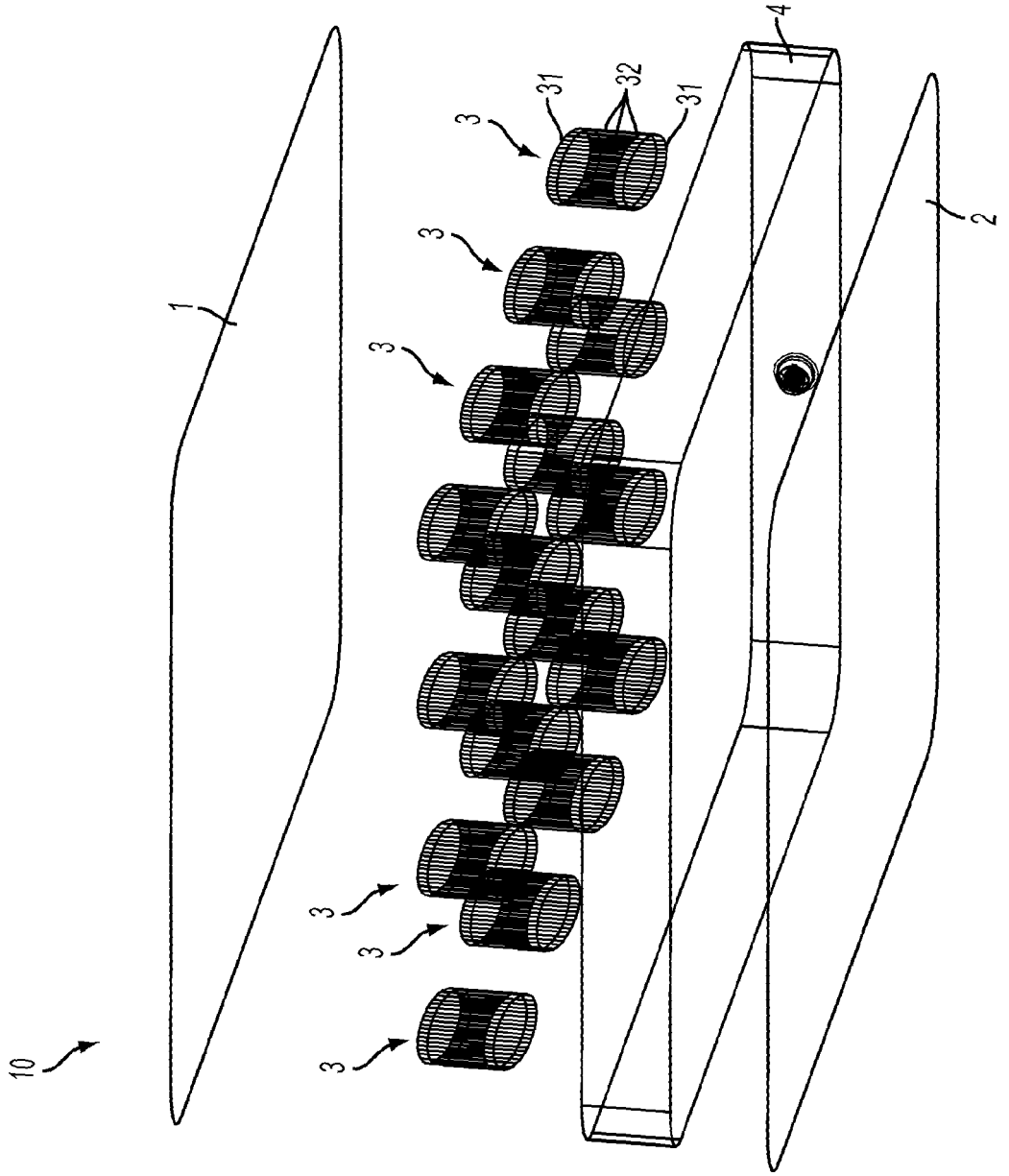

FIG. 5

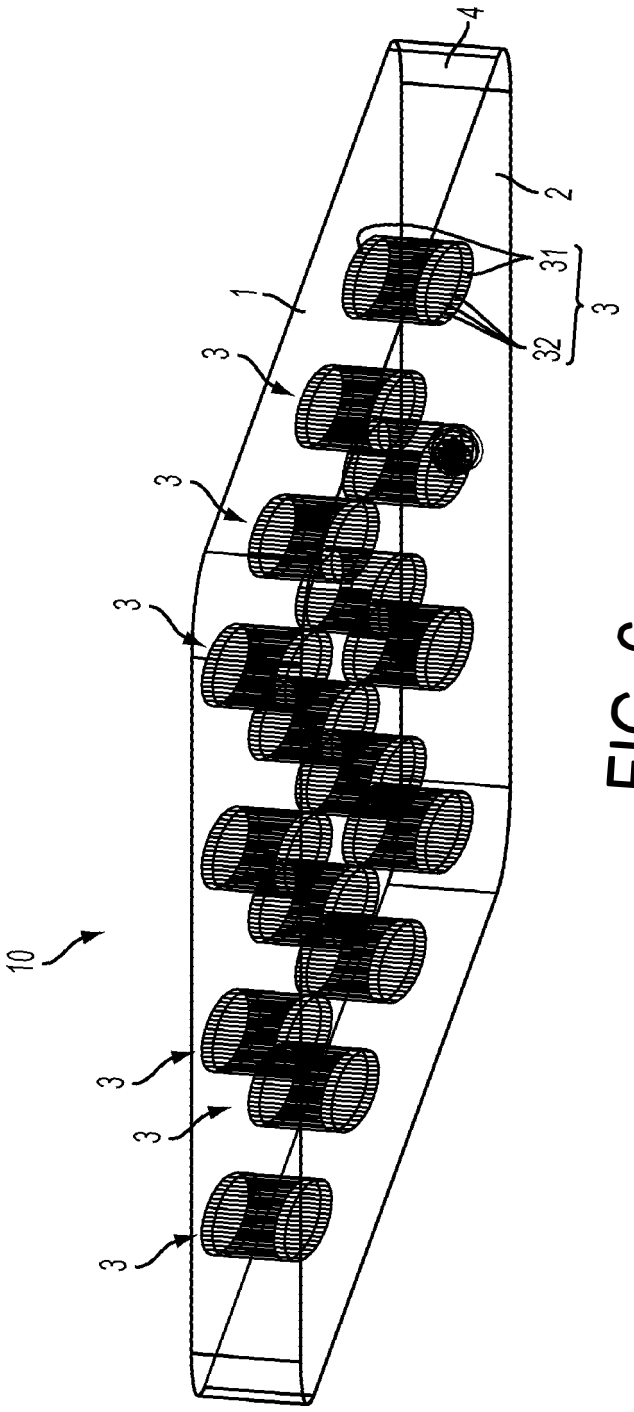

FIG. 6

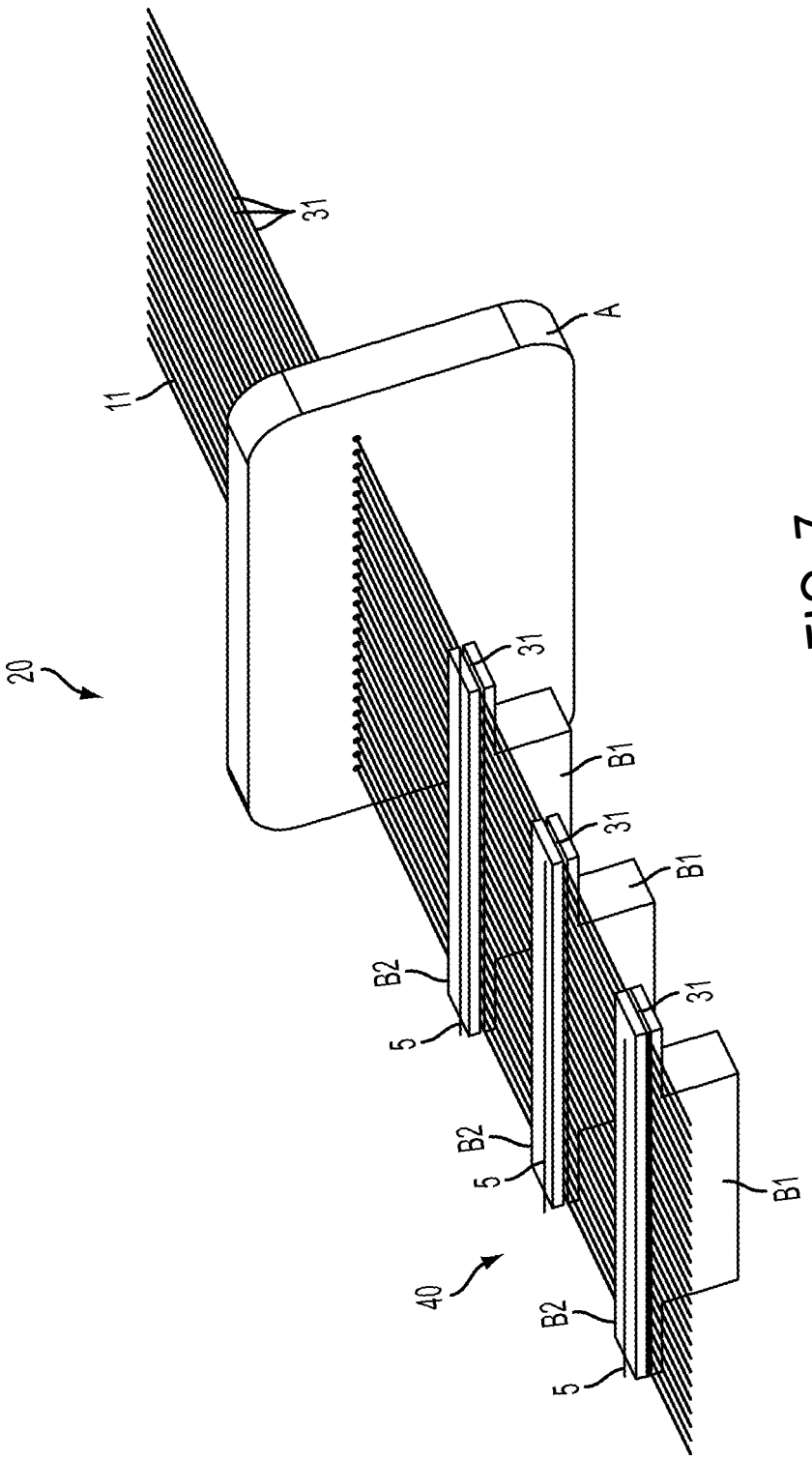

FIG. 7

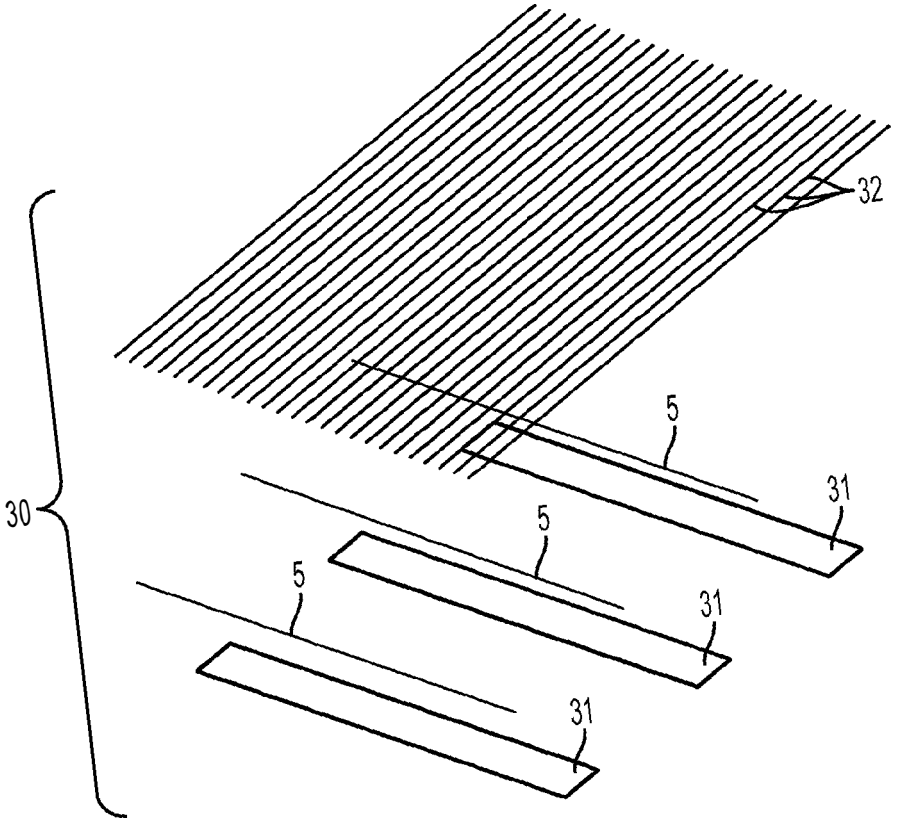

FIG. 8

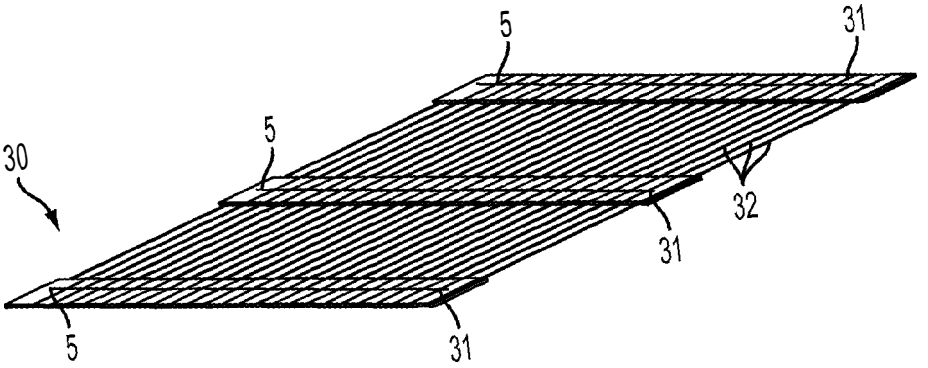

FIG. 9

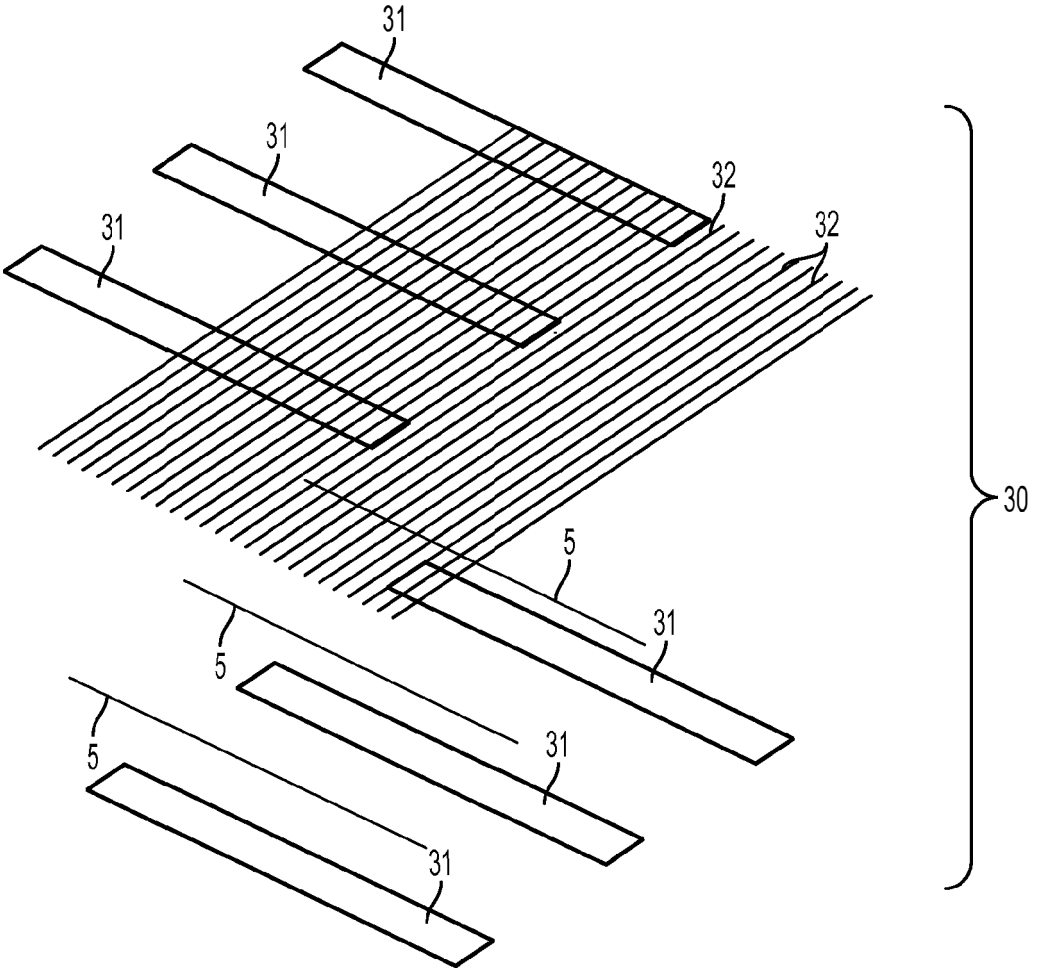

FIG. 10

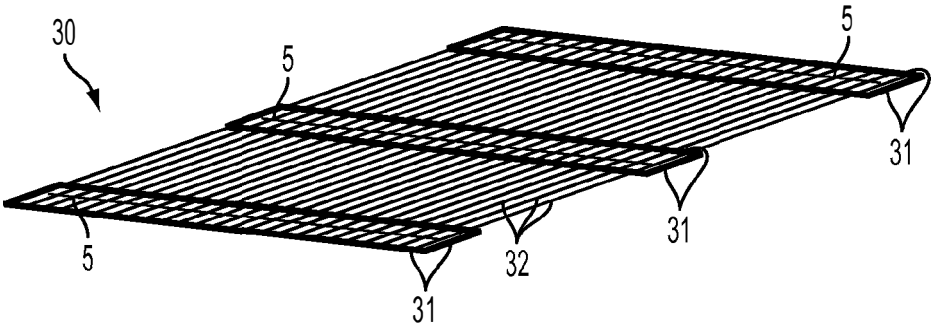

FIG. 11

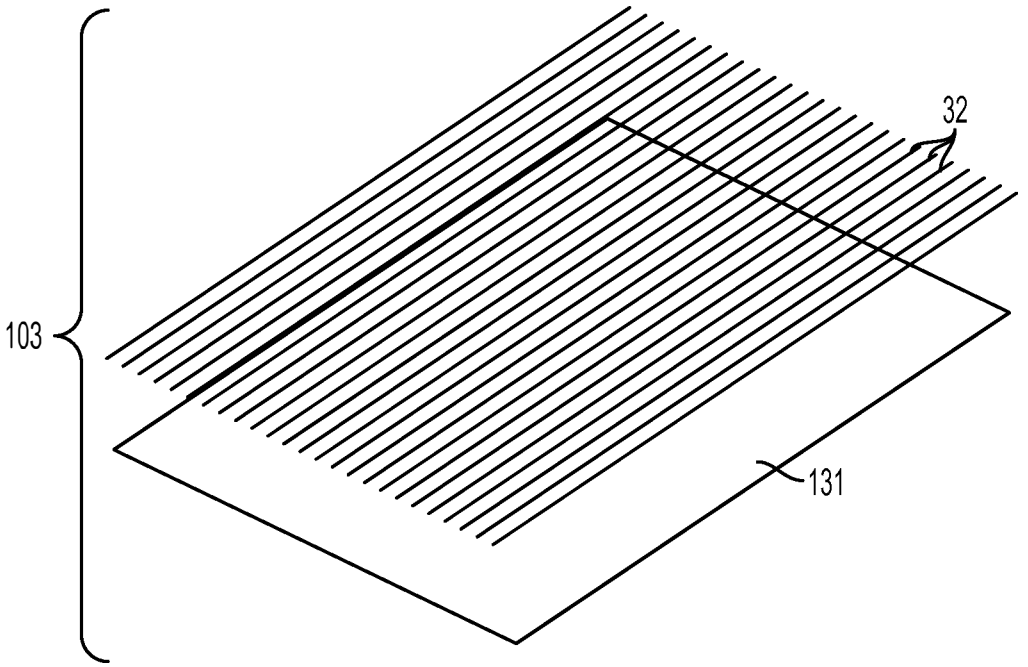

FIG. 12

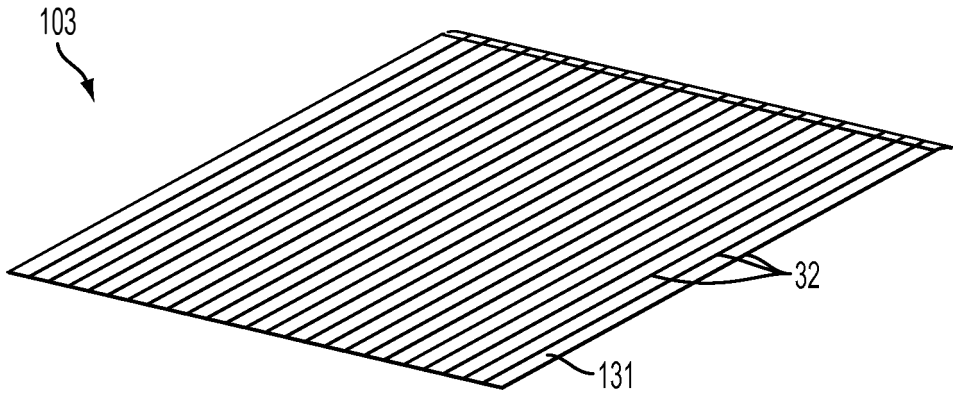

FIG. 13

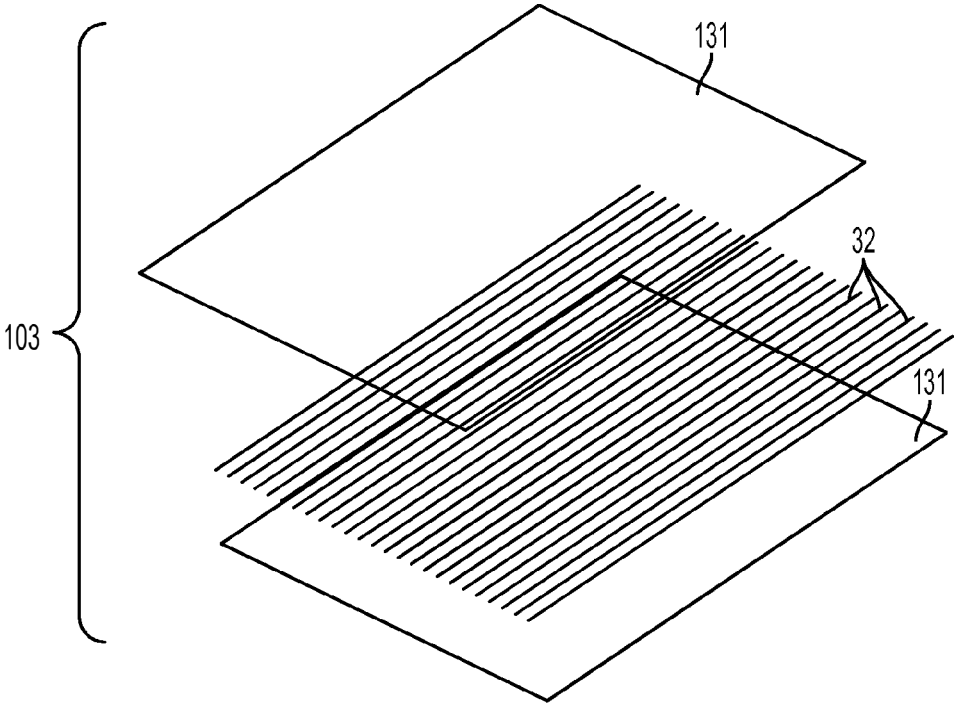

FIG. 14

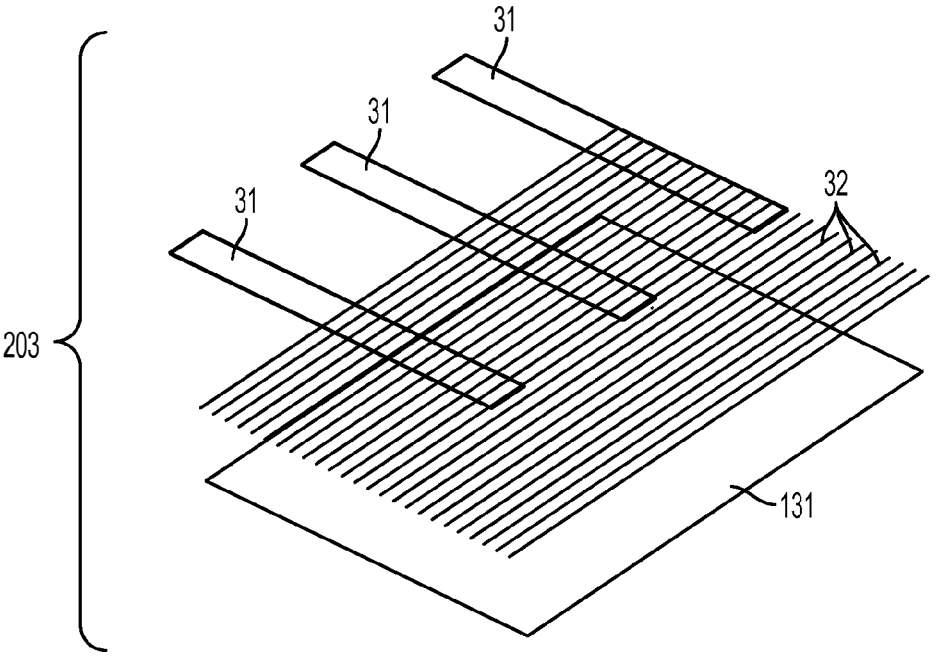

FIG. 15

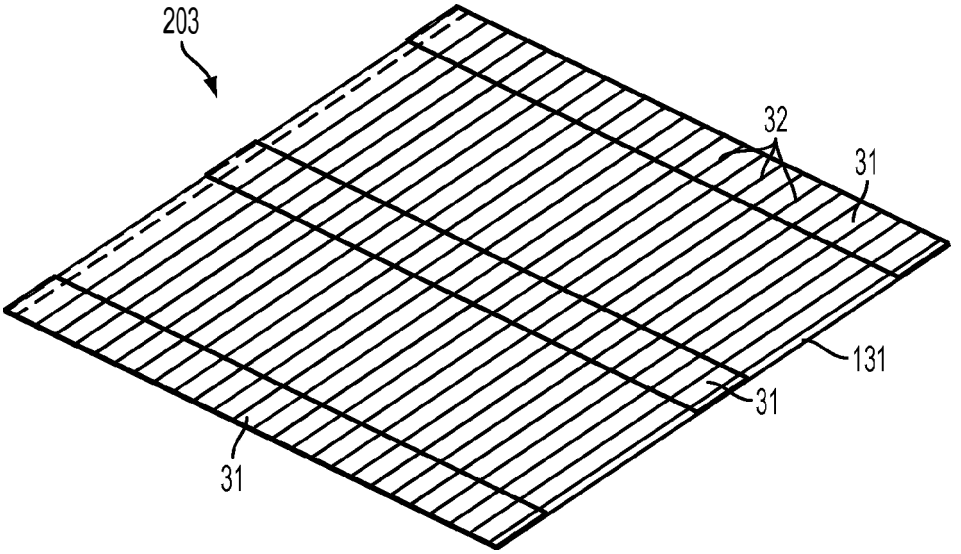

FIG. 16

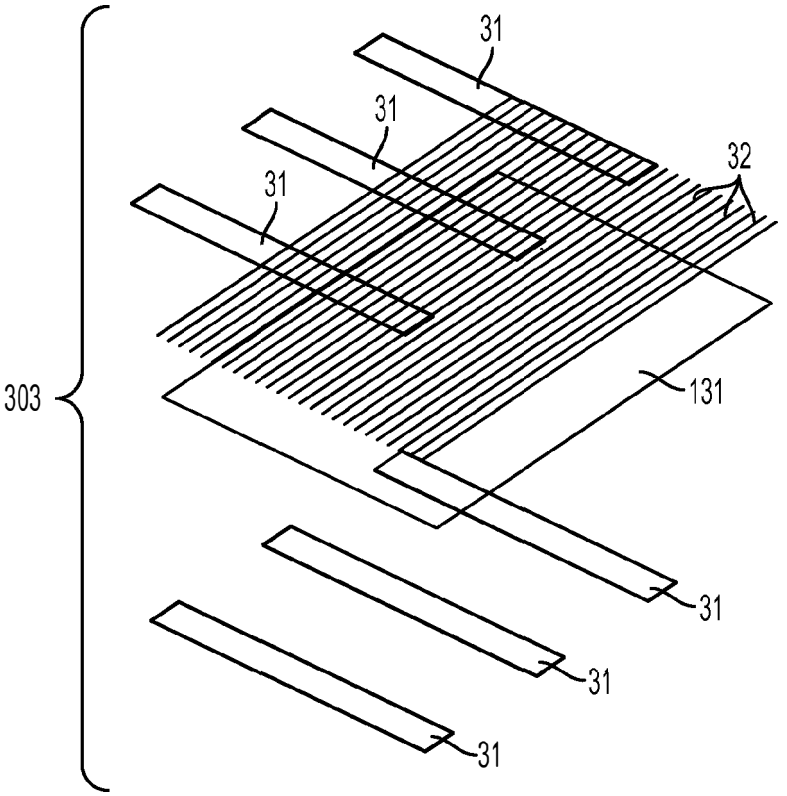

FIG. 17

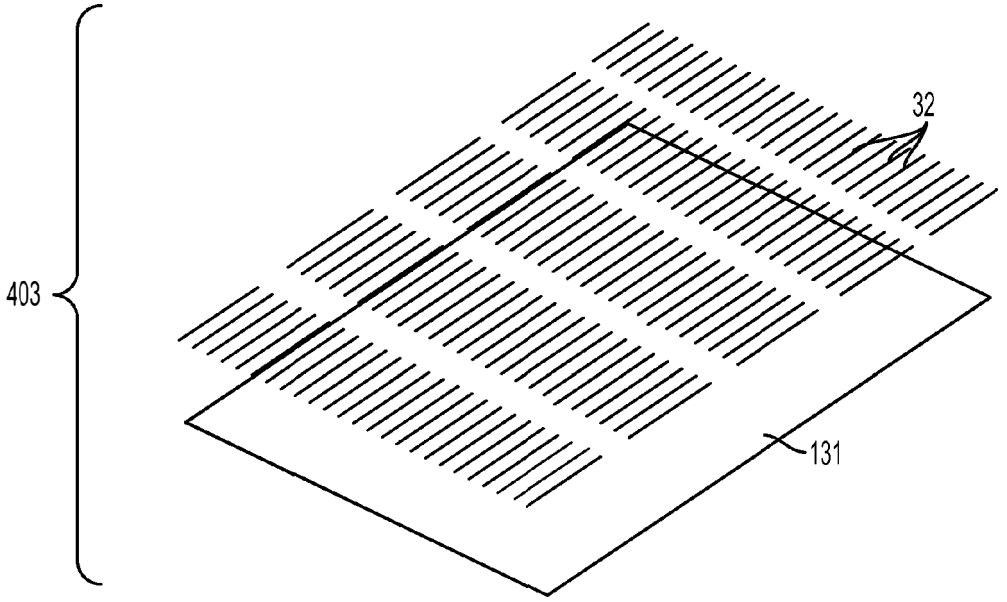

FIG. 18

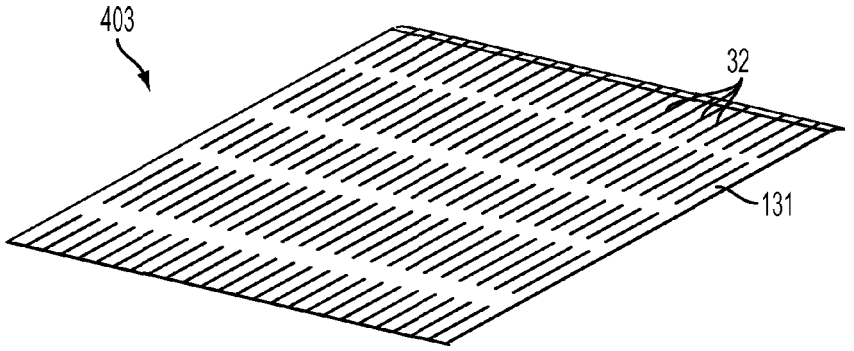

FIG. 19

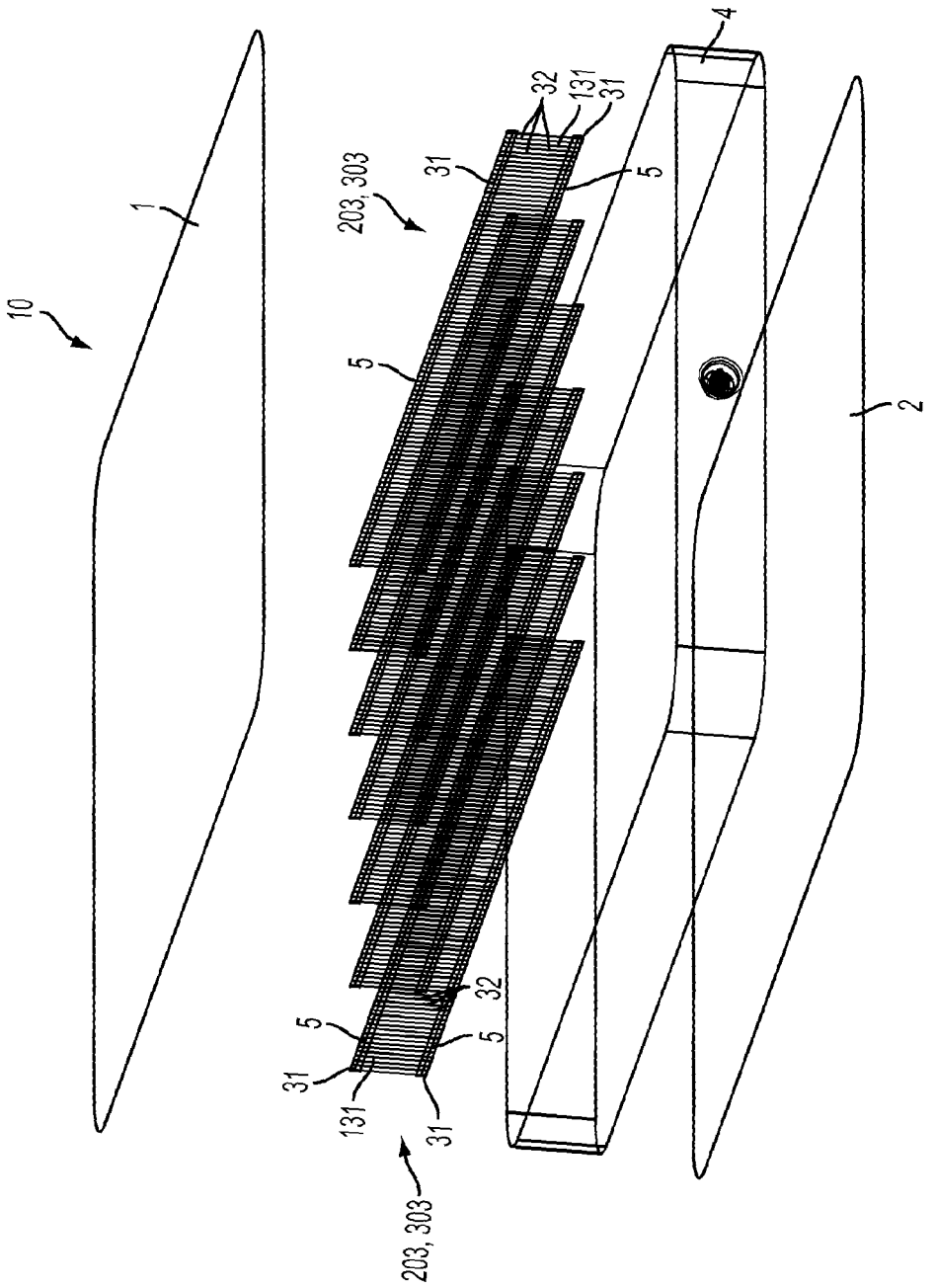

FIG. 20

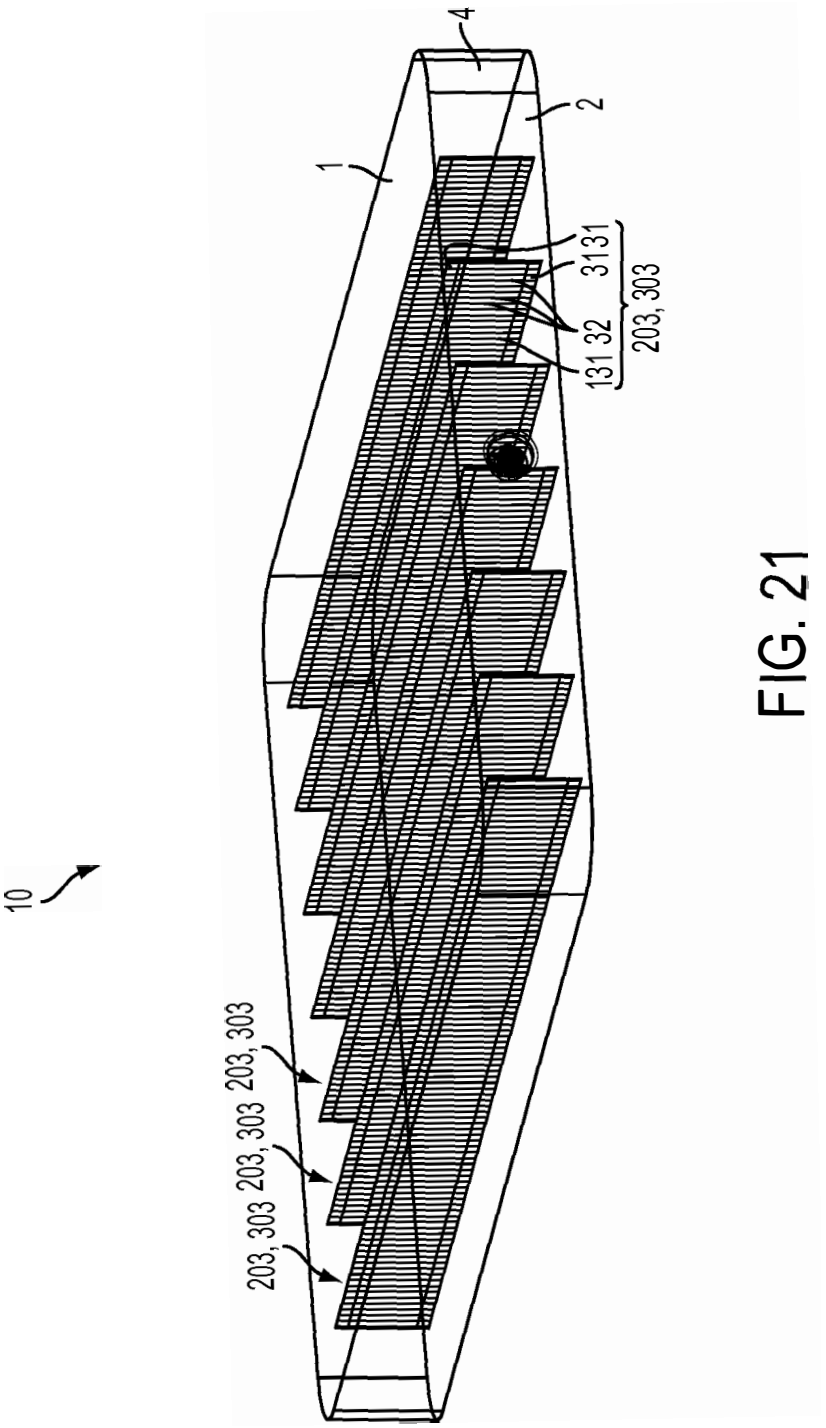

FIG. 21

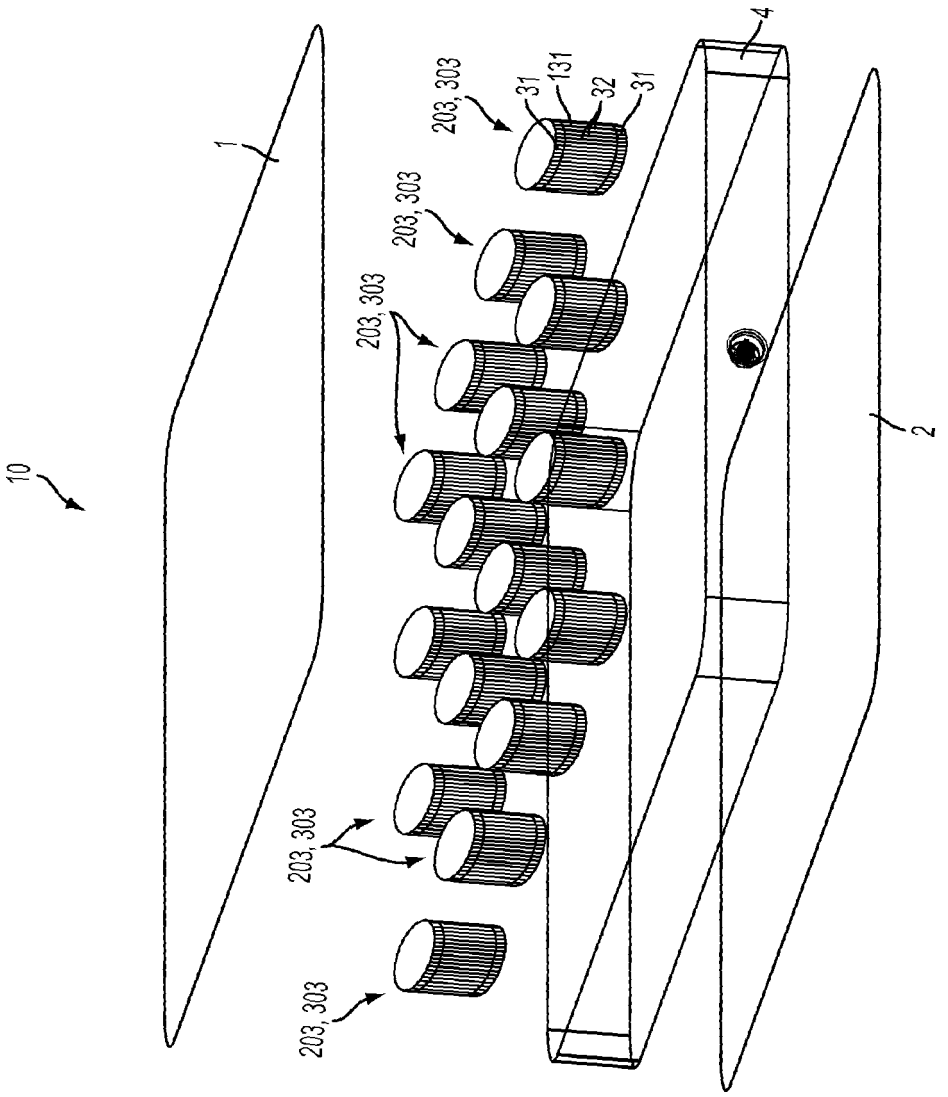

FIG. 22

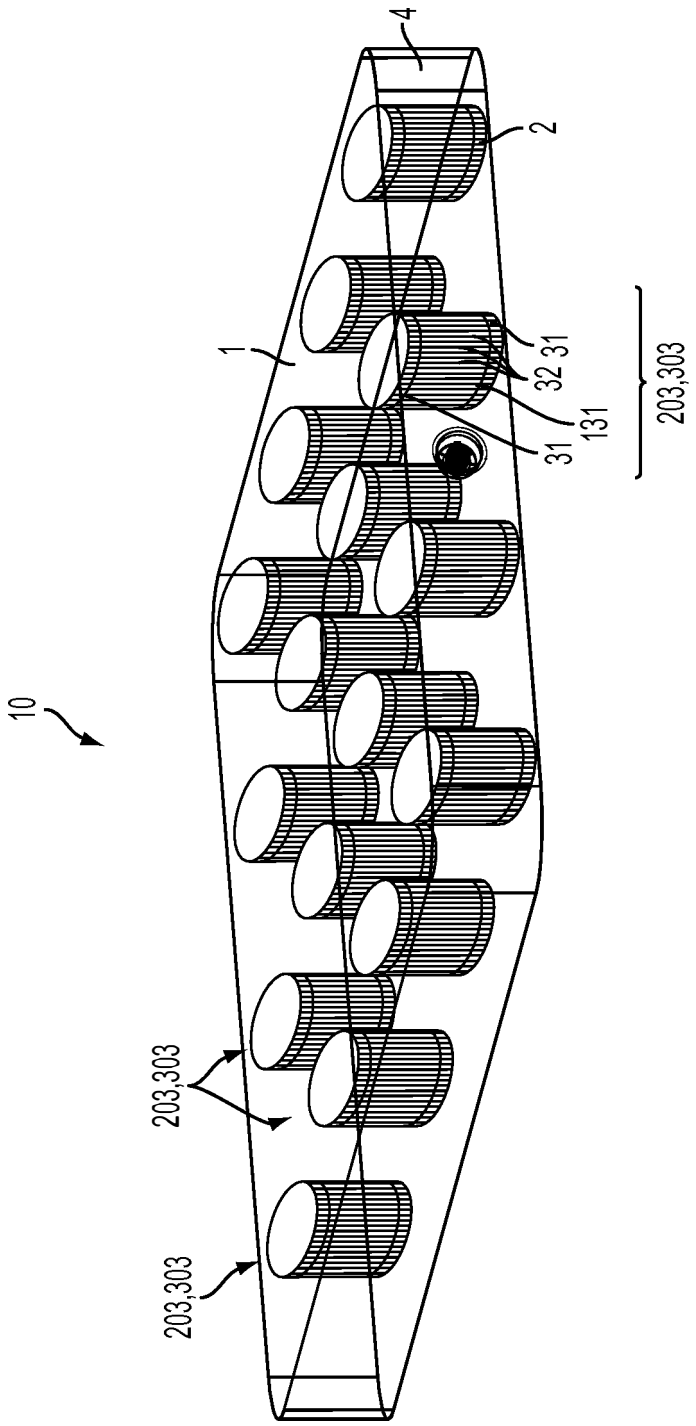

FIG. 23

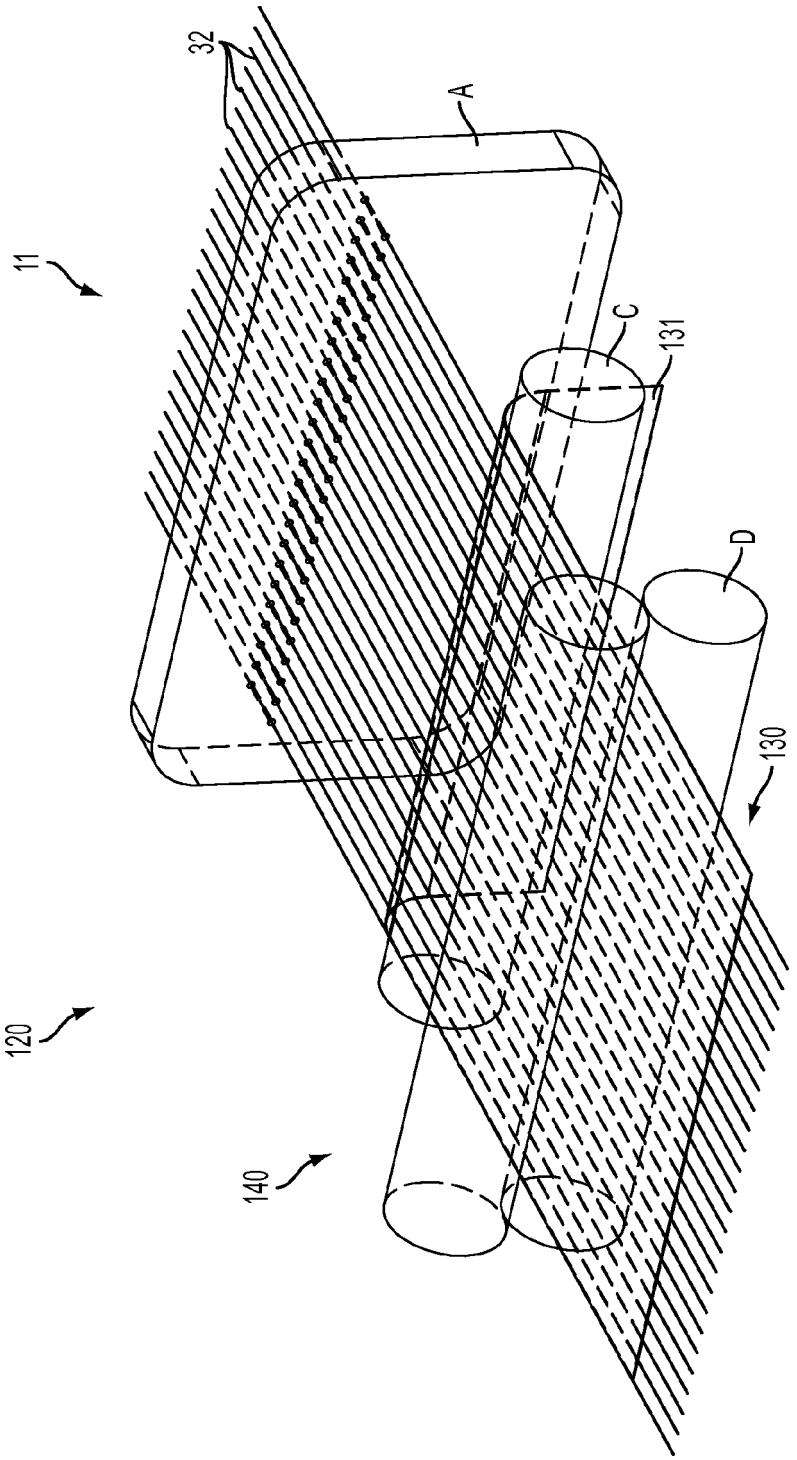

FIG. 24

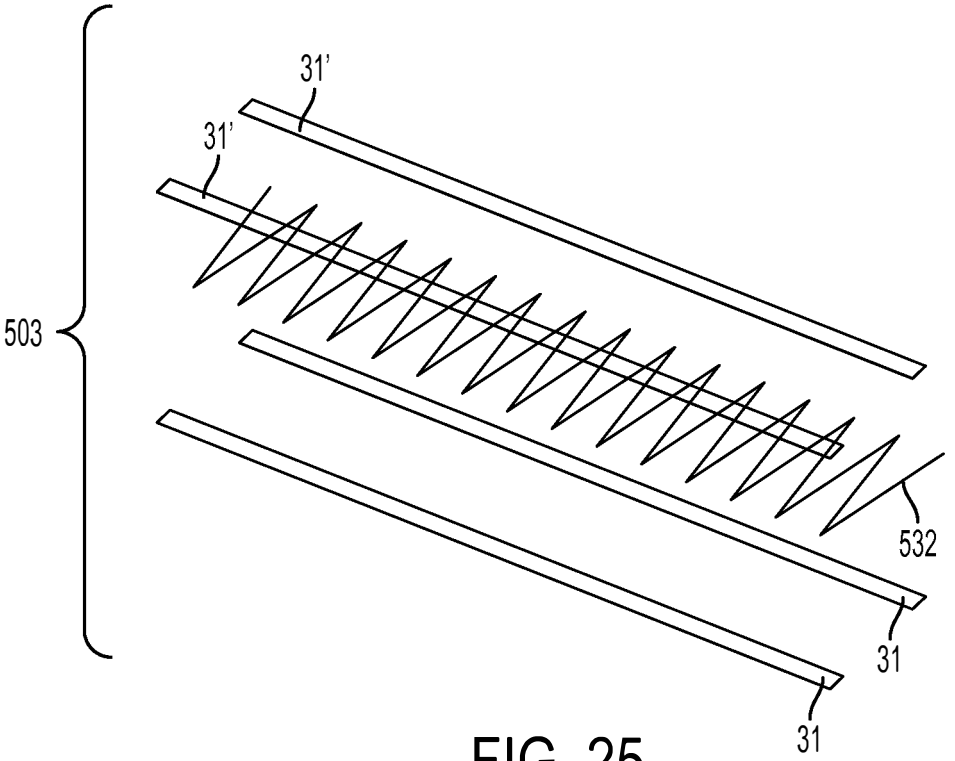

FIG. 25

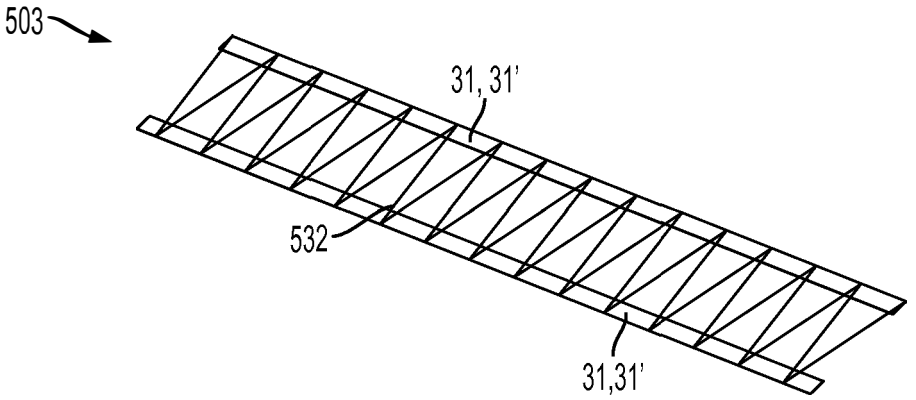

FIG. 26

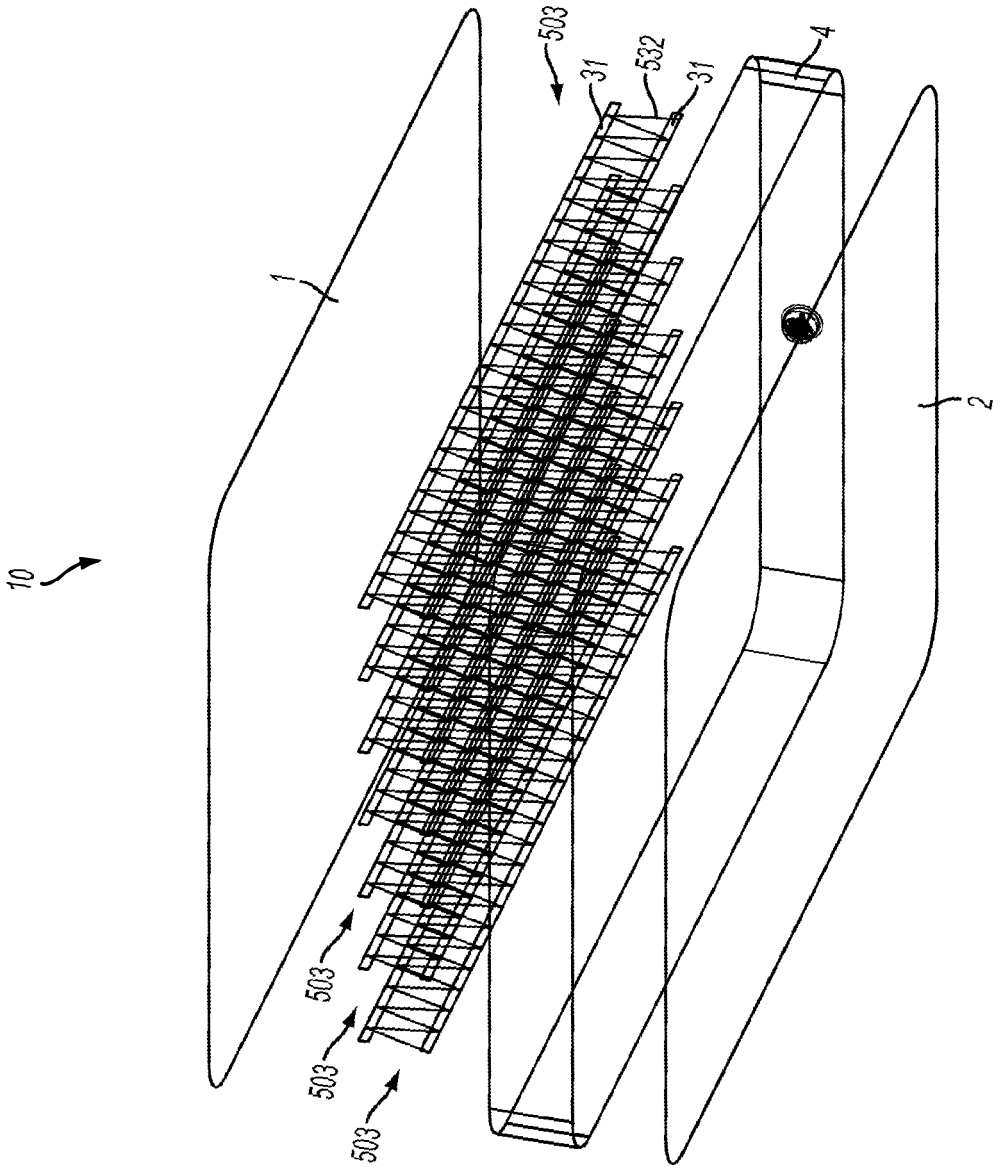

FIG. 27

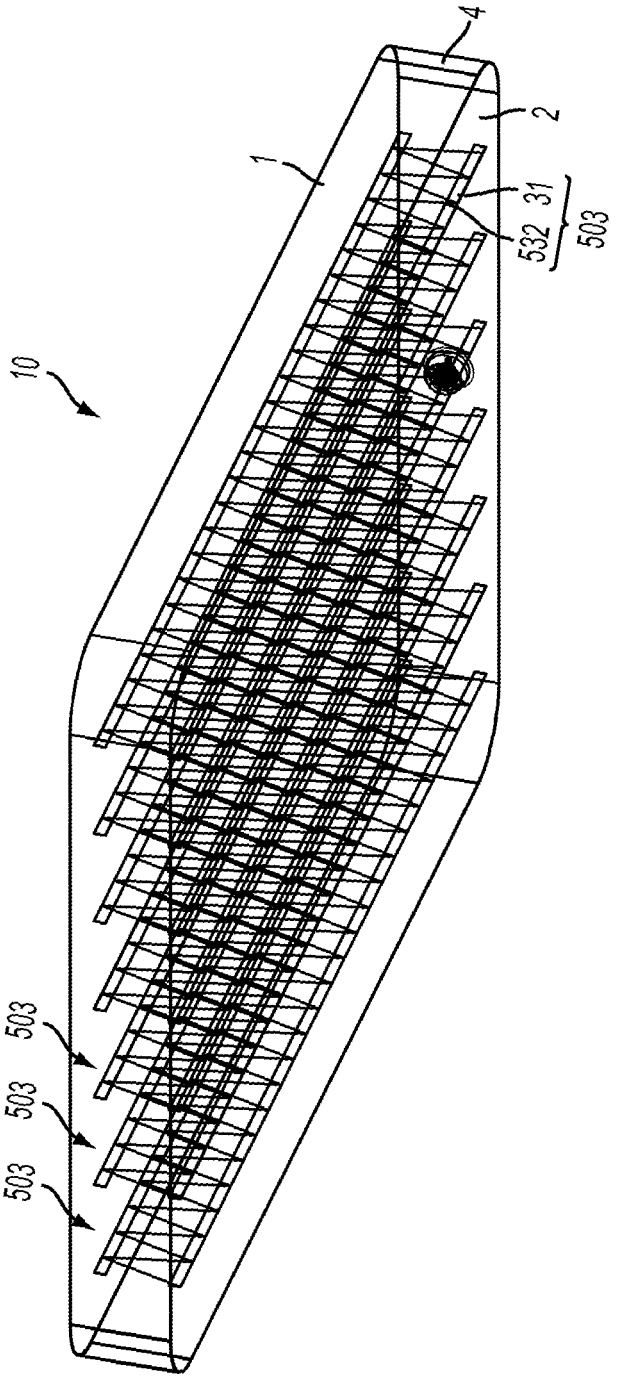

FIG. 28

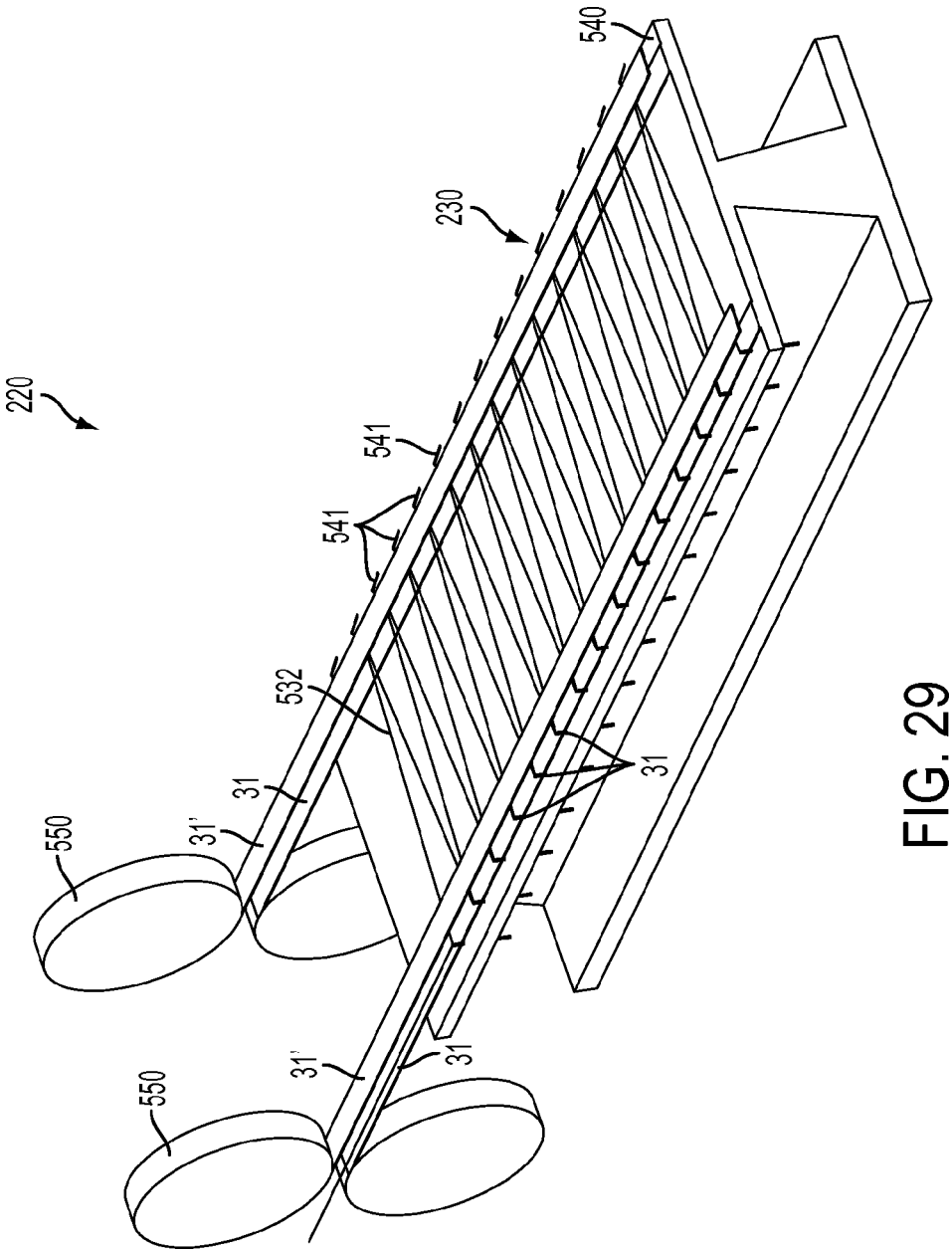

FIG. 29

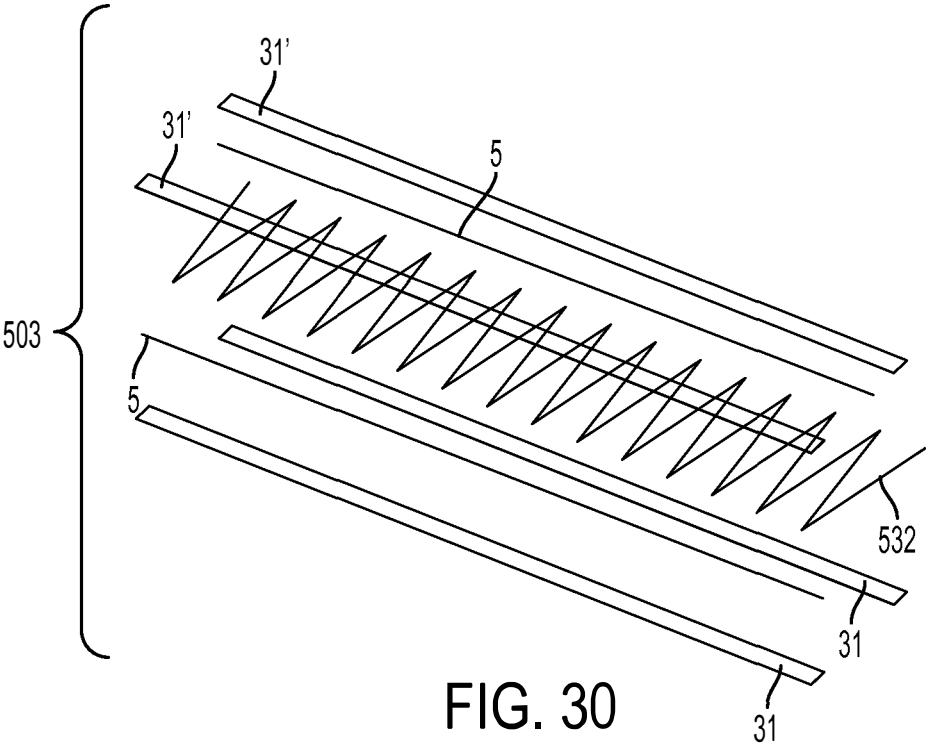

FIG. 30

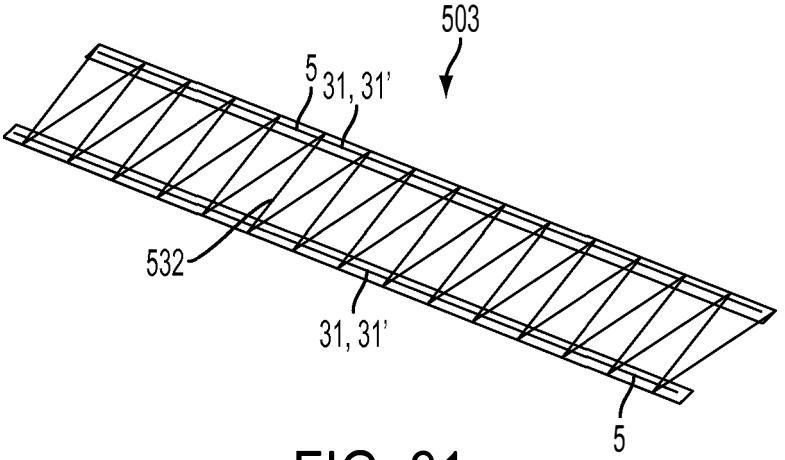

FIG. 31

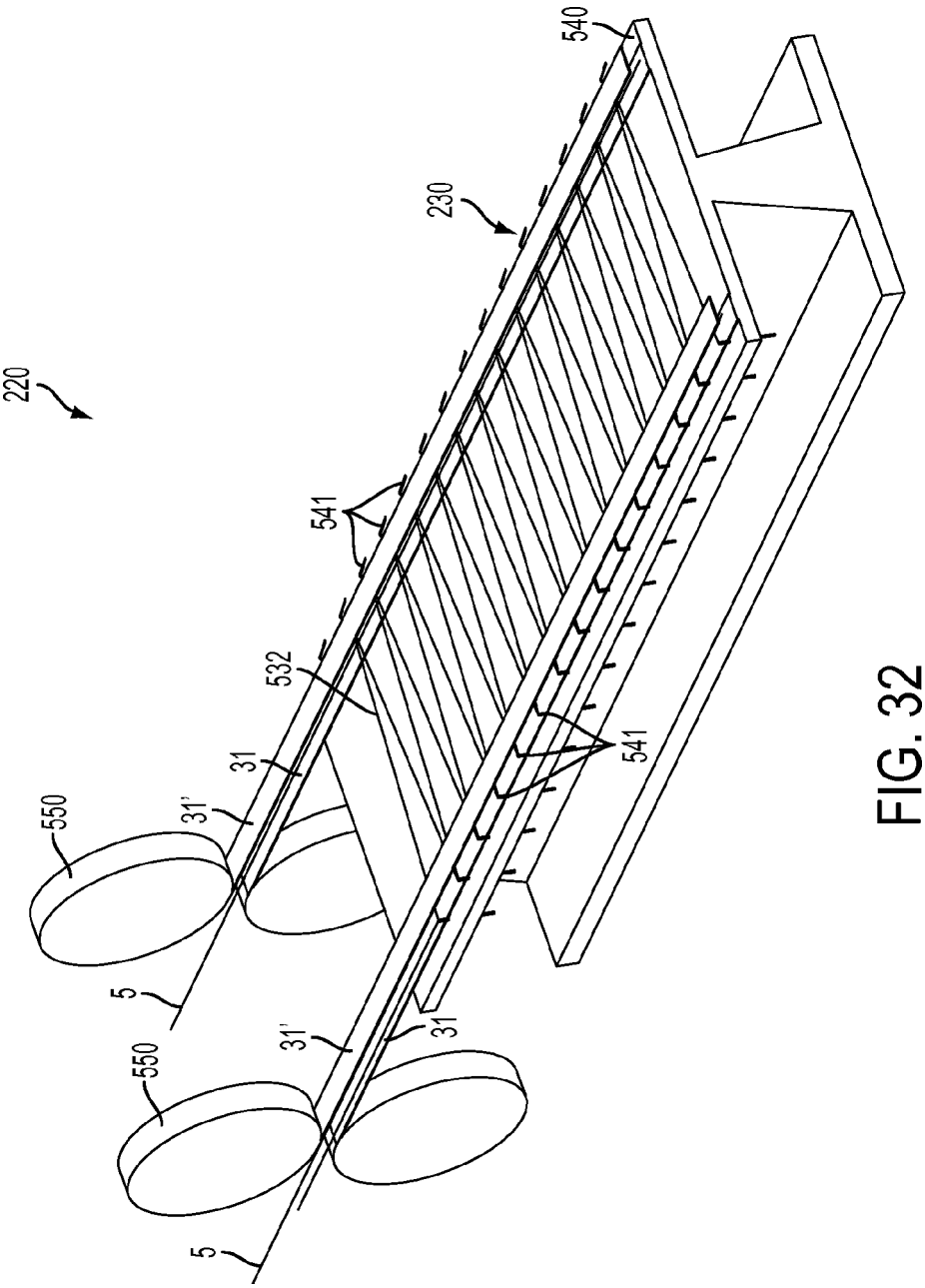

FIG. 32

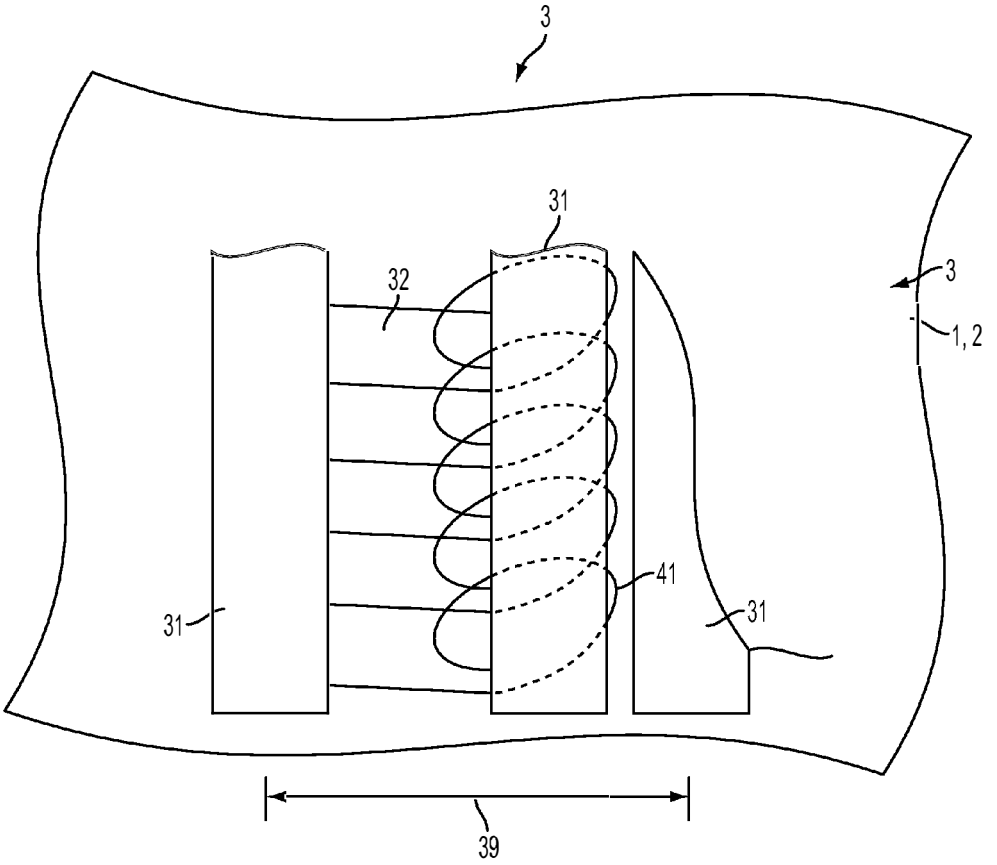

FIG. 33

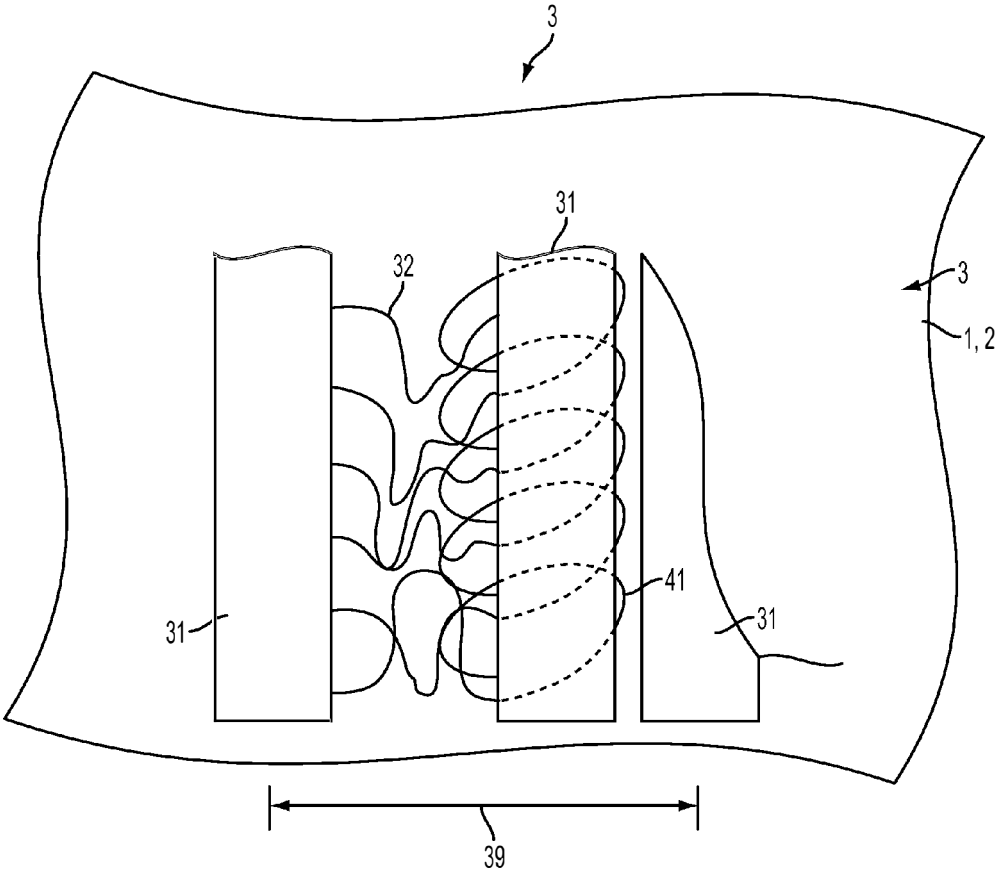

FIG. 34

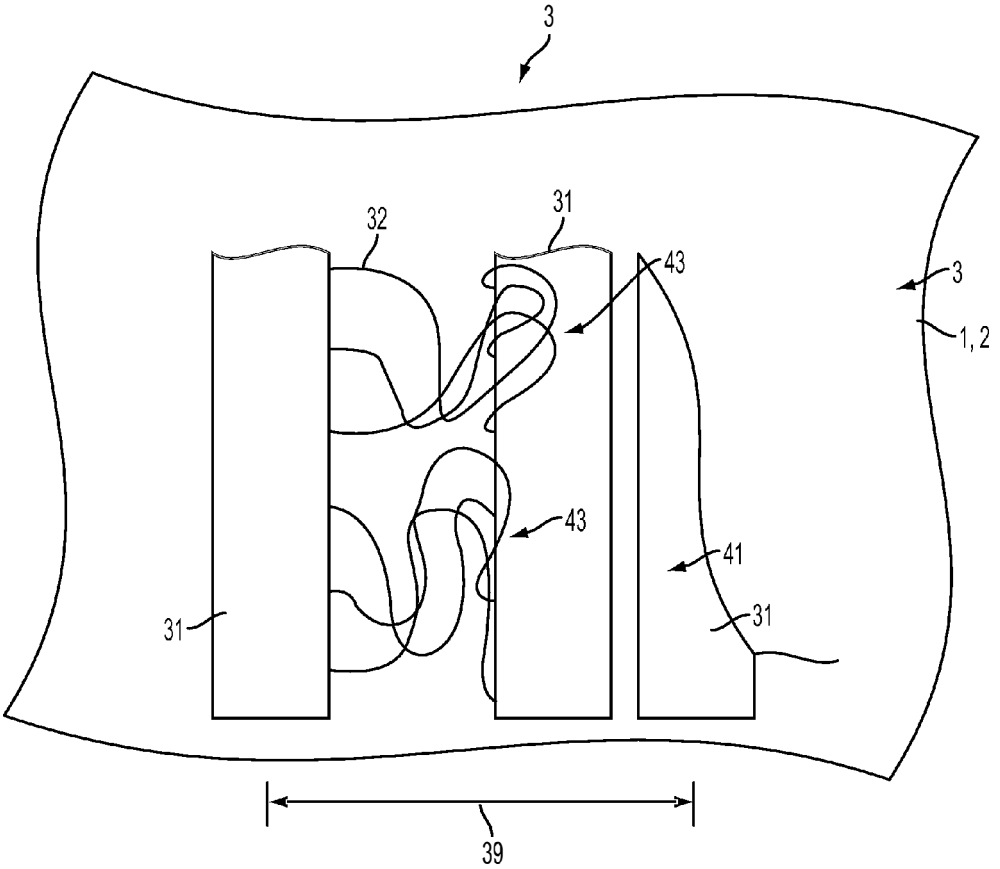

FIG. 35

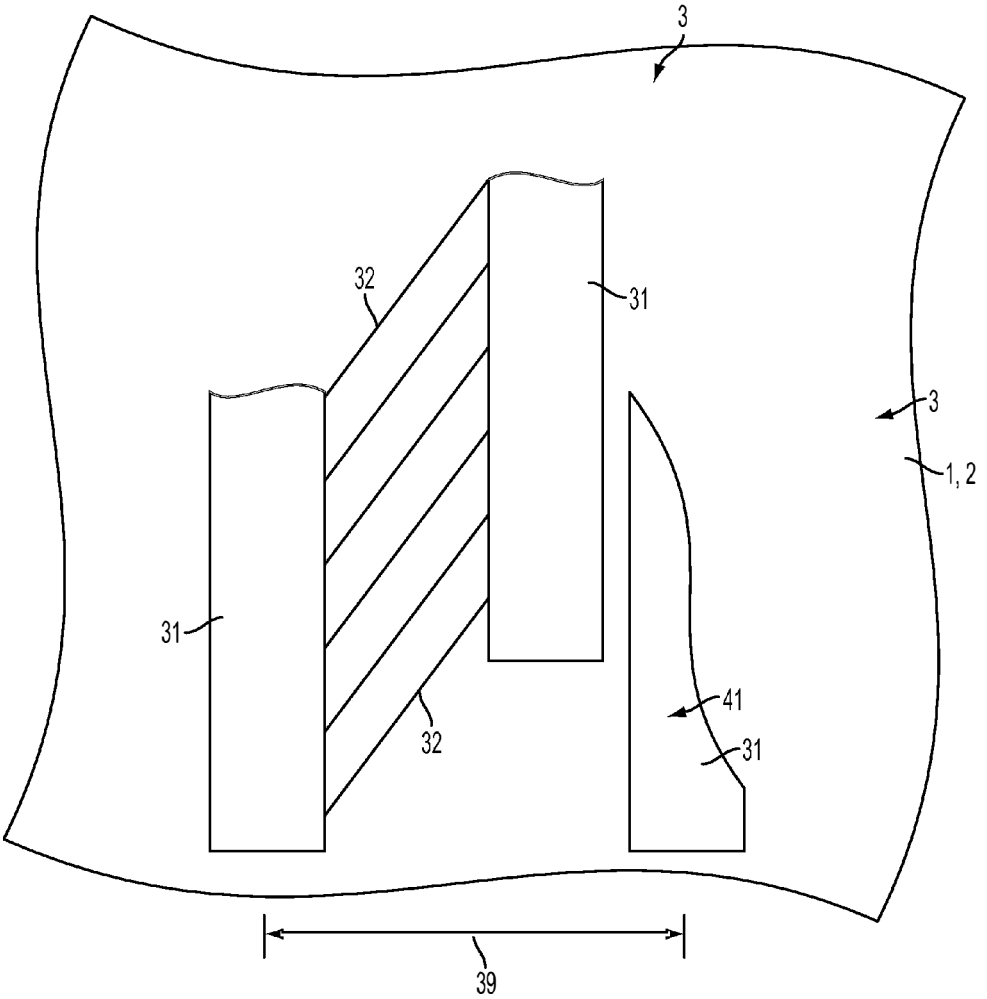

FIG. 36

METHOD OF PRODUCING AN INTERNAL TENSIONING STRUCTURE USEABLE WITH INFLATABLE DEVICES

RELATED APPLICATIONS

This application is a continuation of PCT Application Serial No. PCT/US2012/042079, filed Jun. 12, 2012, which claims priority to Chinese Patent Application Serial No. 201210053143.X, filed Mar. 2, 2012, Chinese Patent Application Serial No. 201210053146.3, filed Mar. 2, 2012, Chinese Patent Application Serial No. 201220075738.0, filed Mar. 2, 2012, and Chinese Patent Application Serial No. 201220075742.7, filed Mar. 2, 2012 and the disclosures of which are expressly incorporated by reference herein.

BACKGROUND

1. Technical Field

The present disclosure relates to an inflatable product structure, and in particular to an inflatable product structure which is light in weight and low in cost.

2. Description of the Related Art

Inflatable products, are light in weight, easy to house, and easy to carry. Such products technologies have been used for outdoor items and toys, as well as various household goods including inflatable beds, inflatable sofas and the like.

Many inflatable products utilize internal structures in order to form the product into its intended, predetermined shape upon inflation. For example, one type of inflatable bed, referred to as a wave-shaped, straight-strip or I-shaped inflatable bed, may include a tension-band type internal structure arranged along wave-shaped, straight-line or I-shaped pathways within the internal cavity. Another type of inflatable bed, referred to as a column-type inflatable bed, has tension bands arranged into honeycomb-shaped or cylindrical structures within the inflatable cavity.

These internal tension-band structures disposed in the cavity of the inflatable bed give shape to the bed as internal pressure increases, thereby preventing the inflatable bed from expanding evenly on all sides in the manner of a balloon. More particularly, in order to maintain an inflatable bed as a rectangular shape, the tension bands join the upper and lower surfaces of the inflatable bed to one another. To allow passage of pressurized air to both sides of these joining structures, the tension bands may be formed as belts stretching between the upper and lower surfaces, or as vertical expanses of material with air columns formed therein. The number and spacing of the tension bands is proportional to the sharpness of the rectangularity of the inflated product. That is to say, a greater number and/or linear extent of tension bands within the pressurized cavity results in a more "flat" bed surface.

In conventional inflatable products such as the inflatable beds described above, the tension bands are made of PVC sheets with a sufficient thickness to ensure spreading of force and concomitant reductions in stress in the product material. For example, the tension bands of known inflatable beds or sofas may have a thickness of about 0.36 mm. For some known water carrier devices, such as inflatable swimming pools, the internal tension bands may have a thickness of about 0.38 mm, while "sandwich" type inflatable swimming pools may have a thickness of 0.7-0.8 mm.

Thus, conventional inflatable structures utilizing belt- or sheet-like PVC tension bands meet the force requirements of the product by varying the thickness of the tension bands. However, where continuous plastic strips or belts are utilized, such tension bands contribute to increased weight of the inflatable product. Similarly, an increase in thickness and/or spatial density of solid-strip tension bands also increases the compressed/folded volume of the deflated inflatable structure.

SUMMARY

The present disclosure provides an internal tensioning structure for use in an inflatable product, and a method for producing the same. The tensioning structure fulfills the basic function of maintaining two adjacent inflatable surfaces in a desired geometric arrangement when the inflatable product is pressurized. The tensioning structure is formed by connecting a pair of plastic strips sheets via spaced-apart strands, such as strings or wires. When pulled taut, the strands provide a high tensile strength between the two opposed plastic strips. At the same time, the plastic strips facilitate a strong, long-lasting weld between the tensioning structure and the inflatable product.

Various configurations of the tensioning structure are contemplated within the scope of the present disclosure. In one embodiment, a pair of parallel plastic strips has a plurality of strands extending therebetween to connect the plastic strips to one another, with the strands substantially parallel to one another and substantially perpendicular to the plastic strips. In another embodiment, a similar arrangement of two parallel plastic strips are connected by a plurality of strands with each adjacent pair of such strands converging to a point at one of the plastic strips in a "V" configuration. Either embodiment may be incorporated into a tensioning structure with one of a number of geometric arrangements within the inflatable cavity, such as linear, cylindrical, wave-shaped, etc.

According to one embodiment thereof, the present disclosure provides an inflatable product comprising: a first sheet and a second sheet disposed opposite the first sheet, the first and second sheets spaced apart to define a gap when the inflatable product is inflated. The inflatable product further includes a tensioning structure having a gap portion spanning the gap between the first sheet and the second sheet to maintain a spatial relationship between the first and second sheets when the inflatable product is inflated. The gap portion has an extent measured along the surface of at least one of the first sheet and the second sheet. The gap portion occupies a volume and has an operable area occupied by gap portion of the tensioning structure defined as the total area of the gap between the first sheet and the second sheet, as measured along the extent of the gap portion of the tensioning structure. The gap portion of the tensioning structure defines an operable area-to-volume ratio of at least 10 square millimeters per cubic millimeter.

According to another embodiment thereof, the present disclosure provides an inflatable product comprising: a first sheet and a second sheet disposed opposite the first sheet. The first and second sheets are spaced apart to define a gap when the inflatable product is inflated. The inflatable product further includes a tensioning structure having a gap portion spanning the gap between the first sheet and the second sheet to maintain a spatial relationship between the first and second sheets when the inflatable product is inflated. The gap portion has an extent measured along the surface of at least one of the first sheet and the second sheet. The gap portion has an operable area occupied by gap portion of the tensioning structure defined as the total area of the gap between the first sheet and the second sheet, as measured along the extent of the gap portion of the tensioning structure. The gap portion of the tensioning structure has a total weight such that the tension-

ing structure defines an operable area-to-weight ratio of at least 6,000 square centimeters per kilogram.

According to another embodiment thereof, the present disclosure provides an inflatable product comprising: a first sheet and a second sheet disposed opposite the first sheet. The first and second sheets are spaced apart to define a gap when the inflatable product is inflated; The inflatable product further comprises a tensioning structure having a gap portion spanning the gap between the first sheet and the second sheet to maintain a spatial relationship between the first and second sheets when the inflatable product is inflated. The gap portion of the tensioning structure has an average thickness of less than 0.125 millimeters.

According to yet another embodiment thereof, the present disclosure provides an inflatable product comprising: a first sheet; a second sheet disposed opposite the first sheet, the first and second sheets spaced apart to define a gap; a tensioning structure spanning the gap between the first sheet and the second sheet, the tensioning structure comprising: a plurality of strands uniformly spaced apart and arranged substantially parallel to one another; and a plurality of weld strips spaced apart from one another and substantially perpendicular to the plurality of strands, each of the plurality of weld strips affixed to each of the plurality of strands, and each of the plurality of weld strips affixed to at least one of the first sheet and the second sheet.

According to still another embodiment thereof, the present disclosure provides an inflatable product comprising: a first sheet; a second sheet disposed opposite the first sheet, the first and second sheets spaced apart to define a gap; a tensioning structure spanning the gap between the first sheet and the second sheet, the tensioning structure comprising: a plurality of strands uniformly spaced apart and arranged in parallel; and a first weld sheet having the plurality of strands affixed to an upper surface of the first weld sheet.

According to still another embodiment thereof, the present disclosure provides an inflatable product comprising: a first sheet; a second sheet disposed opposite the first sheet, the first and second sheets spaced apart to define a gap; a tensioning structure spanning the gap between the first sheet and the second sheet, the tensioning structure comprising: an upper weld strip; a lower weld strip arranged substantially parallel to the upper weld strip and spaced apart from the upper weld strip span the gap between the first sheet and the second sheet; and a plurality of end-to-end V-shaped strands arranged between weld strips, each of the V-shaped strands having upper and lower ends fixed to the upper and lower weld strips, respectively.

According to still another embodiment thereof, the present disclosure provides an inflatable product comprising: a first sheet; a second sheet disposed opposite the first sheet, the first and second sheets spaced apart to define a gap, the first sheet and the second sheet cooperating to at least partially bound an inflatable chamber; a plurality of tensioning structures welded to respective inner surfaces of the first and second sheets such that the plurality of tensioning structure span the gap, each of the plurality of tensioning structures comprising: an upper weld strip affixed to one of the first sheet and the second sheet; a lower weld strip affixed to the other of the first sheet and the second sheet; and a plurality of strands connecting the upper and lower weld strips to one another.

According to still another embodiment thereof, the present invention provides an inflatable product comprising: a first sheet; a second sheet disposed opposite the first sheet, the first and second sheets spaced apart to define a gap, the first sheet and the second sheet cooperating to at least partially bound an inflatable chamber; a plurality of tensioning structures welded to inner surfaces of the first and second sheets such that the plurality of tensioning structures span the gap, each of the plurality of tensioning structures comprising: a weld sheet; a plurality of strands, and the plurality of strands substantially evenly spaced and arranged substantially parallel to one another, the plurality of strands affixed to the weld sheet; and a weld strip affixed to each end of the weld sheet such that a longitudinal extent of the weld strip is substantially perpendicular to the plurality of strands, respective ends of the plurality of strands are affixed to the weld strip, and each of the weld strips are welded to one of the first sheet and the second sheet.

According to still another embodiment thereof, the present invention provides a method for producing a tensioning structure of an inflatable product, the method comprising: arranging at least one of a welder and an adhesive device downstream of a strand guide; supplying a plurality of strands to the welder or the adhesive device via the strand guide, such that the supplied strands are substantially uniformly spaced apart and arranged substantially parallel to one another; positioning weld strips on a first die of the welder or gluing device, the weld strips having a longitudinal extent corresponding to an overall width of the plurality of strands; advancing a second die of the welder or gluing device into an operable position in which the first and second dies are disposed at opposing sides of the weld strips, activating the welder or gluing device to fixedly connect the weld strips to the plurality of strands, such that the weld strips are affixed to the plurality of strands in a spaced apart and substantially parallel arrangement, and such that the weld strips are substantially perpendicular to the plurality of strands.

According to still another embodiment thereof, the present invention provides a method for producing a tensioning structure of an inflatable product comprises: arranging a hot roller downstream of a strand guide; supplying a plurality of strands to the hot roller via the strand guide, such that the supplied strands are substantially uniformly spaced apart and arranged substantially parallel to one another; arranging a conveying roller downstream of the strand guide, the conveying roller operable to deliver at least one weld sheet to the hot roller, the at least one weld sheet having a width corresponding to an overall width of the plurality of strands; and passing the plurality of strands and the at least one weld sheet through the hot roller, such that the plurality of strands become affixed to the at least one weld sheet.

According to still another embodiment thereof, the present invention provides a method for producing a tensioning structure, the method comprising: arranging a first pair of weld strips parallel to one another on a joining device; wrapping at least one continuous strand around a plurality of members arranged along a pair of rows adjacent the first pair of weld strips, respectively, each of the pair of rows of members offset with respect to the other of the pair of rows of members, the step of wrapping comprising alternating between the pair of rows, such that the at least one continuous strand forms a plurality of end-to-end V-shaped strands; and using the joining device to join the first pair of weld strips to the plurality of strands at respective V-shaped corners formed by the at least one continuous strand, such that the tensioning structure has a tensile strength along a direction perpendicular to a longitudinal extent of the first pair of weld strips.

BRIEF DESCRIPTION OF THE DRAWINGS

The above mentioned and other features and advantages of this disclosure, and the manner of attaining them, will become more apparent and the invention itself will be better

understood by reference to the following description of embodiments of the invention taken in conjunction with the accompanying drawings, wherein:

FIG. **1** is an exploded, perspective view of an inflatable structure incorporating a tensioning structure made in accordance with the present disclosure;

FIG. **2** is an enlarged perspective view of the tensioning structure shown in FIG. **1**;

FIG. **3** is an exploded, perspective view of an inflatable bed incorporating tensioning structures made in accordance with the present disclosure;

FIG. **4** is an assembled view of the inflatable bed of FIG. **3**, in which the inflatable bed material is made transparent to show the internal arrangement of the tensioning structures;

FIG. **5** is an exploded, perspective view of an inflatable bed incorporating an alternative geometric arrangement of tensioning structures made in accordance with the present disclosure;

FIG. **6** is an assembled view of the inflatable bed of FIG. **5**, in which the inflatable bed material is made transparent to show the internal spatial arrangement of the tensioning structures;

FIG. **7** is a perspective view of an apparatus for producing bulk material for the tensioning structures shown in FIGS. **3-6**;

FIG. **8** is an exploded, perspective view showing a first embodiment of the bulk material created by the apparatus of FIG. **7**;

FIG. **9** is a perspective view showing a first embodiment of the bulk material created by the apparatus of FIG. **7**;

FIG. **10** is a perspective view showing a second embodiment of the bulk material created by the apparatus of FIG. **7**;

FIG. **11** is a perspective view showing a second embodiment of the bulk material created by the apparatus of FIG. **7**;

FIG. **12** is an exploded, perspective view of a first alternative tensioning structure made in accordance with the present disclosure;

FIG. **13** is an assembled, perspective view of the first alternative tensioning structure shown in FIG. **12**;

FIG. **14** is an exploded, perspective view of a second alternative tensioning structure made in accordance with the present disclosure;

FIG. **15** is an exploded, perspective view of a third alternative tensioning structure made in accordance with the present disclosure;

FIG. **16** is an assembled, perspective view of the third alternative tensioning structure shown in FIG. **15**;

FIG. **17** is an exploded, perspective view of a fourth alternative tensioning structure made in accordance with the present disclosure;

FIG. **18** is an exploded, perspective view of a fifth alternative tensioning structure made in accordance with the present disclosure;

FIG. **19** is an assembled, perspective view of the fifth alternative tensioning structure shown in FIG. **18**;

FIG. **20** is an exploded, perspective view of an inflatable bed incorporating alternative tensioning structures made in accordance with the present disclosure;

FIG. **21** is an assembled view of the inflatable bed of FIG. **22**, in which the inflatable bed material is made transparent to show the internal arrangement of the tensioning structures;

FIG. **22** is an exploded, perspective view of an inflatable bed incorporating an alternative tensioning structures made in accordance with the present disclosure, configured in an alternative geometric arrangement;

FIG. **23** is an assembled view of the inflatable bed of FIG. **22**, in which the inflatable bed material is made transparent to show the internal spatial arrangement of the tensioning structures;

FIG. **24** is a perspective view of an apparatus for producing bulk material for the first through fifth alternative tensioning structures shown in FIGS. **12-19**;

FIG. **25** is an exploded, perspective view of a sixth alternative tensioning structure made in accordance with the present disclosure;

FIG. **26** is an assembled, perspective view of the sixth alternative tensioning structure shown in FIG. **25**;

FIG. **27** is an exploded, perspective view of an inflatable bed incorporating the sixth alternative tensioning structure shown in FIG. **25**;

FIG. **28** is an assembled view of the inflatable bed of FIG. **27**, in which the inflatable bed material is made transparent to show the internal arrangement of the tensioning structures;

FIG. **29** is a perspective view of an apparatus for producing bulk material for the sixth alternative tensioning structures shown in FIGS. **25-28**;

FIG. **30** is an exploded, perspective view of a seventh alternative tensioning structure made in accordance with the present disclosure;

FIG. **31** is an assembled, perspective view of the seventh alternative tensioning structure shown in FIG. **30**;

FIG. **32** is a perspective view of an apparatus for producing bulk material for the seventh alternative tensioning structures shown in FIGS. **30** and **31**;

FIG. **33** is a top plan view of portions of tensioning structures bunched together during a welding process;

FIG. **34** is a top plan view of portions of a tensioning structure collapsed when the mattress is deflated for storage or shipment;

FIG. **35** is a view similar to FIG. **33** showing portions of tensioning structures with strands placed in piles during a welding process; and

FIG. **36** is a view similar to FIG. **33** showing portions of tensioning structures shifted relative to each other during a welding process.

Corresponding reference characters indicate corresponding parts throughout the several views. The exemplifications set out herein illustrate exemplary embodiments of the present invention, and such exemplifications are not to be construed as limiting the scope of the invention in any manner.

DETAILED DESCRIPTION

The present disclosure provides tensioning structures which give shape to inflatable devices, such as inflatable couches, beds or swimming pools. The tensioning structures are lightweight and occupy minimal volume when the device is deflated and packed away, while also functioning as a strong and durable internal support upon inflation and use of the inflatable device.

An exemplary tensioning structure in accordance with the present disclosure utilizes thin and flexible string- or wire-like strands which join two areas of fabric to one another. The strands are firmly connected to the adjacent fabric via an intermediate material, such as a strip or sheet, and the intermediate material is in turn firmly connected to the fabric. The area of contact between intermediate material and the attached strands may be manipulated to impart a connection strength commensurate with the tensile strength of the strand. Similarly, the area of contact between the intermediate material and the adjacent fabric may also be manipulated to impart

a fabric/tensioning structure connection strength commensurate with the aggregate tensile strength of all strands in the tensioning structure.

Various tensioning structures and methods of manufacturing the same are described in detail below. It is contemplated that any of the present described tensioning structures may be used in any inflatable product, either alone, as a group or in combination with one another as required or desired for a particular design. In addition, it is contemplated that tensioning structures in accordance with the present disclosure can be used in other contexts, such as in camping equipment, or in any other context where a lightweight, packable structure is needed to join two pieces of material that are urged away from one another in use.

1. Weld Strips Joined by Spaced-Apart Strands.

Turning now to FIGS. **1** and **2**, tensioning structure **3** is shown joining upper material **1** to lower material **2**. In the illustrated embodiment, tensioning structure **3** includes upper and lower weld strips **31** connected to one another by a plurality of substantially parallel strands **32** that define a gap portion extending between a gap between upper and lower sheets **1**, **2**. The upper and lower weld strips **31** are in turn welded to the upper material **1** and the lower material **2**, respectively, such that forces urging upper and lower materials **1**, **2** are encountered by tension in strands **32**.

Optionally, reinforcing strands **5** (FIG. **3**) may be provided along the longitudinal extent of weld strip **31** (i.e., substantially perpendicular to strands **32**). Reinforcing strands **5**, when provided, may be coupled to tensile strands **32**, such as by folding strands **32** over reinforcing strands **5**, tying strands **5**, **32** to one another, or adhesively securing strands **5**, **32** to one another. When so coupled, reinforcing strands **5** provide additional surface area contact with weld strips **31** and thereby improve the resistance of securing strands **5** to pulling free from weld strips **31**. In addition, the presence of reinforcing strands **32** within weld strips **31** improves the tensile strength of weld strips **31** along their longitudinal extents.

The plurality of strands **32** in the tensioning structure **3** as shown in FIGS. **1** and **2** are arranged such that the strands **32** are substantially parallel to one another when strands **32** are pulled taut (i.e., when weld strips **31** are drawn away from one another). In addition, adjacent pairs of strands **32** may have even intervals therebetween, such that a substantially constant tensile strength of tensioning structure **3** is maintained across the longitudinal extent of weld strips **31**. In an exemplary embodiment, strands **32** may extend along the entire width of weld strips **31**, as illustrated in FIGS. **1** and **2**, such that a large area of contact between strands **32** and weld strips **31** is achieved. For clarity, FIGS. **1** and **2** illustrate only a limited number of strands **32** affixed to strips **31** in this way, it being appreciated that all strands **32** in a tensioning structure **3** may be so affixed.

In one exemplary application shown in FIGS. **3** and **4**, a number of tensioning structures **3** are used in an inflatable structure such as air mattress **10**, which includes a sleeping surface at upper material **1** and a ground-contacting surface at lower material **2** Annular side band **4** is fixedly connected or welded to the peripheries of the upper material **1** and the lower material **2** to form an inflatable chamber. A valve **6** may be provided to facilitate inflation and deflation of the mattress **10**.

Although mattress **10** is shown as a single layer, double layers may also be provided. Additional mattress features may also be provided such as those shown in U.S. Pat. No. 7,591,036 titled Air-Inflated Mattress, the entire disclosure of which is expressly incorporated by reference herein. In addition to mattresses, tensioning structure may be used in other inflatable products such as inflatable boats, inflatable islands, floatation devices, swimming pools, inflatable slides, and any other inflatable devices.

Each of the plurality of tensioning structures **3** is welded to respectively opposed portions of the inner surfaces of upper and lower materials **1**, **2**, as described in detail above. As shown in FIGS. **3** and **4**, the tensioning structure **3** of the illustrated embodiment defines an overall longitudinal extent (that is, along the longitudinal direction of weld strips **31**) corresponding to the width or length of the sleeping and ground-contacting materials **1**, **2** of mattress **10**.

As noted above, tensioning structures **3** are connected to upper and lower material **1**, **2** by weld strips **31**. Such welding is accomplished by abutting one of weld strips **31** to one of upper and lower materials **1**, **2** and then applying heat to melt and fuse the material of weld strips **31** to the abutting material. In an exemplary embodiment, weld strips **31** and upper and lower material **1**, **2** are both made of PVC, and the welding process is accomplished by applying 105 degree Celsius heat for approximately 0.5 seconds. Upper and lower sheets **1**, **2** and weld strips **31** have thicknesses ranging from 0.15 to 1.0 millimeters with 0.34 millimeters being preferred for upper and lower sheets **1**, **2** and0.18 millimeters being preferred for weld strips **31**. Weld strips **31** are preferably 12.7 millimeters wide andmay range from 1 to 100 millimeters wide. The PVC used preferably has a tensile strength ranging from at least 7 kgf/cm to 73 kgf/cm and a density ranging from 0.8-2.5 grams per centimeter cubed with a preferred density of 1.5 grams per centimeter cubed.

In FIGS. **3** and **4**, tensioning structures **3** are welded to upper and lower material **1**, **2** along a substantially linear path, with the plurality of structures **3** substantially parallel to one another and equally spaced across materials **1**, **2**. However, it is contemplated that the welding geometry may take any other suitable geometry, such as a wave-like path, I-shaped path, Z-shaped path or V-shaped path. One exemplary alternative geometry is a cylindrical or columnar arrangement, as illustrated in FIGS. **5** and **6**. In this arrangement, upper and lower weld strips **31** are each connected at their ends in an end-to-end manner to form an arcuate ring, such as a circular ring as illustrated. The plurality of strands **32** between the upper and lower weld strips **31** thus form a closed columnar periphery, thereby forming the body of a column. Upon assembly of inflatable bed **10**, this column is welded to upper and lower materials **1**, **2** in a similar fashion as described herein with respect to linearly arranged tensioning structure **3**.

When mattress **10** is inflated, the introduction of pressurized air into the cavity of mattress urges upper and lower materials **1**, **2** apart from one another. When sufficiently pressurized, strands **32** become taut and tensioning structures **3** prevent any further spreading apart of upper and lower materials **1**, **2** in the vicinity of each tensioning structure **3**. Further pressurization causes further tensile stress within tensioning structures **3**, and additional forces on the weld between tensioning structures **3** and the adjacent material.

In an exemplary embodiment of mattress **10**, tensioning structure **3** includes as few as one strand every two centimeters, 1, 2, 3, 4, strands per centimeter of longitudinal extent of weld strips **31**, or as much as 5, 10, 15, 20, 30, 40, 50, or more strands per centimeter, or may have any number of strands per centimeter within any range defined by any of the foregoing values. According to the preferred embodiment, there is about 2.8 millimeters between strands (i.e., 3.6 strands per centimeter). Strands **32** may be made of regular cotton, polyester, nylon thread made of multiple filaments twisted together, of the type typically used in clothing seams, or any other strand types. These regular threads provide substantial tensile

strength at a very low cost. According to alternative embodiments, strands **32** may be woven together to form a fabric. According to another embodiment, non-woven fabric may be used to form the portion of tensioning structure **3** extending through the gap between sheets **1**, **2**.

According to the present disclosure, the threads may range from diameters of 0.1 to 1.0 millimeters. According to the preferred embodiment, the thread has a diameter of 0.2 millimeters. According to the present disclosure, the tensile strength of the threads may range from 0.2 kgf to 10 kgf per thread. According to the preferred embodiment, the tensile strength of the thread is 3 kgf per thread. According to the preferred embodiment, the threads have a density range from 0.01 to 0.3 grams per meter. According the preferred embodiment, the threads are 0.085 grams per meter. Of course, it is appreciated that other materials could be used, such as monofilament lines, metal wires or cables, plastic and the like.

The above-described exemplary arrangement of tensioning structure **3** yields a strong finished product suitable for use in a wide variety of inflatable products. In exemplary embodiments, tensioning structure **3** has strands **32** with an overall axial span between 5 centimeters and 65 centimeters, rendering strands **32** suitable to span a correspondingly sized gap formed between the spaced-apart weld strips **31**. Therefore, this exemplary embodiment is suitable for use in mattress **10** having an inflated thickness approximately equal to the axial span of strands **32**. This exemplary embodiment further uses the regular thread material noted above with a strand density in the ranges given above. The resulting exemplary tensioning structure **3** has an overall tensile strength between 5.9 and 23.3 kgf per linear centimeter (where linear centimeters are measured along the longitudinal extent of weld strips **31**).

When mattress **10** is inflated, tensioning structure defines an operable area along its longitudinal extent and across the gap between upper and lower materials **1**, **2**. More particularly, the area occupied by tensioning structure **3** is defined as the total area of the gap between the material sheets joined by tensioning structure **3**, with such gap measured along the longitudinal extent of the tensioning structure such that the measured area is inclusive of each of the plurality of strands **32**. Where tensioning structure **3** is linearly arranged and upper and lower materials **1**, **2** are parallel to one another (as shown, for example, in FIGS. **3** and **4**), this area is simply the longitudinal extent of tensioning structure **3** multiplied by the space between upper and lower materials **1** and **2**. Where tensioning structure **3** takes a non-linear path (such as the columnar, arcuate path shown in FIGS. **5** and **6**, for example), or upper and lower materials **1** and **2** are non-parallel, the above-described method for measuring area still results in an accurate operable area.

The above-described exemplary arrangement of tensioning structure **3** achieves high tensile strength while promoting light weight and low packed volume of the finished inflatable product. According to the present disclosure, strands **32** and the area between strands **32** define a gap portion **33** (see FIG. **1**) of tensioning structure **3** spanning the gap between upper and lower materials/sheets **1**, **2** that maintains a spatial relationship between the first and second sheets when mattress **10** is inflated. As shown in FIG. **1**, the collection of strands **32** that define this gap portion **33** having an extent **35** measured along the surface of at least one of first sheet **1** and second sheet **2**. Strands **32** of this gap portion **33** of tension structure **3** collectively occupy a volume. Gap portion **33** has an operable area defined by extent **35** of gap portion **33** (also closely approximate to a length of weld strips **31**) and length **37** of strands **32**. The operable area is occupied by strands **32** of tensioning structure **3** and defines a total area of the gap between first sheet **1** and second sheet **2**, as measured along extent **35** of gap portion **33** of tensioning structure **3**. For example, if strands **32** of an example tension structure have a length **37** of 100 millimeters between first and second sheets **1**, **2** and extent **35** of gap portion **33** is 100 millimeters, the operable area of gap portion **33** defined by strands **32** is 10,000 square millimeters. Assuming that there are 3.6 strands per centimeter, there will be 3,571 millimeters of strands **32** within the 10,000 square millimeter operable area. If strands **32** have a diameter of 0.2 millimeters, the total volume occupied by strands **32** will be 112.2 millimeters cubed. In this example, gap portion **33** of tensioning structure **3** defines an operable area-to-volume ratio of 89.13 millimeters squared per millimeters cubed (ex. 10,000 millimeter squared/112.2 millimeters cubed). According to the present disclosure, the operable area-to-volume ratio may range from 10 to 3,000 millimeters squared per millimeter cubed.

Because of use of strands **32** rather than PVC sheets, the overall weight of mattress **10** can also be reduced. Gap portion **33** of tensioning structure **3** defined by strands **32** has a total weight and operable area, as discussed above. In the above example, the operable area was 10,000 square millimeters (100 millimeters by 100 millimeters) and there were 3.6 strands per centimeter. This results in 3,571 millimeters of thread. At a density of 0.085 grams per meter of thread, the total thread will weigh 0.304 grams. As a result, an operable area-to-weight ratio will be about 32,941 square millimeters per gram (or 329,412 square centimeters per kilogram) in the preferred embodiment (ex. 10,000 square millimeters/0.304 grams). According to some embodiments of the present disclosure, the operable area-to-weight ratio is between 8,000 and 5,000,000 square centimeters per kilogram. According to other embodiments, the operable area-to-weight ratio is between 12,500 and 2,500,000 square centimeters per kilogram. According to other embodiments, the operable area-to-weight ratio is between 20,000 and 1,000,000 square centimeters per kilogram.

Because of use of strands **32** rather than PVC sheets, the average thickness of gap portion **33** of tensioning structure **3** extending between first and second sheets **1**, **2** can also be reduced. Gap portion **33** of tensioning structure **3** defined by strands **32** has an average thickness and operable area, as discussed above. The average thickness is reduced by the nominally circular cross section of strands **32** and the gaps between each strand **32**.

For example, the maximum thickness of gap portion **33** is the diameter of strands **32** (0.2 millimeters in the above example). The minimum thickness of gap portion **33** is zero in unoccupied areas between strands **32**. When averaged over the total area of gap portion **33** occupied by strands **32** and the total area of gap portion **33** without strands **33**, the average thickness is less than the diameter of strands **32**. Furthermore, if the distance between strands **32** is increased, the average thickness decreases because more of gap portion **33** is unoccupied by strands (i.e., the amount of gap portion **33** with zero thickness increases, which decreases the average thickness of gap portion **33**).

In the above example, the operable area was 10,000 square millimeters (100 millimeters by 100 millimeters) and there were 3.6 strands per centimeter (or 2.8 millimeter from strand **32** to strand **32**). In contrast to the maximum thickness of a circular thread, which is the diameter, the average thickness of a circular thread is pi*diameter/4. Using strands **32** with a diameter of 0.2 millimeters, results in average thickness of 0.157 millimeters for each strand **32**. Because of the gaps between strands **32**, the average thickness of gap portion **33**

defined by strands **32** and the gaps therebetween is 0.0112 millimeters (i.e. 2.8 millimeters between strands **32** has a thickness of zero, which reduces the average thickness of gap portion **33** to much less than the average thickness of strands **32**). According to some embodiments of the present disclosure, the average thickness of the gap portion of tensioning structure **3** is between 0.0003 to 0.1 millimeters. According to other embodiments, the average thickness is between 0.001 and 0.05 millimeters. According to other embodiments, the average thickness is between 0.005 and 0.02 millimeters.

Turning now to FIG. **7**, an apparatus **20** suitable for manufacturing tensioning structure **3** is shown. To operate apparatus **20** to this end, a plurality of strands **32** are provided from a bulk thread supply **11**, which may be a yarn stand containing several spools of yarn for example. Thread supply **11** continuously delivers the plurality of strands **32** via strand guide A, which includes a plurality of apertures through which individual strands **32** pass after delivery from thread supply **11** and before incorporation into bulk tensioning structure material **30** (shown in FIG. **9** and described below). Strand guide A maintains uniform spacing of strands **32** from one another, and arranges strands **32** parallel to one another such that the plurality of strands **32** are substantially planar. The width of weld strips **31**, the distance between neighboring pairs of weld strips **31**, and the spacing between neighboring pairs of strands **32** can be set to any values as required or desired by an intended use, such as in a particular inflatable product.

These planar, parallel and even spaced strands **32** are then passed in to welder **40**, as shown in FIG. **7**. Welder **40** may be a thermofusion device, using heat to join two plastic materials together, or may be a high-frequency welder, in which electromagnetic waves take advantage of excitable chemical dipoles in the plastic material to soften and join the materials to one another. Moreover, any suitable welding method may be employed by welder **40**, as required or desired for a particular material and process. Another alternative is to forego a welding process and use adhesive to join strands **32** to weld strips **31**. Where adhesive connection is utilized, welder **40** may be replaced by a similarly arranged adhesive device, such as a gluing device. Yet another alternative is to utilize a sewing machine to mechanically join weld strips **31** to strands **32**. Moreover, weld strips **31** need not be welded to upper or lower materials **1**, **2**, and the term "weld strip" as used herein refers to any strip of material suitable for affixation to another material, whether by application of heat, application of adhesive, mechanical joining methods such as sewing and riveting, or any other suitable method.

Weld strips **31**, having a length corresponding to the width of the arranged plurality of strands **32**, are positioned on lower dies B**1** of welder **40**. Strands **32** are advanced over weld strips **31** as illustrated, and upper dies B**2** are then lowered into contact with weld strips **31**. Energy (i.e., heat or electromagnetic waves) is applied to fixedly connect the weld strip **31** with each of the plurality of strands **32** such that the respective strands **32** are fixed in the spaced apart and parallel configuration dictated by strand guide A. When so fixed, bulk material **30** (FIG. **9**) is complete and ready for use.

The finished bulk material **30** may then be delivered to a take-up device (not shown), such as a spool or roll. This allows bulk material **30** to be continuously produced and stored for later use. Bulk material **30** can be converted into tensioning structure **3** (FIG. **2**) by cutting down the center of weld strip **31**. Tensioning structure **3** can then be applied to various inflatable products by trimming the length and width thereof according to the dimensions of the product.

As noted above, reinforcement strand **5** may be added to tensioning structure **3** to further improve the strength thereof, including the tensile strength of weld strips **31**. To add at least one reinforcement strand **5** to bulk material **30**, reinforcement strands **5** are arranged perpendicular to the plurality of strands **32**, and abutting the respective weld strips **31**. Upper die B**2** of welder **40** is pressed down to fixedly connect the weld strips **31** to both reinforcement strands **5** and the plurality of strands **32**, as described above. Reinforcement strands **5** are illustrated in FIG. **3** but omitted from FIG. **4** for clarity.

As shown in FIG. **4**, tensioning structures **30** are positioned within band **4** and welded to upper and lower sheet **1**, **2**. Although shown as perpendicular to sheets **1**, **2** in FIG. **4**, after welding, weld strips **31** lay flat on sheets **1**, **2** after welding as shown in the lower portion of FIG. **1**. Similarly, in mattresses **10** of FIGS. **6**, **21**, **23**, and **28**, weld strips **31** are shown perpendicular to sheets **1**, **2**, but will lay flat on sheets **1**, **2** upon welding as shown in the lower portion of FIG. **1**.

As illustrated in FIGS. **8** and **9**, bulk material **30** (FIG. **9**) may be formed using a single layer of weld strips **31** connecting to strands **32**. In another exemplary embodiment shown in FIGS. **10** and **11**, bulk material **30** may be manufactured as a dual layer structure using a pair of weld strips both above and below strands **32**. The use of two mutually opposed weld strips employs a gripping action to "trap" or capture the strands **32** therebetween, thereby contributing to a high-strength coupling interface. When implemented in an inflatable product, the resulting dual-layer tensioning structure **3** has improved strength and can be welded to upper or lower material **1**, **2** (FIGS. **1**, **3** and **4**) on either side. As shown in FIGS. **10** and **11** and discussed above, at least one reinforcement strand **5** may also be captured between the weld strips **31**.

2. Sheet-Backed Tensioning Structures with Affixed Strands.

An alternatively arranged tensioning structure is shown in FIGS. **12** and **13** as tensioning structure **103**. Structure **103** is substantially similar to tensioning structure **3** described above, with reference numerals of structure **103** analogous to the reference numerals used in structure **3**, except with **100** added thereto. Elements of structure **103** correspond to similar elements denoted by corresponding reference numerals of structure **3**, except as otherwise noted.

Tensioning structure **103** includes a plurality of strands **32** which are evenly spaced and arranged substantially parallel to one another, in a similar fashion to tensioning structure **3** described above. However, tensioning structure **103** includes weld sheet **131** in place of weld strips **31** of structure **3**. Rather than affixing the ends of strands **32** to weld strips **31**, the entire length of strands **32** are affixed to weld sheet **131**. Weld sheet **131** serves to provide for proper positioning and protection of the plurality of strands **32**, such as to avoid knotting or damage of strands **32** during practical use. However, because tensioning structure **103** includes strands **32** embedded therein, weld sheet **131** does not need to bear significant tensile loads and can be kept to a minimal thickness. For example, weld sheet **131** may be 0.10 millimeters in thickness.

In FIGS. **12** and **13**, a single weld sheet **131** is used, though other arrangements are contemplated. FIG. **14**, for example, illustrates tensioning structure **103** (FIG. **13**) with an extra weld sheet **131** applied opposite the first weld sheet **131**. Similar to the embodiment of tensioning structure **3** using mutually opposed weld strips **31** (FIGS. **10** and **11**), the mutually opposed weld sheets **131** may be used to encapsulate strands **32**.

FIGS. **15** and **16** illustrate tensioning structure **203**, which is substantially similar to tensioning structure **3** described above, with reference numerals of structure **203** analogous to the reference numerals used in structure **3**, except with **200** added thereto. Elements of structure **203** correspond to similar elements denoted by corresponding reference numerals of structure **3**, except as otherwise noted. However, structure **203** represents a hybrid approach combining elements of tensioning structures **3** and **103**, in which a plurality of weld strips **31** are used to encapsulate a portion of strands **32** between strips **31** and weld sheet **131**. The addition of weld strips **31** to the weld sheet **131** improves the strength of the weld connection between tensioning structure **203** and the adjacent product material (e.g., upper and/or lower material **1**, **2** of inflatable bed **10** shown in FIGS. **2** and **3**).

FIG. **17** illustrates tensioning structure **303**, which is substantially similar to tensioning structure **3** described above, with reference numerals of structure **303** analogous to the reference numerals used in structure **3**, except with **300** added thereto. Elements of structure **303** correspond to similar elements denoted by corresponding reference numerals of structure **3**, except as otherwise noted. Moreover, structure **303** incorporates all the elements of tensioning structure **203** but adds a second, lower layer of weld strips **31** attached to weld sheet **131** opposite the first, upper layer of weld strips **31**. Thus, there is a dual-layer structure of opposing weld strips **31** further augmenting weld sheet **131**, rendering tensioning structure **303** very strong and robust both along the extent of strands **32** and at the weld between strands **32** and the adjacent material, e.g., material **1**, **2** of inflatable bed **10** (FIGS. **3** and **4**).

Turning to FIGS. **18** and **19**, yet another tensioning structure **403** is illustrated. Tensioning structure **403** is substantially similar to tensioning structure **3** described above, with reference numerals of structure **403** analogous to the reference numerals used in structure **3**, except with **400** added thereto. Elements of structure **403** correspond to similar elements denoted by corresponding reference numerals of structure **3**, except as otherwise noted. However, the plurality of strands **32** used in structure **403** are discontinuous. As shown in FIGS. **13** and **14**, the plurality of strands **32** may be trimmed to any desired length, and then affixed to weld sheet **131** by hot pressing. Upon installation into an inflatable product use, the affixed strands **32** may be cut to length, and welded into place as described above. Thus, using tensioning structures **403** has the potential to reduce consumption of the material used for strands **32** and avoid unnecessary waste thereto, thereby lower material cost.

Optionally, as shown in FIG. **20**, each end of the weld sheet **131** (i.e., at the ends of strands **32**) may include a reinforcing strand **5** arranged similarly to tensioning structure **3** discussed above. Reinforcing strands **5** are omitted from FIG. **21** for clarity.

The sheet-backed embodiments illustrated as tensioning structures **103**, **203**, **303** and **403** in FIGS. **12-19** may be integrated into an inflatable device in a similar fashion as tensioning structures **3** described above. For example, FIGS. **20** and **21** illustrate integration of tensioning structures **103** into inflatable bed **10**, which is accomplished by the same method as described above.

Tensioning structures **103**, **203**, **303** and **403** may also be formed into a variety of geometric configurations, as discussed above with respect to tensioning structure **3**. These configurations include a wave-like path, I-shaped path, Z-shaped path or V-shaped path. As illustrated in FIGS. **22** and **23**, is a cylindrical or columnar arrangement may also be utilized. In this arrangement, weld sheet **131** (and upper and lower weld strips **31**, if present) is connected at its ends in an end-to-end manner to form an arcuate ring, such as a circular ring as illustrated. The plurality of strands **32** between thus cooperate with the material of weld sheet **131** to form a closed columnar periphery, thereby forming the body of a column. The axial ends of this columnar structure can then be welded to upper material **1** and lower material **2**, respectively, of inflatable bed **10**.

Turning now to FIG. **24**, an apparatus **120** suitable for manufacturing tensioning structures **103**, **203**, **303** or **403** is shown. Operation of apparatus **120** is accomplished by first supplying a plurality of strands **32** from a yarn stand or other stock of yard, as described above with respect to apparatus **20**. Strands **32** are continuously delivered via strand guide A, described above, which provides uniformly spaced apart and parallel strands **32** to the downstream welder **140**.

Welder **140** includes a conveying roller C downstream of strand guide A, which continuously delivers a weld sheet **131** of width sufficient to correspond to the width of the plurality of strands **32**. Downstream of roller C, the plurality of strands **32** are near to or abutting weld sheet **131**.

The plurality of strands **32** and weld sheet **131** then advance together through hot roller D, which heats and compresses the material such that strands **32** become fixed to the softened material of weld sheet **131**. After passage through roller D, tensioning structure **103** as shown in FIG. **13** is complete. The bulk material for tensioning structure **103** may be wound onto a take-up spool for later cutting into a tensioning structure **103** of appropriate size for a particular application.

When the thus tensioning structure **103** is applied to an inflatable product such as inflatable bed **10** (FIGS. **21** and **22**), the weld sheet **131** may have a relatively small thickness given the level of internal pressure (and, therefore, tension) expected to be encountered by structure **103** during inflation and use of the product. For example, the thickness may be reduced by 20%-40% with respect known internal tensioning structures lacking strands **32**. Because strands **32** are positioned and configured to bear the tensile loads applied to tensioning structure **103**, weld sheet **131** need only provide for proper positioning and protection of the plurality of strands **32**, such as to avoid knotting or damage of strands **32** during practical use. In one exemplary embodiment, the thickness of weld sheet **131** may be as small as 0.10 millimeters.

Where a second weld sheet **131** is added to tensioning structure **103**, as shown in FIG. **14** and described above, a second roller C (not shown) may be provided opposite the illustrated roller C of FIG. **24**, such that rollers C are disposed on either side of strands **32**. Both sheets **131** are then passed through the hot pressing roller D, capturing strands **32** between the two layers of plastic sheets.

Where a plurality of weld strips **31** are added to create tensioning structure **203**, as shown in FIGS. **15** and **16** and described above, a finished tensioning structure **103** made using apparatus **120** may be further processed using apparatus **20** as shown in FIG. **7** and described above. After the intermediate sheeted product equivalent to tensioning structure **103** exiting from hot rollers D, weld strips **31** may be added to one or both sides of the intermediate sheeted product. At least one reinforcement strand **5** may be added as required or desired, such that reinforcement strands **5** are perpendicular to the plurality of strands **32**, as described in detail above.

Where weld strips **31** are added to both sides of a sheeted intermediate product to create tensioning structure **303**, a process similar to the above may be employed in which an

intermediate sheeted product exits rollers D and receives additional weld strips **31**. However, weld strips **31** are added to both sides instead of to a single side, in accordance with the method of manufacturing a dual-layer version of bulk material **30** using welder **40** as described above. Of course, at least one reinforcement strand **5** may be added in a similar fashion as previously described.

3. Weld Strips Joined by V-Shaped Strands.

An alternatively arranged tensioning structure is shown in FIGS. **25** and **26** as tensioning structure **503**. Structure **503** is substantially similar to tensioning structure **3** described above, with reference numerals of structure **503** analogous to the reference numerals used in structure **3**, except with **500** added thereto. Elements of structure **503** correspond to similar elements denoted by corresponding reference numerals of structure **3**, except as otherwise noted.

However, strand **532** in tensioning structure **503** have a staggered, V-shaped arrangement, and may be formed from a single strand wound back and forth rather than a plurality of separate and discrete strands as used in tensioning structure **3** for example. As described below in the context of the method of manufacture of tensioning structure **503**, strand **532** may be a single, continuous strand woven between weld strips **31**, **31'**, with the point of each "V" affixed to at least one of the weld strips **31**, **31'**.

Turning now to FIG. **29**, an apparatus **220** suitable for manufacturing tensioning structure **503** is shown. Operation of apparatus **220** is accomplished by disposing a lower pair of weld strips **31** such that the lower pair are substantially parallel and spaced apart upon joining device **540**. In the illustrated embodiment, weld strips **31** are unspooled from rolls of weld strip material contained within a pair of unreeling devices **550**.

Next, continuous strand **532** is wrapped successively around a set of adjacent hook-shaped members **541** disposed at either side of joining device **540**, with the plurality of hook-shaped members **541** arranged in two respective rows corresponding to the location of the previously-placed lower pair of weld strips **31**. In an exemplary embodiment, hook-shaped members **541** are uniformly spaced from one another and arranged at the outer sides of lower pair of weld strips **31**, with each row of hook-shaped members **541** offset with respect to the other row. With this arrangement, the continuous strand **532** forms a plurality of end-to-end "V" shaped strands when wrapped around successive hook-shaped members **541** in alternating rows thereof, as shown. That is to say, the corner of each "V" is formed at a respective hook-shaped members **541**, and successive corners traced along continuous strand **532** will alternate between rows of hook-shaped members **541**.

Next, a second pair of weld strips **31'** are positioned over the first pair of weld strips **31**, respectively, and are clamped thereto such that each "V" shaped corner formed by strand **532** is disposed between one of the first pair of weld strips **31** and the abutting one of the second pair of weld strips **31'**. The second pair of weld strips **31'** may also be unspooled from unreeling devices **550**.

Finally, the abutting pairs of weld strips **31**, **31'** are joined to one another and to strand **532**, such as by welding or by one of the other attachment methods discussed above. For example, weld strips **31**, **31'**, may be joined by a high frequency welder or another thermofusion device. It is also contemplated that strand **532** can be fixed to weld strips **31**, **31'**, and weld strips **31** can be fixed to weld strips **31'**, by adhesive or by sewing.

As with other tensioning structures discussed above, tensioning structure **503** may be produced and stored in bulk and later applied to various inflatable products. The length and width of tensioning structure **503** may be trimmed to accommodate the internal length or width of the inflatable product.

In one alternative embodiment, it may be not necessary to provide the second layer of weld strips **31'**, and instead to fix only the first layer of weld strips **31** to the strand **532**. Fixing strand **532** to the single layer of weld strips **31** may be accomplished in a similar fashion to the single-layer weld strip and weld sheet embodiments described above.

Turning to FIGS. **30-32** tensioning structure **503** may also be provided with at least one reinforcement strand **5** extending along the longitudinal extent of at least one of weld strips **31**, **31'**. Similar to the uses of reinforcement strands **5** in the embodiments described above, reinforcement strands **5** may be arranged on one of the lower pair of weld strips **31** and/or between the lower and upper pairs of weld strips **31**, **31'**.

A tensioning structure in accordance with the present disclosure, including tensioning structures **3**, **103**, **203**, **303**, **403** and **503** discussed above, has a high tensile strength along the axial extent of the strands **32**, **532** extending between respective weld strips and/or along weld sheets. This high tensile strength is complemented with a full-strength weld between the adjacent material of an inflatable product, which is facilitated by the full surface-area contact provided by the weld strip and/or weld sheet interface between strands **32**, **532** and such adjacent material. In this way, the tensioning structure performs well an internal structure of the inflatable product, while facilitating an overall reduction in weight and deflated/folded volume of the inflatable product. For example, a loose arrangement of strands **32** is significantly lighter than a one-piece sheet of comparable size and tensile strength.

Where weld sheets **131** are employed, such sheets act to ensure a consistent position and arrangement of the plurality of strands **32** (or **532**), thereby prevent such strands from becoming wound or otherwise entangled with one another. Meanwhile, weld strips **31** can be utilized to provide a robust structure for welding the tensioning structure into the inflatable product, thereby ensuring that the high tensile strength offered by the strands of the tensioning structure is fully realized. In addition, the use of weld sheet **131** can significantly reduce the weight of the entire inflatable product with respect to a traditional, relatively thicker one-piece sheet which is also responsible for handling tensile loading. In other words, weld sheet **131** reduces by 20%-40% in thickness with respect to an existing tensioning structures having comparable thicknesses of 0.36 mm to 0.8 mm as noted above.

As illustrated in FIG. **33**, tensioning structures **3** have a distance **39** between adjacent tensioning structures **3**. As discussed above, strands **32** have a length **37** that approximates a height **37** of tensioning structures **3** when mattress **10** is inflated. During construction of typical mattresses using PVC tensioning structures (not shown), the height of PVC tensioning structures is practically limited by the distance between adjacent PVC tensioning structures. This limitation is the result of the typical manufacturing process wherein the PVC tensioning structures are all aligned on a lower sheet **2** and simultaneously welded to lower sheet **2**. If the PVC tensioning structures are too tall, they will overlap adjacent PVC tensioning structures causing adjacent PVC tensioning structures to be welded together and resulting in dysfunctional PVC tensioning structures. To increase the height of PVC tensioning structures, the PVC tensioning structures may be folded in half along their length while one edge is being welded. By folding the PVC tensioning structure, the maximum height may be increased to slightly less than twice the distance between adjacent PVC tensioning structures (ex. 15

millimeters less than twice the height of the PVC tensioning structure). Providing more than one fold is impracticable.

Because gap portions **33** of tensioning structures **3** are made of strands **32** rather than typical PVC sheets discussed above, they are much more flexible than typical PVC tensioning structures. As a result of this flexibility, mattresses **10** can be readily manufactured having heights **37** greater than twice distance **39** between adjacent tensioning structures **3**.

During manufacture, weld strips **31** of each of the plurality of tensioning structures **3** are aligned in their respective position for welding to lower sheet **1**. The other weld strip **31** of these tensioning structures **3** are moved adjacent to the weld strip **31** to be welded as shown in FIG. **33**. Because of their flexibility, strands **32** bunch on top of themselves or on top of nearby strands **32** allowing multiple layers of strands **32** to readily lie on top of one another. By allowing multiple layers of strands **32** to lie on top of each other, height **37** of tensioning structures **3** can be greater than twice distance **39** between tensioning structures **3**. According to embodiments, length **37** of strands **32** may be 2, 2.5, 3, 3.5, 4, 4.5, 5, 5.5, 6 or more times longer than distance **39** between tensioning structures **3**.

As shown in FIG. **33**, loops **41** form in strands **32** during bunching and portions of strands **32** may be positioned under weld strip **31** that is currently not being welded. Although each strand **32** shown in FIG. **33** only has one loop **41** and is only overlapping one other strand **32**, each strand **32** may have multiple loops **41** and may overlap multiple other strands **32**, particularly when the distance between stands **32** along weld strips **31** is shorter than that illustrated in FIG. **33**.

In addition to the bunching arrangement shown in FIG. **33** to facilitate welding of weld strips **31** to lower sheet **2**, other orientations of long strands **32** can be used to prevent a portion of one tensioning structure **3** from overlapping an adjacent tensioning structure **3** during welding. For example, as shown in FIG. **35**, strands may be collected in piles **43** to account for moving welds strips **31** of each tensioning structure **3** adjacent each other. The turns of piles **43** account for the decreased distance between weld strips **31** when weld strips **31** are moved together. According to another example, weld strips **31** of each tensioning structure **3** are shifted along the extent or length of tensioning structures **3** as shown in FIG. **36**. The shifting results in strands **32** forming acute angles with weld strips **31** and accounts for the decreased distance between weld strips **31**. By accommodating strands **32** that are longer than the distance between adjacent tensioning structures **3**, tensioning structures **3** may be made taller without interfering with the process of welding tensioning structures **3** to upper and lower sheets **1**, **2**. As mentioned above, strands **32** may be longer than shown in FIGS. **33-36**. With such longer strands **32**, more or larger loops **41** (FIG. **33**), larger and/or taller piles **43** (FIG. **35**), or greater shifting (FIG. **36**) may be used to accommodate the longer strands **32** to avoid tensioning structures **3** overlapping during welding.

When prepared for shipping or storage, mattresses **10** are deflated. During deflation, strands **32** may bunch as shown in FIG. **33**. Further, strands **32** from adjacent tensioning structures **3** will contact each other and may become interleaved with strands **32** from one tensioning structure **3** positioned between strands **32** of another tensioning structure. Further, because strands **32** are very flexible, they collapse readily when contacted by other structures when mattress **10** is deflated for shipping or storage. For example, when strands **32** contact upper or lower sheets **1**, **2** when deflated, they comply to upper and lower sheets **1**, **2** to allow upper and lower sheets **1**, **2** to compact more closely. At least partially because of this compaction, the overall deflated volume of mattress **10** is reduced when compared to mattresses using PVC sheet tensioning structures. When collapsed, strands **32** from a tensioning structure **3** may become interleaved with strands **32** from the same tensioning structure **32**, loops **41** may form, piles **43** may form, and/or strands **32** may become angled to weld strips **31** in a manner similar to that shown in FIG. **36**.

As shown in FIG. **34**, when collapsed, strands **32** may be oriented in different directions with some overlapping as shown in the bottom two strands **32** and other following substantially the same direction as shown in the top three strands **32**. Some strands **32** collapse in directions that are not perpendicular to the extent of weld strips **31**. For example, the lowest-most strand **32** in FIG. **34** leaves left-most weld strip **31** is a perpendicular direction to this weld strip **31**, turns up to be parallel to this weld strip **31**, returns to perpendicular to this weld strip **31**, turns down to be parallel to this weld strip **31**, and then loops under this weld strip **31** to attached to the other weld strip **31** in a perpendicular direction to the other weld strip **31**. According to some embodiments, the overall folded or deflated volume of mattress **10** may be 8-25% less than comparable mattresses with PVC sheet tensioning structures. According to the preferred embodiment, the volume is about 16% less.

A tensioning structure in accordance with the present disclosure is also a low-cost option for imparting a desired structure and shape to an inflatable device. For example, a large reduction in PVC material may be achieved by use of the present tensioning structure, as compared to a one-piece sheet of comparable size and tensile strength.

While the disclosure has been described as having exemplary designs, the present disclosure can be further modified within the spirit and scope of this invention. This application is therefore intended to cover any variations, uses or adaptations of the disclosure using its general principles. Further, this application is intended to cover such departures from the present disclosure as come within known or customary practice in the art to which this disclosure pertains.

What is claimed is:

1. A method for producing a tensioning structure of an inflatable product, the method comprising:

aligning a plurality of strands with a strand guide,

positioning a first weld strip adjacent to the plurality of strands;

positioning a second weld strip adjacent to the plurality of strands with the plurality of strands positioned between the first and second weld strips;

positioning third and fourth welds strips adjacent to the plurality of strands spaced apart from the first and second weld strips;

positioning the plurality of strands into at least one of a welder and an adhesive device; and

activating the welder or adhesive device to fixedly connect the first weld strip to the plurality of strands and couple the first and second weld strips together and the third and fourth weld strips together.

2. The method of claim **1**, further comprising step of cutting the first weld strip along its longitudinal length after the activating step.

3. The method of claim **1**, further comprising the step of coupling the first weld strip to an interior surface of an inflatable product.

4. The method of claim **1**, further comprising a step of coupling at least one of the first and second weld strips to a first sheet of an inflatable product and coupling at least one of the third and fourth weld strips to a second sheet an inflatable product.

5. The method of claim **4**, further comprising a step of cutting the first, second, third, and fourth weld strips along their longitudinal length before the coupling step.

* * * * *

UNITED STATES PATENT AND TRADEMARK OFFICE

CERTIFICATE OF CORRECTION

PATENT NO. : 8,562,773 B2
APPLICATION NO. : 13/668799
DATED : October 22, 2013
INVENTOR(S) : Hua Hsiang Lin et al.

It is certified that error appears in the above-identified patent and that said Letters Patent is hereby corrected as shown below:

On the Title page in item "(30) Foreign Application Priority Data," delete "201210053183" and insert --201210053143--.

Signed and Sealed this
Tenth Day of May, 2016

Michelle K. Lee

Michelle K. Lee
Director of the United States Patent and Trademark Office