US 20050076449A1

(19) United States

(12) Patent Application Publication

(10) Pub. No.: US 2005/0076449 A1

(43) Pub. Date: Apr. 14, 2005

Yuan

(54) INFLATABLE ARTICLE AND PROCESS FOR MANUFACTURING THE SAME

(76) Inventor: **Hank W.C. Yuan**, Taipei City (TW)

Correspondence Address:
LADAS & PARRY LLP
224 SOUTH MICHIGAN AVENUE
SUITE 1200
CHICAGO, IL 60604 (US)

(21) Appl. No.: **10/403,957**

(22) Filed: **Mar. 31, 2003**

(30) **Foreign Application Priority Data**

Jan. 30, 2003 (CN) 03202257.3

Publication Classification

(51) **Int. Cl.**[7] **B32B 31/00**

(52) **U.S. Cl.** **5/932**; 156/292; 156/308.2

(57) **ABSTRACT**

In a process for manufacturing an inflatable article, box-like upper and lower mattress bodies of similar dimensions are superimposed upon each other. The upper mattress body includes first upper and lower sheets, and a first interconnecting strip interconnecting peripheral areas of the first upper and lower sheets. The lower mattress body includes second upper and lower sheets, and a second interconnecting strip interconnecting peripheral areas of the second upper and lower sheets. Junctures of the first lower sheet and the second upper sheet are united by heat-sealing so as to form a surrounding clearance between the junctures and peripheries of the sheets for retaining a bedcover.

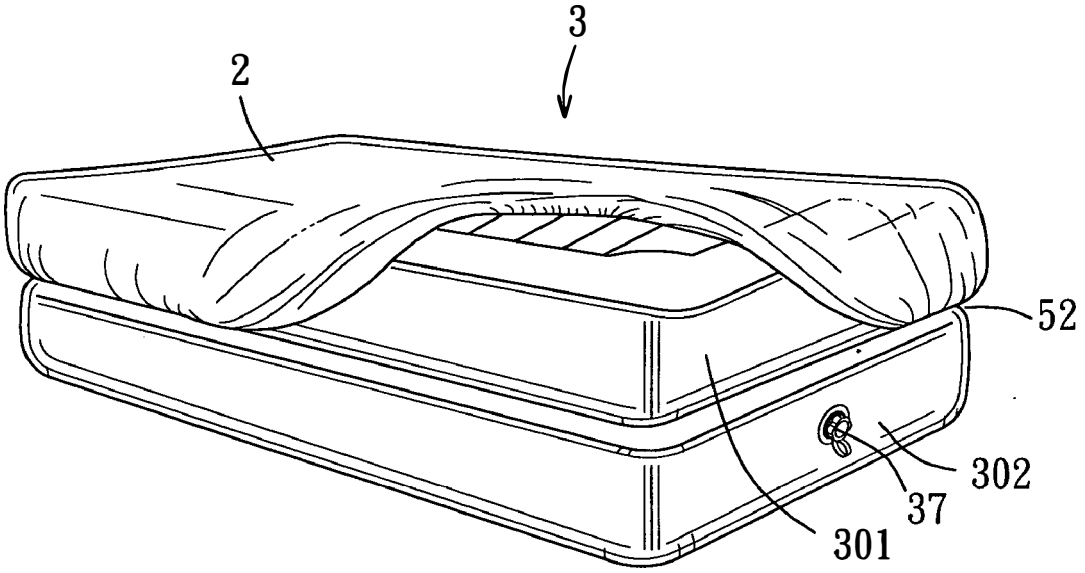

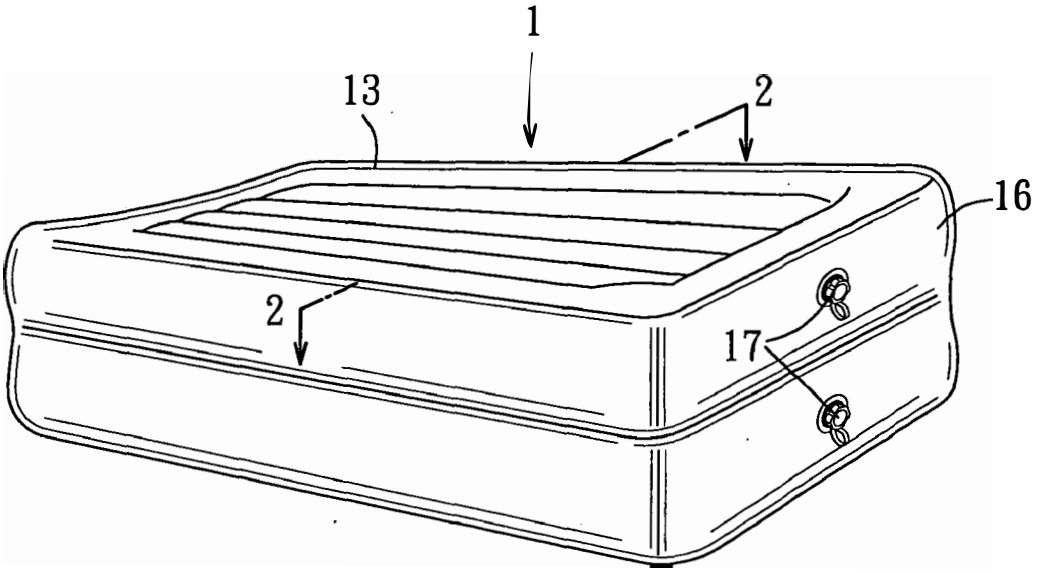

FIG. 1
PRIOR ART

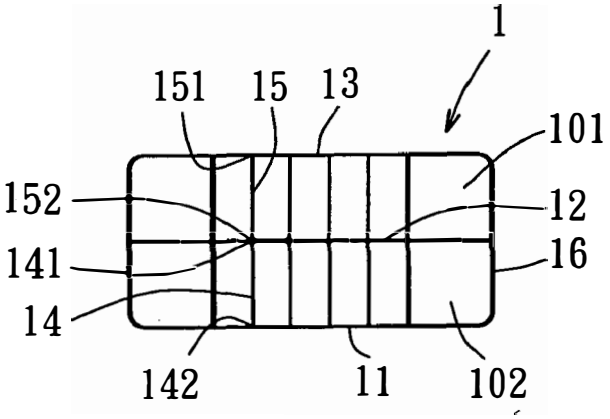

FIG. 2
PRIOR ART

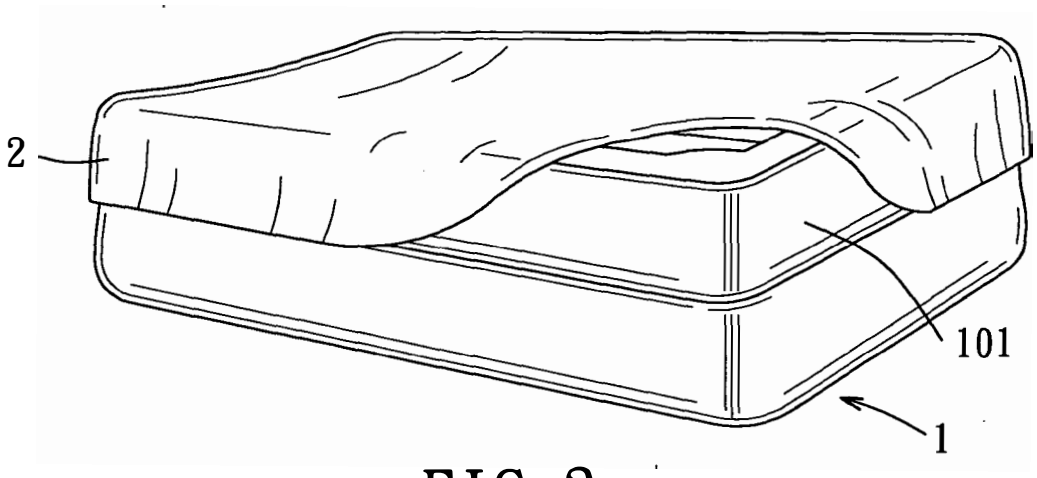

FIG. 3
PRIOR ART

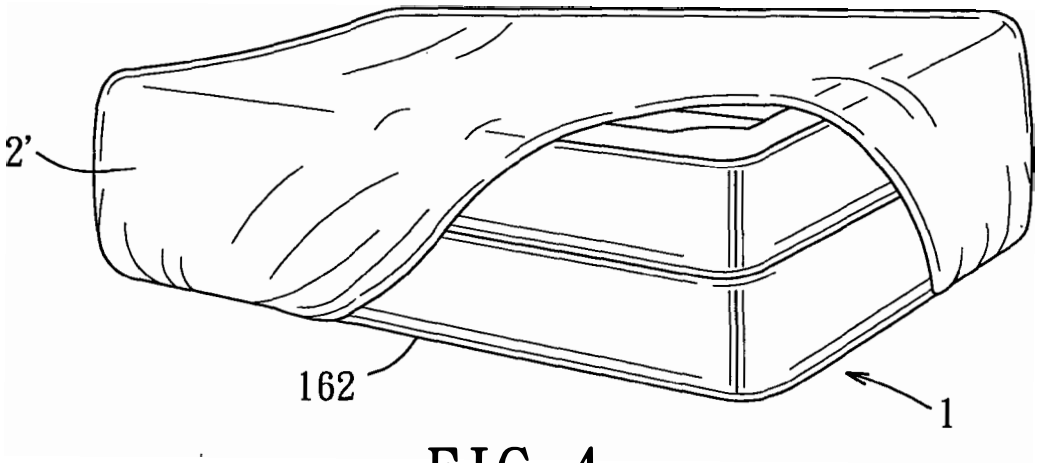

FIG. 4
PRIOR ART

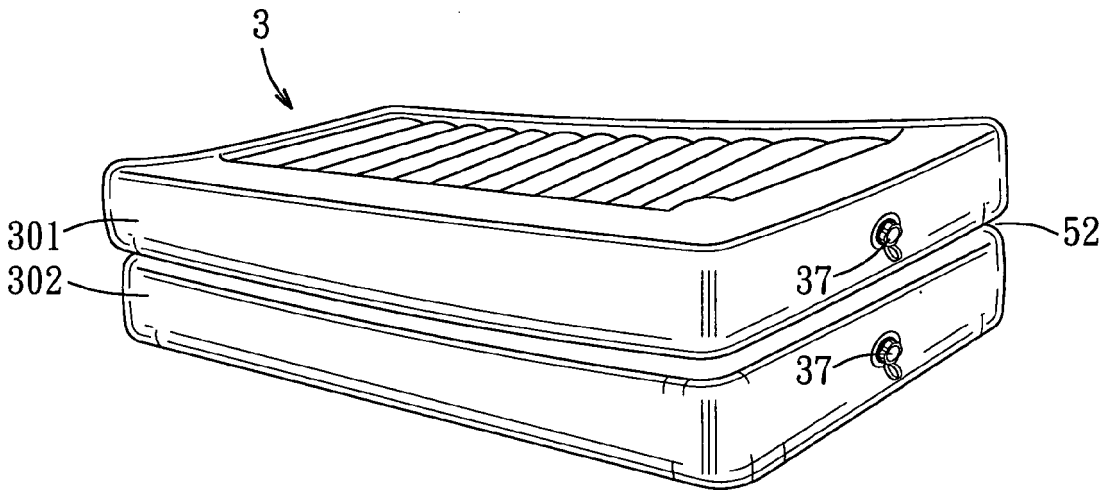

FIG. 5

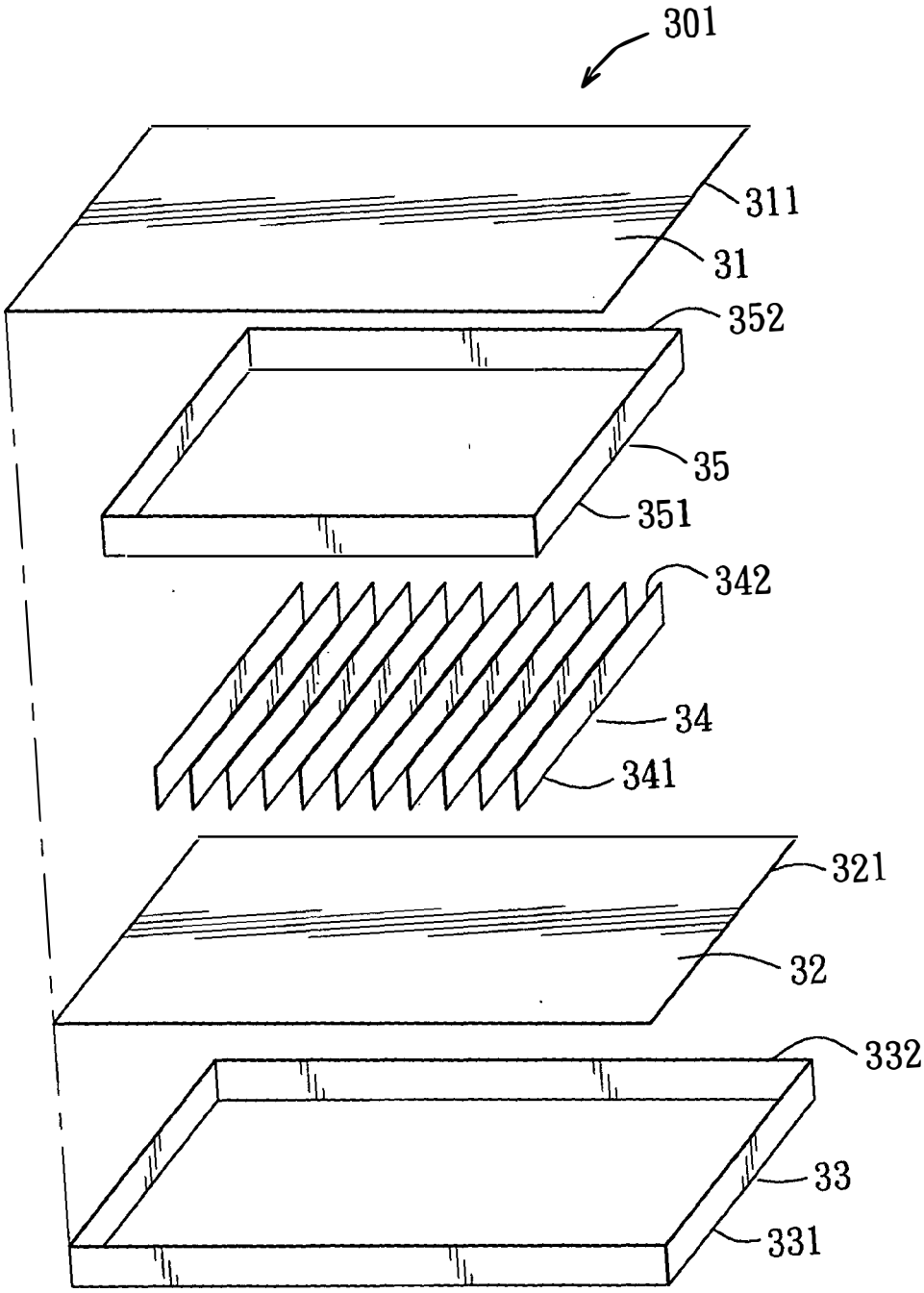

FIG. 6

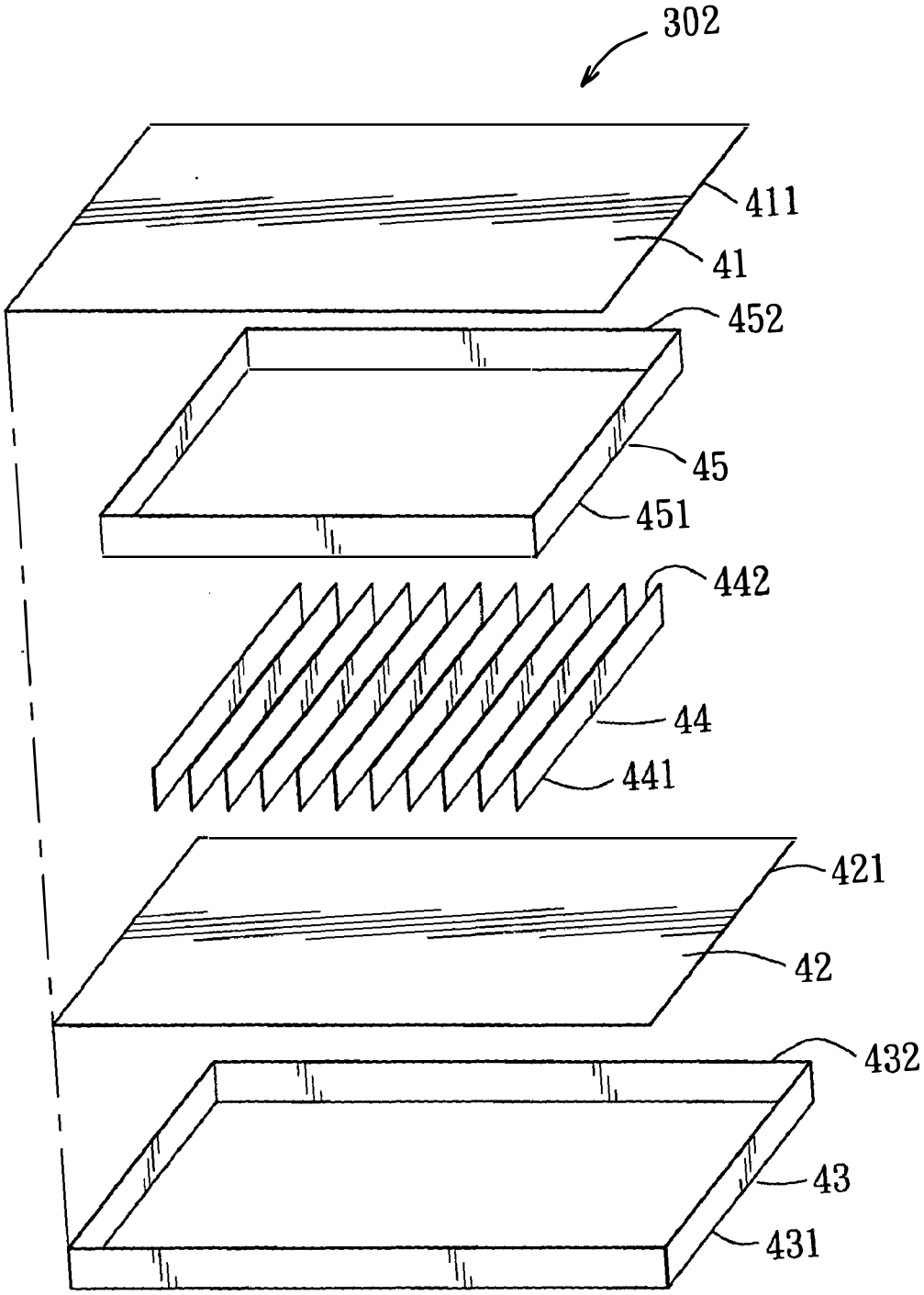

FIG. 7

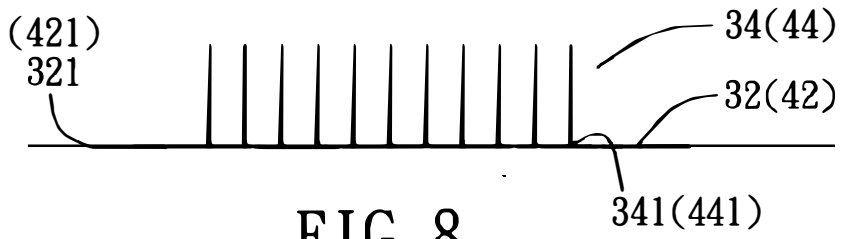

FIG. 8

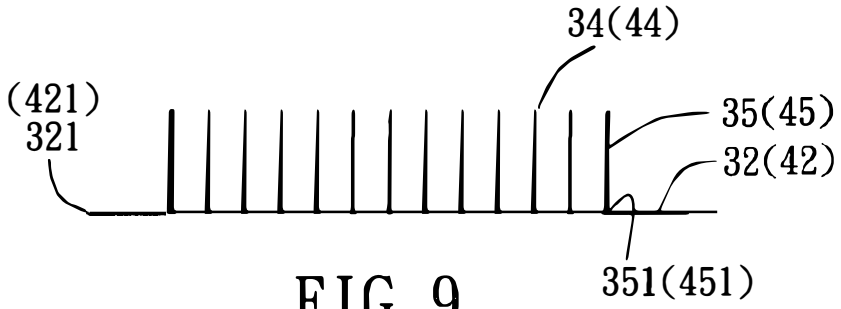

FIG. 9

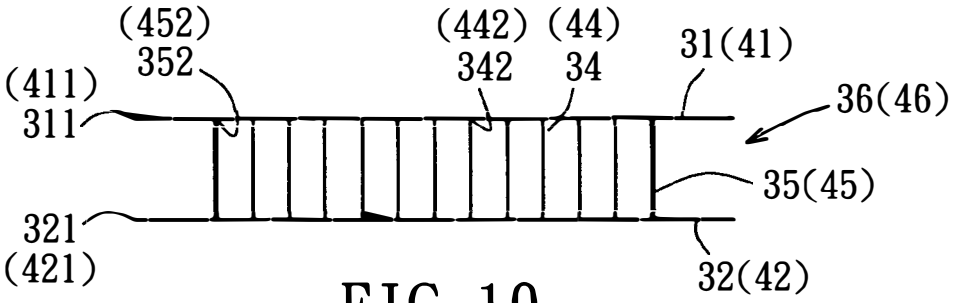

FIG. 10

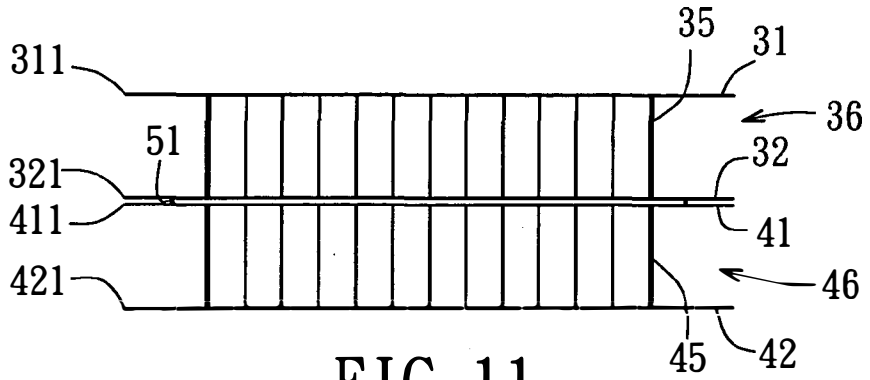

FIG. 11

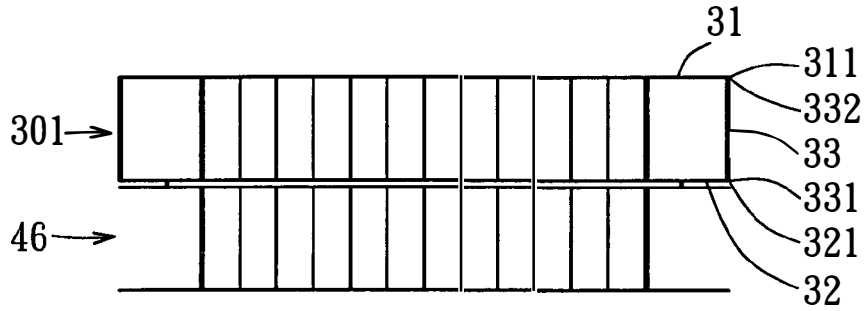

FIG. 12

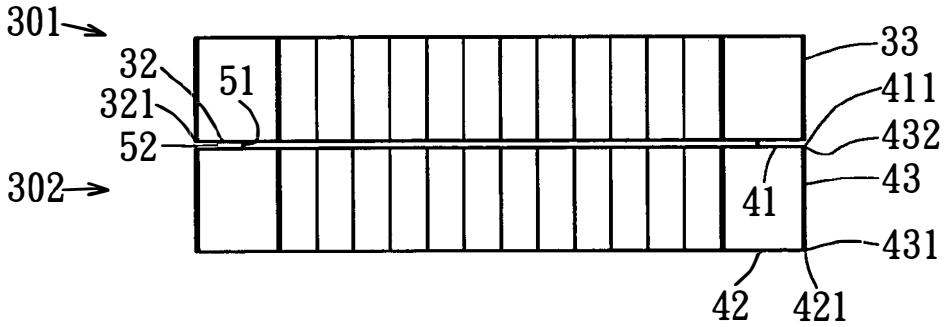

FIG. 13

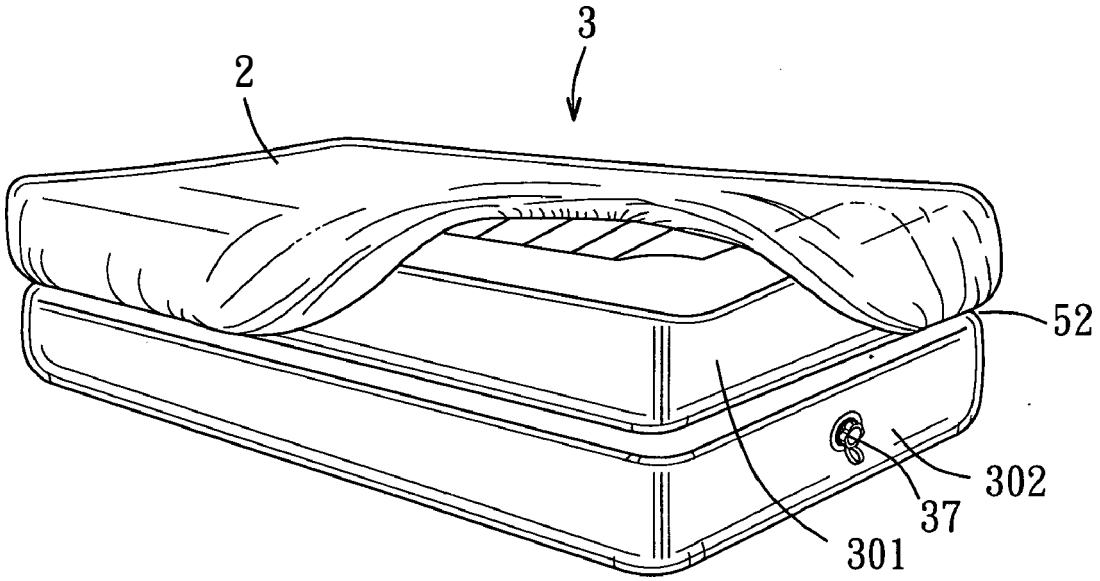

FIG. 14

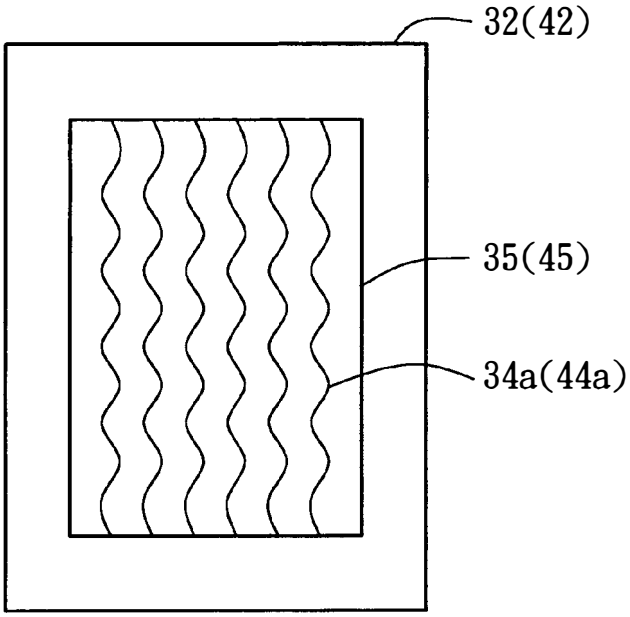

FIG. 15

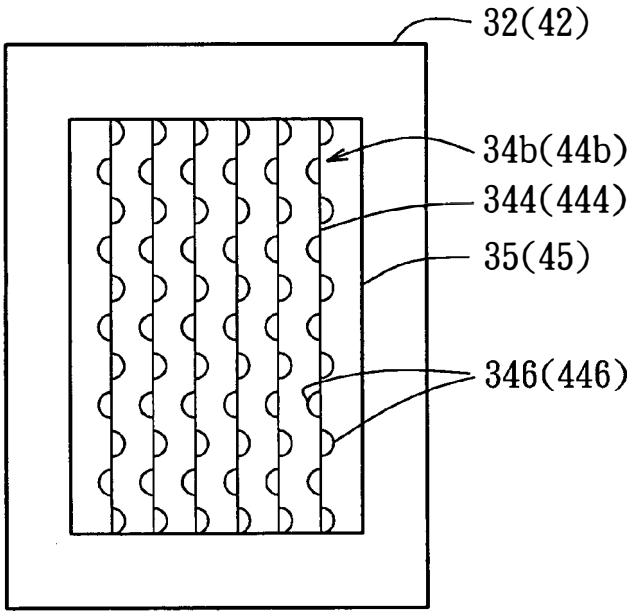

FIG. 16

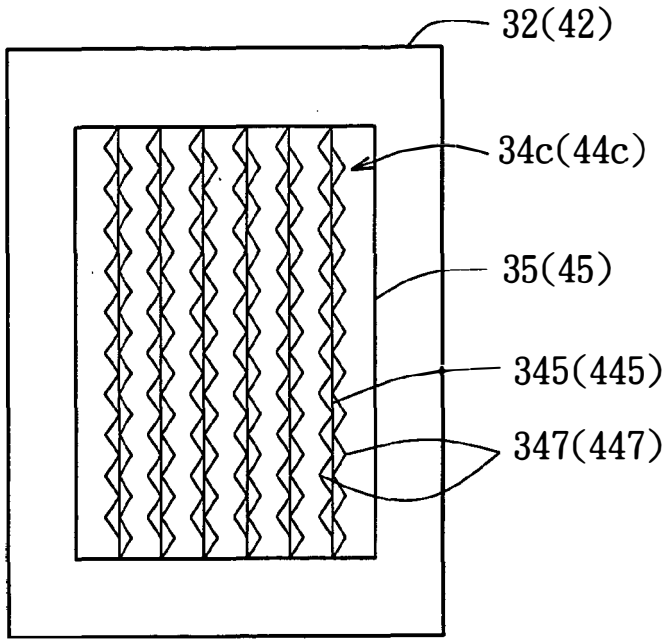

FIG. 17

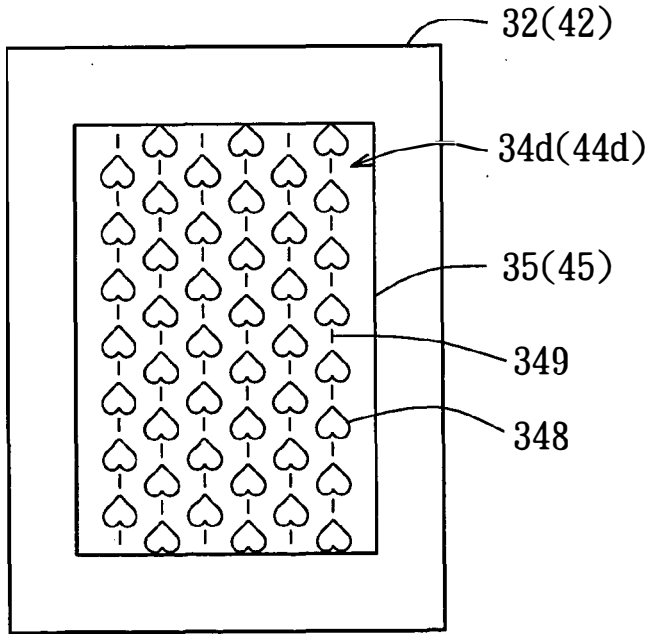

FIG. 18

INFLATABLE ARTICLE AND PROCESS FOR MANUFACTURING THE SAME

CROSS-REFERENCE TO RELATED APPLICATION

[0001] This application claims priority of Chinese patent Application No. 03202257.3, filed on Jan. 30, 2003.

BACKGROUND OF THE INVENTION

[0002] 1. Field of the Invention

[0003] This invention relates to an inflatable article, more particularly to an inflatable article for use as a mattress, which includes upper and lower mattress bodies with similar dimension, that are securely superimposed upon each other.

[0004] 2. Description of the Related Art

[0005] Referring to **FIGS. 1 and 2**, a conventional inflatable mattress **1** is shown to include upper and lower mattress bodies **101,102** which are superimposed upon each other. The upper mattress body **101** is used as a bed body on which the user can arrest, while the lower mattress body **102** is used as a bed frame for supporting the bed body. The method for manufacturing the inflatable mattress **1** includes the step of connecting lower ends **142** of a plurality of bracing strips **14** (PVC material) to a first sheet **11** (PVC material), and connecting upper ends **141** of the bracing strips **14** to a second sheet **12** (PVC material) by using a heat-sealing device (not shown). Then, lower ends **152** of a plurality of bracing strips **15** (PVC material) are connected to the second sheet **12**, and upper ends **151** of the bracing strips **15** are connected to a third sheet **13** (PVC material) by heat-sealing. Subsequently, an interconnecting strip **16** (PVC material) is used to interconnect, by heat sealing, peripheries of the first, second and third sheets **11,12,13** and the interconnecting strip **16** so as to form the upper and lower mattress bodies **101,102** with upper and lower air chambers. Two valves **17** are disposed on the upper and lower mattress bodies **101,102** to admit entrance of air into the air chambers.

[0006] In use, referring to **FIG. 3**, due to the combined thickness of the upper and lower mattress bodies **101,102**, a standard-size bedcover **2** can only cover the upper mattress body **101**, and cannot be tucked under the mattress **1**. Thus, referring to **FIG. 4**, a customized bedcover **2'** of particular size is needed to completely cover the mattress **1** and to be retained at a bottom **162** of the mattress **1**.

SUMMARY OF THE INVENTION

[0007] The object of the present invention is to provide a process for manufacturing an inflatable article that can be adapted for use with a standard-size bedcover.

[0008] According to a first aspect of this invention, a process for manufacturing an inflatable article comprises the steps of:

[0009] i) providing a first lower sheet that is formed from a heat-sealable and flexible material, the first lower sheet including a first central area, a first peripheral area surrounding the first central area, and a first juncture joining the first central and peripheral areas;

[0010] ii) providing a plurality of first bracing strips that are formed from a heat-sealable and flexible material, each of the first bracing strips having first upper and lower ends opposite to each other;

[0011] iii) connecting the first lower ends to the first central area by heat-sealing such that the first lower ends are displaced from one another in the first central area;

[0012] iv) providing a second upper sheet that is formed from a heat-sealable and flexible material, the second upper sheet including a second central area, a second peripheral area surrounding the second central area, and a second juncture joining the second central and peripheral areas;

[0013] v) providing a plurality of second bracing strips that are formed from a heat-sealable and flexible material, each of the second bracing strips having second upper and lower ends opposite to each other;

[0014] vi) connecting the second upper ends to the second central area by heat-sealing such that the second upper ends are displaced from one another in the second central area;

[0015] vii) uniting the first juncture and the second juncture by heat-sealing;

[0016] viii) connecting a third central area of a first upper sheet and a fourth central area of a second lower sheet respectively to the first upper ends of the first bracing strips and the second lower ends of the second bracing strips, respectively, by heat-sealing, such that once the first central area and the third central area are pulled away from each other, a plurality of upper air chambers are formed between the first upper and lower sheets by the first bracing strips, and such that once the second central area and the fourth central area are pulled away from each other, a plurality of lower air chambers are formed between the second upper and lower sheets by the second bracing strips; and

[0017] ix) using a first interconnecting strip that is formed from a heat-sealable and flexible material to interconnect, by heat sealing, the first peripheral area of the first lower sheet and a third peripheral area of the first upper sheet which surrounds the third central area such that the first interconnecting strip encloses and conceals the upper air chambers; and

[0018] x) using a second interconnecting strip that is formed from a heat-sealable and flexible material to interconnect, by heat sealing, the second peripheral area of the second upper sheet and a fourth peripheral area of the second lower sheet which surrounds the second central area such that the second interconnecting strip encloses and conceals the lower air chambers.

[0019] According to a second aspect of the invention, an inflatable article is manufactured by the aforesaid process.

[0020] According to a third aspect of this invention, a process for manufacturing an inflatable article comprises the steps of:

[0021] i) providing a first lower sheet that is formed from a heat-sealable and flexible material, the first lower sheet including a first central area, a first peripheral area surrounding the first central area, and a first juncture joining the first central and peripheral areas;

[0022] ii) providing a second upper sheet that is formed from a heat-sealable and flexible material, the second upper sheet including a second central area, a second peripheral area surrounding the second central area, and a second juncture joining the second central and peripheral areas;

[0023] iii) uniting the first juncture and the second juncture by heat-sealing;

[0024] iv) providing a first interconnecting strip that is formed from a heat-sealable and flexible material and that has first upper and lower strip ends opposite to each other;

[0025] v) connecting the first lower strip end of the first interconnecting strip to the first peripheral area of the first lower sheet by heat-sealing such that the first lower strip end surrounds the first central area;

[0026] vi) providing a second interconnecting strip that is formed from a heat-sealable and flexible material and that has second upper and lower strip ends opposite to each other;

[0027] vii) connecting the second upper strip end of the second interconnecting strip to the second peripheral area of the second upper sheet by heat-sealing such that the second upper strip end surrounds the second central area; and

[0028] viii) connecting a third peripheral area of a first upper sheet and a fourth peripheral area of a second lower sheet to the first upper strip end of the first interconnecting strip and the second lower strip end of the second interconnecting strip, respectively, by heat sealing so as to confine upper and lower air chambers, respectively.

BRIEF DESCRIPTION OF THE DRAWINGS

[0029] Other features and advantages of the present invention will become apparent in the following detailed description of the preferred embodiments of the invention, with reference to the accompanying drawings, in which:

[0030] **FIG. 1** is a perspective view of a conventional inflatable mattress;

[0031] **FIG. 2** is a sectional view taken along lines **2-2** in **FIG. 1**;

[0032] **FIG. 3** is a perspective view showing the conventional inflatable mattress used with a standard-size bedcover;

[0033] **FIG. 4** is a perspective view showing the conventional inflatable mattress used with a customized bedcover;

[0034] **FIG. 5** is a perspective view of the first preferred embodiment of an inflatable article according to this invention;

[0035] **FIG. 6** is an exploded perspective view of an upper mattress body of the first preferred embodiment;

[0036] **FIG. 7** is an exploded perspective view of a lower mattress body of the first preferred embodiment;

[0037] FIGS. **8** to **10** are sectional views showing the steps of manufacturing the upper and lower mattress bodies;

[0038] FIGS. **11** to **13** are sectional views showing the steps of manufacturing the inflatable article;

[0039] **FIG. 14** is a perspective view showing the first preferred embodiment used with a standard-size bedcover;

[0040] **FIG. 15** is a longitudinally sectional view of the second preferred embodiment of an inflatable article according to this invention;

[0041] **FIG. 16** is a longitudinally sectional view of the third preferred embodiment of an inflatable article according to this invention;

[0042] **FIG. 17** is a longitudinally sectional view of the fourth preferred embodiment of an inflatable article according to this invention; and

[0043] **FIG. 18** is a longitudinally sectional view of the second preferred embodiment of an inflatable article according to this invention.

DETAILED DESCRIPTION OF THE PREFERRED EMBODIMENTS

[0044] Before the present invention is described in greater detail, it should be noted that same reference numerals have been used to denote like elements throughout the specification.

[0045] Referring to **FIG. 5**, the first preferred embodiment of an inflatable article **3** in form of an inflatable mattress according to the present invention is shown to comprise upper and lower mattress bodies **301**,**302** which are of similar dimensions, and which are securely superimposed upon each other. Each of the upper and lower mattress bodies **301**,**302** has a box-like shape, and is formed from a heat-sealable and flexible material, such as PVC material or flocking Sumelon material.

[0046] Referring to **FIG. 6**, the upper mattress body **301** includes first upper and lower sheets **31**,**32** formed from a heat-sealable and flexible material, and a first interconnecting strip **33** formed from a heat-sealable and flexible material and having opposite upper and lower strip ends **332**,**331** that are connected to peripheries **311**,**321** of the first upper and lower sheets **31**,**32**, respectively, to form an upper air chamber. Preferably, a plurality of first bracing strips **34** and a first bracing interconnecting strip **35**, which are formed from a heat-sealable and flexible material, are disposed in the upper air chamber to keep the box-like shape of the upper mattress body **301** after inflation. In particular, each of the first bracing strips **34** and the first bracing interconnecting strip **35** has first upper and lower ends **342**,**341**,**352**,**351** which are respectively connected to the first upper and lower sheets **31**,**32**.

[0047] Similarly, referring to **FIG. 7**, the lower mattress body **302** includes second upper and lower sheets **41**,**42** formed from a heat-sealable and flexible material, and a first interconnecting strip **43** formed from a heat-sealable and flexible material and having opposite upper and lower strip ends **432**,**431** that are connected to peripheries **411**,**421** of the second upper and lower sheets **41**,**42**, respectively, to

form a lower air chamber. Preferably, a plurality of second bracing strips **44** and a second bracing interconnecting strip **45**, which are formed from a heat-sealable and flexible material, are disposed in the lower air chamber to keep the box-like shape of the lower mattress body **302** after inflation. In particular, each of the second bracing strips **44** and the second bracing inteconnecting strip **45** has second upper and lower ends **442,441,452,451** which are respectively connected to the second upper and lower sheets **41,42**.

[**0048**] Referring to FIGS. **8** to **10**, a preferred embodiment of a process for manufacturing the aforesaid inflatable article is shown to include the step of providing a first lower sheet **32**, a plurality of first bracing strips **34** and a first bracing interconnecting strip **35**. The first lower sheet **32** includes a first central area, a first peripheral area surrounding the first central area, and a first juncture joining the first central and peripheral areas. Each of the first bracing strips **34** and the first bracing interconnecting strip **35** has first upper and lower ends **342,341,352,351**.

[**0049**] The first lower ends **341** of the first bracing strips **34** are connected to the first central area of the first lower sheet **32** by heat-sealing such that the first lower ends **341** are displaced from one another in the first central area, as shown in **FIG. 8**. In addition, the first lower end **351** of the first bracing interconnecting strip **35** is connected to the first central area of the first lower sheet **32** by heat-sealing such that the first bracing interconnecting strip **35** surrounds the first bracing strips **34**, as shown in **FIG. 9**.

[**0050**] Thereafter, a third central area of a first upper sheet **31** is connected to the first upper ends **342,352** of the first bracing strips **34** and the first bracing interconnecting strip **35** by heat-sealing to form an upper unit **36**. As such, once the first central area of the first lower sheet **32** and the third central area of the first upper sheet **31** are pulled away from each other, a plurality of upper air chambers are formed between the first upper and lower sheets **31,32** due to the arrangement of the first bracing strips **34** and the first bracing interconnecting strip **35**, as shown in **FIG. 10**.

[**0051**] The process further includes the step of providing a second lower sheet **42**, a plurality of second bracing strips **44** and a second bracing interconnecting strip **45**. The second lower sheet **42** includes a fourth central area, a fourth peripheral area surrounding the fourth central area, and a fourth juncture joining the fourth central and peripheral areas. Each of the second bracing strips **44** and the second bracing interconnecting strip **45** includes second upper and lower ends **442,441,452,451**.

[**0052**] The second lower ends **441** of the second bracing strips **44** are connected to the fourth central area of the second lower sheet **42** by heat-sealing such that the second lower ends **441** are displaced from one another in the fourth central area, as shown in **FIG. 8**. Moreover, the second lower end **451** of the second bracing interconnecting strip **45** is connected to the fourth central area of the second lower sheet **42** by heat-sealing such that the second bracing interconnecting strip **45** surrounds the second bracing strips **44**, as shown in **FIG. 9**.

[**0053**] Thereafter, a second central area of a second upper sheet **41** is connected to the second upper ends **442,452** of the second bracing strips **44** and the second bracing interconnecting strip **45** by heat-sealing to form a lower unit **46**. As such, once the fourth central area of the second lower sheet **42** and the fourth central area of the second upper sheet **41** are pulled away from each other, a plurality of lower air chambers are formed between the second upper and lower sheets **41,42** due to the arrangement of the second bracing strips **44** and the second bracing interconnecting strip **45**, as shown in **FIG. 10**.

[**0054**] Referring to FIGS. **11** to **13**, after the upper and lower units **36,46** are formed, the first juncture of the first lower sheet **32** and the second juncture of the second upper sheet **41** are united at a joint line **51** by heat-sealing, as shown in **FIG. 11**.

[**0055**] Thereafter, the first peripheral area of the first lower sheet **32** and a third peripheral area of the first upper sheet **31**, which surrounds the third central area, are interconnected by using a first interconnecting strip **33**. The first interconnecting strip **33** has a valve **37** (see **FIG. 5**) disposed thereon, and includes lower and upper strip ends **331,332** which are respectively connected to a periphery **321** of the first peripheral area of the first lower sheet **32** and a periphery **311** of the third peripheral area of the first upper sheet **31** by heat-sealing such that the first interconnecting strip **33** encloses and conceals the upper air chambers, as shown in **FIG. 12**, thereby forming an upper mattress body **301**.

[**0056**] At the same time, the second peripheral area of the second upper sheet **41** and a fourth peripheral area of the second lower sheet **42**, which surrounds the fourth central area, are interconnected by using a second interconnecting strip **43**. The second interconnecting strip **43** has a valve **37** (see **FIG. 5**) disposed thereon, and includes upper and lower strip ends **432,431** which are respectively connected to a periphery **411** of the second peripheral area of the second upper sheet **41** and a periphery **421** of the fourth peripheral area of the second lower sheet **42** such that the second interconnecting strip **43** encloses and conceals the lower air chambers, as shown in **FIG. 13**, thereby forming a lower mattress body **302**.

[**0057**] As shown in **FIGS. 5 and 13**, since the first lower sheet **32** and the second upper sheet **41** are interconnected at the first and second junctures, i.e. at the joint line **51**, a surrounding clearance **52** is formed between the upper and lower mattress bodies **301,302** around the joint line **51**. Thus, as shown in **FIG. 14**, when a bedcover **2** of a standard size is used to cover the upper mattress body **301**, side edges of the bedcover **2** can be retained in the surrounding clearance **52**.

[**0058**] It is noted that during the step of uniting the first juncture and the second juncture, as shown in **FIG. 11**, since the first upper sheet **31** and the second lower sheet **42** are flexible, the heat-sealing operation is easy to conduct.

[**0059**] It is further noted that the aforesaid steps may not be implemented in the sequence described above. For example, the step of connecting the first upper sheet **31** to the first bracing strip **34** and the first bracing interconnecting strip **35**, and the step of connecting the second upper sheet **41** to the second bracing strips **44** and the second bracing interconnecting strip **45** can be implemented after the step of uniting the first juncture and the second juncture. In addition, the step of uniting the first juncture and the second juncture can be implemented before the first and second

bracing strips **34**,**44** and the first and second bracing interconnecting strips **35**,**45** are respectively connected to the first lower sheet **32** and the second upper sheet **41**. Moreover, the second upper sheet **41** may be connected to the second bracing strips **44** and the second bracing interconnecting strip **45** before the second lower sheet **42** is connected to the second bracing strips **44** and the second bracing interconnecting strip **45**.

[**0060**] In this embodiment, the heat-sealing process is a high frequency welding process.

[**0061**] Furthermore, the first and second bracing strips **34**,**44** are not limited to have the configuration shown in **FIGS. 6 and 7**. Various forms of the first and second bracing strips can be employed as shown in FIGS. **15** to **18**.

[**0062**] In **FIG. 15**, each of the first and second bracing strips **34***a*,**44***a* has a wavy shape. In **FIG. 16**, each of the first and second bracing strips **34***b*,**44***b* includes an elongate band **344**,**444** and a plurality of arcuate pieces **346**,**446** which are alternately arranged on both sides of the elongate band **344**,**444** and which are displaced from one another in a lengthwise direction of the elongate band **344**,**444**. In **FIG. 17**, each of the first and second bracing strips **34***c*,**44***c* includes an elongate band **345**,**445** and a plurality of triangular pieces **347**,**447** which are arranged on both sides of the elongate band **345**,**445**. In **FIG. 18**, each of the first and second bracing strips **34***d*,**44***d* includes a plurality of heart-shaped pieces **348** which are arranged in a row, and which are spaced apart from one another by a short piece **349**.

[**0063**] While the present invention has been described in connection with what is considered the most practical and preferred embodiments, it is understood that this invention is not limited to the disclosed embodiments but is intended to cover various arrangements included within the spirit and scope of the broadest interpretations and equivalent arrangements.

I claim:

1. A process for manufacturing an inflatable article, comprising the steps of:

i) providing a first lower sheet that is formed from a heat-sealable and flexible material, said first lower sheet including a first central area, a first peripheral area surrounding said first central area, and a first juncture joining said first central and peripheral areas;

ii) providing a plurality of first bracing strips that are formed from a heat-sealable and flexible material, each of said first bracing strips having first upper and lower ends opposite to each other;

iii) connecting said first lower ends to said first central area by heat-sealing such that said first lower ends are displaced from one another in said first central area;

iv) providing a second upper sheet that is formed from a heat-sealable and flexible material, said second upper sheet including a second central area, a second peripheral area surrounding said second central area, and a second juncture joining said second central and peripheral areas;

v) providing a plurality of second bracing strips that are formed from a heat-sealable and flexible material, each of said second bracing strips having second upper and lower ends opposite to each other;

vi) connecting said second upper ends to said second central area by heat-sealing such that said second upper ends are displaced from one another in said second central area;

vii) uniting said first juncture and said second juncture by heat-sealing;

viii) connecting a third central area of a first upper sheet and a fourth central area of a second lower sheet respectively to said first upper ends of said first bracing strips and said second lower ends of said second bracing strips, respectively, by heat-sealing, such that once said first central area and said third central area are pulled away from each other, a plurality of upper air chambers are formed between said first upper and lower sheets by said first bracing strips, and such that once said second central area and said fourth central area are pulled away from each other, a plurality of lower air chambers are formed between said second upper and lower sheets by said second bracing strips; and

ix) using a first interconnecting strip that is formed from a heat-sealable and flexible material to interconnect, by heat sealing, said first peripheral area of said first lower sheet and a third peripheral area of said first upper sheet which surrounds said third central area such that said first interconnecting strip encloses and conceals said upper air chambers; and

x) using a second interconnecting strip that is formed from a heat-sealable and flexible material to interconnect, by heat sealing, said second peripheral area of said second upper sheet and a fourth peripheral area of said second lower sheet which surrounds said second central area such that said second interconnecting strip encloses and conceals said lower air chambers.

2. The process for manufacturing an inflatable article according to claim 1, wherein step viii) is implemented after step vi) and before step vii).

3. The process for manufacturing an inflatable article according to claim 1, wherein step viii) includes the sub-steps of:

viii(a) heat-sealing said third central area to said first upper ends of said first bracing strips; and

viii (b) heat-sealing said fourth central area to said second lower ends of said second bracing strips,

and wherein sub-step viii(a) is implemented after step iii) and before step iv), and sub-step viii(b) is implemented after step vi) and before step vii).

4. An inflatable article manufactured by the process of claim 1.

5. The inflatable article according to claim 4, comprising upper and lower mattress bodies which are of similar dimensions, and which are superimposed upon each other.

6. A process for manufacturing an inflatable article comprising the steps of:

i) providing a first lower sheet that is formed from a heat-sealable and flexible material, said first lower sheet including a first central area, a first peripheral area

surrounding said first central area, and a first juncture joining said first central and peripheral areas;

ii) providing a second upper sheet that is formed from a heat-sealable and flexible material, said second upper sheet including a second central area, a second peripheral area surrounding said second central area, and a second juncture joining said second central and peripheral areas;

iii) uniting said first juncture and said second juncture by heat-sealing;

iv) providing a first interconnecting strip that is formed from a heat-sealable and flexible material and that has first upper and lower strip ends opposite to each other;

v) connecting said first lower strip end of said first interconnecting strip to said first peripheral area of said first lower sheet by heat-sealing such that said first lower strip end surrounds said first central area;

vi) providing a second interconnecting strip that is formed from a heat-sealable and flexible material and that has second upper and lower strip ends opposite to each other;

vii) connecting said second upper strip end of said second interconnecting strip to said second peripheral area of said second upper sheet by heat-sealing such that said second upper strip end surrounds said second central area; and

viii) connecting a third peripheral area of a first upper sheet and a fourth peripheral area of a second lower sheet to said first upper strip end of said first interconnecting strip and said second lower strip end of said second interconnecting strip, respectively, by heat sealing so as to confine upper and lower air chambers, respectively.

7. The process for manufacturing an inflatable article according to claim 6, wherein steps iii) to vii) are not implemented in sequence.

* * * * *