US 20070277324A1

(19) United States

(12) Patent Application Publication

(10) Pub. No.: US 2007/0277324 A1

(43) Pub. Date: Dec. 6, 2007

Liu

(54) BEAM CONSTRUCTION OF AIR MATTRESS

(75) Inventor: **Feng Liu**, Shanghai (CN)

Correspondence Address:
FINNEGAN, HENDERSON, FARABOW, GARRETT & DUNNER
LLP
901 NEW YORK AVENUE, NW
WASHINGTON, DC 20001-4413

(73) Assignee: **Bestway Inflatables & Material Corp.**

(21) Appl. No.: **11/789,211**

(22) Filed: **Apr. 23, 2007**

(30) **Foreign Application Priority Data**

Jun. 2, 2006 (CN) 200620042365.1

Publication Classification

(51) **Int. Cl.**
A47C 27/08 (2006.01)

(52) **U.S. Cl.** **5/706**

(57) **ABSTRACT**

The beam construction of an air mattress includes a top sheet, a bottom sheet, and a periphery sheet. Beams are used to connect the top sheet and the bottom sheet. It is further characterized by both ends of the beam having at least one end that has two extended side-parts, with the surface of the extended side-parts connecting with the top sheet or the bottom sheet. The cross-section of the beam may a substantially "I" shape, a substantially "T" shape, a substantially "X" shape, or a substantially "Y" shape. The advantage of this present utility model is that it has created a connecting area between the beam and the top sheet and the bottom sheet, thus reducing the pulling force at the seam and ensuring the durability of the air mattress.

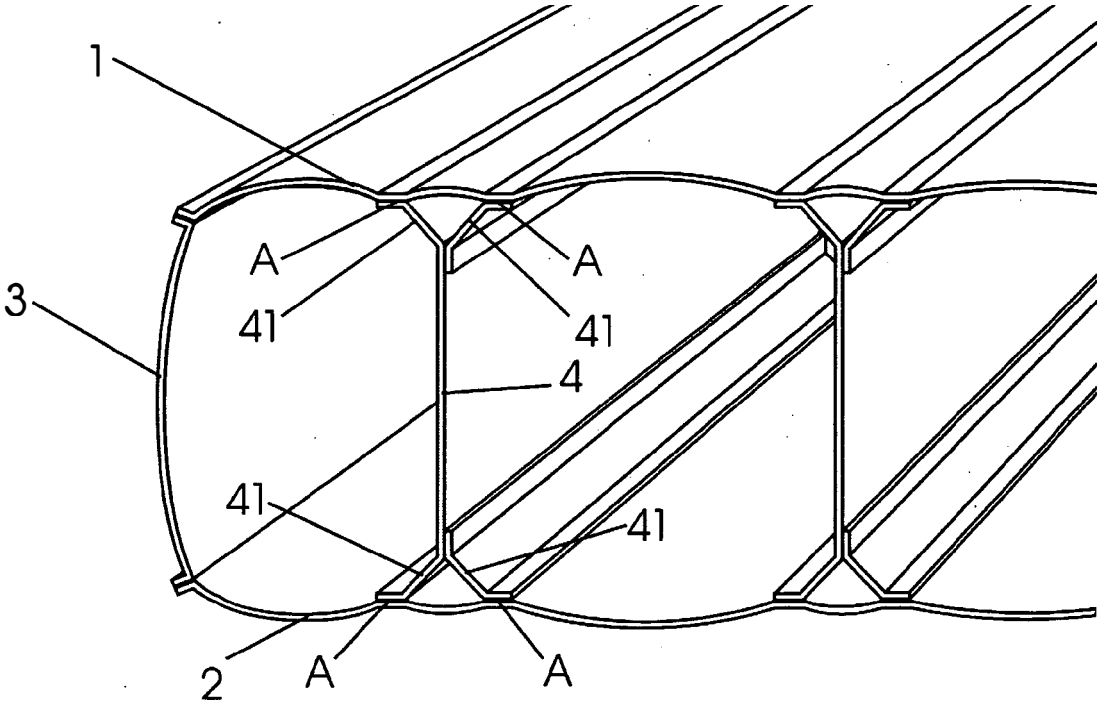

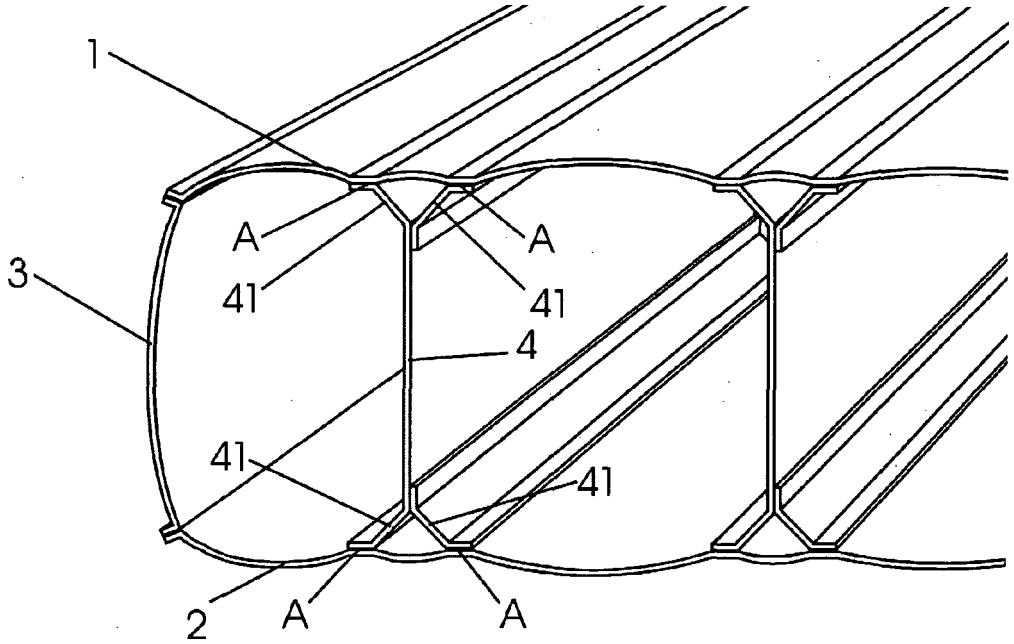

FIG. 1

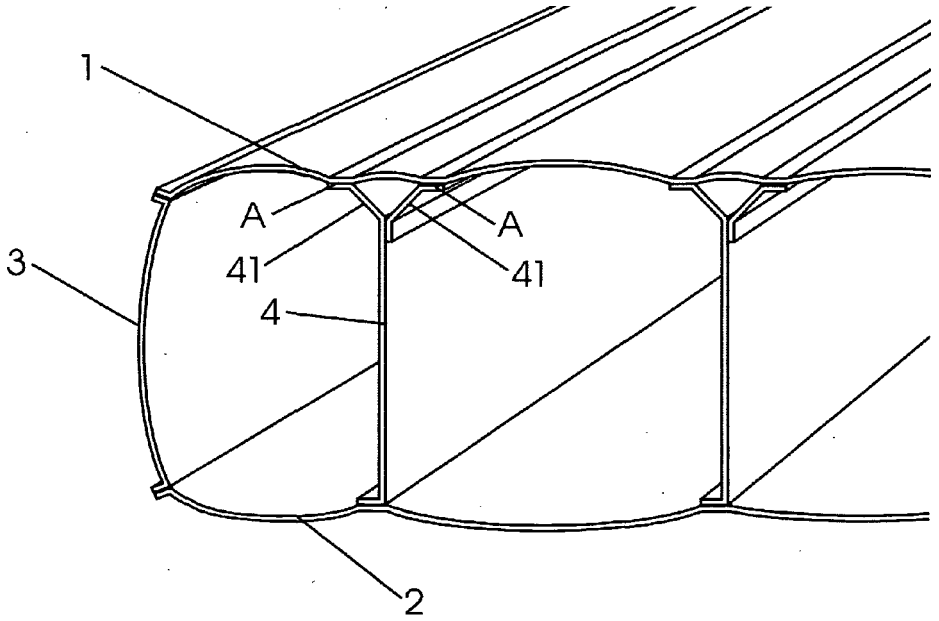

FIG. 2

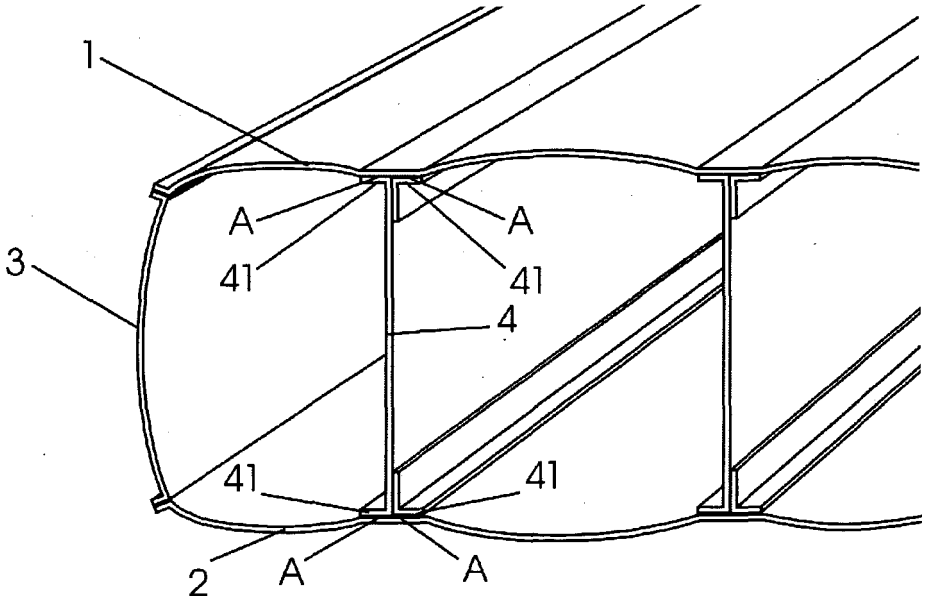

FIG. 3

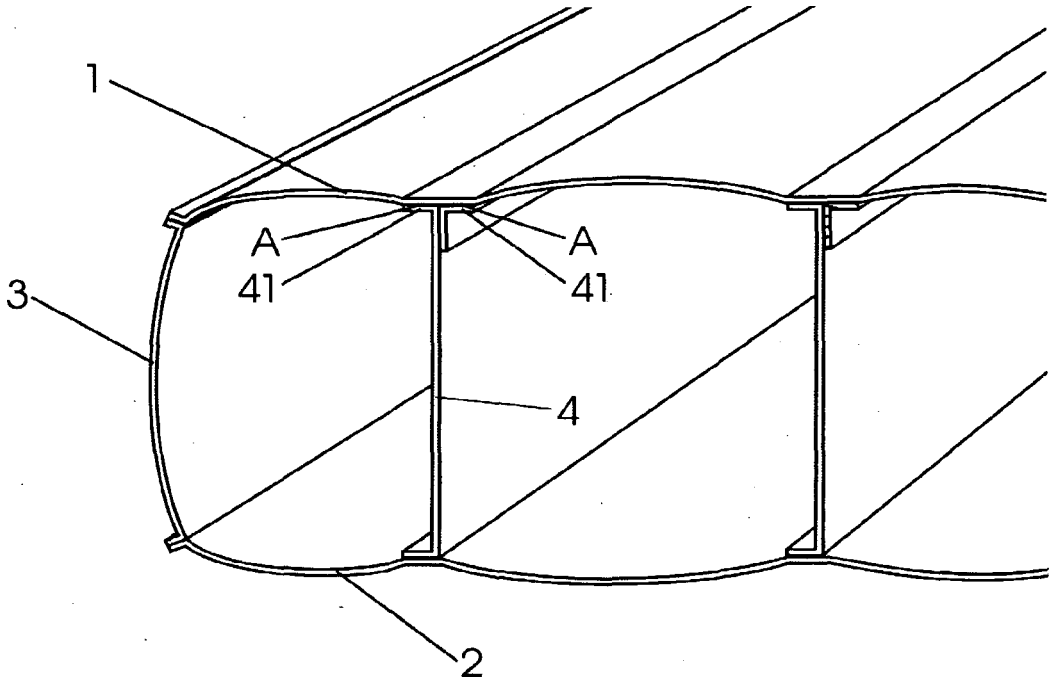

FIG. 4

BEAM CONSTRUCTION OF AIR MATTRESS

FIELD OF THE INVENTION

[0001] The present utility model relates to one kind of air mattresses, and particularly to the beam construction of air mattresses.

BACKGROUND OF THE INVENTION

[0002] At present, air mattresses are becoming more and more popular in the market, because they have the advantages of being easily carried and conveniently stored, in addition to being comfortable. People not only use them as spare beds at home, but also for camping and for leisure. The traditional air mattress generally uses an I-shaped or an S-shaped beam, where both ends of the beam may connect with a top sheet and a bottom sheet, respectively. Generally, the beam's section shape is in the form of a "]" or a "Z". A vertical direction pulling force is created against the top sheet and the bottom sheet after inflation, with more force being exerted at the seam where the beams and the top sheet or the bottom sheet connect. The place where the beams and the top sheet or the bottom sheet connect may easily come apart or be torn apart, especially when the interior air pressure value in the air mattress is high, and damage may occur when stronger exterior forces are exerted, which causes a sudden increase in the interior air pressure value. In order to resolve the problems mentioned above, measures have been taken to add extra beams or use thicker material to enhance the strength of the top sheet and the bottom sheet. Although the possibility of damage to the air mattress has been reduced using these methods, production costs have increased greatly.

SUMMARY OF THE INVENTION

[0003] The purpose of the present utility model is to provide a beam construction for a kind of air mattress in view of the flaws that exist in the current technology.

[0004] The present utility model mainly comprises a top sheet, a bottom sheet, and a periphery sheet. Beams are used to connect the top sheet and the bottom sheet. The present utility model is characterized by both ends of the beam having at least one end that can extend to two sides, with the surface of the extending part connecting with the top sheet or the bottom sheet separately. The cross-section of the beam may assume the form of an "I," a "J," an "X," or a "Y."

[0005] Compared with the beams of the current and existing technology, the advantage of the present utility model is that it has an added connecting area between the beams and the top sheet and the bottom sheet, thus reducing the pulling force exerted at the seam and ensuring the durability of the air mattress.

BRIEF DESCRIPTION OF THE DRAWINGS

[0006] FIG. **1** illustrates the cross-section of this new beam construction has a substantially "X" shape.

[0007] FIG. **2** illustrates the cross-section of this new beam construction has a substantially "Y" shape.

[0008] FIG. **3** illustrates the cross-section of this new beam construction has a substantially "I" shape.

[0009] FIG. **4** illustrates the cross-section of this new beam construction has a substantially "J" shape.

[0010] The following reference numbers and designations will be used in the figures and the "Description of the Embodiments" to indicate like elements: **1**. top sheet; **2**. bottom sheet; **3**. periphery sheet; **4**. beam; **41**. extending parts; and A. welded joints.

DESCRIPTION OF THE EMBODIMENTS

[0011] As shown in FIG. **1**, a beam **4** has a substantially "X" shape cross-section. The two ends of beam **4** have extending parts **41** that are connected with a top sheet **1** or a bottom sheet **2**, respectively, by adoption of high-frequency welding. After inflation, beam **4** of the air mattress exerts pulling forces against the top sheet **1** and the bottom sheet **2** through both ends of the extending parts **41**. The pulling forces against the top sheet **1** and the bottom sheet **2** are dispersed. Simultaneously, the extending parts **41** connected with both ends of beam **4** protect the welded joints A. The place where beam **4** connects with the top sheet **1** or the bottom sheet **2** will not easily peel off or be torn away when pulling forces are brought from vertical directions, even when the interior air pressure value in the air mattress is high, or when stronger exterior forces are exerted, which causes a sudden increase of interior air pressure value.

[0012] The embodiment shown in FIG. **2** is similar to the embodiment shown in FIG. **1**, except that the cross-section of beam **4** has a substantially "Y" shape. While the beam **4** has only upper ends that can extend to both sides, which connect with the top sheet **1**, this mainly increases the reliability of the seam where beam **4** and the top sheet **1** are connected. The lower end has an extending part **41** that connects with the bottom sheet **2**.

[0013] The embodiment shown in FIG. **3** is similar to the embodiment shown in FIG. **1**, except that the cross-section of beam **4** has a substantially "I" shape. While the beam **4** has upper ends that can extend to both sides, which connect with the top sheet **1**, this mainly increases the reliability of the seam where beam **4** and the top sheet **1** are connected. The lower end has two extending parts **41** that connect with the bottom sheet **2**.

[0014] The embodiment shown in FIG. **4** is similar to the embodiment shown in FIG. **1**, except that the cross-section of beam **4** has a substantial "J" shape. While the beam **4** has only upper ends that can extend to both sides, which connect with the top sheet **1**, this mainly increases the reliability of the seam where beam **4** and the top sheet **1** are connected. The lower end has only one extending part **41** that connects with the bottom sheet **2**.

What is claimed is:

1. An air mattress comprising a top sheet, a bottom sheet, a periphery sheet, and beams connected between the top sheet and the bottom sheet, wherein both ends of each beam have at least one end having two extended side-parts, with the surface of the extended side-part connecting with the top sheet or the bottom sheet, and wherein each beam has a cross-section having a shape selected from a group consisting of a substantially "I" shape, a substantially "J" shape, a substantially "X" shape, or a substantially "Y" shape.

* * * * *