US007406735B2

(12) **United States Patent**
Lin et al.

(10) **Patent No.: US 7,406,735 B2**
(45) **Date of Patent: Aug. 5, 2008**

(54) **AIR-INFLATED MATTRESS**

(75) Inventors: **Hua Hsiang Lin**, Haicang (CN); **Yaw Yuan Hsu**, Haicang (CN); **Lan Lee**, Haicang (CN)

(73) Assignee: **Intex Recreation Corp.**, Long Beach, CA (US)

(*) Notice: Subject to any disclaimer, the term of this patent is extended or adjusted under 35 U.S.C. 154(b) by 9 days.

(21) Appl. No.: **11/449,287**

(22) Filed: **Jun. 8, 2006**

(65) **Prior Publication Data**

US 2007/0283499 A1 Dec. 13, 2007

(51) **Int. Cl.**
A47C 27/08 (2006.01)

(52) **U.S. Cl.** **5/712**; 5/711; 5/706

(58) **Field of Classification Search** 5/712, 5/706, 710, 711, 713, 654, 655.3, 644
See application file for complete search history.

(56) **References Cited**

U.S. PATENT DOCUMENTS

1,625,810 A 4/1927 Krichbaum
1,793,703 A 2/1931 Krichbaum
2,318,492 A 5/1943 Johnson
2,604,641 A 7/1952 Reed
3,705,429 A 12/1972 Nail
4,371,999 A 2/1983 Reid
4,483,030 A 11/1984 Flick et al.
4,547,919 A 10/1985 Wang
4,631,767 A 12/1986 Carr et al.
4,679,264 A 7/1987 Mollura
4,807,313 A 2/1989 Ryder et al.
4,882,800 A 11/1989 Schueler
4,908,895 A 3/1990 Walker
4,999,867 A 3/1991 Tiovio et al.
5,022,109 A 6/1991 Pekar
5,044,030 A 9/1991 Balaton
5,067,189 A 11/1991 Weedling et al.
5,109,560 A 5/1992 Uetake
5,373,595 A 12/1994 Johnson et al.
5,406,661 A 4/1995 Pekar
5,408,711 A 4/1995 McClelland
5,412,822 A 5/1995 Kelly
5,490,295 A 2/1996 Boyd
5,581,828 A 12/1996 Price
5,598,593 A 2/1997 Wolfe
5,642,544 A 7/1997 Munoz
5,740,573 A 4/1998 Boyd
5,890,245 A 4/1999 Klearman et al.
5,906,019 A 5/1999 McCarthy et al.

(Continued)

Primary Examiner—Robert G. Santos
(74) *Attorney, Agent, or Firm*—Lewis Brisbois Bisgaard & Smith LLP; Sanford Astor

(57) **ABSTRACT**

An air-inflated mattress, comprising a top layer, an outer shroud band, a plurality of anchor separators and a bottom layer, wherein said shroud band connects the top and bottom layers together to form an inflatable bladder; further comprising a middle layer below said top layer sealed to the top layer. The mattress may also comprise a middle shroud band and an inner shroud band, a plurality of joint spots welded on the bottom side of the top layer, alternatively arranged with anchor separators and a plurality of joint spots welded between the shrouds and means to pass air between the bladder and a plurality of half-sealed sub-chambers created by the joint welds, which slows the spreading speed of the air to the bladder and the chambers, so that the air mattress is even and level and the supporting strength of the air mattress is greatly improved.

8 Claims, 14 Drawing Sheets

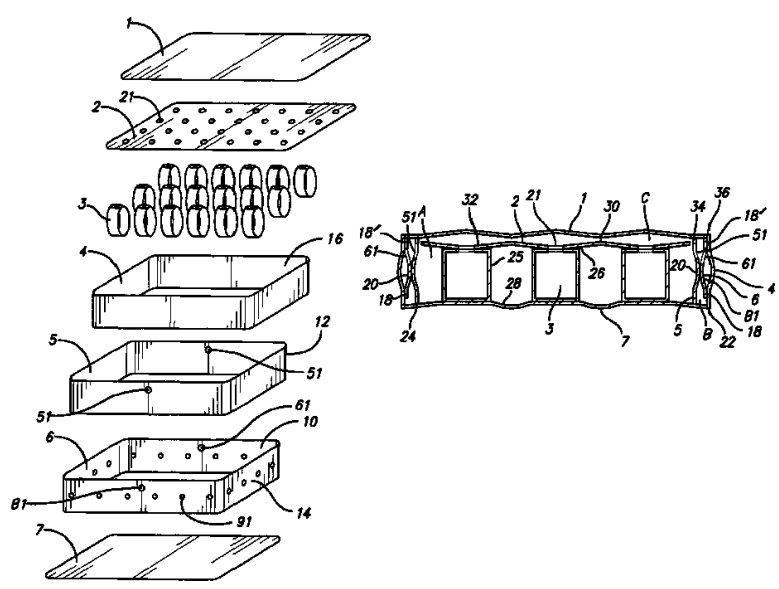

U.S. PATENT DOCUMENTS

5,960,495	A	10/1999	Hsu et al.	
6,016,582	A	1/2000	Larson	
6,073,291	A	6/2000	Davis	
6,161,240	A	12/2000	Huang	
6,332,760	B1 *	12/2001	Chung	417/411
6,568,011	B2	5/2003	Fisher et al.	
6,907,633	B2	6/2005	Paolini et al.	
6,971,134	B2	12/2005	Wu	
7,284,291	B2 *	10/2007	Wang	5/713
2002/0083528	A1 *	7/2002	Fisher et al.	5/706
2004/0283499	*	12/2007	Lin et al.	5/712

* cited by examiner

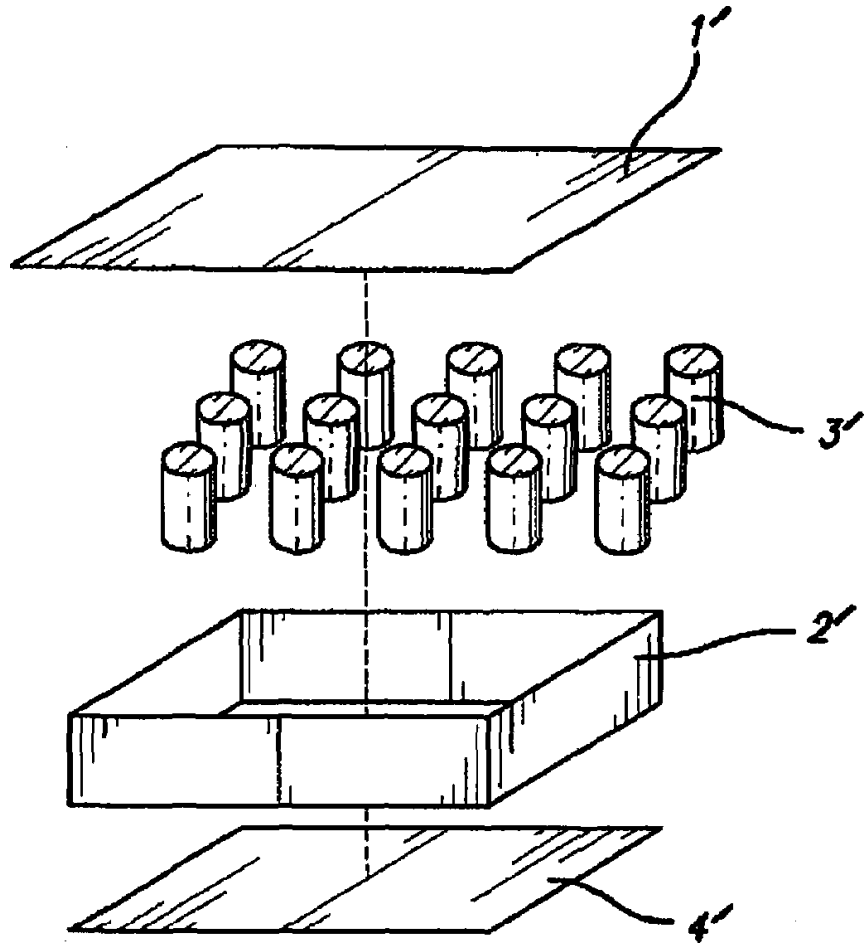

FIG. 1
PRIOR ART

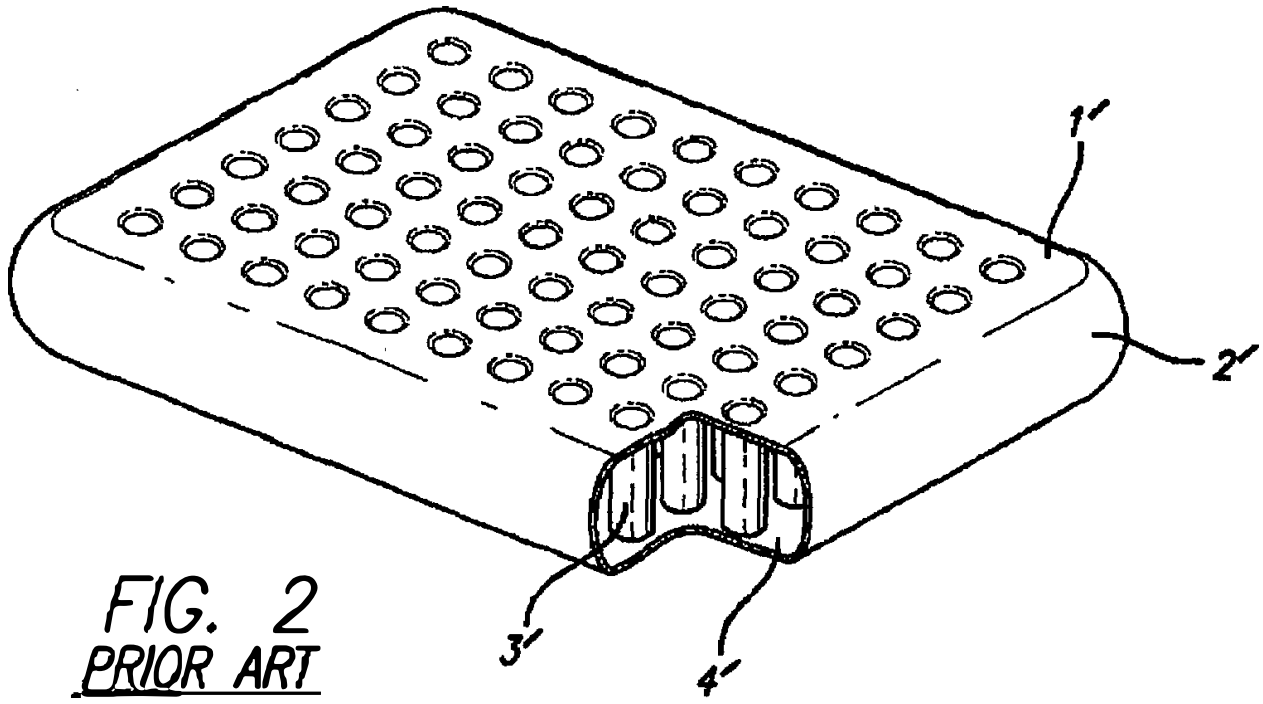

FIG. 2
PRIOR ART

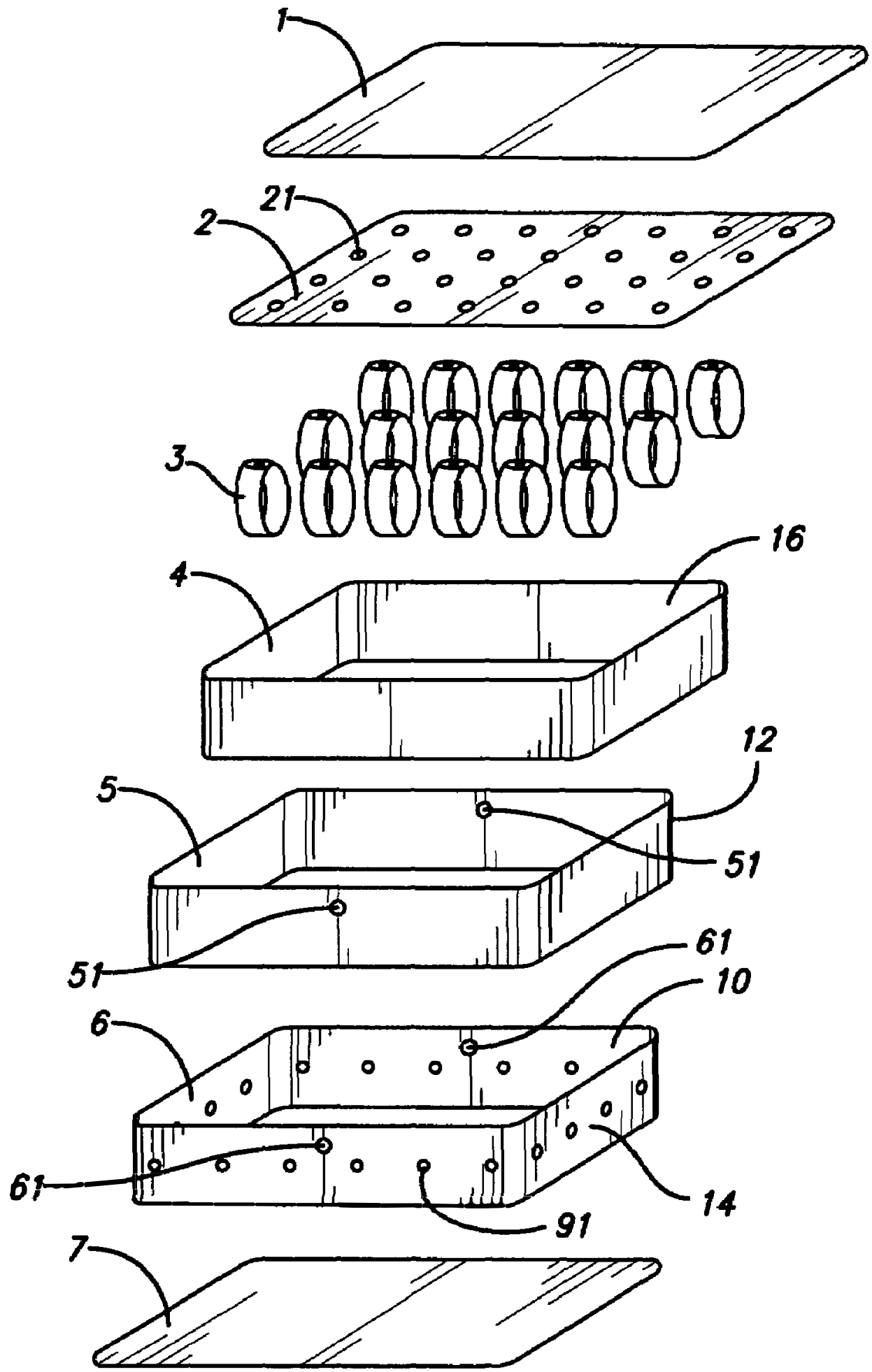

FIG. 3

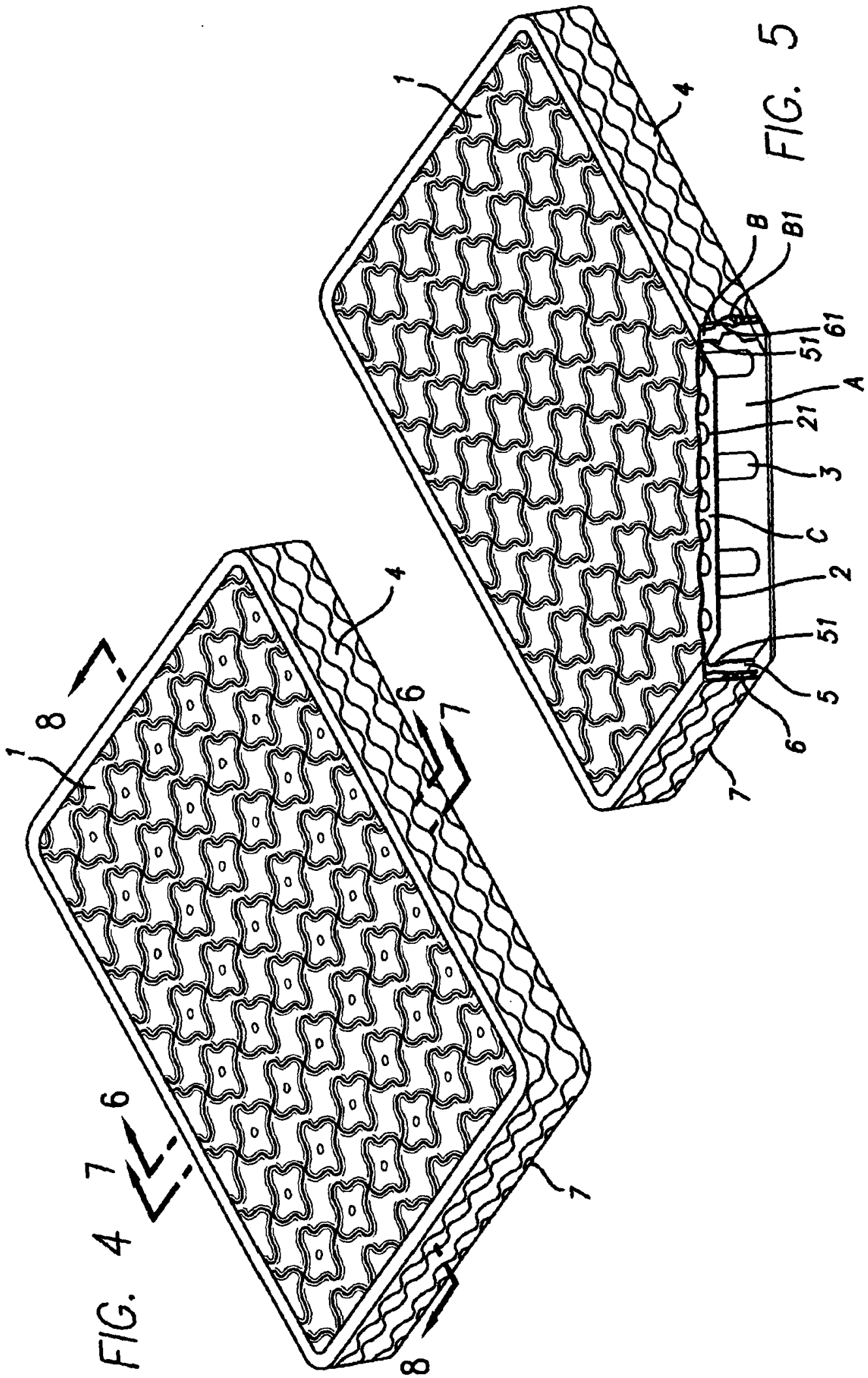

FIG. 5

FIG. 4

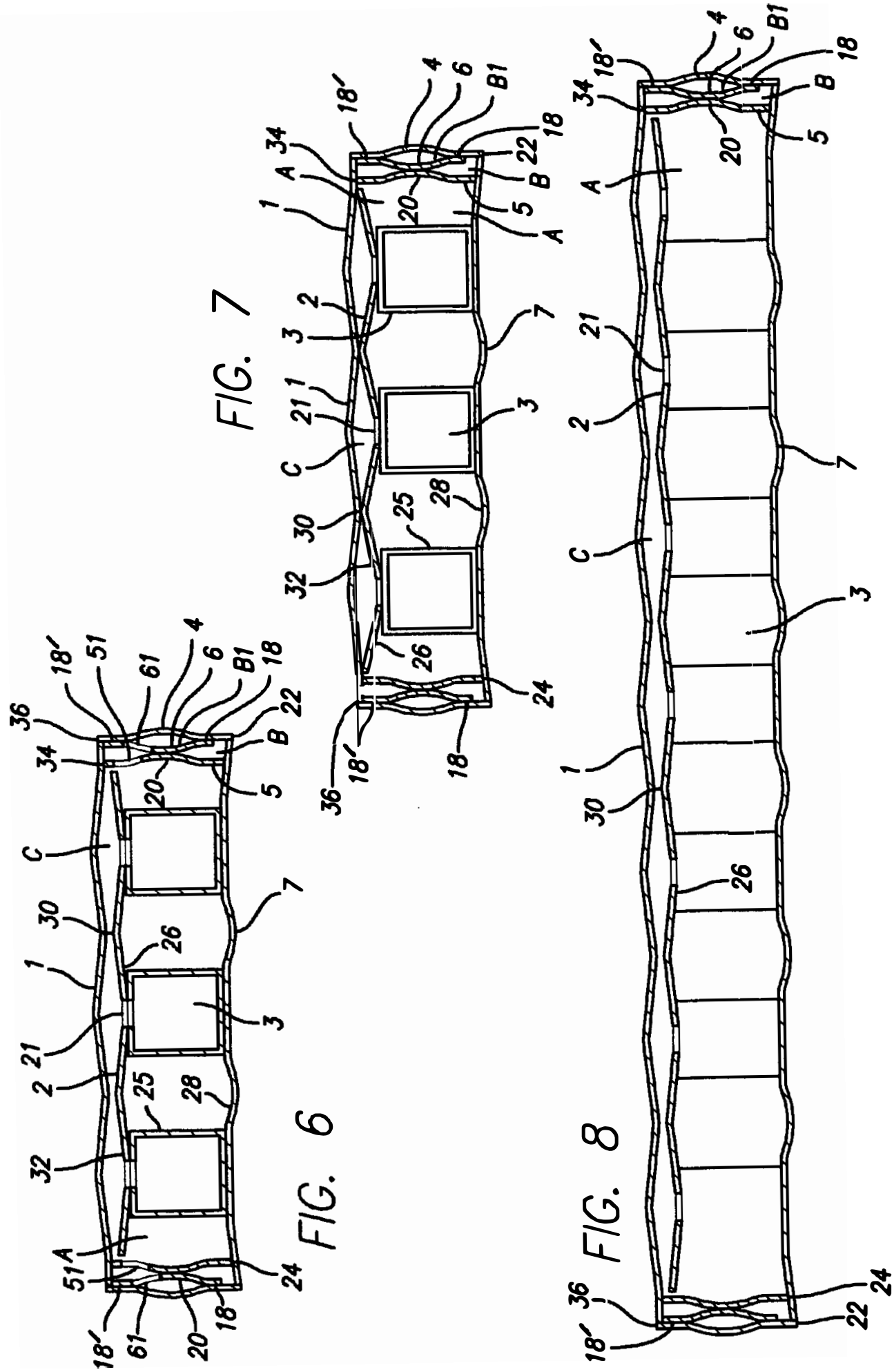
FIG. 6
FIG. 7
FIG. 8

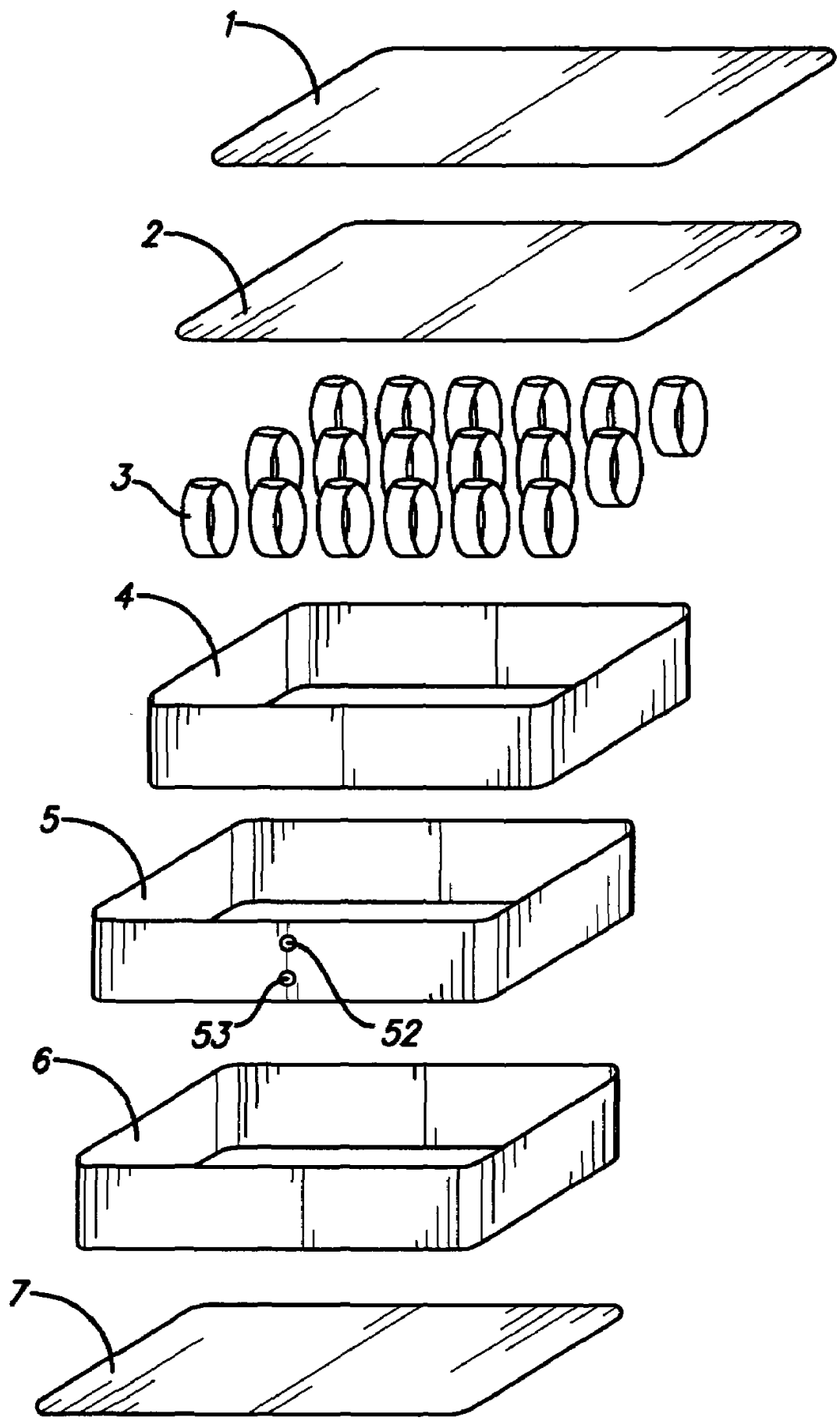

FIG. 9

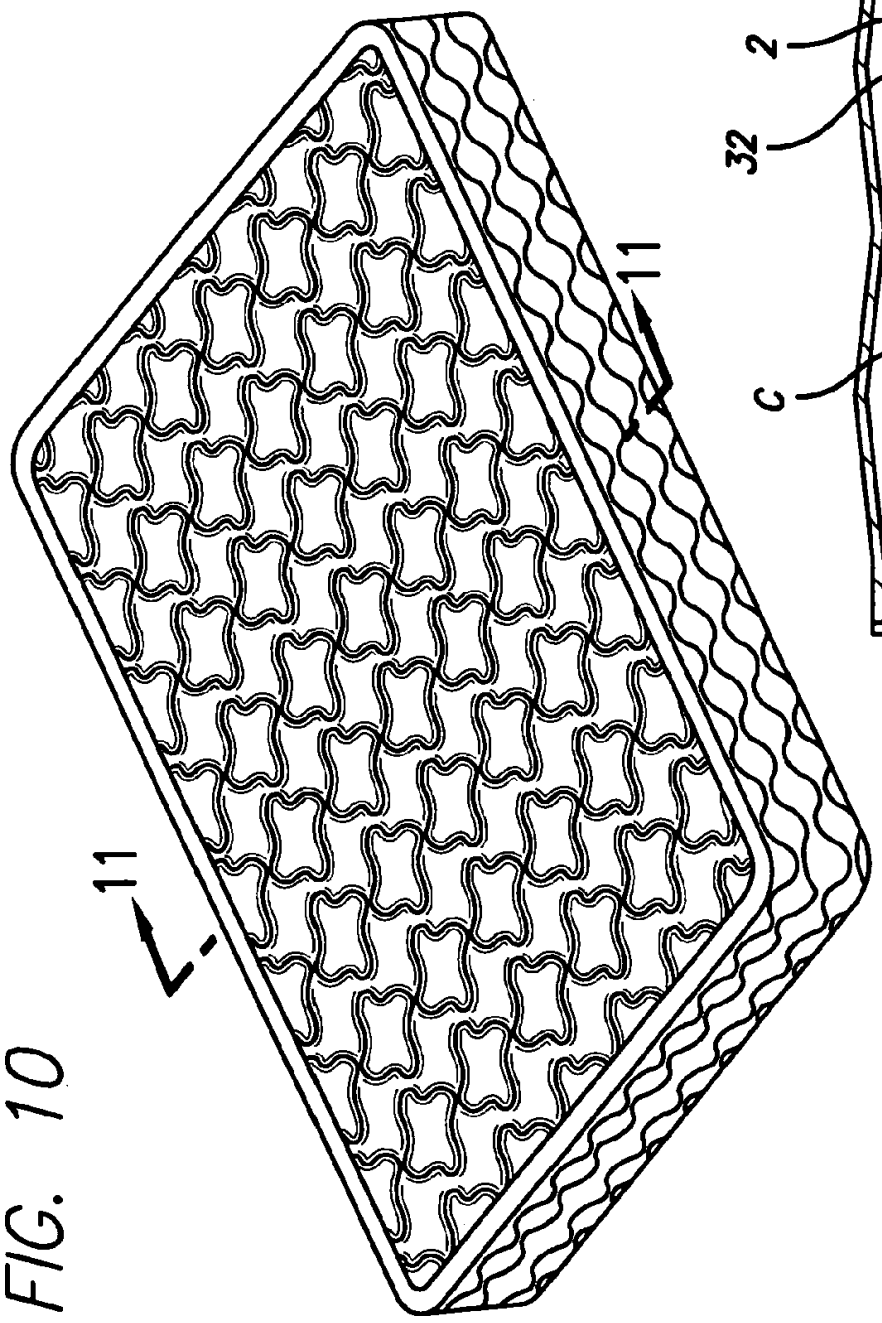

FIG. 10

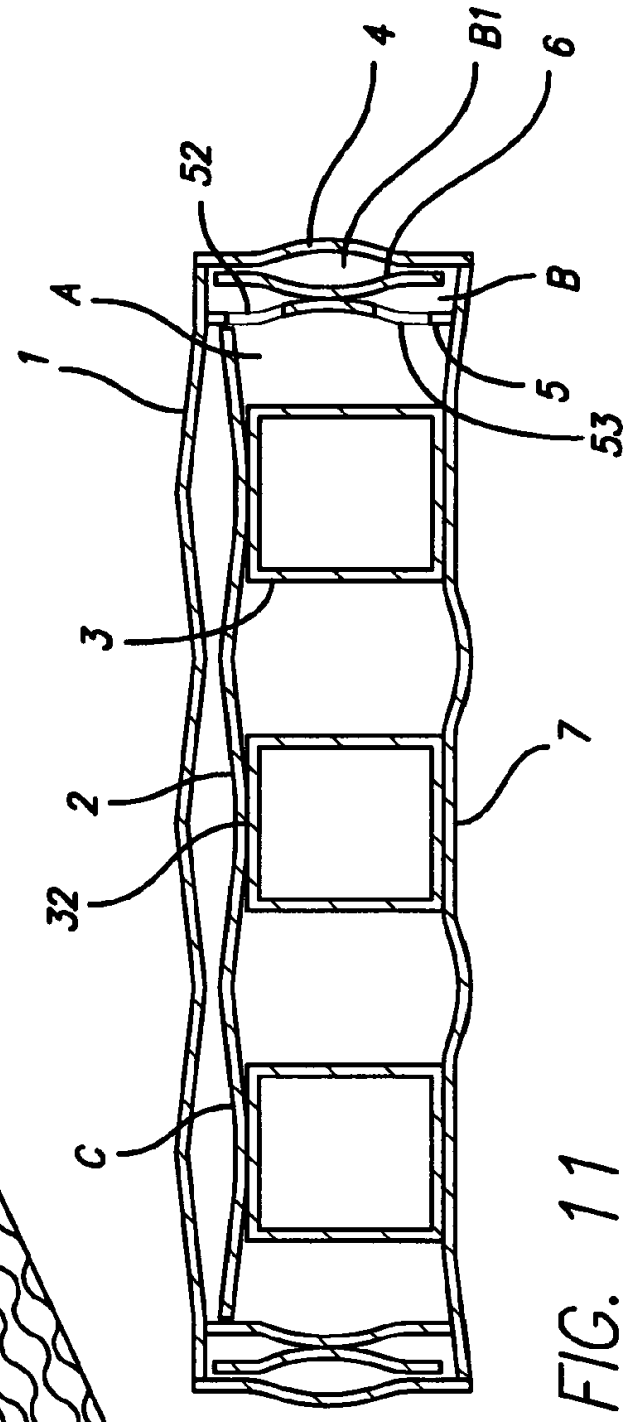

FIG. 11

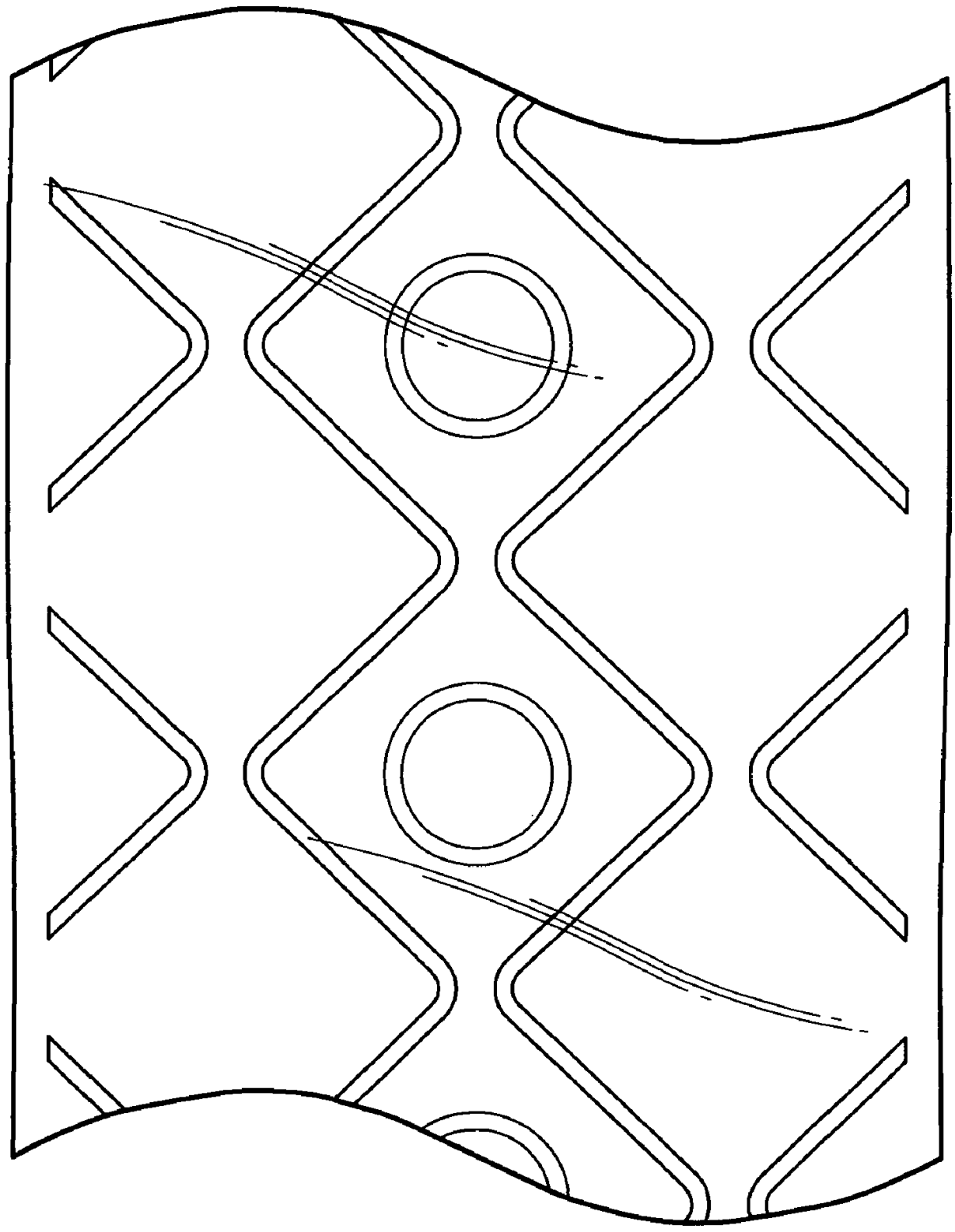

FIG. 11A

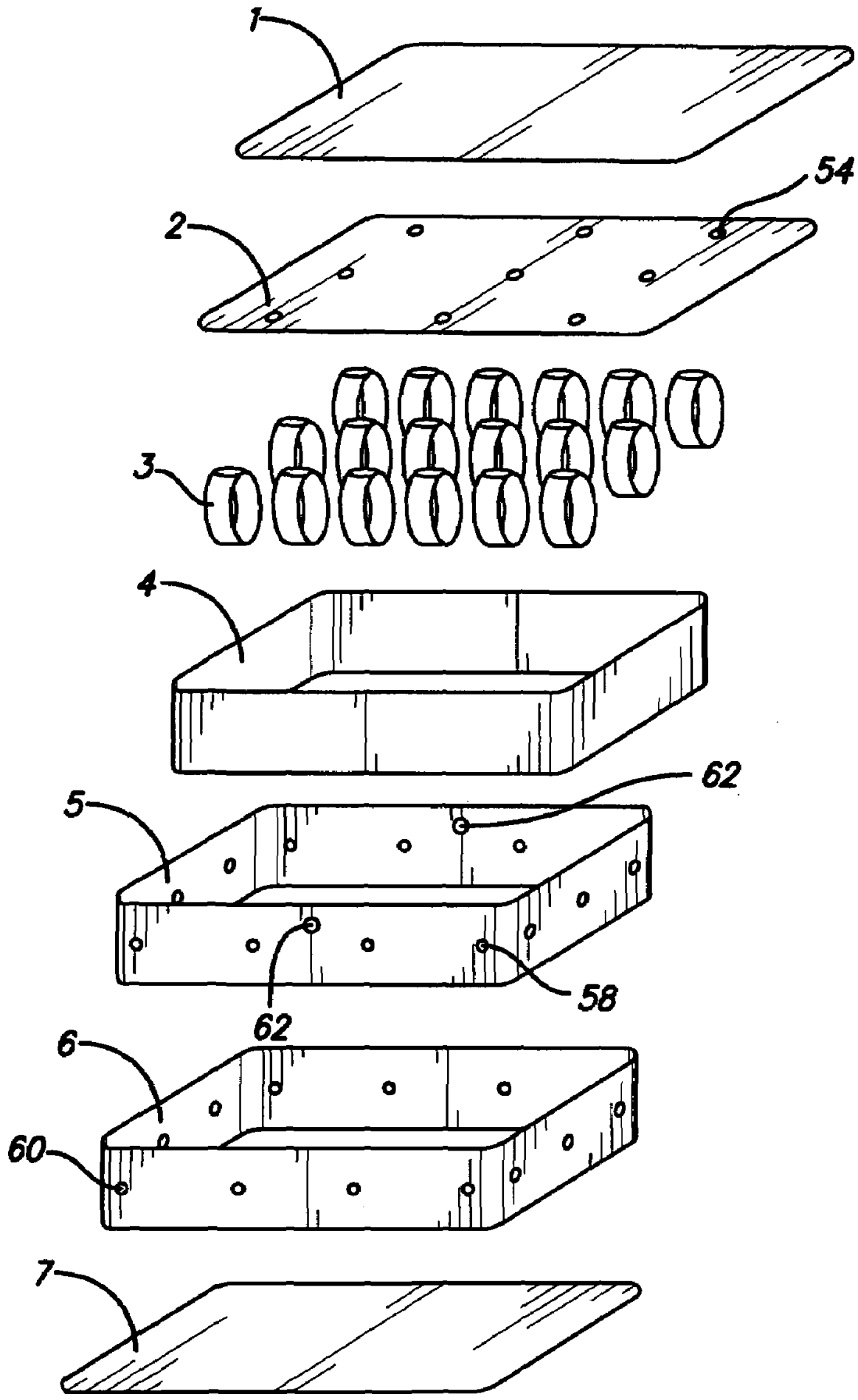

FIG. 12

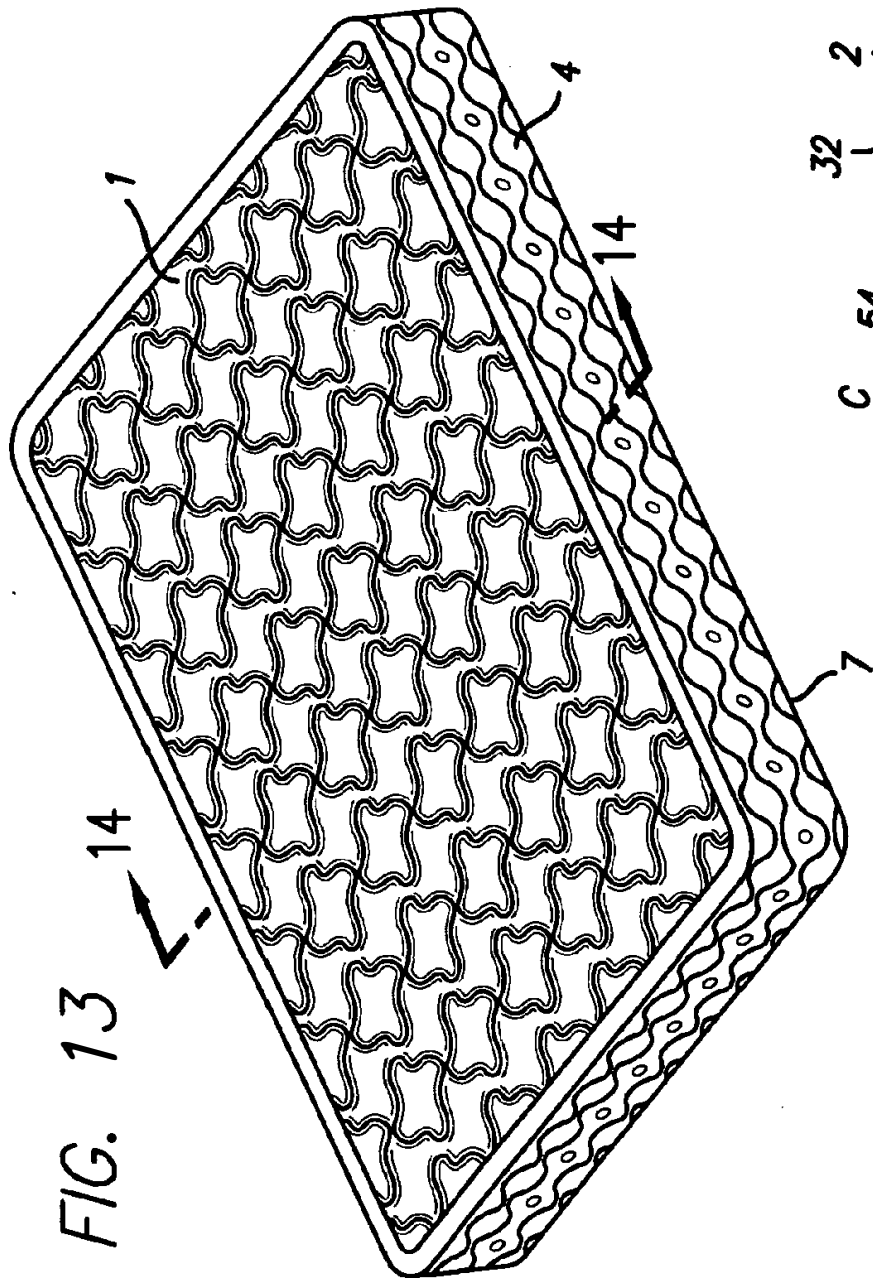

FIG. 13

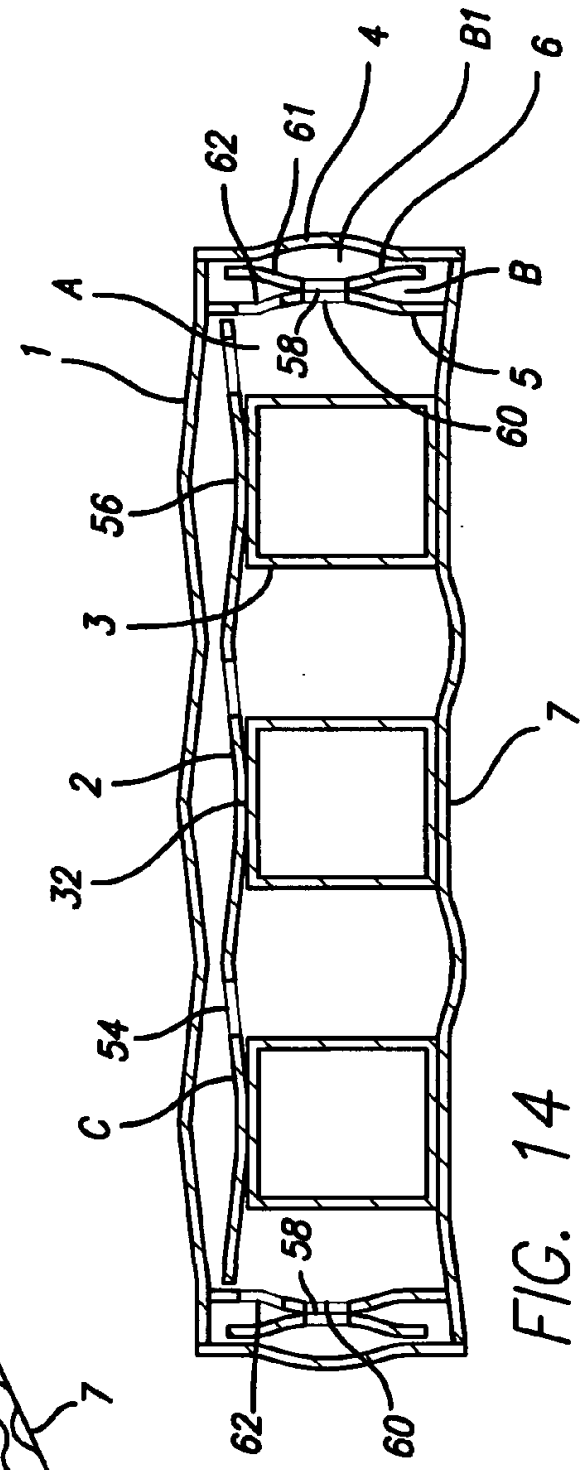

FIG. 14

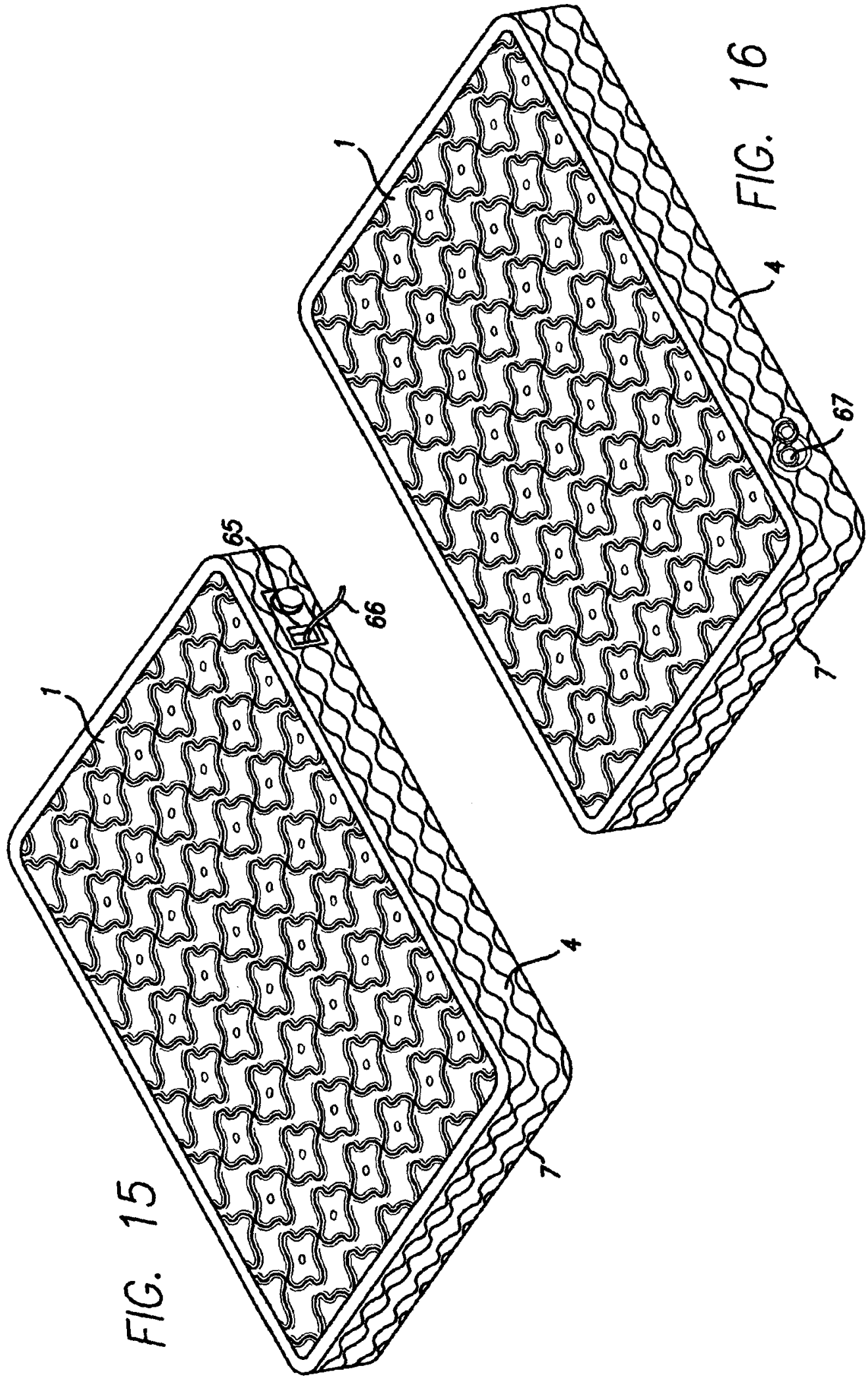

FIG. 16

FIG. 15

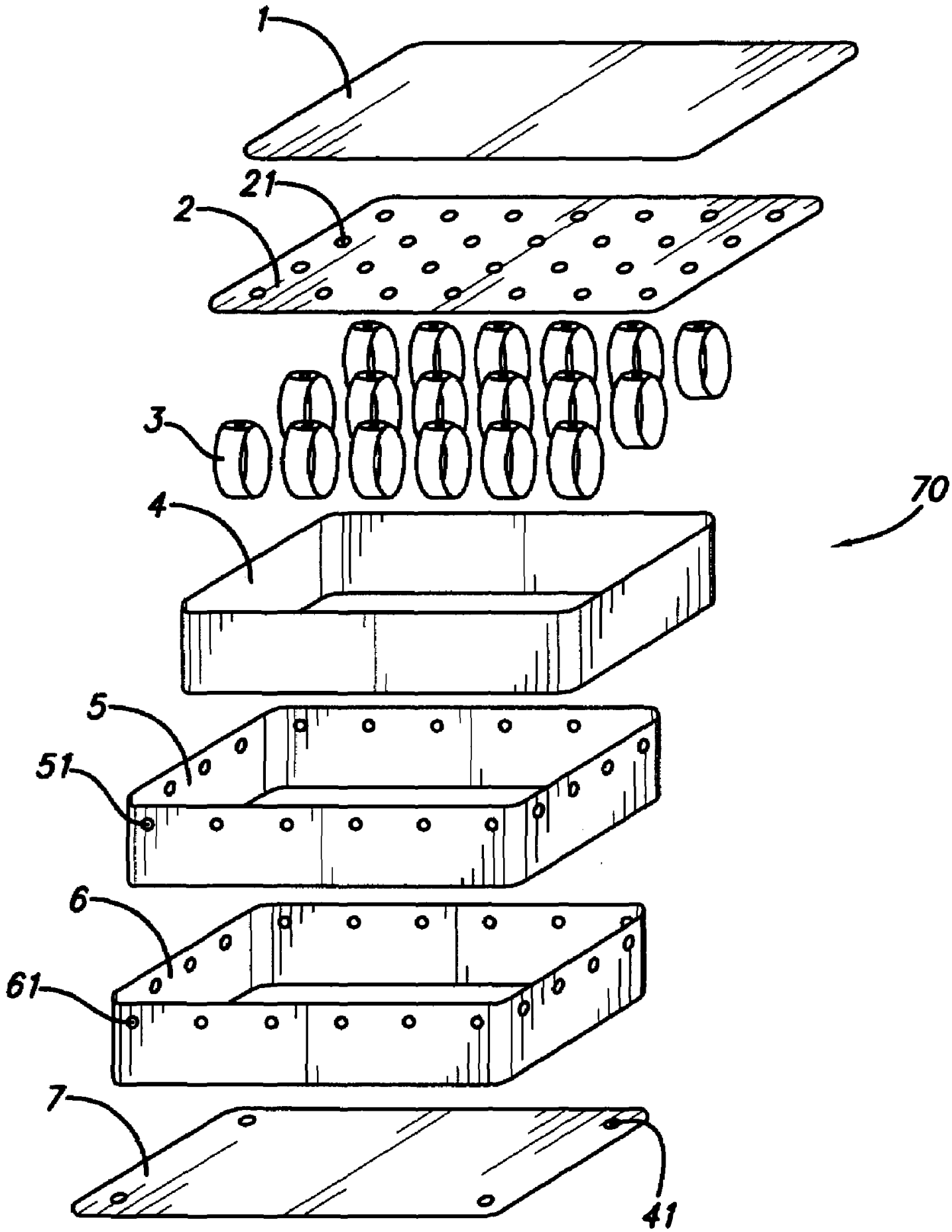

FIG. 17

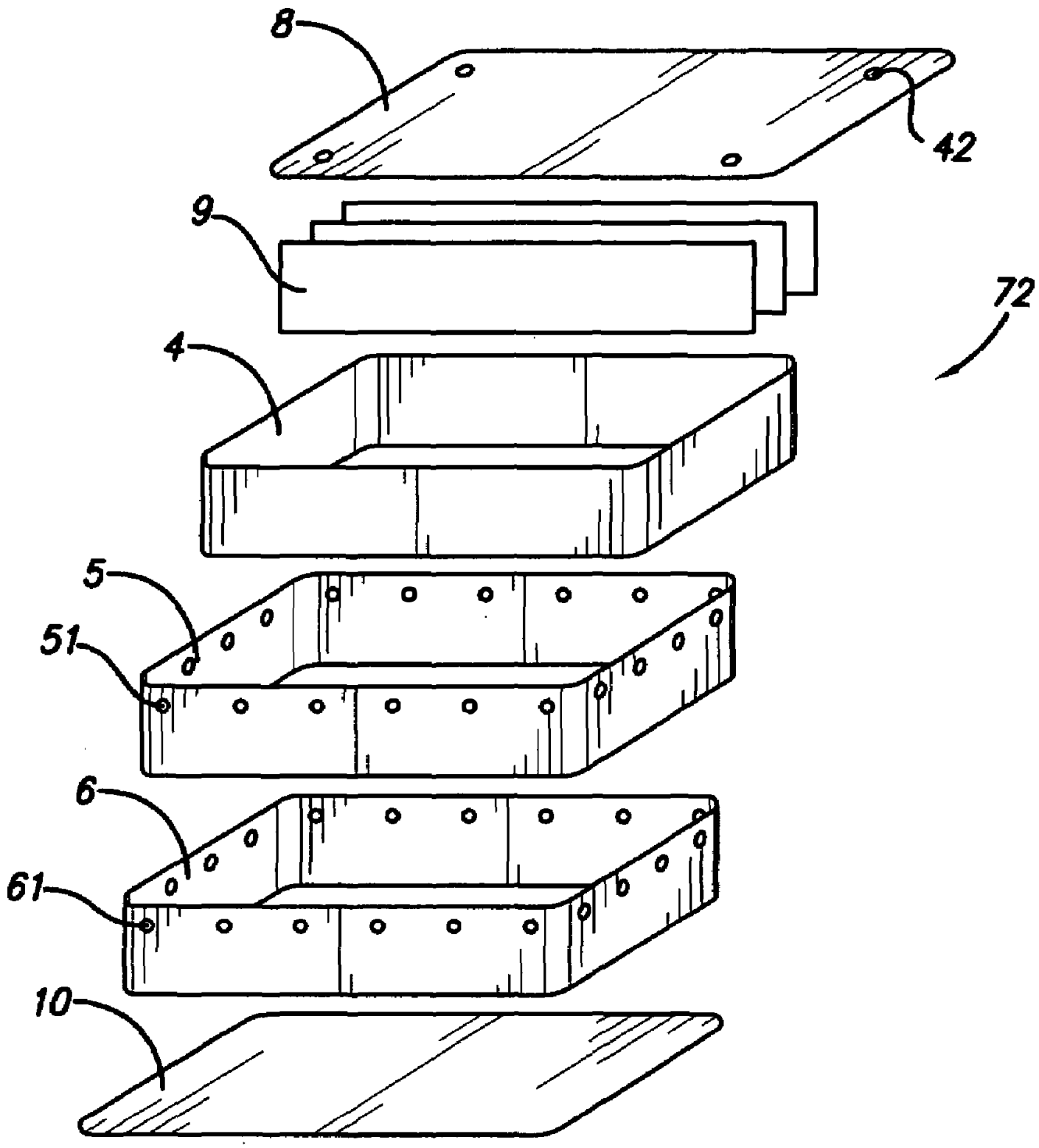

FIG. 18

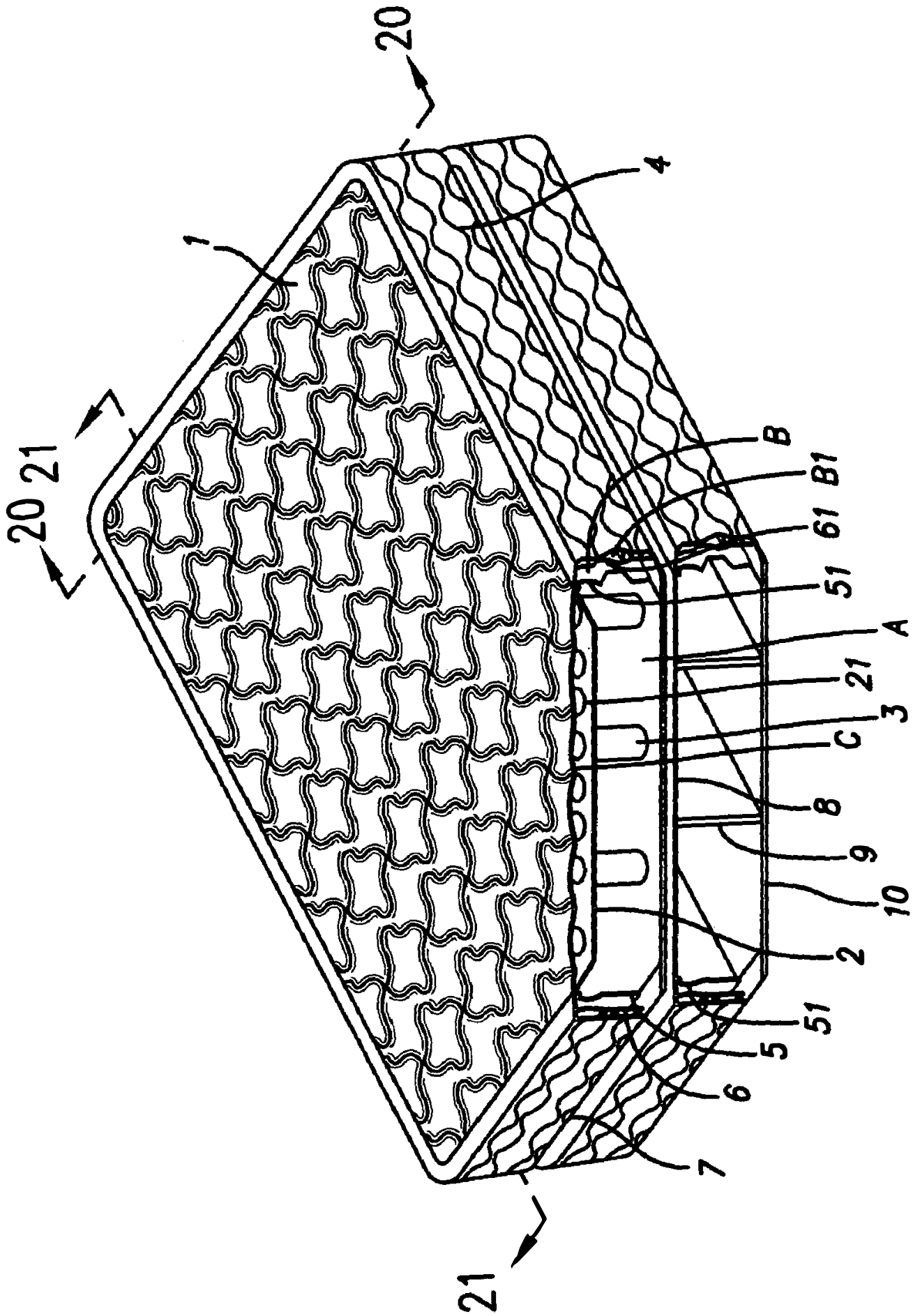

FIG. 19

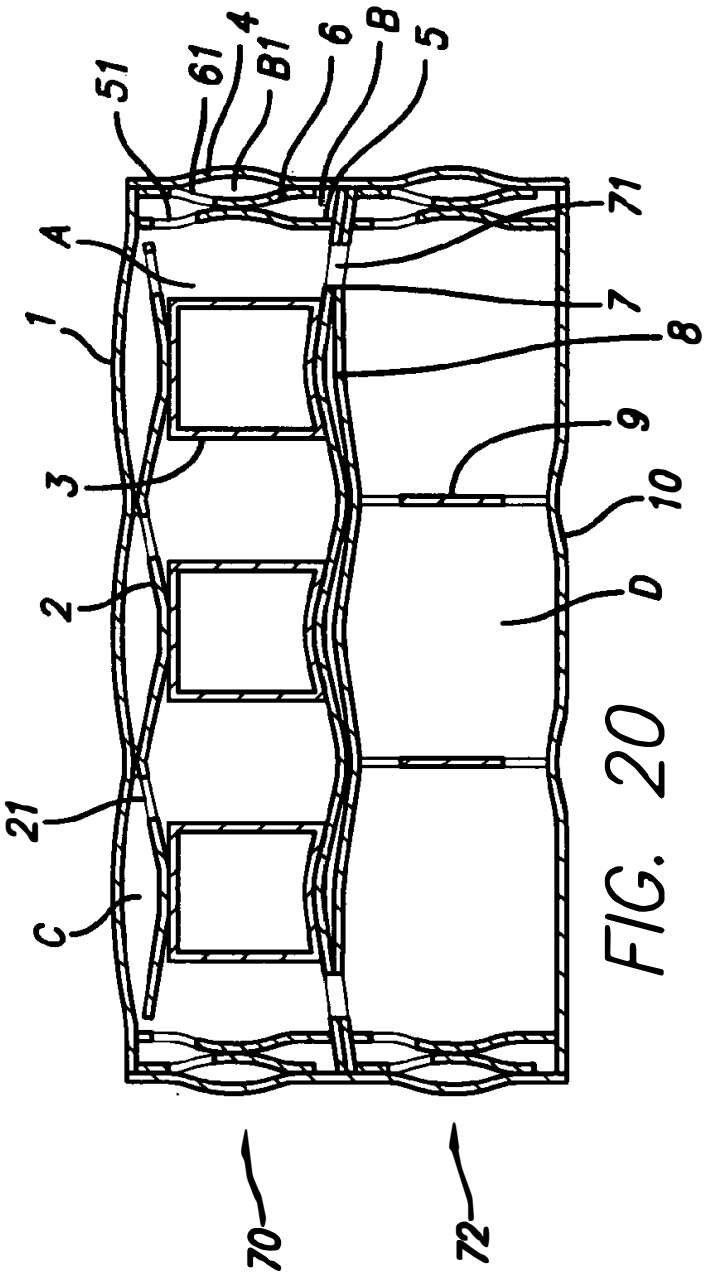
51
61
4
B1
6
B
5
71
A
7
8
1
9
3
10
2
D
21
C
70
72

FIG. 20

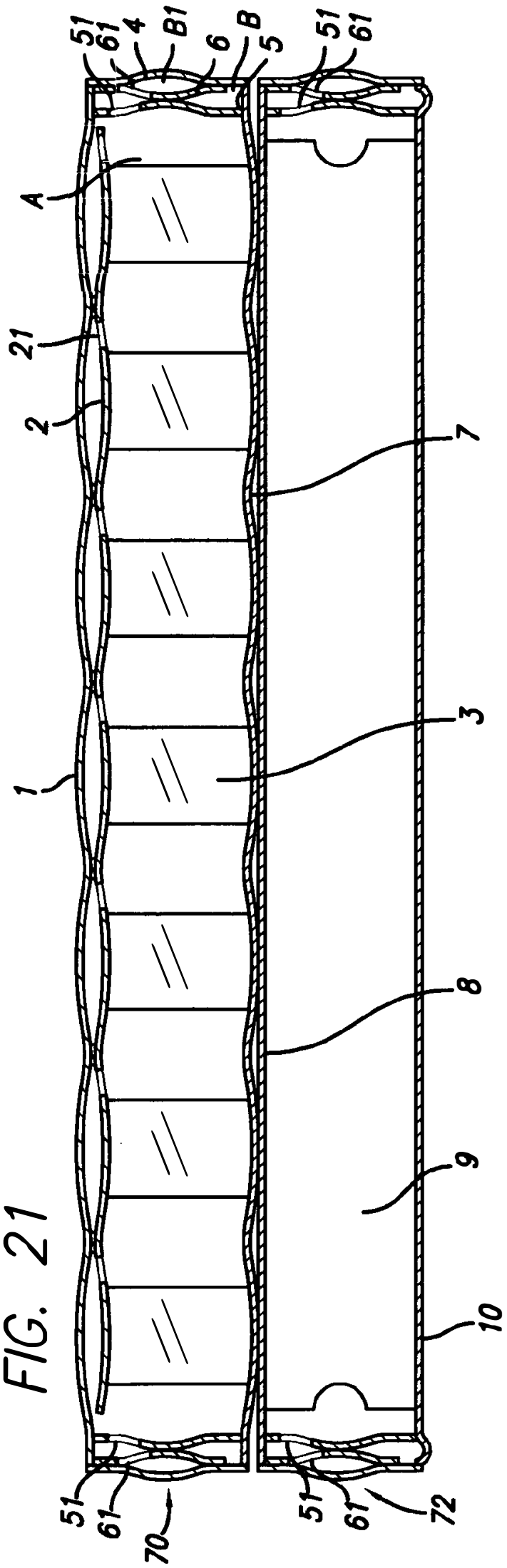
51
61
4
B1
6
B
5
51
61
A
21
2
7
3
1
8
9
10
51
61
70
51
61
72

FIG. 21

AIR-INFLATED MATTRESS

FIELD OF THE INVENTION

The present invention relates to an air-inflated mattress, and more particularly to a supporting structure of an air mattress.

DESCRIPTION OF PRIOR ART

The inflatable mattress, by means of its light weight, easy storage and portable features, not only is used as an outdoor apparatus, but also is accepted as indoor furniture. The conventional prior art inflatable mattress, shown in FIGS. **1** & **2**, is typically comprised of a top layer **1'**, a shroud band **2'**, a plurality of cylindrical anchor separators **3'** and a bottom layer **4'**, The shroud band **2'** connects the top and bottom layers **1'** and **4'** together to form an inflatable bladder. To keep the bladder level and even, a plurality of cylindrical anchor separators **3'** are respectively connected on the top and bottom layers **1'** and **4'**, vertically parallel to the shroud band **2'**, thereby keeping the inflated mattress as similar to a conventional mattress as possible.

But, there are shortcomings existing in the prior art inflatable mattress, as follows:

1. When the bladder is filled fully with air, the surface of the mattress will appear to be full of bumps and holes occurring due to the plurality of cylindrical anchor separators **3'**. The joint portion of the cylindrical anchor separator **3'** is somewhat concave, but the portion between adjacent anchor separators **3'** is somewhat convex, so that the contact area with the body of the user is relatively reduced, which will make the user uncomfortable.
2. When the surface of the mattress is pressed down with extra force, the shroud band will be squeezed outwardly by the compressed air inside of the bladder, to form a crowned bump, further affecting the smoothness of the mattress.
3. As some part of the surface of the mattress is exerted with extra force, such as, if the edge of the mattress is pressed down by an extra force, shroud band **2'** will not resist the force, and that portion of the mattress will collapse, losing stability.

Since the above-mentioned disadvantages exist, the conventional prior art inflatable mattress cannot compare with an innerspring mattress.

OBJECTS OF THE INVENTION

It is therefore an object of the present invention to provide an air-inflated mattress that has an improved top surface, which increases the contact area of the mattress with the human body, for increasing comfort in use.

It is a further object of the present invention to provide an air-inflated mattress that not only keeps the evenness of the surface of the mattress, but also enhances the support intensity of the edges.

SUMMARY OF THE INVENTION

To achieve the above-mentioned objects, the present invention provides an air-inflated mattress, which is comprised of a top layer, a shroud band, a plurality of anchor separators and a bottom layer. Said shroud band connects the top and bottom layers together, to form an inflatable bladder. A middle layer is built below the top layer, by sealing some portions on the inside of the top layer to form a plurality of cross-sealed or

half-sealed cavities. Some or all of said cavities are in fluid communication with the inflatable bladder, so as to form a plurality of small air-pockets on the surface of the mattress.

Said small air-pockets are arrayed on portions of the surface of the air mattress in contact with the human body.

Some of said cavities communicate with the inflatable bladder via air vents built into the middle layer.

The joint lines welding the top and middle layers together, create closed or half-closed patterns to form air pockets.

Anchor separators in cylindrical, or other shapes, have air holes on the joint portions of the anchor separator's trunk, and are connected with said middle layer and bottom layer separately at opposite ends of the trunk.

In another embodiment, the inflatable mattress also includes a middle shroud band and an inner shroud band, wherein said middle shroud band separately connects, by welded joints, to the outer shroud band and the inner shroud band to form alternative anchor points, to divide into several closed or half-closed cavities. Some of said cavities are in fluid communication with said inflatable bladder to form a plurality of air pockets on the outer shroud band of the air mattress.

The middle and inner shroud bands have riser vents communicating with said inflatable bladder.

Said middle shroud band is fixed on the outer shroud band by line welding to form closed or half-closed air pockets.

The present invention has the following advantages:

1. improved evenness and outer look of the surface, due to adding a middle layer below the top layer, and fixing the anchor separators on the middle layer instead of fixing them on the top layer.
2. said middle layer is fixed alternatively with said anchor separators, so that when the bladder constructed by the top and bottom layers and the outer shroud band is fully inflated with air, the concave points of the middle layer, formed by tension of the anchor separators via the joint portion, are covered by the top layer, fixed on the convex points between the anchor separators and middle layer joint spots. The concave points and convex points are balanced as the space of the cavities surrounded by them is inflated fully with air, therefore the surface of the air mattress is flat and the evenness of the mattress is improved greatly.
3. more comfortable, due to several small air pockets formed between joint spots welding the top layer and the middle layer, and the communication of small air pockets in the inflatable bladder. When extra force is exerted on parts of the surface of the air mattress, the air in the small air pockets on the pressed portion of the air mattress will be baffled by the riser vents of the middle layer, escaping slowly without spreading out rapidly, so that the supporting effect of the air mattress is improved, and the air pockets work as air springs to increase the restoring force, so that the user will feel more comfortable.
4. enhanced edge support, based on the same principle, due to adding a middle shroud band and an inner shroud band at the inside of the outer shroud band to construct half-sealed sub-chambers. Meanwhile, the middle shroud band connects to the outer and inner shroud bands, alternatively and respectively, to surround the sub-chambers, so that the inflated sub-chambers not only work as reinforcing ribs, but also make the outer shroud band flat, improving the outer look. When the edge of the air mattress is exerted upon with extra force, due to the limitation of the riser vents, the air filled in the sub-chambers will not flow rapidly to the inside of the blad-

der, so that the supporting effect of the edge of the air mattress is efficiently improved without collapsing or tilting.

BRIEF DESCRIPTION OF THE DRAWINGS

FIG. **1** is an exploded view of the prior art;

FIG. **2** is a perspective view of the prior art;

FIG. **3** is an exploded view of a first embodiment the present invention;

FIG. **4** is a perspective view of the first embodiment;

FIG. **5** is a part-sectional perspective view of the first embodiment;

FIG. **6** is a cross-sectional view taken on lines **6-6** of FIG. **4**;

FIG. **7** is a cross-sectional view taken on lines **7-7** of FIG. **4**;

FIG. **8** is a cross-sectional view taken on lines **8-8** of FIG. **4**;

FIG. **9** is an exploded view of a second embodiment of the present invention;

FIG. **10** is a perspective view of the second embodiment;

FIG. **11** is a cross-section view taken on lines **11-11** of FIG. **10**;

FIG. **11**A is a depiction of the outer side of the mattress of the second embodiment;

FIG. **12** is an exploded view of a third embodiment of the present invention;

FIG. **13** is a perspective view of the third embodiment;

FIG. **14** is a cross-section view taken on lines **14-14** of FIG. **13**;

FIG. **15** is a perspective view of the first embodiment showing the inflation mechanism;

FIG. **16** is a perspective view of the first embodiment showing the deflation mechanism;

FIG. **17** is an exploded view of the top portion of a fourth embodiment;

FIG. **18** is an exploded view of the bottom portion of the fourth embodiment;

FIG. **19** is a part-sectional perspective view of the fourth embodiment;

FIG. **20** is a cross-section view taken on lines **20-20** of FIG. **19**; and,

FIG. **21** is a cross-section view taken on lines **21-21** of FIG. **20**.

DETAILED DESCRIPTION OF PREFERRED EMBODIMENTS

Referring now to FIG. **3**, there is shown an air-inflated mattress provided by the present invention comprising a top layer **1**, a middle layer **2**, a plurality of anchor separators **3**, an outer shroud band **4**, an inner shroud band **5**, a middle shroud band **6** and a bottom layer **7**. All embodiments will have an inflation input means to inflate the mattress, such as a built-in air pump, a valve to receive an external air source, or other inflation means.

Said anchor separators **3** are generally cylindrical in shape, and connect at their top, to middle layer **2** and at their bottom, to bottom layer **7**.

Referring to FIGS. **3**, **4**, **5**, **6**, **7** and **8**, the inner surface **10** of middle shroud band **6** is partly welded to the outer surface **12** of the inner shroud band **5**. The outer surface **14** of middle shroud band **6** is partly welded to the inside surface **16** of outer shroud band **4**. The joint portion **18**, **18'** is arranged alternating to the joint portion **20** of the middle shroud band **6** and the inner shroud band **5**. The lower edge of outer shroud band **4** is welded to the rim or edge **22** of bottom layer **7**, all around, and the lower edge **24** of inner shroud band **5** is welded to the inside of bottom layer **7**, all around. Every anchor separator **3** is put in place, and the separator trunks **25** are welded to the inside **26** of middle layer **2** and to the inner surface **28** of bottom layer **7**, respectively.

Middle layer **2** and top layer **1** are welded **30** alternating with the joint portion **32** of middle layer **2** and anchor separators **3** (see FIG. **7**). The upper edge **34** of inner shroud band **5** is welded to the inner surface of top layer **1** all around, and finally, the top rim **36** of outer shroud band **4** is welded to the edge of the top layer **1** all around, to finish the whole air mattress. Optionally, an inflating and deflating air pump is built into outer shroud band **4**, so that the bladder can be inflated full with air, to form a mattress, (see FIG. **15**).

Referring specifically to FIG. **6** and FIG. **7**, when the air mattress is filled full with air the air enters the space between outer shroud band **4** and inner shroud band **5** filling up side sub-chamber B, then the air passes through inner shroud band **5** entering the space between middle layer **2**, bottom layer **7** and inner shroud band **5**, to form main bladder A.

Middle shroud band **6** is welded onto inner shroud band **5** at **20** and onto outer shroud band **4** at **18**, **18'** alternatively and respectively between said side sub-chambers B to work as a reinforcing rib. On the other hand, the joint spot **18**, **18'** of middle shroud band **6** and outer shroud band **4** is line or point welded, to form a plurality of closed or half-closed circle, rhombus, or other pattern, small side air pockets B**1** on shroud band **4** of the air mattress. Air pockets B**1** communicate with side sub-chamber B, via riser vents **61** of middle shroud band **6**, and via riser vents **91** of middle shroud **6**. Side sub-chamber B communicates with main bladder A, via riser vents **51** of inner shroud band **5**.

Middle layer **2** is welded **30** to top layer **1** to construct a plurality of closed or half-closed circle or rhombus or other pattern air pockets C, which are arrayed on the top surface of the air mattress which is in contact with the human body. Air pockets C are in communication with main bladder A via overlapped riser vents **21** of middle layer **2**.

The present invention has the following advantages:

1. improved evenness and outer look of the surface, due to adding a middle layer **2** below the top layer **1**, and fixing anchor separators **3** onto middle layer **2** instead of onto the top layer **1**. Also, said top and middle layers **1** and **2** are welded alternatively with said anchor separators **3**, so that when bladder A, constructed by the top layer **1** and bottom layer **7** and the outer shroud band **4**, is fully inflated with air, the concave points of the middle layer **2**, formed by drawing of the anchor separators **3** via the joint portion **32**, are covered by convex pockets C of top layer **1**, between anchor separators **3** and middle layer **2** joint spots **30** so that they are balanced, the surface of the air mattress is relatively flat and the evenness of the mattress is improved greatly.
2. more comfortable, due to small air pockets C formed between joint spots welding the top layer **1** and the middle layer **2**, and the communication of small air pockets C in the inflatable bladder A. When extra force is exerted on parts of the surface of the air mattress, the air in small air pockets C, on the pressed portion of the air mattress, will be baffled by the riser vents of the middle layer **2**, escaping slowly without spreading out rapidly, so that the supporting effect of the air mattress, and the air pockets C work as air springs to increase the restoring force, so that the user will feel more comfortable.
3. enhanced edge support, based on the same principle, due to adding a middle shroud band **6** and an inner shroud

band **5**, inside of outer shroud band **4**, to construct half-sealed sub-chambers B. In addition, middle shroud band **6** connects to outer and inner shroud bands **4** and **5** alternatively and respectively to surround sub-chambers B**1**, so that inflated sub-chambers B**1** not only work as reinforcing ribs, but also make outer shroud band **4** flat for improving the outer look of the mattress. When extra force is exerted on the edge of the air mattress, due to the effect of riser vents **61** and **51**, the air filled in sub-chambers B**1** will not flow rapidly to the inside of bladder A, so the supporting effect of the edge of the air mattress is efficiently improved, without any collapsing or tilting.

A second embodiment of the invention is described by reference to FIGS. **9**, **10**, **11** and **11**A. As can be seen, there are no vent holes in the tops of anchor separators **3** and there are no riser vent holes in the sides of middle shroud **6**. There are only two vent holes **52** and **53**, in one side of inner shroud **5**, for air to pass from main bladder A into sub-chamber B. In addition, air passes into the space between top layer **1** and middle layer **2** to fill air pockets C by passing around and over the outer edges of middle layer **2**, which edges are not welded to top layer **1**. Air enters sub-chambers B-**1** by gaps at the air inlet. FIG. **11**A shows the pattern of side sub-chambers B**1** as seen on the surface of outer shroud **4**. In this embodiment, the air moves in and out much more slowly than in embodiment one, making it a stiffer mattress.

A third embodiment of the invention is described by reference to FIGS. **12**, **13** and **14** in which middle layer **2** has a plurality of riser vents **54** adjacent to the joint points **56** of anchor separators **3** to middle layer **2**. In addition there are a plurality of riser vent holes **58** and **60** in inner and middle shrouds **5** and **6**, but only in alternating side sub-chambers B**1** where shrouds **5** and **6** are joined. Riser vents **62** provide airflow between bladder A and subchamber B. This embodiment allows air to flow more quickly than the second embodiment but not as quickly as embodiment one.

FIGS. **15** and **16** show the embodiment of FIG. **4** and show inflation pump **65** set into a housing in the side of shroud **4** of the mattress. Electrical line **66** with a plug (not shown) is connected to pump **65**. The other side of the mattress has an optional valve **67** which may be opened to inflate or deflate the mattress.

A fourth embodiment is shown in FIGS. **17** through **21**. This embodiment comprises a double mattress, having an upper chamber **70** and a lower chamber **72**. Upper chamber **70**, shown in FIG. **17**, comprises top layer **1**, middle layer **2** a plurality of anchor separators **3**, an outer shroud **4**, an inner shroud **5**, a middle shroud **6** and a bottom layer **7**. Bottom layer **7** has a plurality of vent holes **41**.

Lower chamber **72**, shown in FIG. **18**, comprises an upper layer **8**, a plurality of I-beam anchor separators **9**, an outer shroud **4**, an inner shroud **5**, a middle shroud **6**, and a bottom layer **10**. Upper layer **8** has a plurality of vent holes **42** which match up with vent holes **41** in layer **7** of upper chamber **70**, so that air may pass between the two chambers, **70** and **72**. Layers **7** and **8** are welded together around air vent holes **41** and **42**.

Air passes through vent holes **51** and **61** into sub-chambers B and B**1** and into bladder A and through riser vents **21** into small air pockets C. This embodiment provides a high-rise mattress with superior support provided by lower chamber **72** having I-beam anchor separators **9** for added support. I-beam anchor separators **9** are welded to the top of layer **10** and to the bottom of layer **8** and are placed below and in between anchor separators **3**, to keep the lower bladder D level and even. The double mattress is easier to sit on or lie down on because of its greater height from the floor and it also raises the user farther from a cold floor.

While I-beams are used as anchor separators in the lower chamber, as shown in this embodiment, any other types of anchor separators, as described previously hereinabove, may be utilized.

Variations of the placement and the number of riser vents or holes between the chambers described may be made at the desire of the manufacturer, which will change the stiffness and feel of the mattress. However, the use of additional shrouds and the additional layer in the construction as described, provides an air mattress which is firmer, more comfortable for the user and more like an innerspring mattress.

While the air-inflated mattress of the present invention has been described with reference to certain embodiments, the invention is not limited to the particular embodiments disclosed. Other variations, in design may occur to those skilled in the art without departing from the scope of the invention. The scope of the invention is limited only by the claims appended hereto.

We claim:

1. An air-inflated mattress comprising a top layer, an outer shroud band, a plurality of anchor separators and a bottom layer, said outer shroud band connecting the top and bottom layers to form an inflatable bladder; a middle layer below said top layer partially sealed to the top layer to form a plurality of sealed or half-sealed cavities, in which some or all of said cavities are in fluid communication with the inflatable bladder, via a plurality of air vents in the middle layer, forming a plurality of air-pockets arrayed on the top surface of the mattress, wherein said anchor separators are generally cylindrical in shape, are welded at the top to the middle layer and at the bottom to the bottom layer and have an air vent hole through the top weld with the middle layer.

2. The air-inflated mattress of claim **1**, wherein joint lines weld the top and middle layers together, which create closed or half-closed patterns of air pockets.

3. The air-inflated mattress of claim **1**, further comprising a middle shroud band and an inner shroud band, wherein said middle shroud band is separately welded to the outer shroud band and the inner shroud band to form a plurality of closed or half-closed cavities, some or all of said cavities being in fluid communication with said inflatable bladder to form a plurality of air pockets on the outer shroud band of the air mattress.

4. The air-inflated mattress of claim **3**, wherein said middle and inner shroud bands have riser vents which communicate with said inflatable bladder.

5. The air-inflated mattress of claim **3**, wherein said middle shroud band is welded to the outer shroud band to form closed or half-closed air pockets.

6. An air-inflated mattress comprising a top layer, an outer shroud band, a plurality of anchor separators and a bottom layer, said outer shroud band connecting the top and bottom layers to form an inflatable bladder; a middle layer below said top layer partially sealed to the top layer to form a plurality of sealed or half-sealed cavities, in which some or all of said cavities are in fluid communication with the inflatable bladder, forming a plurality of air-pockets on the top surface of the mattress, further comprising a middle shroud band and an inner shroud band, wherein said middle shroud band is separately welded to the outer shroud band and the inner shroud band to form a plurality of closed or half-closed cavities, some or all of said cavities being in fluid communication with

said inflatable bladder to form a plurality of air pockets on the outer shroud band of the air mattress.

7. An air-inflated mattress comprising a top layer, an outer shroud band, a plurality of anchor separators and a bottom layer, said outer shroud band connecting the top and bottom layers to form an inflatable bladder; a middle layer below said top layer partially sealed to the top layer to form a plurality of sealed or half-sealed cavities, in which some or all of said cavities are in fluid communication with the inflatable bladder, via a plurality of air vents in the middle layer, forming a plurality of air-pockets arrayed on the top surface of the mattress, wherein said anchor separators are welded at the top to the middle layer and at the bottom to the bottom layer and have an air vent hole through the top weld with the middle layer.

8. The air inflated mattress of claims **1**, **6**, or **7**, further comprising a built-in inflation or inflation/deflation pump.

* * * * *