IN THE UNITED STATES PATENT AND TRADEMARK OFFICE

BEFORE THE PATENT TRIAL AND APPEAL BOARD

INTEX RECREATION CORP., BESTWAY (USA) INC.,
WALMART INC., WAL-MART STORES TEXAS, LLC, WAL-MART.COM
USA LLC, and SAM'S WEST, INC. *d/b/a* SAM'S CLUB
Petitioners

v.

TEAM WORLDWIDE CORPORATION
Patent Owner

Patent No. 7,246,394
Filing Date: Jan. 7, 2006
Issue Date: Jul. 24, 2007
Title: INFLATABLE PRODUCT WITH BUILT-IN
HOUSING AND SWITCH PIPE

Inter Partes Review No. IPR2018-00870

PETITION FOR *INTER PARTES* REVIEW
UNDER 35 U.S.C. §§ 311-319 AND 37 C.F.R. § 42.100 *ET SEQ*.

TABLE OF CONTENTS

I. Mandatory Notices (37 C.F.R. § 42.8) 1
- **A.** Real Parties In Interest 1
- **B.** Related Matters 1
- **C.** Counsel and Service Information 2

II. Payment of Fees (37 C.F.R. § 42.103) 3

III. Grounds for Standing (37 C.F.R. § 42.104(a)) 3

IV. The '394 Patent Background 4
- **A.** Overview 4
- **B.** File History 6
- **C.** The Level of Ordinary Skill in the Art 7

V. The State Of The Art 7
- **A.** Overview 8
  - **1.** Inflatable Products and Pumps in the 19th Century 8
  - **2.** Inflatable Products and Pumps in the 20th Century 9
- **B.** Relevant Design Considerations 19
- **C.** The Challenged Claims 21

VI. Precise Relief Requested 22
- **A.** Claims and Statutory Grounds 22
- **B.** Claim Construction 22
  - **1.** "inflatable body" 23
  - **2.** "fan" 26
  - **3.** "pipe" 27

VII. Relief Requested 28
- **A.** GROUND 1: The Challenged Claims are Obvious in View of Wu in Combination with Chaffee 34
  - **1.** Claim 1 35
  - **2.** Claim 2 and 3. 60
  - **3.** Claim 4-6 61

4. Claim 7. 62
5. Claim 8 and 9. 64
6. Claim 10 and 11. 66
7. Claim 12 68
8. Claims 16-23 68
B. GROUND 2: The Challenged Claims are Obvious in View of Wu in Combination with Goldsmith 69
1. Ground 2 is Not Redundant of Ground 1 69
2. Claim 1 69
3. Claims 2 and 3 77
4. Claims 4-11 78
5. Claim 12 78
6. Claims 16-23 78
C. GROUND 3: The Challenged Claims are Obvious in View of Wu in Combination with Parienti 79
1. Ground 3 is Not Redundant of Grounds 1 or 2 79
2. Claim 1 79
3. Claims 2 and 3 86
4. Claims 4-11 86
5. Claim 12 87
6. Claims 16-23 87
D. GROUND 4: The Challenged Claims are Obvious in View of Wu in Combination with Goldsmith in Further Combination with Chaffee 87
1. Ground 4 is Not Redundant of Grounds 1-3 87
2. Challenged Claims 88
E. No Secondary Indicia of Non-obviousness 89
VIII. Conclusion 90

TABLE OF AUTHORITIES

Page(s)

FEDERAL CASES

Amneal Pharms., LLC v. Supernus Pharms., Inc.,
IPR2013-00368, Paper 6 (PTAB Dec. 17, 2013) 89

Dynamic Drinkware, LLC v. Nat'l Graphics, Inc.,
800 F.3d 1375 (Fed. Cir. 2015) 29

Dystar Textilfarben GmbH v. Patrick Co.,
464 F.3d 1356 (Fed. Cir. 2006) .....passim

Geo. M. Martin Co. v. Alliance Machine Sys., Int'l, LLC,
618 F.3d 1294 (Fed. Cir. 2010) 44

In re CSB-Sys. Int'l, Inc.,
832 F.3d 1335 (Fed. Cir. 2016) 23, 28

In re Haase,
542 F. Appx. 962 (Fed. Cir. Oct. 30, 2013).....44, 50, 76, 84

In re Keller,
642 F.2d 413 (CCPA 1981) 29

In re Mouttet,
686 F.3d 1322 (Fed. Cir. 2012) 29, 34, 69, 79

In re Trans TEXHoldings Corp.,
498 F.3d 1290 (Fed. Cir. 2007) 24, 27

KSR Int'l Co. v. Teleflex Inc.,
550 U.S. 398,420 (2007).....passim

Pfizer, Inc. v. Ranbaxy Labs. Ltd.,
457 F.3d 1284 (Fed. Cir. 2006) 23

Powell v. Home Depot U.S.A., Inc.,
663 F.3d 1221 (Fed. Cir. 2011) 25

SkinMedica, Inc. v. Histogen Inc.,
727 F.3d 1187 (Fed. Cir. 2013) 26

Tokai Corp. v. Easton Enters., Inc.,
632 F.3d 1358 (Fed. Cir. 2011) 89

Unwired Planet, LLC v. Google Inc.,
841 F.3d 995 (Fed. Cir. 2016) 29, 41, 71, 82

LIST OF EXHIBITS

Exhibit No.*	Description
1001	U.S. Patent No. 7,246,394 ("'394 Patent" or "Wang")
1002	Declaration of Joseph J. Beaman Jr.
1003	File history for U.S. Patent No. 7,246,394
1004	TWW's 7-21-2017 Infringement Contentions in *Team Worldwide Corporation v. Wal-Mart, et al.*, 2:17-cv-235
1005	U.S. Patent No. 6,698,046 ("Wu")
1006	U.S. Patent No. 7,039,972 ("Chaffee")
1007	U.S. Patent No. 2,493,067 ("Goldsmith")
1008	U.S. Patent No. 6,018,960 ("Parienti")
1009	U.S. Patent No. 4,862,533 ("Adams")
1010	U.S. Patent No. 4,890,344 ("Walker")
1011	SMC Pneumatics, Inc.; Basic Pneumatics: a manual for fluid power components and practical applications (1997) ("Basic Pneumatics")
1012	U.S. Patent No. 4,938,528 ("Scott")
1013	U.S. Patent No. 5,529,377 ("Miller")
1014	Insta-Bed Instruction Sheet
1015	TWW's Opening Claim Construction Brief in Team Worldwide Corporation v. Wal-Mart, et al., 2:17-cv-235
1016	11/20/2006 Applicant Reply; Ex. 6 TWW Opening Claim Construction Brief

Exhibit No.*	Description
1017	U.S. Patent No. 10,139
1018	U.S. Patent No. 28,150 ("Broad")
1019	U.S. Patent No. 66,706 ("Hamilton")
1020	U.S. Patent No. 151,400 ("Keeler")
1021	U.S. Patent No. 187,397 ("Macintosh")
1022	U.S. Patent No. 277,979 ("Blochman")
1023	U.S. Patent No. 388,037 ("Hargin")
1024	U.S. Patent No. 486,696 ("Curlin")
1025	U.S. Patent No. 585,834 ("Ruth")
1026	U.S. Patent No. 1,772,310 (“Hart”)
1027	U.S. Patent No. 2,437,006 (“Simpson”)
1028	U.S. Patent No. 2,690,295 (“Rand 295”)
1029	U.S. Patent No. 2,719,986 (“Rand 986”)
1030	U.S. Patent No. 4,583,255 (“Mogaki”)
1031	U.S. Patent No. 5,232,353 (“Grant”)
1032	U.S. Patent No. 5,876,359 (“Bock”)
1033	U.S. Patent No. 4,394,784 (“Swenson”)
1034	U.S. Patent No. 5,467,543 (“Fink”)

Exhibit No.*	Description
1035	British Patent GB 959,103 ("Talley")
1036	U.S. Patent No. 3,462,778 ("Whitney")
1037	U.S. Patent No. 5,103,518 ("Gilroy")
1038	U.S. Patent No. 5,947,168 ("Viard")
1039	U.S. Patent No. 5,152,579 ("Bishai")
1040	German Patent Pub. Appl. No. 1 909 938 ("de Vries")
1041	U.S. Patent No. 3,485,240 ("Fountain")
1042	U.S. Patent No. 5,235,713 ("Guthrie")
1043	U.S. Patent No. 6,447,361 ("Akiyama")
1044	U.S. Patent No. 2,684,672 ("Summerville")
1045	U.S. Patent No. 5,611,772 ("Fujimoto")
1046	U.S. Patent No. 4,702,235 ("Hong")
1047	U.S. Patent No. 6,267,739 ("Cengarle")
1048	U.S. Patent No. 795,108 ("Doellinger")
1049	U.S. Patent No. 2,698,028 ("Lee")
1050	U.S. Patent No. 3,155,991 ("Dunham")
1051	U.S. Patent No. 6,287,095 ("Saputo")
1052	U.S. Patent No. 5,711,041 ("Chen")

Exhibit No.*	Description
1053	U.S. Patent No. 5,794,289 ("Wortman")
1054	U.S. Patent No. 3,068,494 ("Pinkwater")
1055	U.S. Patent No. 3,653,083 ("Lapidus")
1056	U.S. Patent No. 4,197,837 ("Tringali")
1057	U.S. Patent No. 5,564,963 ("Chan")
1058	U.S. Patent No. 4,225,989 ("Corbett")
1059	Excerpt from McGraw-Hill Dictionary of Scientific and Technical Terms (4th Ed. 1989)
1060	Excerpt from The New Shorter Oxford English Dictionary (1993)
1061	Excerpt from Webster's New World Dictionary and Thesaurus (1996)
1062	Joint Claim Construction Statement in Team Worldwide Corporation v. Wal-Mart, et al., 2:17-cv-235 ("JCCS")
1063	U.S. provisional application No. 60/280,040 ("Chaffee '040 Application")
1064	U.S. provisional application No. 60/204,836 ("Chaffee '836 Application")
1065	Declaration of Mark Slaton for Basic Pneumatics
1066	U.S. Provisional Appl. No. 60/278,925 ("Wu Provisional" or "Wu '925 Application")
1067	Claim Chart for Wu '925 Application
1068	Inflate animation of U.S. Patent No. 6,698,046 Fig. 2
1069	Deflate animation of U.S. Patent No. 6,698,046 Fig. 2
1070	Inflation/Deflation Animation of U.S. Patent No. 6,698,046 Fig. 1

Exhibit No.*	Description
1071	U.S. Patent No. 6,832,629 to Wu
1072	3-15-2018 Claim Construction Memorandum Opinion and Order in Team Worldwide Corporation v. Wal-Mart, et al., 2:17-cv-235
1073	Declaration of Rich Bullers for Basic Pneumatics

*Citations to page numbers for Exhibits 1003, 1004, 1011, 1014-1016, 1040, 1059-1064, 1066, and 1067 refer to the exhibit page numbers added for each exhibit.

Pursuant to 35 U.S.C. §§ 311-319 and 37 C.F.R. § 42.100 *et seq*., Intex Recreation Corp., Bestway (USA) Inc., Walmart Inc., Wal-Mart Stores Texas, LLC, Wal-Mart.com USA LLC, and Sam's West, Inc. *d/b/a* Sam's Club ("Petitioners") respectfully request *inter partes* review ("IPR") of claims 1-12, 16-23 (the "Challenged Claims") of U.S. Patent No. 7,246,394 (the "'394 Patent") (Ex. 1001).

I. MANDATORY NOTICES (37 C.F.R. § 42.8)

A. Real Parties In Interest

Petitioners are real parties-in-interest for this petition, as are the following entities: Intex Development Company Ltd., Intex Industries (Xiamen) Co., Ltd., Intex Marketing Ltd., Intex Trading Ltd., Bestway Global Holdings, Inc., Bestway (Hong Kong) International, Ltd., Bestway Inflatables & Materials Corp., Bestway (Hong Kong) Enterprise Co. Ltd., Bestway (Nantong) Recreation Corp., The Coleman Company, Inc., and Newell Brands Inc.

B. Related Matters

The '394 Patent is the subject of a patent infringement lawsuit brought by Patent Owner Team Worldwide Corporation ("TWW") against Walmart, Inc., Wal-Mart Stores Texas, LLC, Wal-Mart.com USA LLC, and Sam's West, Inc. *d/b/a* Sam's Club, in the United States District Court for the Eastern District of

Texas, Case No. 2:17-cv-00235 (the "Litigation"), in which parties Intex Recreation Corp., Intex Trading Ltd., The Coleman Company, Inc., and Bestway (USA), Inc. have intervened.

In the Litigation, TWW is asserting two other patents: U.S. Patent Nos. 9,211,018 and 7,346,950. Petitioners are filing IPR petitions on these two patents contemporaneously with this Petition.

C. Counsel and Service Information

Pursuant to 37 C.F.R. §§ 42.8(b)(3) and 42.10(a), Petitioners hereby identify their lead and backup counsel as follows:

Lead Counsel
R. Trevor Carter
Reg. No. 40,549
FAEGRE BAKER DANIELS LLP
300 N. Meridian St., Suite 2700
Indianapolis, IN 46204
Phone: 317-237-1352
Trevor.Carter@faegrebd.com
(Counsel for Intex)

Back-Up Counsel
Andrew M. McCoy
Reg. No. 65,046
FAEGRE BAKER DANIELS LLP
300 N. Meridian St., Suite 2700
Indianapolis, IN 46204
Phone: 317-237-1352
Andrew.McCoy.PTAB@faegrebd.com
(Counsel for Intex)

Additional Back-Up Counsel
Alexander P. Ott
Reg. No. 63,110
MCDERMOTT WILL & EMERY
500 North Capitol Street, N.W.
Washington, DC 20001
Phone: 202-756-8496
aott@mwe.com
(Counsel for Bestway)

Additional Back-Up Counsel
Brian A. Jones
Reg. No. 68,770
MCDERMOTT WILL & EMERY
444 W. Lake, Suite 4000
Chicago, IL 60606
Phone: 312-984-7700
bajones@mwe.com
(Counsel for Bestway)

Additional Back-Up Counsel
David M. Tennant
Reg. No. 48,362
White & Case LLP
701 Thirteenth Street, NW
Washington, DC 20005-3807
Phone: 202-626-3684
dtennant@whitecase.com
(Counsel for Walmart)

Additional Back-Up Counsel
Nathan Y. Zhang
Reg. No. 71,401
White & Case LLP
3000 El Camino Real
2 Palo Alto Sq., Suite 900
Palo Alto, CA 94306
Phone: 650-213-0300
nathan.zhang@whitecase.com
(Counsel for Walmart)

Please address all correspondence to the lead and back-up counsels at the addresses shown above. Petitioners also consent to electronic service to all of the email addresses shown above. Pursuant to 37 C.F.R. § 42.10(b), a Power of Attorney accompanies this Petition for each Petitioner.

II. PAYMENT OF FEES (37 C.F.R. § 42.103)

Petitioners request review of 20 claims. In accordance with 37 C.F.R. § 42.15(a) and 42.103, Petitioners authorize the Commissioner to charge the $15,500 request fee, $15,000 post-institution fee, $3,000 post-institution excess claim fee (total of $33,500), and any additional required fees to Deposit Account No. 02-0390.

III. GROUNDS FOR STANDING (37 C.F.R. § 42.104(a))

Petitioners hereby certify that the ’394 Patent is available for IPR and that Petitioners are not barred or estopped from requesting an IPR challenging the ’394 Patent claims on the grounds identified in this Petition.

IV. THE '394 PATENT BACKGROUND

A. Overview

The '394 Patent is directed to an inflatable product with a built-in air pump assembly. Ex. 1001, Title Page.

Figures 3A-3D illustrate an exemplary embodiment of the built-in air pump assembly recited in the Challenged Claims. Ex. 1001, 4:13-39, Figs. 3A-3D (third embodiment); Ex. 1003, 72-79 (explaining that the Challenged Claims cover "the single disclosed species shown in Figures 3A-3D"). This embodiment includes an air pump assembly with a movable air conduit—which a person having ordinary skill in the art ("POSA") would have understood to be a type of directional control valve—for switching between an inflate mode and deflate mode without reversing the direction of the pump (a "Uni-directional Pump Assembly"). Ex. 1002 ("Decl."), ¶¶28-33.

The Uni-directional Pump Assembly embodiment includes "a housing 31, a fan and motor 33 [green], a switching pipe 32 [orange], a flap 36 [blue] and a cover 35 [red]." Ex. 1001, 4:15-16, Figs. 3A-3B; Decl., ¶34.

Figure 3A	Figure 3B
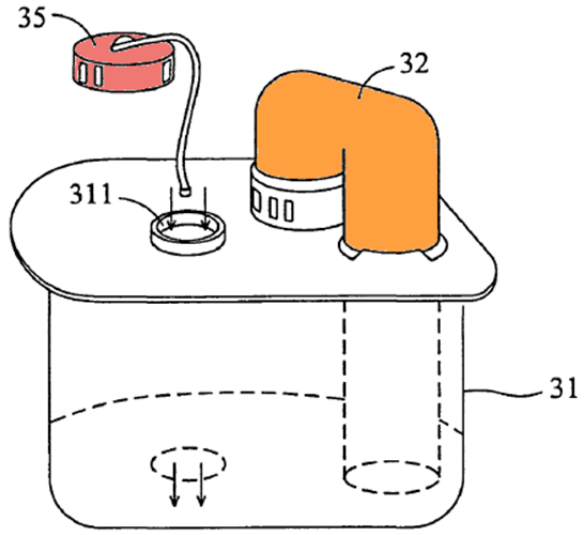 FIG. 3A	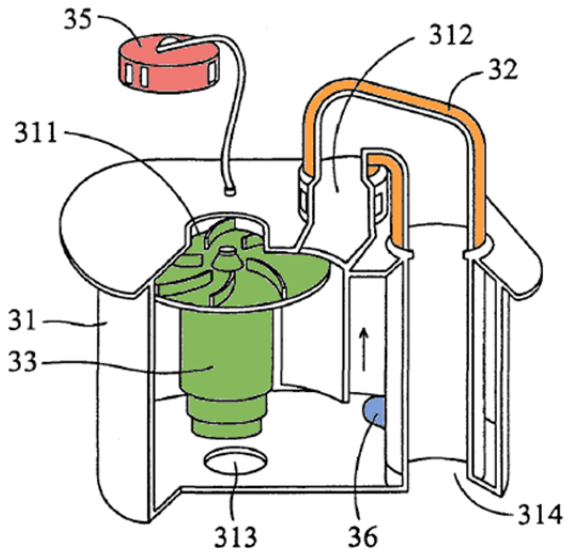 FIG. 3B

"During inflation, the switching pipe 32 [orange] is connected to the air outlet 312 on the top surface of the housing 31." Ex. 1001, 4:22-24; Decl., ¶34. When the cover 35 (red) is removed and the fan and motor 33 (green) are actuated, "[a]ir flows through the air intake 311 and the air outlet 313, and into the inflatable product [not shown]." Ex. 1001, 4:26-28; Decl., ¶34.

Referring to Figures 3C and 3D, below, to switch the Uni-directional Pump Assembly embodiment to the deflate position, "the switching pipe 32 [orange] is switched from the air outlet 312 to the air intake 311 on the top surface of the housing 31." Ex. 1001, 4:29-31; Decl., ¶35.

Figure 3C	Figure 3D
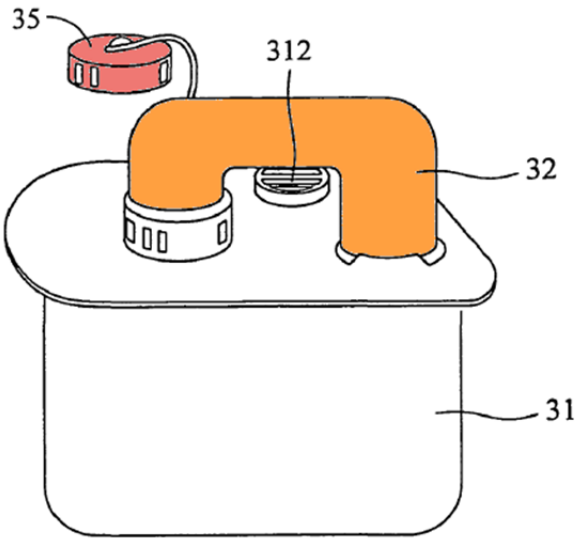 FIG. 3C	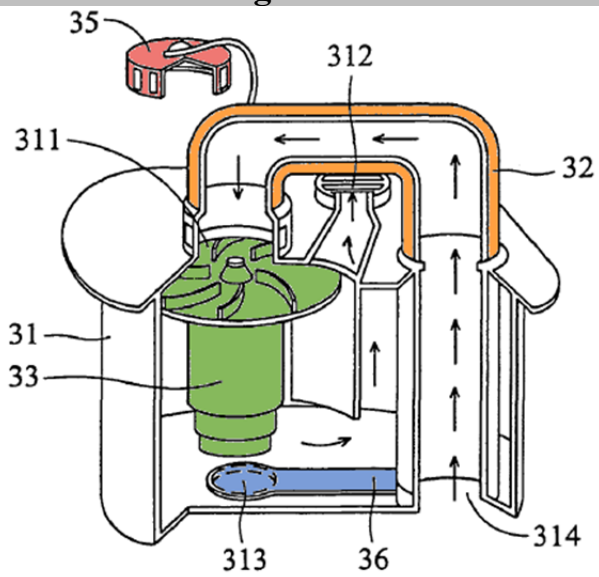 FIG. 3D

Because the flap 36 (blue) "is firmly connected to the switching pipe 32" (Ex. 1001, 4:17-18), "the flap 36 follows the switching pipe 32 to rotate to close the air outlet 313 on the bottom surface of the housing 31" (*id.* at 4:31-33). Decl., ¶35. As a result, "[a]ir flows through the air intake 314, the switching pipe 32 and the air intake 311, and into the housing 31" and, then, "air flows out from the air outlet 312." Ex. 1001, 4:35-38; Decl., ¶35.

B. <u>File History</u>

The '394 Patent issued from U.S. Application No. 11/326,829 (the "'829 Application"), which is a divisional application of U.S. Application No. 09/886,030 (the "'030 Application") filed on June 22, 2001 (the "Priority Date"). Ex. 1001, Title Page.

Prosecution of the '829 Application included a restriction requirement and one substantive office action. *See generally* Ex. 1003. In response to the restriction requirement, the applicant elected, ***without traverse,*** for further prosecution "claims 1-15 relate[d] to the single disclosed species shown in Figures 3A-3D[.]" *Id.* at 72. The substantive office action and response did not address any claim construction issue presented here or analyze any prior art asserted in this Petition. *Id.* at 60-66; *see also* Decl., ¶¶36-50.

C. <u>The Level of Ordinary Skill in the Art</u>

A POSA would have had either: (1) a bachelor's degree in mechanical engineering, or an equivalent field; or (2) an associate's degree in mechanical engineering, or an equivalent field, and two years of practical experience in product design and manufacturing. Decl., ¶¶26-27.

V. THE STATE OF THE ART

According to TWW, having a pump ***built-into*** an inflatable product is the heart of the supposed invention claimed in the '394 Patent, as it purportedly "launch[ed] an[] entirely new category of airbed in the industry." Ex. 1015, at 8-10. However, inflatable products with a built-in pump design have been known for more than a century. Decl., ¶52; Ex. 1023, Fig. 1. The remaining limitations of

the Challenged Claims are nothing more than well-known components and functionality of conventional Uni-directional Pump Assemblies. Decl., ¶51.

A. Overview

1. *Inflatable Products and Pumps in the 19th Century*

Inflatable products and means for inflating these products have been around for centuries. Decl., ¶52 (citing Exs. 1017-25). Early on, there were two prevalent means for inflation: (1) exhalation; and (2) bellows pumps, which were more **efficient**. Decl., ¶¶53-55 (citing Exs. 1018, 1020, 1023).

Notably, in 1888, Hargin recognized the **durability** and **user convenience** advantages of an inflatable mattress with a built-in bellows pump design "wholly inclosed[sic] within" an air mattress," shown in Figure 1 in orange, below. Decl., ¶¶56-60; Hargin (Ex. 1023), 1:53-62, 2:128-129, 3:10-18, Figs. 1-2.

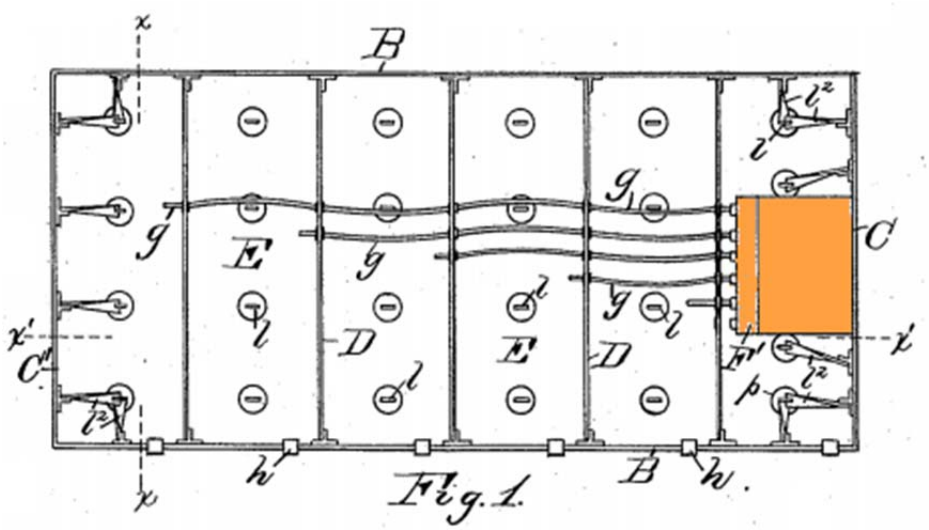

Hargin's design: (1) promoted "strength and durability"; (2) was more convenient for users, as it "provided [a] means for readily inflating [the mattress] when desired"; and (3) protected the pump from "accident, injury, or separation when plunged into water" and used as a life raft. Hargin, 1:9-18; 2:129-131, 3:18-22; Decl., ¶¶59-60.

In short, early on inventors were driven by numerous known factors in designing inflatable products with pumps, including: (1) efficiency; (2) durability; and (3) user convenience. Decl., §VI.A.1.

2. *Inflatable Products and Pumps in the 20th Century*

Prior art inventors continued to innovate inflatable products and pumps well into the 20th century—particularly with respect to: (a) pump automation; (b) inflatable product flow control; and (c) pump layout. Decl., §VI.A.2.

a. Pump Automation

First used in the early 1900s, motorized, automated pump designs enabled more **efficient** inflatable product pump designs, both in terms of the time to inflate the product and the labor involved. Decl., ¶¶61-62 (citing Exs. 1026-29).

Early designs, however, initially had several recognized deficiencies, including their large size and heavy weight. Decl., ¶63. However, these initial automated pump designs (such as reciprocating diaphragm pumps, *see* Exs. 1027-

1032), had several recognized deficiencies, including their large size and heavy weight. Decl., ¶¶63-64; *see also* Ex. 1028, 2:18-47, 3:12-16, Figs. 2-3. These design deficiencies required larger, more specialized structures for the pumps to even operate. Ex. 1031, 6:29-36; Decl., ¶65.

Accordingly, prior art inventors began focusing on **decreasing the size** and **weight** of pump designs. Decl., ¶66.

Bock *et al.*, for example, disclosed a rotational automated pump design in the form of a "rotary vane pump," which were "smaller and lighter," "permit[ing] the overall controller to be of smaller size and weight for ease of transportability and installation." Bock (EX. 1032), 1:61-65; Decl., ¶67 (citing Exs. 1006, 1007, 1010, 1033, 1034 as additional examples of rotational automated pump designs).

Prior art inventors also recognized that the various types of automated pumps were largely interchangeable with one another. *See, e.g.,* Ex. 1006, 3:59-4:10 (describing the preferred embodiment as including a fan/blower pump but noting that "[o]ther types of pumps, such as diaphragm pumps, may also be used"); Decl., ¶68 (citing Exs. 1006, 1010, 1027, 1032, 1034, 1035, 1036, 1030).

b. Inflatable Product Flow Control

While all automated pumps were used to power inflate the inflatable products, the prior art differed as to how they deflated the inflatable products. Decl., ¶69.

Swenson *et al.*, for example, disclosed a solenoid valve (valve 48, below) for accomplishing a power inflate, and ***vent*** deflate function by opening a solenoid valve while the motor 52 was inactive for air to exhaust out of the mattress through the pump. Swenson (Ex. 1033, 4:68-5:18); Decl., ¶¶70-71 (citing Exs. 1026, 1031, 1037 as additional examples).

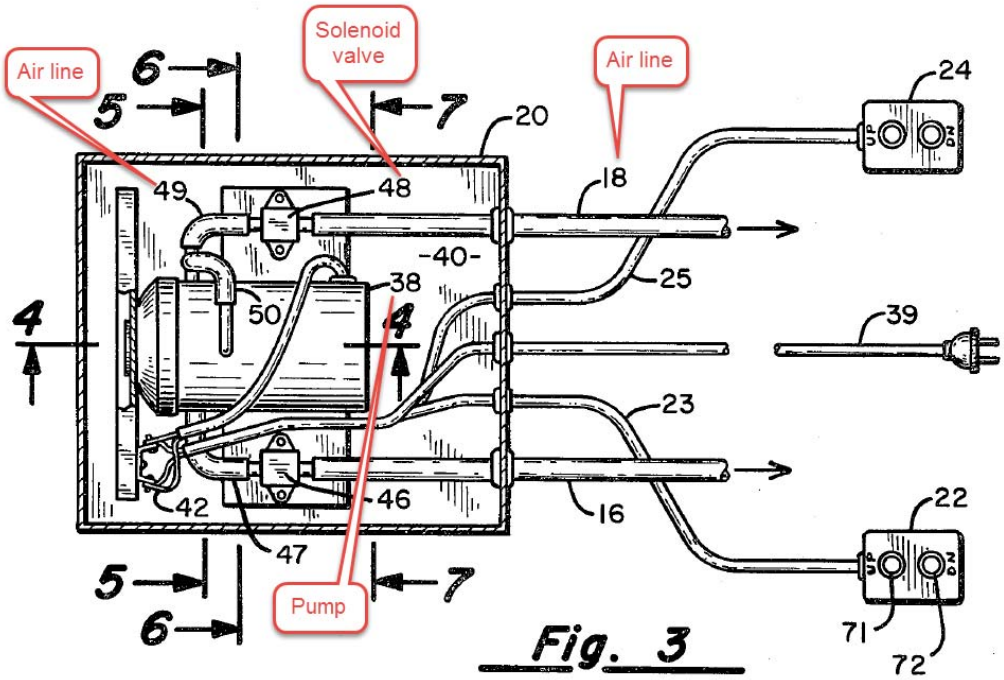

Other designs, however, offered power inflate and ***power*** deflate functionality, which prior art inventors recognized as offering marked improvements over vent deflate designs like Swenson—including, in particular, **efficiency** of time and user effort. *See, e.g.,* Ex. 1013, 4:27-34 ("The advantage of such a system is that the deflation rate is quick and matches the inflation rate. Also the air cell can be fully evacuated[.]");Decl., ¶¶72-73 (citing Exs. 1012, 1038).

In general, there were two primary pump designs that offered these benefits in a power inflate/power deflate configuration: (1) a reversible motor pump ("**Reversible Pump Assembly**"); and (2) a uni-directional motor and pump that included a directional control valve ("**Uni-directional Pump Assembly**"). *See* Decl., ¶74.

Parienti disclosed one example of an inflatable mattress with a Reversible Pump Assembly. *See* Parienti (Ex. 1008), 1:22-24; *see also* Decl., ¶75 (citing Exs. 1006, 1013, 1039 as additional examples of Reversible Pump Assemblies). Referring to Figures 1 and 4, below, Parienti's Reversible Pump Assembly included "a motor (2) [orange] driving a turbine (4) [blue]" (*id.* at 1:28-29) in a housing (gray), and "[s]witching from inflating to [the] deflating function [wa]s performed by reversing the polarity of the motor (2) that drives the turbine (4)." Parienti, 2:64-66; Decl., ¶¶76-77.

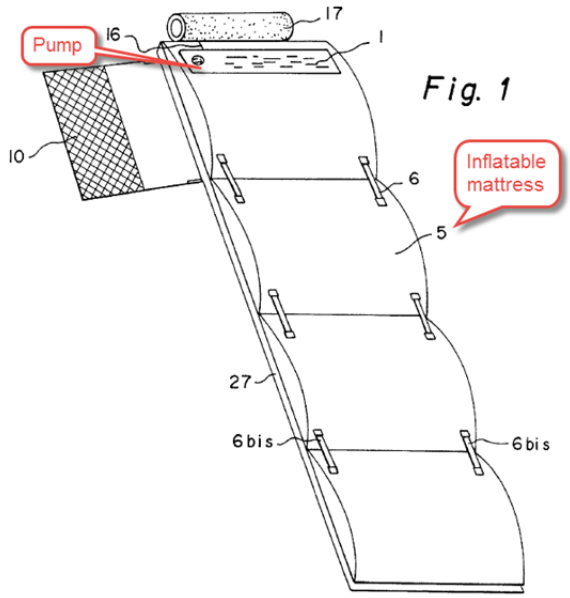

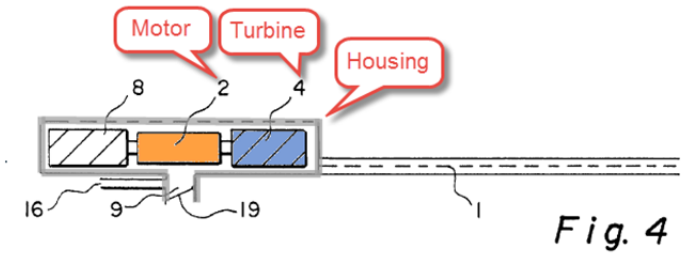

As a result, "[i]nflating is performed through the rotation of the turbine in one direction" and "deflating is performed through the rotation of the turbine in the reverse direction." Parienti, 2:66-3:4; Decl., ¶77.

Scott, by contrast, disclosed a "single, non-reversible pump for both inflating and deflating" an inflatable product (i.e., a Uni-directional Pump Assembly)—the second type of power inflate, power deflate pump. *See* Scott (Ex. 1012), 1:13-15; Decl., ¶78 (citing Exs. 1005, 1010, 1040, 1041, 1042, 1043 as additional examples).

As shown in Figure 12, below, Scott's Uni-directional Pump Assembly accomplished power inflate, power deflate functionality using a "two position, four way valve 68," which a POSA would have understood to be a type of directional

control valve. Scott, 1:10-15, 5:49-50. Decl., ¶¶79-80.[1] Figure 12, below, depicts the two positions of valve 68: in the top image (the inflation position, outlined in blue), valve 68 connects pump inlet 34 with atmosphere and pump outlet 32 with bladder 22 such that bladder 22 is inflated; and in the bottom image (the deflation position, outlined in green), valve 68 connects pump inlet 34 with bladder 22 and pump outlet 32 with atmosphere such that bladder 22 is deflated. Scott, 5:50-66; *see also* Decl., ¶81.

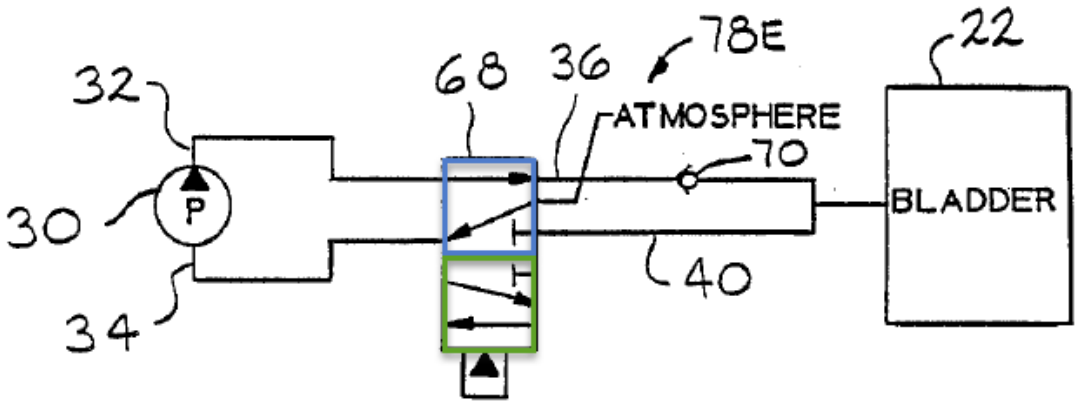

FIG. 12

(**Inflation**)

[1] Although Scott only depicted the directional control valve 68 in schematic form, POSAs knew that directional control valves could take limited forms, including, for example, rotary valves. *See* Ex. 1011, Fig. 7.3; *see also id.* at 73-78; Exs. 1065, 1073; Decl., ¶¶82-86.

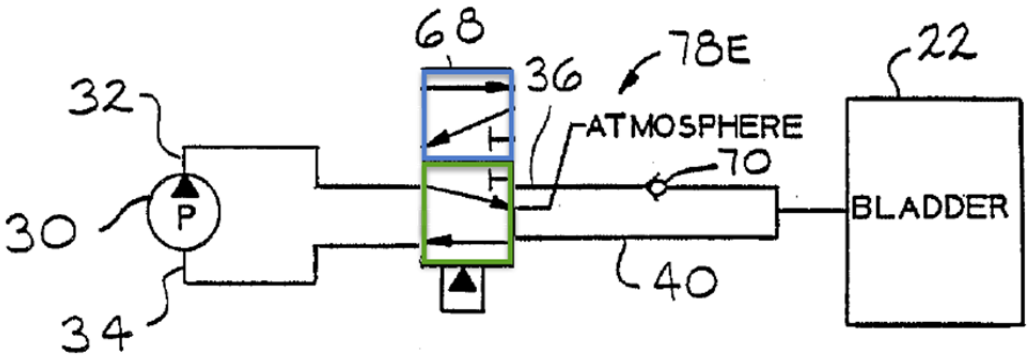

FIG. 12

(**Deflation**)

As of the Priority Date, POSAs considered these two categories of power inflate, ***power*** deflate pumps—i.e., Reversible Pump Assemblies and Uni-directional Pump Assemblies—to be interchangeable with each other (Decl., ¶87 [citing Ex. 1042]); however, POSAs also recognized the advantages of Uni-directional Pump Assemblies (e.g., Scott) over Reversible Pump Assemblies (e.g., Parienti)—namely, decreased **cost** and **weight**, and increased energy and spatial **efficiency**. Scott, 1:40-43 (Reversible Pump Assembly "is more expensive" and "less efficient" than a Uni-directional Pump Assembly), 1:43-45 ("Because [the Reversible Pump Assembly] is less efficient, a larger motor is required to produce the same amount of air pressure and volume flow" as a Uni-directional Pump Assembly), 1:54-56 ("It is a further advantage of the present invention, that the

pump efficiency of a one-directional pump is greater than the efficiency of a reversible pump."); Ex. 1040, 15 (noting that "the interior of the [uni-directional] pump can be maintained as simply as possible" because "reversal of the direction of rotation of the electric motor driving the pump is also not necessary"); Decl., ¶¶88-89.

c. Pump Layout

Initial automated pump designs were dispersed and made inefficient use of space. Decl., ¶90. In 1948, for example, Simpson disclosed a system including a motor 13 (orange), flywheel 12 (blue), and a pump 8 (red), connected to the motor 13 and flywheel 12 through connecting rod 11 and a reciprocating piston rod 10 for adjusting the pressure of a mattress pad, which as shown below, was spatially ineffient. Simpson (Ex. 1027), 1:38-47, Fig. 1; Decl., ¶91 (citing Exs. 1026, 1044, 1035, 1036 as additional examples).

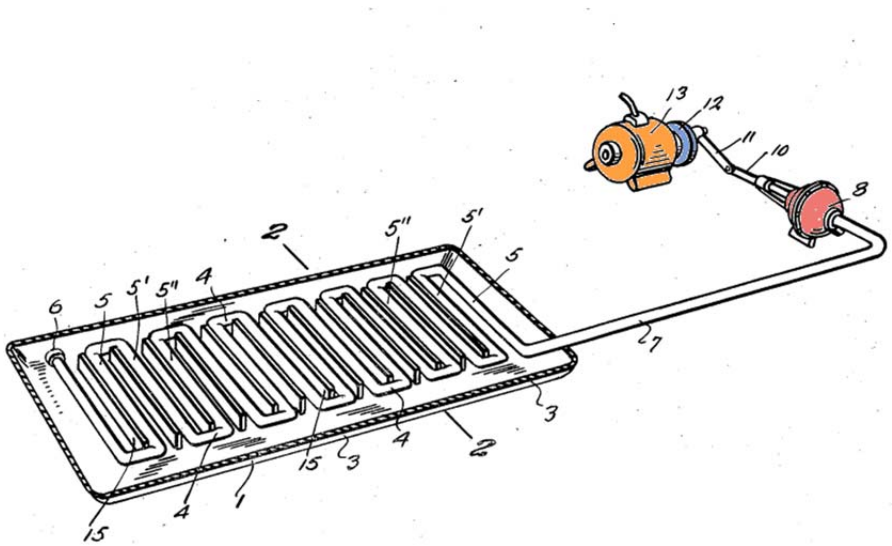

Recognizing the inefficiency of designs like Simpson's, prior art inventors began designing more **compact, space-efficient** pumps by containing the pump components in an enclosure or housing. Decl., ¶¶92-93; *see also, e.g.,* Ex. 1010, Figs. 20-31; Ex. 1030, Figs. 3B and 7; Ex. 1031, Figs. 1-7, 11; Ex. 1045, Figs. 1, 4-6; Ex. 1037, Figs. 8-9 (disclosing directional control valves and motorized pumps inside of a housing). Prior art inventors understood that the benefits of these designs included, for example, **ease of use and transportability** (Decl., ¶94 citing Ex. 1032), **decreased manufacturing and logistics costs** (Decl., ¶95), and increased **durability** (Decl., ¶96 citing Ex. 1006).

Prior art inventors also recognized the advantages of building pumps (for both automatic and manual pumps) into the body of the inflatable product. Decl., ¶97 (citing Exs. 1009, 1034, 1046-51) as additional examples of built-in pump designs not otherwise discussed, below); *see also* Ex. 1023, Fig. 1.

First, prior art inventors appreciated that a pump built into the inflatable body was a more integrated, portable, convenient design. Ex. 1006, 1:19 (recognizing that "portability is desired" for inflatable devices); Ex. 1007, Fig. 6, 4:1-15 (explaining that "no outside unit is necessary" with a built-in design); *cf.* Ex. 1052, 1:38-40 (explaining that a non-built-in design meant that "owners must always carry the pump in order to inflate the air mattress"); Decl., ¶¶98-100. For

example, Parienti (Fig. 1, below) disclosed an air mattress pump that resulted in increased convenience by making its pump "interdependent with the mattress by means of gluing or any other means." Parienti (Ex. 1008), 1:24-26.

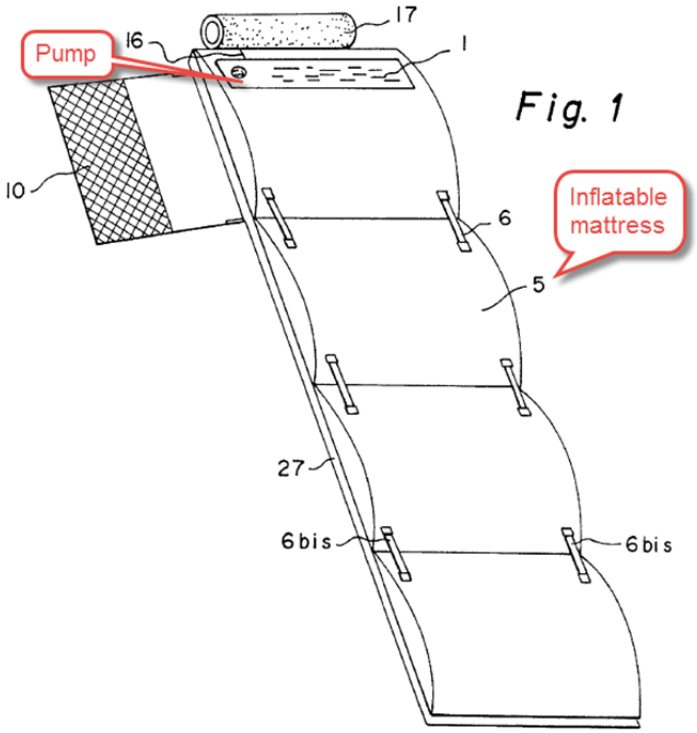

Second, prior art inventors recognized that building a pump in the inflatable body created a more compact design. Decl., ¶101. For example, Miller described his inflatable seat with a built in pump construction as "a compact design," which: (1) "facilitate[s] handling and shipment" of the inflatable product; and (2) "reduce[s] space requirements in the seat." Miller (Ex. 1013), 2:39-45; Decl., ¶102. Chaffee, too, recognized a need for compact designs, as "space is limited" in inflatable devices. Chaffee (Ex. 1006), 1:19. As a result, Chaffee disclosed a

built-in pump design, which "reduc[ed] the opportunity for the fluid controller 80 to impact or interfere with the use of inflatable device 10," such as using the inflatable mattress in "a standard sized bed frame." Chaffee, 4:50-62; *see also* Decl., ¶103.

Third, prior art inventors recognized that a pump built into the inflatable body better protected the pumps and, therefore, resulted in more durable products. Decl., ¶104-05; Ex. 1023, Fig. 1, 1:9-14, 2:123-132, 3:18-22; Ex. 1054, 1:29-31 (describing built-in air pumps as being "resistant to chemical and physical attack, especially to moisture and oxidation").

Fourth, prior art inventors recognized that built-in pump designs provided cost and marketability advantages, as well. Decl., ¶106. For example, Chen explained that a non-built-in design meant that "users must purchase separate pumping apparatuses in order to use" the mattress, which "increase[d] the overall cost of the air mattress and, thus, limit[ed] marketability." Chen (Ex. 1052), 1:34-38; *see also* Ex. 1006, 1:19; Ex. 1008, 1:24-25; Ex. 1007, Fig. 6, 4:1-15; Decl., ¶106.

B. <u>Relevant Design Considerations</u>

In view of the foregoing, a POSA designing an inflatable product with a pump as of the Priority Date would have followed a basic design process, focusing

on four (4) key features, and the POSA would have been well-aware of the general options available for each of those four design features, as summarized in the following table. Decl., ¶107.

Design Feature	Option #1	Option #2	Option #3
1. Pump power	Manual	Motorized	--
2. Pump layout	Components uncontained	Components partially contained in housing	Components contained in housing
3. Pump location	External to inflatable body	Built into inflatable body	Built into inflatable body and recessed
4. Inflatable product flow control	Power inflate, vent deflate	Power inflate, power deflate via Reversible Pump Assembly	Power inflate, power deflate via Uni-directional Pump Assembly

Table 1: Basic Design Table

Decl., ¶107.

Additionally, as described in Sections V.A.1-2, above, a POSA also would have considered five (5) key design factors for each of the above design options:

- **Efficiency (of time and labor)**: A POSA would have sought to design an inflatable product with a pump that can function quickly and with minimal effort from the user.
- **Spatial effiency**: A POSA would have sought to design a compact pump and a compact assembly of the pump with the inflatable product.

- **Durability**: A POSA would have sought to make a durable pump and also a durable assembly of the pump and the inflatable body in order to create a quality, lasting product.
- **Cost**: A POSA would have sought to minimize costs as much as possible but still maintain desired quality and functionality.
- **Weight**: A POSA would have sought to minimize the weight of the pump and inflatable product as much as possible, thereby promoting a compact design and potentially decreases some costs (e.g., shipping costs).

Decl., ¶¶108-09 (citing *id.*, ¶¶52-60, 62-67, 73, 88-89, 91-96, 98-106). A POSA would have considered and weighed each of the foregoing factors when considering the pros and cons of each design option set forth in Table 1, above. *Id.*, ¶110.

C. The Challenged Claims

Applying the Challenged Claims to the Basic Design Table (Table 1), above, the Challenged Claims generally cover the following design options (highlighted):

Design Feature	Option #1	Option #2	Option #3
1. Pump power	Manual	Motorized (Claims 1-12, 16-23)	--
2. Pump layout	Components uncontained	Components partially contained in	Components contained in housing

		housing (Claims 1-11, 16-22)	(Claims 12 and 23)
3. Pump location	External to inflatable body	Built into inflatable body (Claims 1-12, 16-23)	Built into inflatable body and recessed
4. Inflatable product flow control	Power inflate, vent deflate	Power inflate, power deflate via Reversible Pump Assembly	Power inflate, power deflate via Uni-directional Pump Assembly (Claims 1-12, 16-23)

Table 2: '394 Patent Table

Decl., ¶111.

VI. PRECISE RELIEF REQUESTED

A. Claims and Statutory Grounds

Petitioner respectfully requests cancellation of the Challenged Claims as obvious under 35 U.S.C. § 103 based on the following grounds:

Ground	Claims	Basis	References
1	Challenged Claims	§ 103	Wu + Chaffee
2	Challenged Claims	§ 103	Wu + Goldsmith
3	Challenged Claims	§ 103	Wu + Parienti
4	Challenged Claims	§ 103	Wu + Goldsmith + Chaffee

Decl., ¶171.

B. Claim Construction

A claim in an unexpired patent in IPR receives its broadest reasonable interpretation ("BRI") in light of the specification. 37 C.F.R. § 42.100(b). "The [BRI] of a claim term may be the same as ***or broader than*** the construction of a

term under the *Phillips* standard." *In re CSB-Sys. Int'l, Inc.*, 832 F.3d 1335, 1341 (Fed. Cir. 2016) (citation omitted) (emphasis added). Petitioners apply this standard to all claim limitations in the Challenged Claims, and propose specific constructions for "inflatable body," "fan," and "pipe," as discussed below.

1. *"inflatable body"*

The BRI of "inflatable body" is "a structure that expands when filled with air or other gases." Decl., ¶¶143-45.

a. <u>The District Court's Improper Construction</u>

In the Litigation, the district court construed inflatable body to include a "substantially airtight" requirement by relying on the prosecution history of an unrelated patent, U.S. Patent No. 9,211,018, as intrinsic evidence. Ex. 1072, 9-14. This is contrary to well-established law that "statements made during prosecution of [an] unrelated [] patent cannot be used to interpret claims" of a patent. *Pfizer, Inc. v. Ranbaxy Labs. Ltd.*, 457 F.3d 1284, 1290 (Fed. Cir. 2006). And, the pertinent evidence (described below) undermines such a narrow construction of inflatable body in the '394 Patent.

Therefore, the Board should reject the district court's construction and adopt Petitioners' proposed BRI construction in this proceeding. *See CSB-Sys.*, 832 F.3d

at 1341; *In re Trans TEXHoldings Corp.*, 498 F.3d 1290, 1301 (Fed. Cir. 2007) ("the Board [is] not bound by the district court's claim construction").

b. Intrinsic Evidence

The '394 Patent's claims and specification lack any requirement that the inflatable body be substantially airtight. *See, e.g.,* Ex. 1001, Claims 1-3, 9, 11, 13, 14, 16-18, 22; Decl., ¶¶146-47.

The '394 Patent describes inflatable bodies with "built-in" pump structures, which are described, for example, as being "mounted on" the inflatable body. *See, e.g.,* Ex. 1001, 3:17, Figs. 1A, 4A; Decl., ¶148. Referring to Figure 1A, below, without these pump structures 11, 12—which are not themselves inflatable—the inflatable body is left with a gaping hole. *See, e.g.,* Ex. 1001, Figs. 1A, 4A; Decl., ¶148. That is, the pump structure *must* be mounted on the inflatable body in a manner that allows air to flow through the pump and into the inflatable body, which occurs through a hole, or opening, in the inflatable body itself. *See id.* Therefore, because the "inflatable body" itself *must* always include a hole or opening that communicates with the pump structure, it cannot be "substantially airtight." *Id.*, ¶¶148-49.

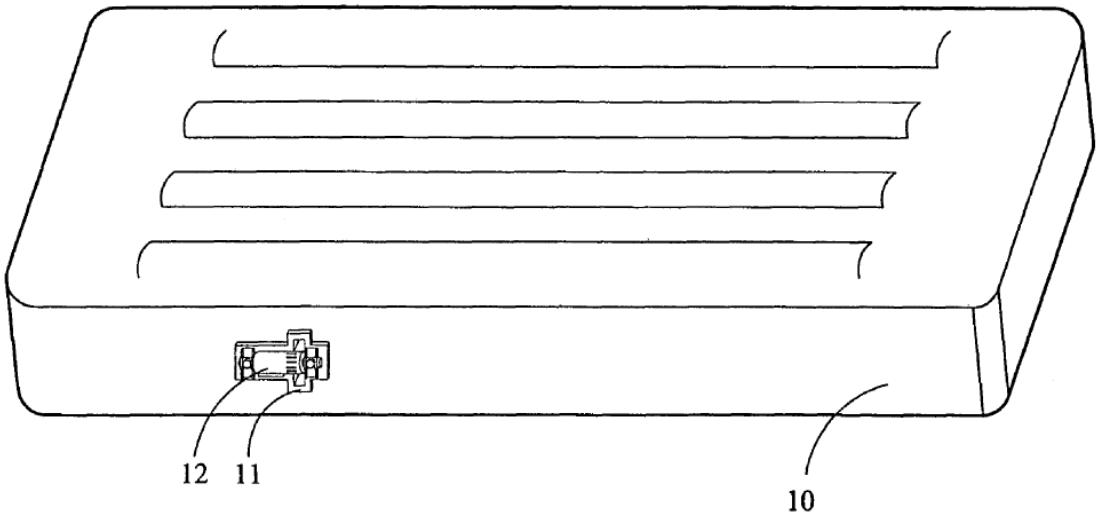

FIG. 1A

Further, prior art references cited during prosecution of the '829 Application further undermine the notion that inflatable body is a "substantially airtight" structure. *Powell v. Home Depot U.S.A., Inc.*, 663 F.3d 1221, 1231 (Fed. Cir. 2011) (citation omitted) ("[P]rior art cited in a patent or cited in the prosecution history of the patent constitutes intrinsic evidence."). For example, Wortman describes prior art mattresses including "air chambers" that are "***inflated*** and deflated to relieve excess pressure on patients," and explains that these inflatable chambers have "[m]icro vents . . . to produce a gentle flow of air beneath the patient." *See* Wortman (Ex. 1053), 1:8-53 (emphasis added); *id.* at 6:26-50; Decl., ¶¶150-51.

c. Extrinsic Evidence

Extrinsic evidence, including dictionary definitions, confirms that the BRI of "inflatable body" lacks a "substantially airtight" requirement. *See, e.g.,* Ex. 1059 (defining "inflated" as "open and enlarged" or "[f]illed or distended with air or gas"); Ex. 1060; Decl., ¶¶153-58 (discussing prior art use of "inflatable body" consistent with Petitioner's construction, Exs. 1005, 1053, 1055, 1056, 1057, 1058).

2. *"fan"*

The BRI of "fan" is "a device that alters air pressure through rotation." Decl., ¶¶159-65. The '394 Patent intrinsic evidence supports this construction. In particular, the specification describes a "fan (air pressure rotator) 155 eccentrically received in the reservoir 151, and a motor 154 provided outside the reservoir 151 to rotate the fan 155." Ex. 1001, 8:3-6, 8:8-13; Decl., ¶162. By parenthetically describing the fan as an "air pressure rotator," Patent Owner confirmed the proper meaning of "fan." *See, e.g., SkinMedica, Inc. v. Histogen Inc.*, 727 F.3d 1187, 1199-1202 (Fed. Cir. 2013) (construing a term based on a parenthetical description used in the specification). The specification also describes the "fan" as part of an assembly for "pumping air," and that this system does so through rotation. Ex. 1001, Abstract, 4:13-38, 6:63-7-19, Fig. 10B; Decl. ¶¶161-64. The claims are

consistent with this construction. Ex. 1001, Claims 1, 7-13, 15-16, 22-23 (claiming a fan that moves air by altering air pressure); Decl. ¶160.

Relevant extrinsic evidence also supports this BRI construction. *See* Ex. 1061, 3 (defining "fan" as "any device used to set up a current of air for ventilating or cooling"). Thus, Petitioners' BRI construction should be adopted.

3. *"pipe"*

The BRI of "pipe" is "a hollow body for conveying air or other gases." Without restricting the size or shape of the "pipe," the claims of the '394 Patent merely recite, for example, a "pipe" that "convey[s] air pumped by the fan and motor assembly." Ex. 1001, Claims 13, 16, 19. The specification is consistent, as it explains that air flows through and is conveyed by the pipe, and that the pipe can have various configurations. *Id.*, 3:61-67, 4:35-38, Figs. 2C, 3A; Decl., ¶¶167-68. The extrinsic evidence also supports Petitioners' BRI construction. In particular, Patent Owner's proposed dictionary definition during the Litigation required a "pipe" to be a "***hollow body*** for conducting a liquid." Ex. 1062, 7 (emphasis added). Thus, the intrinsic and extrinsic evidence are consistent with Petitioners' BRI construction for the term "pipe."

Although not bound by the district court's construction (*see TEXHoldings*, 498 F.3d at 1301), at the very least, the BRI of "pipe" is "a tubular or cylindrical

object, part, or passage," as construed by the district court. Ex. 1072, 14-16; *CSB-Sys.*, 832 F.3d at 1341; Decl., ¶¶166-70.

VII. RELIEF REQUESTED

As set forth in Grounds 1-4, below, the Challenged Claims are obvious in view of Wu combined with Chaffee, Goldsmith, or Parienti. Wu generally disclosed a Uni-directional Pump Assembly that satisfied most of the limitations in the Challenged Claims. While Wu's pump assembly was not enclosed in a housing or built into its inflatable body, these requirements were well-known in the art as of the Priority Date, as demonstrated by Chaffee, Goldsmith, or Parienti, and other prior art references. Thus, a POSA would have been motivated to contain Wu's Uni-directional Pump Assembly in a housing and build that housing into an inflatable body, rendering the Challenged Claims invalid as obvious. *See KSR Int'l Co. v. Teleflex Inc.*, 550 U.S. 398,420 (2007) ("any need or problem known in the field of endeavor at the time of invention and addressed by the patent can provide a reason for combining the elements in the manner claimed").

In an effort to comply with 37 C.F.R. § 42.104(b)(4), Petitioners have "specif[ied] where each element of the claim is found in the prior art patents or printed publications relied upon." However, to be clear, Petitioners are not arguing that the features of any "reference [should] be bodily incorporated into the

structure of the primary reference," as this is not the test for obviousness. *In re Keller*, 642 F.2d 413, 425 (CCPA 1981). Instead, Petitioners arguments are intended to convey "what the combined teachings of the references would have suggested to those of ordinary skill in the art." *Id.*; *see also In re Mouttet*, 686 F.3d 1322, 1332 (Fed. Cir. 2012).

As an initial matter, Wu (Ex. 1005) is prior art to the '394 Patent under 35 U.S.C. § 102(e), as Wu stems from Provisional App. No. 60/278,925 (the "Wu Provisional") (Ex. 1066), which was filed on March 26, 2001 and precedes the June 22, 2001 Priority Date. Decl., ¶117. Wu is entitled to this prior art date, as the Wu Provisional supports the claims that eventually issued in Wu, as shown in the following chart regarding claims 1 and 2 of Wu. *Dynamic Drinkware, LLC v. Nat'l Graphics, Inc.*, 800 F.3d 1375, 1378-79 (Fed. Cir. 2015); *see also* Decl., ¶¶118-19; Ex. 1067 (showing support for the remaining claims).[2]

[2] Wu is also analogous and non-cumulative. Wu relates to a system 10 for inflating and deflating an air mattress 400, which is the general subject matter of the Challenged Claims, and Wu was not considered during prosecution of the '394 Patent. Wu, Abstract; Wu Provisional, Abstract, 15:5-7; Decl., ¶¶120-21; *Unwired Planet, LLC v. Google Inc.*, 841 F.3d 995, 1000-01 (Fed. Cir. 2016).

Wu Claim Language	Wu Provisional
1. A system for controlling the flow of air from between an outside environment, a blower having an intake port and an exhaust port, and the chambers of a patient supporting low air loss mattress, comprising:	*See, e.g.,* 1:20-21, 2:26-30, 3:1-7, 3:18-20, 4:13-22, 4:28-31, 5:6-7, 5:24-26, 6:6-7, 7:11-15, 8:7-8, 8:26-30, 9:7-14, claims 1(preamble), 1(a), 1(b), 2(preamble), 2(a), 2(b), 2(g), Figures 1-2; Decl., ¶118.
a rotary valve having a housing and a gate member,	*See, e.g.,* 4:22-24, 7:16-21, 7:26-31, 8:3-15, claim 2(b), Figures 1-2; Decl., ¶118.
the housing including an inlet port communicating with the blower exhaust port, air mattress supply ports communicating with lines supplying the chambers of the air mattress and an outlet port communicating with the blower intake port, the housing rotatably receiving the gate member,	*See, e.g.,* 2:28-30, 3:3-4, 3:8-9, 4:19-25, 4:28-31, 5:1, 7:19-23, 8:8-9, 8:26-27, 9:8-11, claims 1(b), 2(b), 2(d), Figures 1-3; Decl., ¶118.
the gate member divided by a wall into a first portion and a second portion and further having a first port communicating the first portion with the outside environment, a second port communicating with the first portion and a third port communicating with the second portion,	*See, e.g.,* 7:29-31, 8:1-12, claims 1(b), 2(b), Figures 1-2; Decl., ¶118.
the gate member rotatable between a first position aligning the gate member second port with the valve housing outlet port and communicating the gate member second portion with the valve housing inlet port and the air mattress supply ports, thereby communicating the blower intake with the outside environment and communicating the blower exhaust with the air mattress supply ports,	*See, e.g.,* 3:4-7, 8:18-28, claims 1(b), 2(b), Figures 1-2; Decl., ¶118.
and a second position aligning the gate member third port with the valve housing outlet port and communicating the first portion of the	*See, e.g.,* 3:4-7, 7:11-15, 9:1-14, 12:25-31; 13:1-5, claim 2(b), Figures 1-2; Decl., ¶118.

Wu Claim Language	Wu Provisional
gate member with the valve housing inlet port and communicating the second portion of the gate member with the air mattress supply ports, thereby communicating the blower exhaust with the outside environment and communicating the blower intake with the air mattress supply ports to quickly deflate the air mattress.	
2. The system of claim 1, wherein the air mattress supply lines have electrically controlled valves for controlling the amount of air that can flow therethrough.	*See, e.g.,* 3:12-14, 4:30-31; 5:1-3, 5:8-9, 5:9-10, 5:17-19, 5:28-31; 6:1-2, 6:15-18, claims 1(b), 1(g), 2(e), 2(g), Figures 1-2; Decl., ¶118.

Referring to Figure 1, below, Wu is directed to "a system [10] for supplying air and controlling the flow of air into and out of the chambers of a patient supporting air mattress [400] [green]." Wu, Abstract. Wu's system includes a rotary valve 100 (orange) and an electric motor-driven blower 15 (blue). *Id.* at 2:44-47; *see also* Decl., ¶113; Wu Provisional, at 4:4-6, 15:5-6. A POSA would have understood this system to be a type of Uni-directional Pump Assembly. Decl., ¶113.

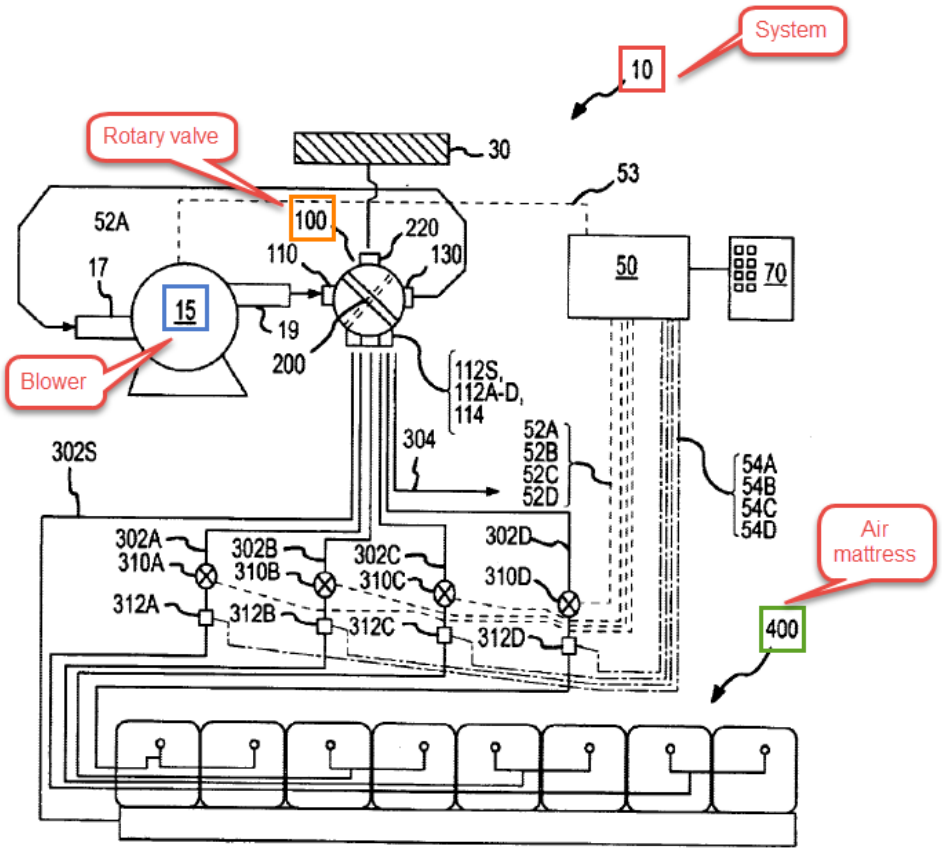

FIG. 1

Wu controls inflation and deflation of air mattress 400 using rotary valve 100, which includes a housing 101 and gate member 200 inside the housing 101, the gate member 200 having two positions. Decl., ¶114. As shown in Figure 2, below, in a first, inflating position, gate member 200 connects atmosphere port 220 to blower inlet port 130 and blower outlet port 110 to the various air mattress supply ports 112. Wu, 2:4-5; Decl., ¶¶114, 217-22. In a second, deflating position, gate member 200 connects the various air mattress supply ports 112 to

blower inlet port 130 and blower outlet port 110 to atmosphere port 220. Wu, 2:5-8; Decl., ¶¶114, 223-29. To assist the Board's understanding of Wu, true and accurate graphic animations have been created and included at Exhibits 1070 (Figure 1) and 1068 and 1069 (Figure 2). Decl., ¶115.

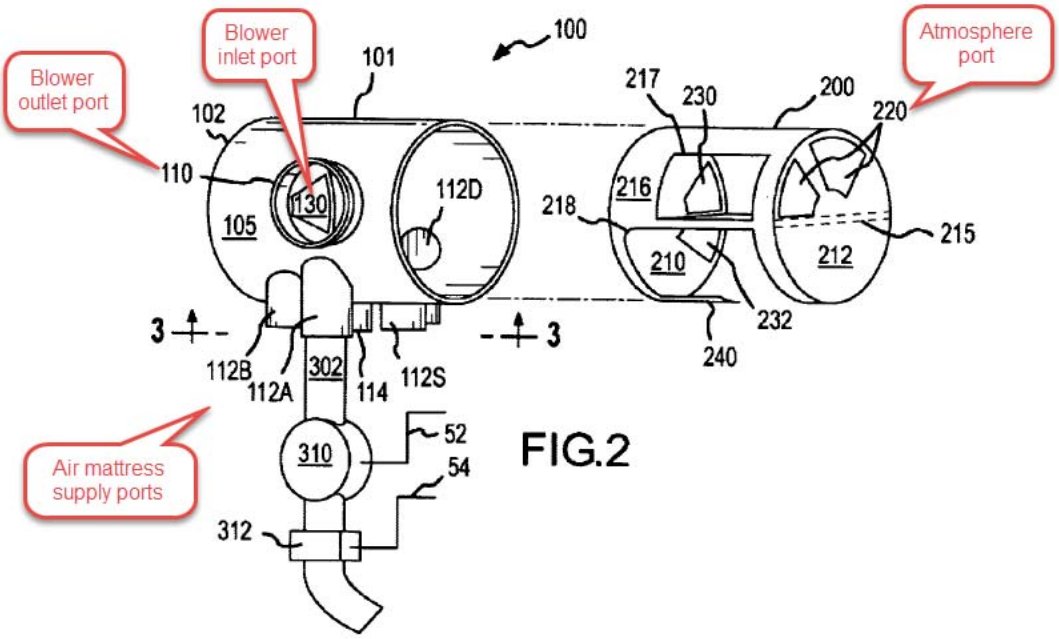

In short, Wu disclosed the following general design options (highlighted blue) from Table 1, above:

Design Feature	Option #1	Option #2	Option #3
1. Pump power	Manual	Motorized	--
2. Pump layout	Components uncontained	Components partially contained in housing	Components contained in housing

3. Pump location	External to inflatable body	Built into inflatable body	Built into inflatable body and recessed
4. Inflatable product flow control	Power inflate, vent deflate	Power inflate, power deflate via Reversible Pump Assembly	Power inflate, power deflate via Uni-directional Pump Assembly

Table 3-A: Wu Table

See Decl., ¶116.

Compared to the design options covered by the Challenged Claims (*see* Table 2, above), Wu lacks any teaching that its pump (e.g., blower 15 and rotary valve 100) is wholly contained in a housing and having that housing built into its inflatable body (highlighted in red, above). Decl., ¶¶172-74. However, other prior art disclosed these conventional, including Chaffee (Ground 1), Goldsmith (Ground 2), and/or Parienti (Ground 3). Decl., ¶¶175-76, 290-91, 316-17. A POSA would have been motivated to combine these references with Wu.

A. GROUND 1: The Challenged Claims are Obvious in View of Wu in combination with Chaffee

Wu in combination with Chaffee discloses and suggests to a POSA a Uni-directional Pump Assembly (from Wu) built into an inflatable body (from Chaffee) as claimed in the ’394 Patent. *See KSR*, 550 U.S. at 420; *Mouttet*, 686 F.3d at 1332; Decl., ¶¶172-76.

1. Claim 1

a. An inflatable product including:[3] an inflatable body;

Wu disclosed an air mattress 400 (an inflatable body). Decl., ¶180. Specifically, and referring to Figure 1, below, Wu disclosed a system 10 for "supplying air and controlling the flow of air into and out of the chambers of a patient supporting ***air mattress***" 400 (orange). Wu, Abstract (emphasis added), 2:44-62; 4:37-47; Wu Provisional, 4:4-16; 6:30-31; 7:1-3; 15:5-7.

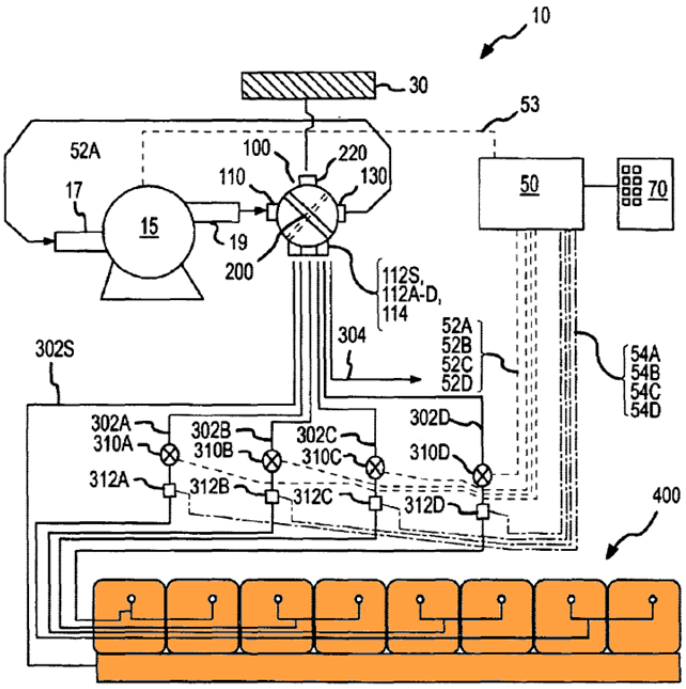

FIG.1

[3] The preamble is not a limitation. Even if it is, Wu disclosed an inflatable product in the form of an air mattress 400. Decl., ¶¶177-79.

Air mattress 400 is "a type of mattress having transverse air chambers arranged in zones." Wu, 4:1-2. A POSA would have understood air mattress 400 to be an inflatable body, as Wu consistently describes air mattress 400 as being a body that is "inflated" by system 10. *Id.*, Abstract, 3:10-13; 4:14-36; Wu Provisional, 4:28-30; 6:6-7, 15-29; 15:12-14; Decl., ¶181.

Air mattress 400 also includes "a large number of small holes in its upper surfaces to permit air to constantly circulate around a supported patient." Wu, 2:60-62. If the Board finds that "inflatable body" has a substantially airtight requirement and that the aforementioned "small holes" render Wu *not* substantially airtight, then Wu provides an alternative air mattress teaching that would satisfy this narrower construction, as Wu states that "system 10 is highly versatile and can be used to supply air to … [a] ***constant pressure mattress***." Wu, 4:44-47 (emphasis added). A POSA would have understood a "constant pressure air mattress" to be a substantially airtight structure that expands when filled with air, and that use of the system with this mattress would have been nothing more than a simple substitution of known elements to achieve a predictable result. Decl., ¶¶182-83; Wu Provisional, 4:15-16, 7:4-6.

Alternatively, if the Board finds that "inflatable body" has a substantially airtight requirement and that Wu's alternative "constant air pressure mattress" does

not satisfy this requirement, a POSA would have found it obvious in view of Chaffee's (described in greater detail, below) bladder 20. *See* Chaffee (Ex. 1006), 3:5 (disclosing a "substantially fluid impermeable bladder 20"); *id.* at 3:8-10, 3:32-42; 3:64; 4:23-26; Decl., ¶184. Because Wu explains that its system 10 is "highly versatile" and can be applied to "various types of air mattresses," a POSA would have found it obvious to use Wu's system 10 with a substantially airtight mattress, such as Chaffee's bladder 20, as this would have been nothing more than a simple substitution of known elements to achieve a predictable result. Wu, 4:44-47; *see also* Wu Provisional, 7:4-6; Decl., ¶184.

b. <u>a fan and motor assembly for pumping air;</u>

Wu disclosed "an electric motor powered variable speed blower" for "supplying air and controlling the flow of air into and out of the chambers of a patient supporting air mattress." Wu, Abstract. Wu describes blower (reference numeral 15) as "a centrifugal fan type blower." *Id.*, 2:56-57. Referring to Figure 1, below, blower 15 (orange) is schematically shown as part of system 10; the electric motor is not shown. *Id.*, 2:53-55; Decl., ¶¶185-86; Wu Provisional, 4:10-11, 13, 15:5-7.

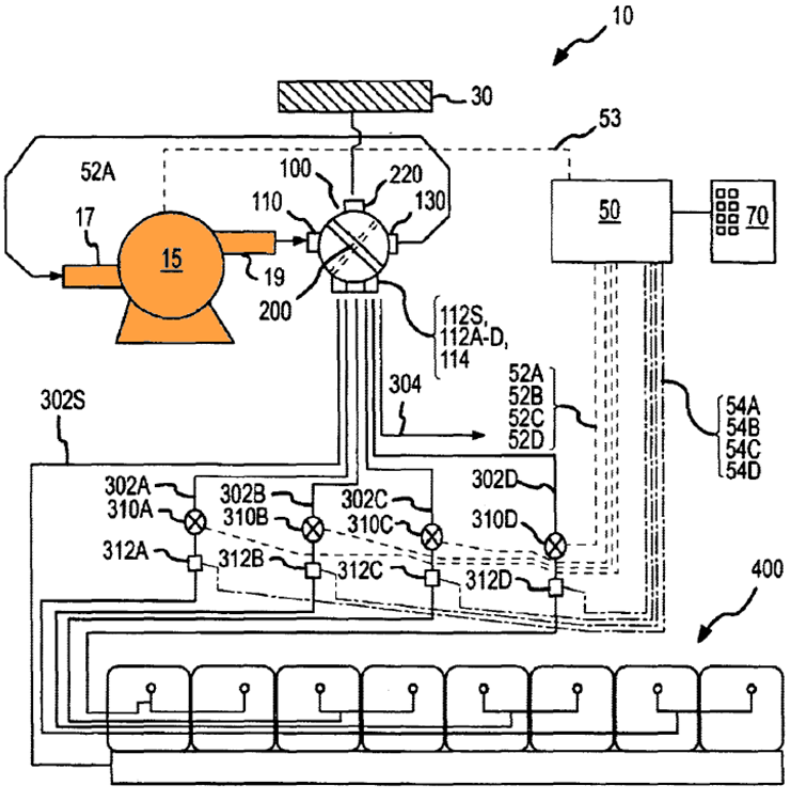

FIG.1

c. <u>a housing built into the inflatable body, the housing having an interior region;</u>

Wu did not disclose either feature of this limitation. However, Chaffee did, and a POSA would have been motivated to dispose Wu's rotary valve 100 (including its movable conduit 200) and blower 15 inside a housing in view of Chaffee's teachings. Decl., ¶¶187-88. Chaffee is briefly discussed, below.

Referring to Figure 1, below, Chaffee is directed to "an inflatable device [10] with a recessed fluid controller [80]." Chaffee (Ex. 1006), Abstract; Decl., ¶122.

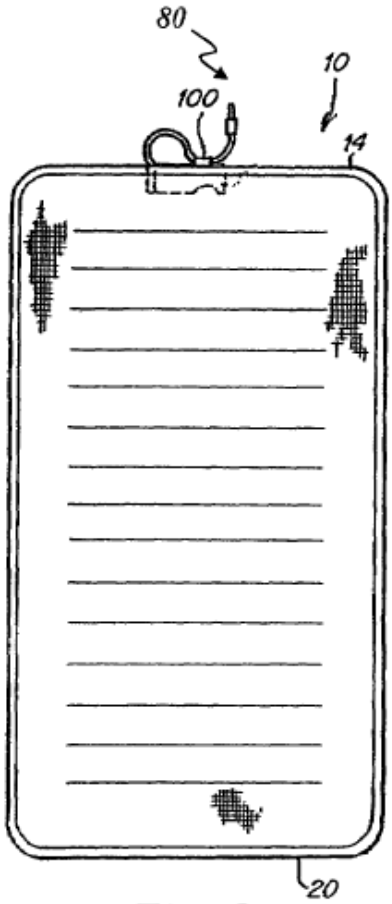

Fig. 2

Referring to Figure 5, below, Chaffee disclosed that fluid controller 80 includes a pump 81 and a "housing 90 [orange] that surrounds the inner workings of the pump." Chaffee, 4:13-19; Decl., ¶¶123-24. Housing 90 may include a flange 82 (also in orange), which includes a wall 83 (also in orange), that

"extend[s] from housing 90" and is "adapted to connect to bladder 20" of inflatable device 10. Chaffee, 5:4-11; Decl., ¶124.

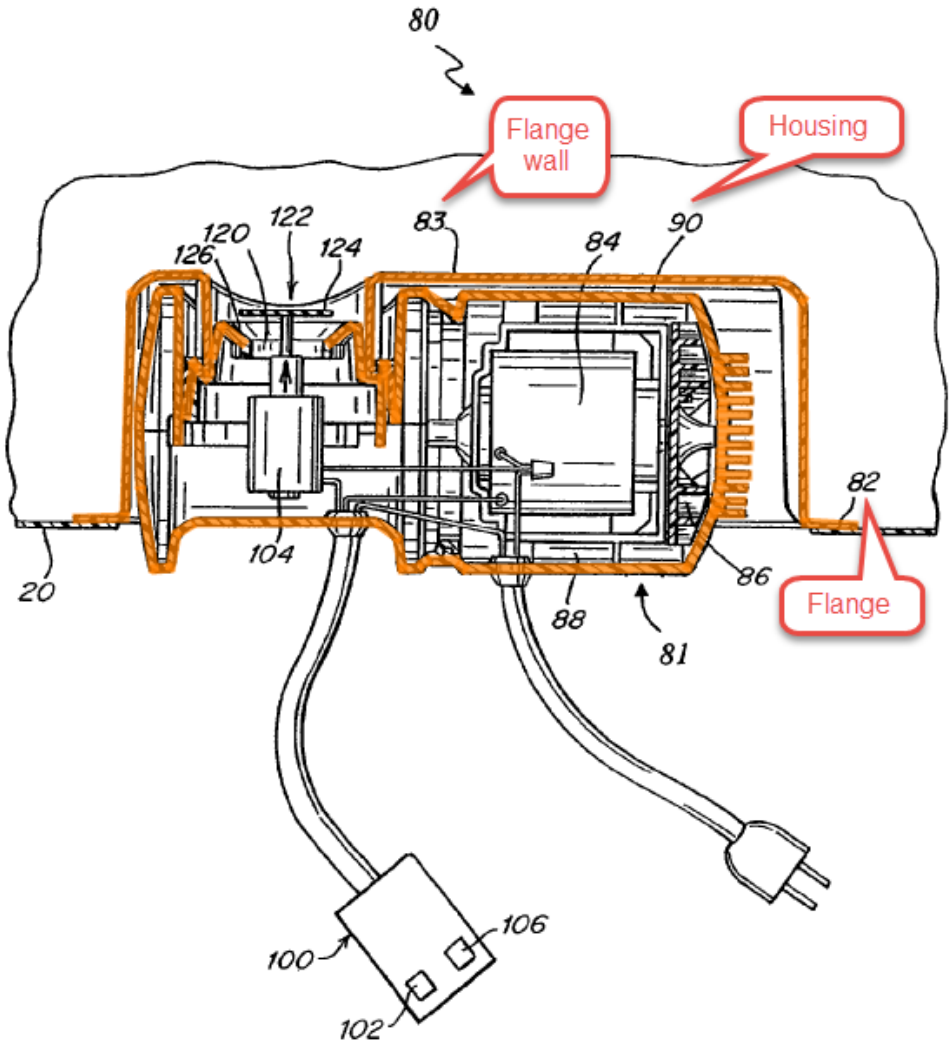

Fig. 5

See Chaffee, 4:15-17; 4:19-22. To be clear, flange 82 and flange wall 83 are part of the housing 90 (collectively "Chaffee's Housing") and, collectively, constitute the claimed "housing." *Id.*; Decl., ¶¶189-91, 200-02.

As of the Priority Date, a POSA would have been motivated by these teachings of Chaffee (described in more detail, below) to incorporate blower 15 and rotary valve 100 of Wu into a housing and build that housing into Wu's inflatable body. Decl., ¶188.[4]

The two features of this particular limitation are addressed in detail below.

(1) Housing having an interior region. Chaffee's Housing has an interior region that, referring to Fig. 5, below, "surrounds the inner workings of the pump [81]." Chaffee, 4:18-19.

[4] Chaffee is prior art under 35 U.S.C. § 102(e) as it stems from a nonprovisional application (Application No. 09/859,706) that was filed on May 17, 2001 (*see generally* Ex. 1006), which precedes the June 22, 2001 Priority Date of the '394 Patent. Decl., ¶126. Chaffee is also analogous and non-cumulative, as it relates to a fluid controller 80 for inflating and deflating a bladder 20, which is the general subject matter of the Challenged Claims, and Chaffee was not substantively considered or discussed during prosecution of the '394 Patent. Chaffee, Abstract; Ex. 1003; Decl., ¶¶127-28; *Unwired Planet*, 841 F.3d at 1000-01.

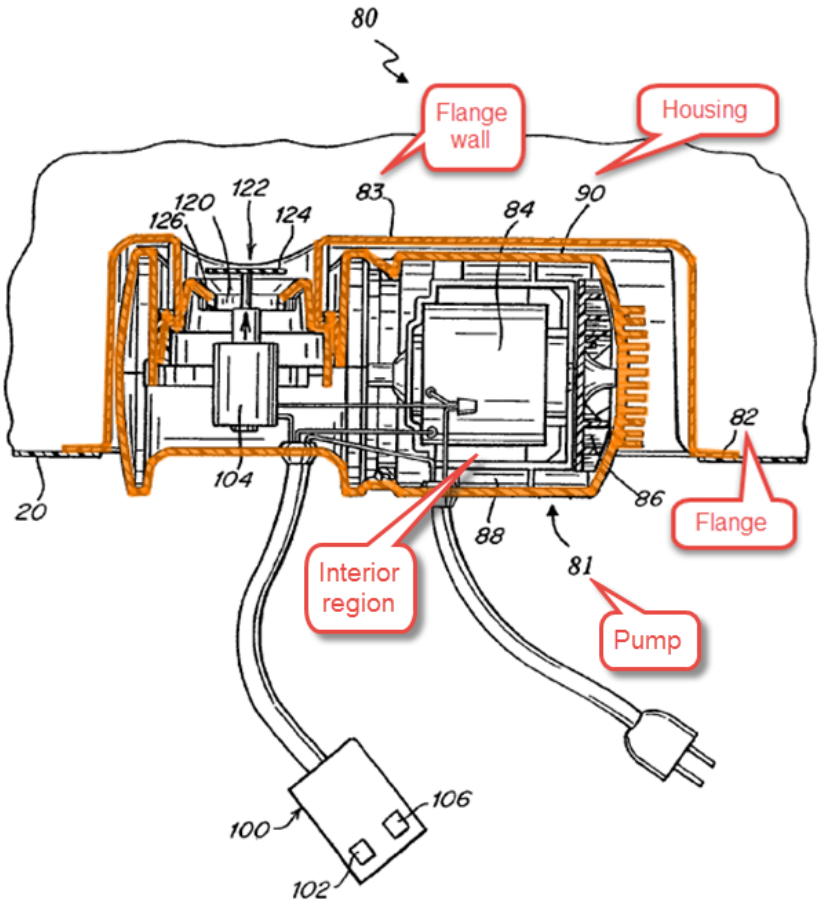

Fig. 5

As of the Priority Date, a POSA would have been motivated to dispose Wu's pump components—*i.e.*, rotary valve 100 and motorized blower 15—inside a housing (as taught by Chaffee) for at least the following reasons. Decl., ¶192.

First, a POSA would have understood that using a housing like Chaffee's would have provided better **spatial efficiency**. *See* § V.A-B, above; Decl., ¶193; *Dystar Textilfarben GmbH v. Patrick Co.*, 464 F.3d 1356, 1368 (Fed. Cir. 2006)

(recognizing a motivation to combine exists when the combination results in a product that "is stronger, cheaper, cleaner, faster, lighter, smaller, more durable, or more efficient."). Specifically, a housing would have "surround[ed] the inner workings" of Wu's system 10, thus providing a more compact, spatially efficient design. Chaffee, 4:18-19; Decl., ¶193.

Second, a POSA would have been motivated to dispose Wu's pump components within a housing because doing so would have provided better **durability**. *See* § V.A-B, above; Decl., ¶194; *see also Dystar*, 464 F.3d at 1368. Specifically, Chaffee taught that a housing served "to ***protect*** the inner workings of the pump" (Chaffee, 4:20 (emphasis added)), such as Wu's rotary valve 100 and blower 15, from damage or other harm—thus making it a more durable, longer-lasting structure. Decl., ¶194.

Third, a POSA would have recognized that containing Wu's pump components in a housing would have decreased manufacturing and logistics **costs**. *See* § V.A-B, above; Decl., ¶195; *Dystar*, 464 F.3d at 1368. Unitizing Wu's pump components in a housing as taught by Chaffee would have reduced the part count of the air pump assembly, which would have simplified handling during manufacturing and interfacing the air pump assembly with the air mattress, resulting, in turn, in reduced manufacturing and logistics costs. Decl., ¶195.

Fourth, Wu is silent regarding how its pump components (such as rotary valve 100 and blower 15) structurally interface with one another and with Wu's air mattress 400. Decl., ¶196. Therefore, to create a structurally sound design, a POSA would have looked to known options for providing that missing information, and containing these components in a compact housing like Chaffee's would have been one of a limited number of options, especially given the well-known desire for spatial efficiency. Decl., ¶196; *In re Haase*, 542 F. Appx. 962, 970 (Fed. Cir. Oct. 30, 2013) (finding a reference's silence to "highlight[] the potential benefits of th[e] combination").

Fifth, a POSA would have appreciated that containing Wu's pump components in a housing like Chaffee's was a well-known option from prior art pump designs that yielded nothing more than predictable results—a Uni-directional Pump Assembly contained in a housing. Decl., ¶197;[5] *KSR*, 550 U.S. at 416. In fact, less than a year after the Priority Date, Wu filed another patent application disclosing the pump components of Wu's system 10 contained inside of a housing. *See* U.S. Patent No. 6,832,629 to Wu (Ex. 1071), Fig. 1 (showing the pump components of Wu contained within a housing 11, 12); *Geo. M. Martin Co. v.*

[5] *See, e.g.,* Ex. 1010, Figs. 20-31; Ex. 1030, Fig. 3B and 7; Ex. 1031, Figs. 1-7, 11; Ex. 1045, Figs. 1, 4-6; Ex. 1037, Figs. 8-9.

Alliance Machine Sys., Int'l, LLC, 618 F.3d 1294, 1305 (Fed. Cir. 2010) ("Independently made, simultaneous inventions, made 'within a comparatively short space of time,' are persuasive evidence that the claimed apparatus 'was the product only of ordinary mechanical or engineering skill.'" (citation omitted)); Decl., ¶197.

(2) Housing built into the inflatable body. Chaffee's Housing is built into an inflatable body. Referring to Figures 2 and 5, below, Chaffee disclosed that fluid controller 80, through its Housing, is built into and recessed in inflatable bladder 20 [blue]. Decl., ¶198.

Figure 2	Figure 5
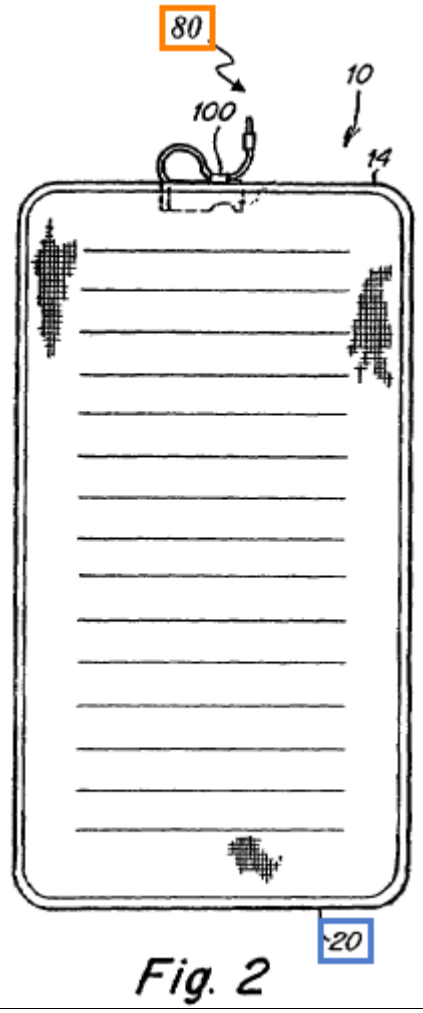 Fig. 2	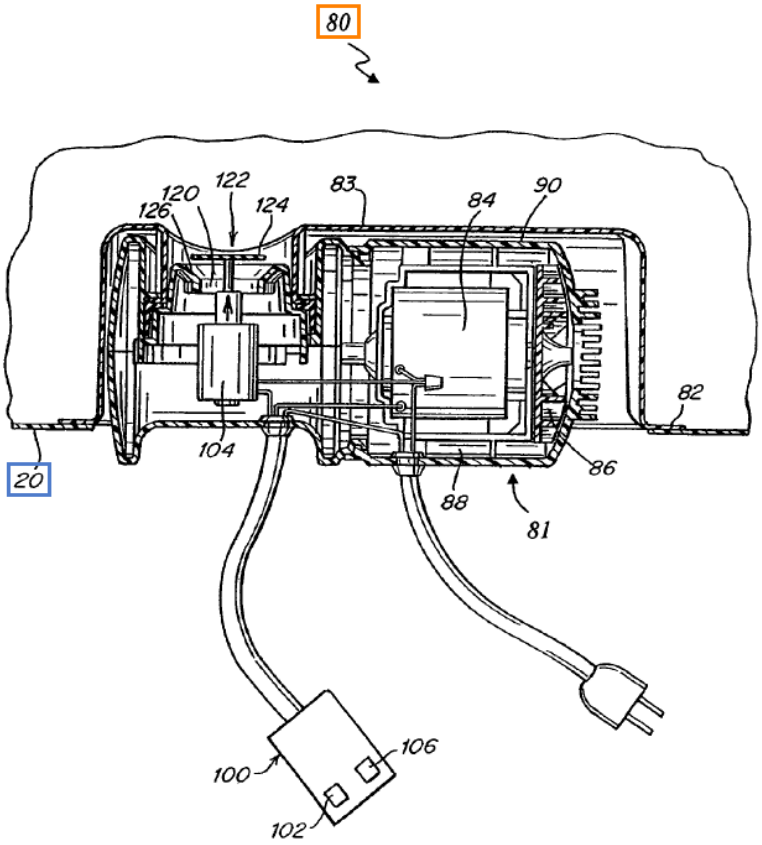 Fig. 5

In fact, Chaffee's stated goal was to improve upon the prior art by building the fluid controller in the inflatable body. *See* Chaffee, Abstract, 1:51-62; *compare id.* Fig. 1 *with* Fig. 2; Decl., ¶199. Referring to Figure 5, below, Chaffee's Housing, including flange 82 and flange wall 83, provided the "connection between fluid controller 80 and bladder 20." Chaffee, 4:21-22, 5:5-8, 7:37-38. In the figure, below, the connection point between Chaffee's Housing and bladder 20 is shown with blue circles. Decl., ¶200.

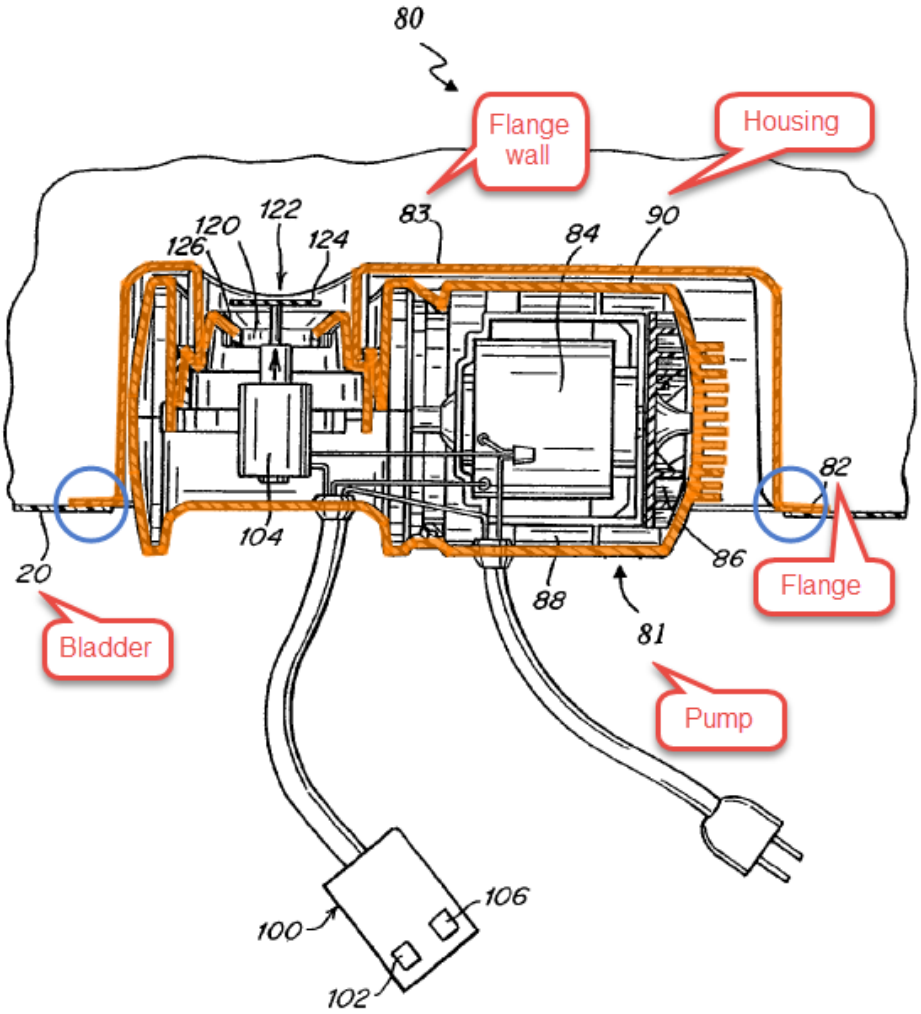

Fig. 5

Chaffee's Housing was connected to its bladder by, for example, "adhesive or heat seal" (Chaffee, 4:67-5:2, 5:26), which a POSA would have understood to be a built in connection between flange 82 and bladder 20. Decl., ¶201; Ex. 1072, 23-24 (citing "glued or welded" as examples of built in structures).

In short, Chaffee's Housing had an interior region and was built into an inflatable body. Decl., ¶202. In view of this disclosure, a POSA would have been motivated to contain Wu's pump components (e.g., blower 15 and rotary valve 100), in a housing (e.g., as taught by Chaffee's Housing), such that the housing was built into Wu's inflatable body (e.g., air mattress 400) for at least the following reasons. Decl., ¶203.

First, a POSA already had a reason to combine the pump components of Wu's system 10 with a housing, as described above in Section VII.A.1.c.(1). This would have resulted in the pump components of Wu's system 10 contained in a housing like Chaffee's, which was already built into an inflatable body. *See* Decl., ¶204.

Second, a POSA would have recognized the built in design to be more **time- and labor-efficient**, as it enhanced user convenience. *See* § V.A-B, above; Decl., ¶205; *Dystar*, 464 F.3d at 1368. Specifically, it was well-known that built-in designs like Chaffee's had been touted as eliminating the need for "owners [to] carry the pump in order to inflate the air mattress." Ex. 1052, 1:38-40; Ex. 1008, 1:25-26, Fig. 1; Ex. 1006 1:19; Ex. 1007, Fig. 6, 4:1-15; Decl., ¶205. Notably, the '394 Patent touts this same prior-art identified benefit of the built in design. *See* Ex. 1001, 1:25-28 (describing the built-in design as "eliminating the need for an

external pump"); *KSR*, 550 U.S. at 420 ("any need or problem known in the field of endeavor at the time of invention and addressed by the patent can provide a reason for combining the elements in the manner claimed").

Third, not only would placing Wu's pump components inside a housing have led to better **spatial efficiency**, increased **durability**, and improved **costs** and marketability for the reasons explained above in Section VII.A.1.c.(1), but these same key design factors would have been enhanced by then building that housing in the inflatable body. *See* § V.A-B, above; Decl., ¶206; *see also Dystar*, 464 F.3d at 1368 (recognizing a motivation to combine exists when the combination results in a product that "is stronger, ***cheaper***, cleaner, faster, lighter, ***smaller***, more ***durable***, or more ***efficient***" (emphases added)).

Regarding better **spatial efficiency**, this more compact design would have "reduc[ed] the opportunity for" the pump components of Wu's system 10 "to impact or interfere with the use of" air mattress 400. *See* § V.A-B, above; Chaffee, 4:50-56. As a result, air mattress 400 would have, for example, "fit into a standard sized bed frame." Chaffee, 4:56-59; Ex. 1013, 2:40-52; Decl., ¶207.

Regarding increased **durability**, POSAs recognized that built-in designs would protect the pump and its components "from accident, injury, or separation"

from the mattress. *See* § V.A-B, above; Ex. 1023, Fig. 1, 1:9-14, 2:123-132, 3:18-22; Ex. 1054, 1:29-31; Decl., ¶208.

Regarding improved **cost** and marketability, POSAs understood that built-in designs avoided the increased costs and lower desirability associated with separate pump systems, especially because a built in design meant users would not have to replace lost or misplaced pumps. *See* § V.A-B, above; Decl., ¶209.

Fourth, because Wu is silent about how its pump components structurally interfaced with air mattress 400, a POSA would have been motivated to look to the prior art to provide that teaching. *Haase*, 542 F. Appx. at 970. The built-in Housing design of Chaffee would have provided one such known interface design, and implementing it with the pump components of Wu's system 10 would have been well within a POSA's technical grasp. Decl., ¶¶210-211.

Fifth, a POSA would have recognized this design modification to be nothing more than an obvious combination of familiar elements using known methods to achieve a predictable result. *KSR*, 550 U.S. at 416. Specifically, a POSA knew that using a housing, like Chaffee's Housing, to build Wu's pump components into air mattress 400 was a well-known design option and would have predictably yielded an air mattress with a built-in pump. Decl., ¶212.

In short, Chaffee's Housing has an interior region that is built-into an air mattress. In light of this disclosure, and for at least all of the reasons provided above in this and the prior Section, a POSA would have been motivated to contain Wu's rotary valve 100 and blower 15 in a housing and build that housing into air mattress 400. Decl., ¶213.

> ***d.*** <u>an air conduit disposed at least in part in the housing, the air conduit being movable between a first position and a second position while remaining disposed at least in part in the housing, the fan and motor inflating the inflatable body when the air conduit is in the first position, and deflating the inflatable body when the air conduit is in the second position;</u>

Wu in combination with Chaffee disclosed all three of these features of this limitation. Decl., ¶214.

(1) Movable air conduit at least partially disposed in housing. Referring to Figure 2, below, Wu disclosed rotary valve 100, including movable gate member 200 (the air conduit) (orange), for "direct[ing] the flow of air" and thus controlling inflation and deflation of air mattress 400. Decl., ¶215; Wu, 2:3-8, 3:4-6; Exs. 1068-70; Wu Provisional, 3:4-7; 4:23-24.

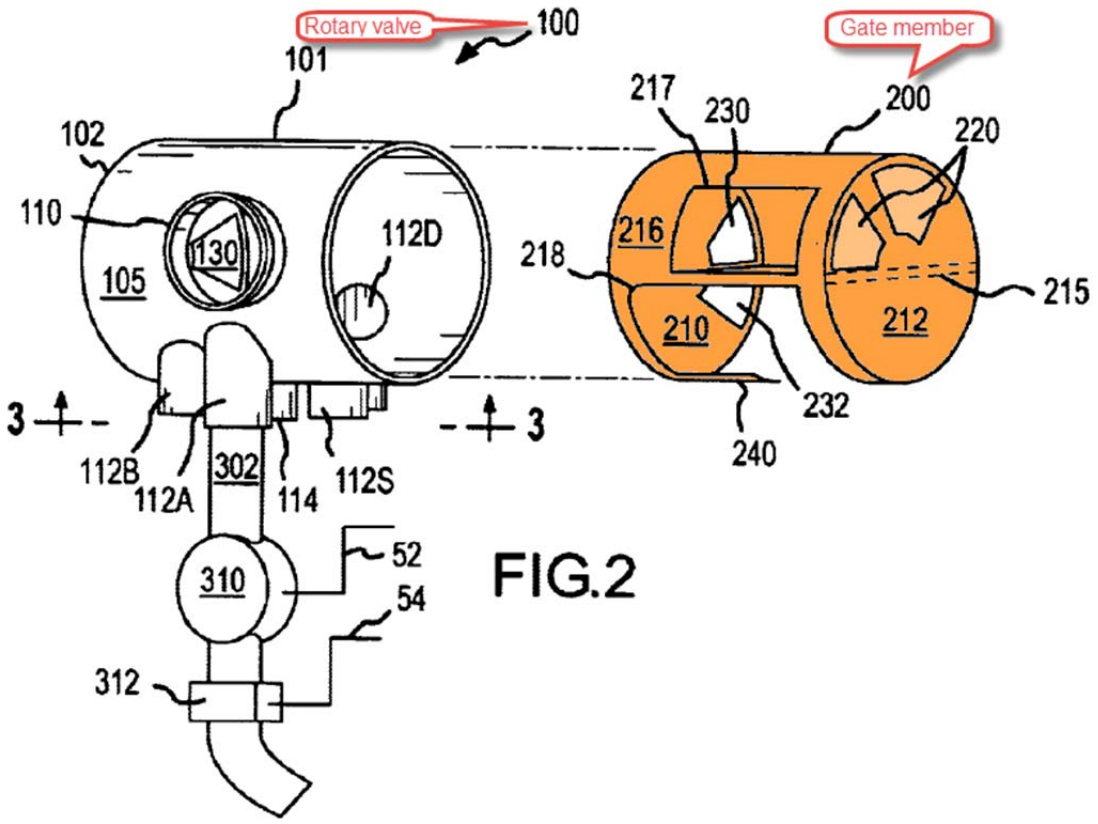

FIG.2

As explained above (Sections VII.A.1.c.(1)-(2)), in combination with Chaffee's Housing teachings, Wu's rotary valve 100, including gate member 200, would be contained in a housing. Thus, in combination with Chaffee, Wu's gate member 200 (the movable air conduit) is disposed in the housing. Decl., ¶216.

(2) Movable air conduit occupying a first position during inflation while at least partially disposed within the housing. Wu's gate member 200 (the air conduit) has a first position for inflation. Wu, 3:3-6; Decl., ¶217. And as explained above (Sections VII.A.1.c.(1)-(2)), in combination with Chaffee, Wu's rotary valve 100, including gate member 200, would be disposed within a housing,

such that gate member 200 is movable to a first position while remaining disposed at least in part in the housing. Decl., ¶217.

When "gate member 200 [orange] is in the first, pressurizing position, air [blue] from blower 15 is routed to air mattress 400 shown in FIG. 1, while outside air [blue] is drawn in through filter 30 shown in FIG. 1 and into the intake of blower 15." Wu, 5:67-6:4, Fig. 2; Exs. 1068, 1070; Wu Provisional, 4:22-24; 8:27-30; Decl., ¶¶218-22.

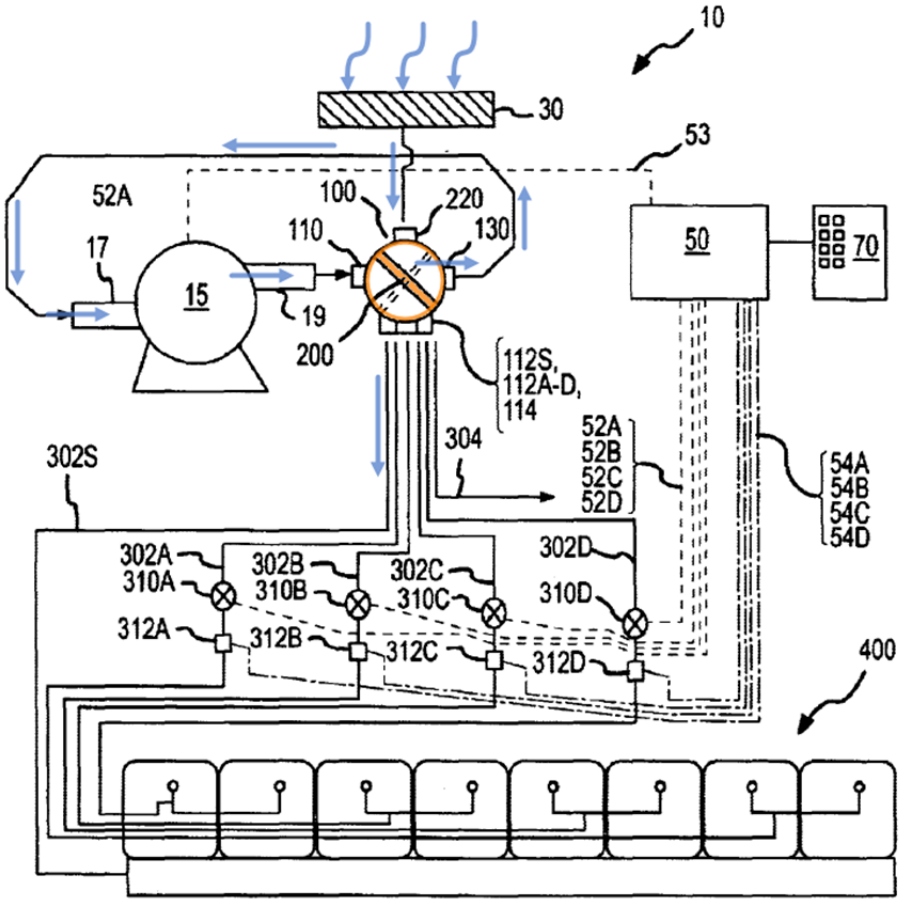

FIG.1

To assist the Board's understanding of Wu's operation when gate member 200 is in the first, inflating position, still images of the Ex. 1068 animation of Wu's Fig. 2 have been provided below to show the air flow (blue arrows) through the gate member 200 (shown in orange), which is inserted into housing 101 (shown in faded gray). As shown in the following images, and as described above, air flows through gate member 200 in three basic stages in inflation mode:

Stage 1 (time stamp 00:24)	
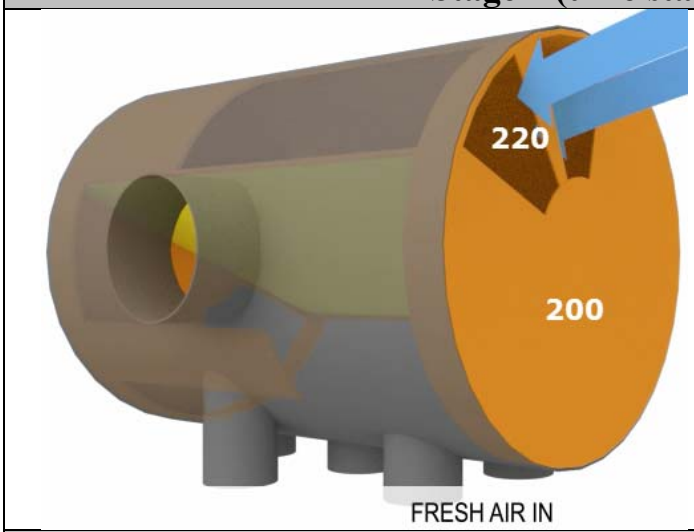	**Ambient air enters gate member 200 through port 220.** (Wu, 5:64-65, Fig. 2; Wu Provisional, 8:26-27, Fig. 2; Decl., ¶¶219-20)
Stage 2 (time stamp 00:27)	
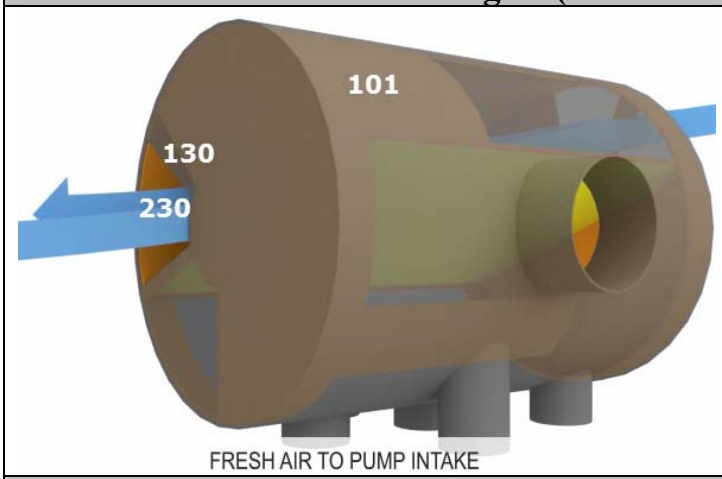	**Air then flows through opening 230 of gate member 200 and out port 130 of housing 101 to the inlet of blower 15 (not shown).** (Wu, 5:65-67, Fig. 2; Wu Provisional, 8:24-30, Fig. 2; Decl., ¶¶219, 221)
Stage 3 (time stamp 00:38)	
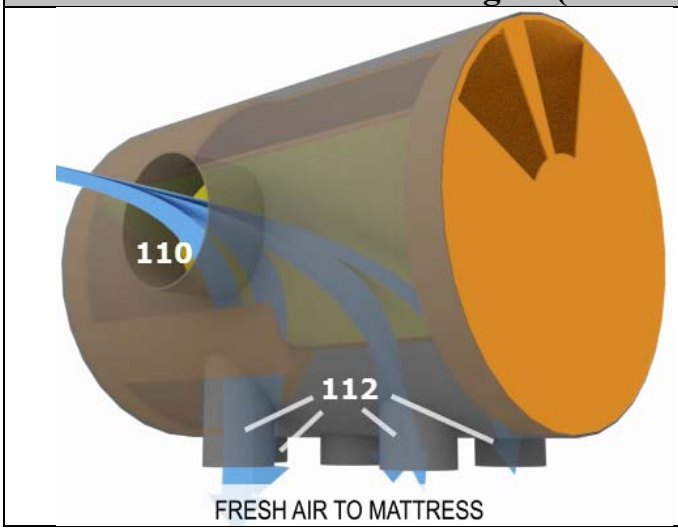	**From the outlet of blower 15 (not shown), air enters gate member 200 through port 110 and exits the 112 supply ports to air mattress 400 (not shown).** (Wu, 5:56-60, Fig. 2; Wu Provisional, 8:18-23, Fig. 2; Decl., ¶¶219, 222)

(3) Movable air conduit occupying a second position during deflation while at least partially disposed within the housing. Wu's air conduit/gate member 200 has a second position for deflation. Wu, 5:44-48; Decl., ¶223. And as explained above (Sections VII.A.1.c.(1)-(2)), in combination with Chaffee, Wu's rotary valve 100 (which includes this gate member 200) would remain disposed at least partially in the housing when gate member 200 is in the second position. Decl., ¶¶223-24.

This second position of gate member 200 (orange) is "shown in phantom in FIG. 1," which is reproduced in annotated form, below. Wu, 4:53. "When in the second position, gate member 200 directs air [blue arrows] from air mattress 400 into intake 17 of blower 15 while air leaving blower 15 is directed through filter 30 to the outside environment." *Id.*, 4:54-59, Fig. 2; Exs. 1069-70; Wu Provisional, 7:11-13; Decl., ¶¶224-29.

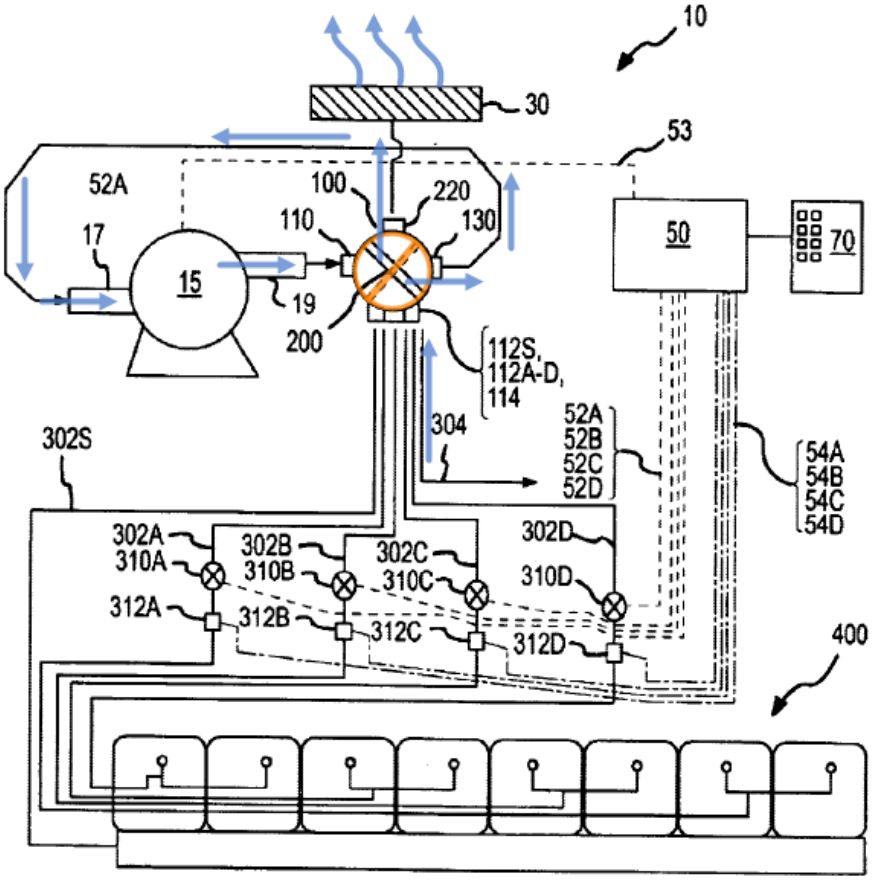

FIG.1

To assist the Board's understanding of Wu's operation when gate member 200 is in the second, deflating position, still images of the Ex. 1069 animation of Wu's Fig. 2 have been provided below to show the air flow (red arrows) through the gate member 200 (shown in orange), which is inserted into housing 101 (shown in faded gray). As shown in the following images, and as described above, air flows through gate member 200 in three basic stages in deflation mode:

Stage 1 (time stamp 00:01)	
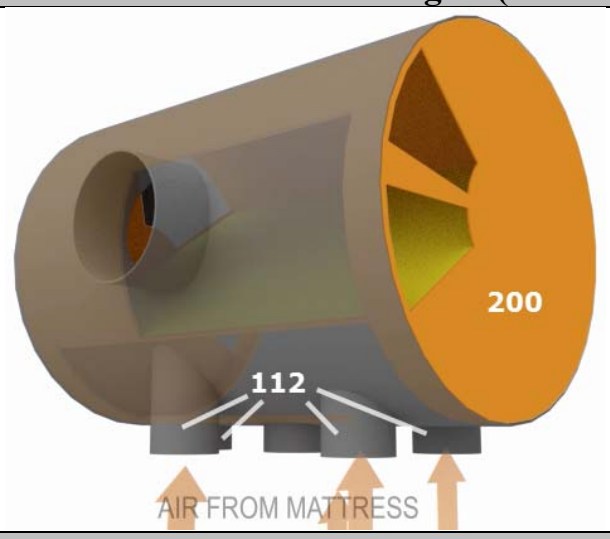	**Mattress air enters gate member 200 through 112 supply ports.** (Wu, 6:5-14, Fig. 2; Wu Provisional, 9:1-8, Fig. 2; Decl., ¶¶226-27)
Stage 2 (time stamp 00:07)	
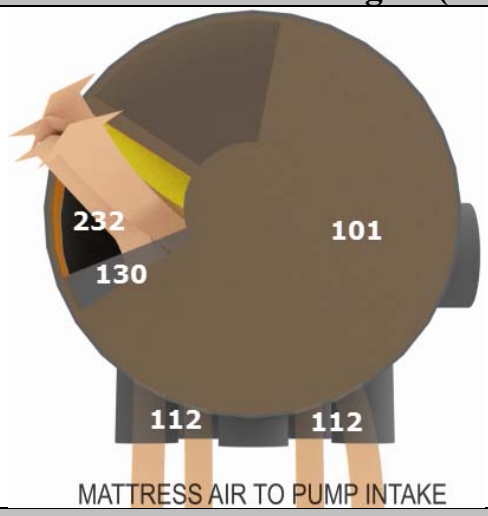	**Air then flows through opening 232 of gate member 200 and out port 130 of housing 101 to the inlet of blower 15 (not shown).** (Wu, 6:9-14, Fig. 2; Wu Provisional, 9:4-8, Fig. 2; Decl., ¶¶226-27)
Stage 3 (time stamp 00:16)	
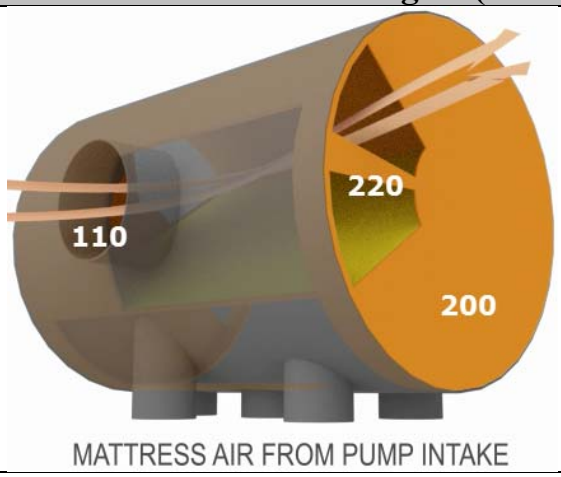	**From the outlet of blower 15 (not shown), air enters gate member 200 through port 110 and exits to ambient through port 220.** (Wu, 5:56-60, Fig. 2; Wu Provisional, 8:18-23, Fig. 2; Decl., ¶¶226, 228-29)

In short, Wu in combination with Chaffee disclosed this limitation, as a movable air conduit (Wu's gate member 200) is disposed at least in part in the housing (as taught by Chaffee) when the conduit occupies a first position for inflation and a second position for deflation. Decl., ¶230.

e. <u>wherein air flows between the interior region of the housing and the inflatable body during inflation and deflation.</u>

Wu in combination with Chaffee disclosed both features of this limitation.

(1) Air flow during inflation. As explained above (Sections VII.A.1.c(1) and d(2)), air flows through gate member 200 of Wu during inflation, and, when combined with Chaffee's teachings, this occurs within the interior region of the housing containing the pump components of Wu's system 10. Decl., ¶¶231-33; Wu, 5:56-6:4, Fig. 1; Wu Provisional, 8:18- 30; Fig. 1. Because air flows through gate member 200 during inflation and gate member 200 is disposed within the housing, air flows from the interior region of the housing into the air mattress 400 (the inflatable body) during inflation—i.e., between the interior region of the housing and the inflatable body. Decl., ¶¶231-33; Sections VII.A.1.c.-d.

(2) Air flow during deflation. As explained above (Sections VII.A.1.c.(1) and d.(3)), air flows through gate member 200 of Wu during deflation, and, when combined with Chaffee's teachings, this occurs within the interior region of the

housing. Decl., ¶234-35; Wu, 6:8-16; Wu, Fig. 1; s*ee also* Wu Provisional, 9:4-11; Fig. 1. Thus, because air flows through gate member 200 during deflation and gate member 200 is disposed within the housing, air flows from the inflatable body into the interior region of the housing during deflation—i.e., between the interior region of the housing and the inflatable body. Decl., ¶234-35; Sections VII.A.1.c.-d.

2. <u>Claim 2</u> – The inflatable product as claimed in claim 1, wherein air flows from the interior region of the housing into the inflatable body when the air conduit is in the first position. / <u>Claim 3</u> – The inflatable product as claimed in claim 1, wherein air flows from the inflatable body into the interior region of the housing when the air conduit is moved to the second position.

Dependent claims 2 and 3 merely claim inflation (claim 2) and deflation (claim 3) operations. Decl. ¶236-37. Wu in combination with Chaffee disclosed both of these limitations.

As explained above, air flows from gate member 200 of Wu to air mattress 400 during inflation and from air mattress 400 to gate member 200 during deflation, and this occurs when gate member 200 of Wu is disposed within the housing. *Id.*; Sections VII.A.1.c-e. Therefore, in combination, air flows from the interior region of the housing into Wu's air mattress 400 when gate member 200 is in the first, inflating position, and from air mattress 400 into the interior region of the housing when Wu's gate member 200 is in the second, deflating position. *Id.*

3. <u>Claim 4</u> – The inflatable product as claimed in claim 1, wherein the air conduit is a pipe. / <u>Claim 5</u> – The inflatable product as claimed in claim 4, wherein the pipe is rotatable. / <u>Claim 6</u> – The inflatable product as claimed in claim 4, wherein the pipe is a switching pipe.

Wu disclosed these limitations. As explained above (*see* Section VII.A.1.d.), Wu's gate member 200 is a movable air conduit. Decl., ¶¶238-42. A POSA would have also understood Wu's gate member 200 to be a pipe as required by Claim 4, regardless of the Board's construction of the term. *Id*. Further, Wu's gate member 200 is rotatable, as required by Claim 5, and constitutes a switching pipe, as required by Claim 6. Decl., ¶¶243-46.

Wu depicts and describes gate member 200 as a tubular or cylindrical object, part, or passage. Wu, 5:10-5:14 (referring to "circular" end walls 210 and 212 and "cylindrical" wall 216); *id.* 5:30, 5:35-36; Exs. 1068-69; Wu Provisional, 7:30-31; 8:1-3; 8:8-9. Therefore, under any reasonable construction of "pipe," Wu's gate member 200 is a pipe, as required by Claim 4. Decl., ¶¶238-42.

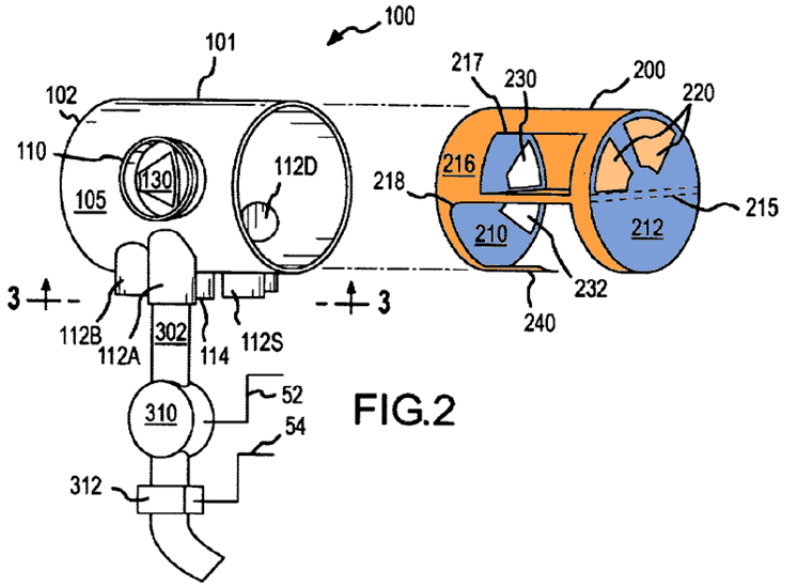

FIG.2

Wu also described gate member 200 as being rotatable (Claim 5) and a switching pipe (Claim 6). Decl., ¶¶243-46. Wu, 5:9-10 (describing gate member 200 "rotat[ing] within valve housing 101"), 6:5 (describing gate member 200 as being "turned" to a specific position), 4:53; Exs. 1068-69; Wu Provisional, 7:10, 29-30; 9:1. In other words, Wu described gate member 200 (the pipe, Claim 4) as switching, by rotation, between two positions for an inflate mode and a deflate mode (Claims 5 and 6). Therefore, Wu's gate member 200 is rotatable and constitutes a switching pipe. Decl., ¶¶243-46.

4. <u>Claim 7</u> – The inflatable product as claimed in claim 1, wherein the air conduit is arranged to convey air pumped by the fan and motor assembly.

Wu disclosed that its air conduit (gate member 200) is arranged to convey air pumped by its blower 15 (fan and motor), as required by Claim 7. As explained

above (Section VII.A.1.d.), Wu disclosed that gate member 200 (the air conduit) conveys air pumped by the motorized blower 15 (the fan and motor) in both the inflate mode and deflate mode. Decl., ¶247-49. For example, and referring to Figure 1, below, "[w]hen gate member 200 [orange] is in the first, pressurizing position, air [blue arrows] ***from blower 15*** is routed to air mattress 400 shown in FIG. 1, while outside air is drawn in through filter 30 shown in FIG. 1 and into the intake of blower 15." Wu, 5:67-6:4. On its way to air mattress 400, air passes through and is conveyed by gate member 200. *See id.*, Wu, 5:56-6:4, 5:44-48, 6:8-16; Wu Provisional, 8:13-23, 27-30; 9:4-12.

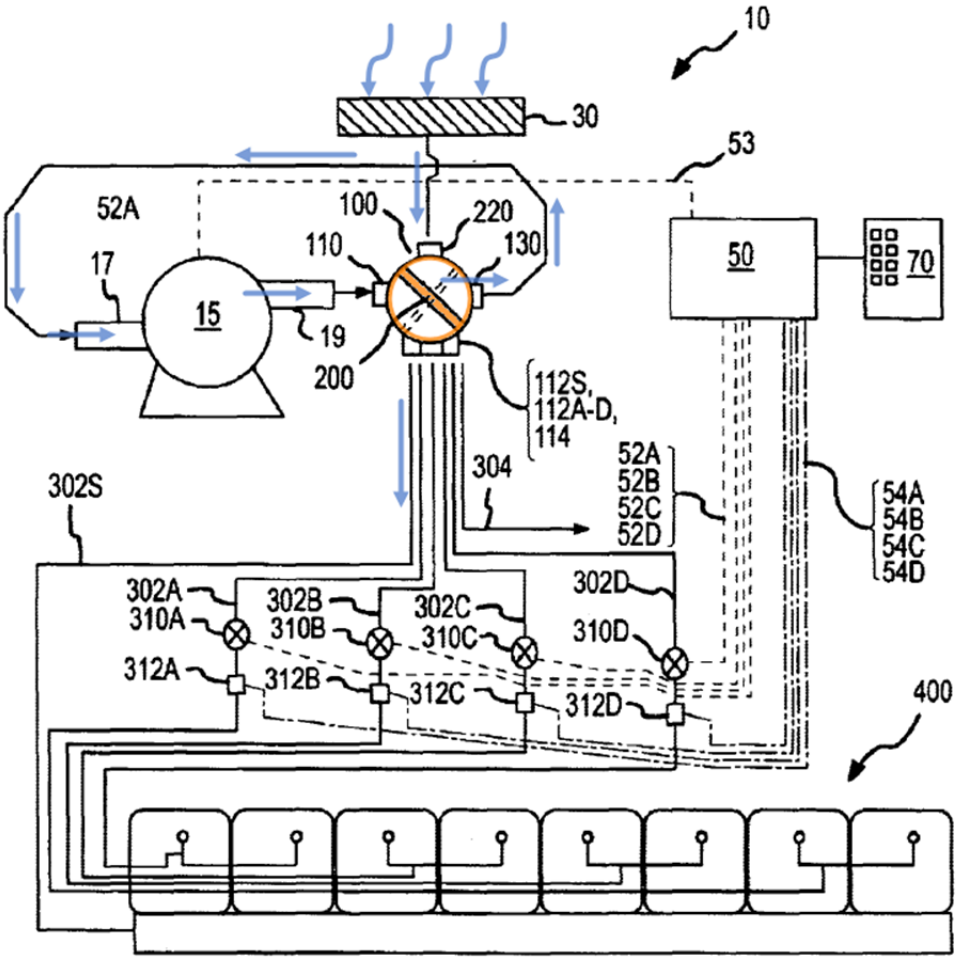

FIG.1

5. <u>Claim 8</u> – **The inflatable product as claimed in claim 7, wherein the air conduit has a first end and a second end, and wherein the fan and motor assembly causes air to be conveyed from the first end of the air conduit to the second end of the air conduit when the air conduit is in the first position. /** <u>**Claim 9**</u> **– The inflatable product as claimed in claim 8, wherein the fan and motor assembly causes air to be conveyed in sequence from ambient, through the first end of the air conduit, to the second**

end of the air conduit, and into the inflatable body when the air conduit is in the first position.

Wu disclosed these limitations of claims 8 and 9. Decl., ¶250-59.

First and Second Ends of the Air Conduit (Claims 8 and 9). Referring to Figure 2, below, Wu's gate member 200 (the air conduit) has two end walls 212 (the "first end," blue) and 210 (the "second end," green). Wu, 5:9-14, Fig. 2; Decl., ¶251; Wu Provisional, 7:30-31; 8:1-3.

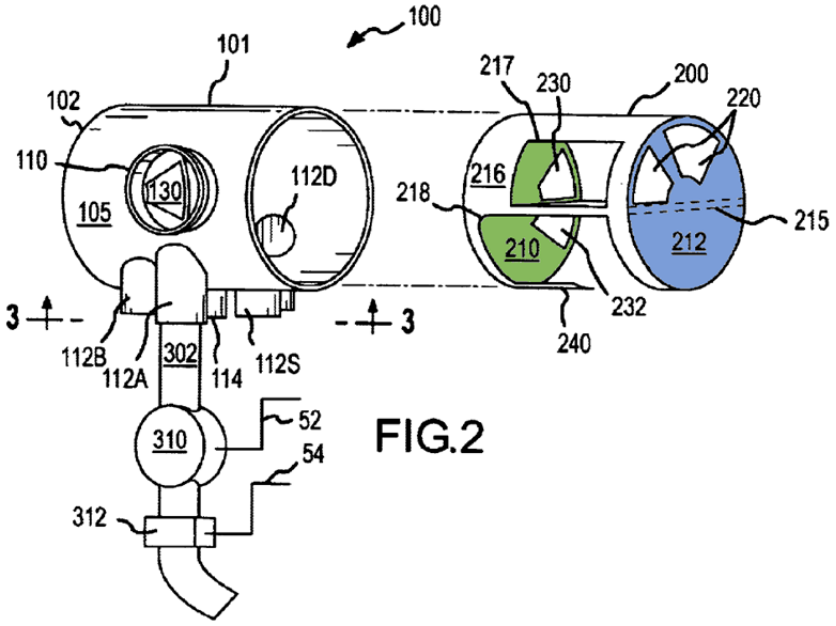

FIG.2

Conveying Air From Ambient (Claim 9). When the gate member 200 is in the first, inflating position, the blower 15 (the fan and motor) causes air to be conveyed in sequence starting from the ambient. Wu, 5:60-67 (describing motorized blower 15 as drawing in "outside air" when gate member 200 is in its first position); Decl., ¶¶255-56; Wu Provisional, 8:23-27.

Through the First End and Then the Second End of the Conduit (Claims 8 and 9). Motorized blower 15 then causes air to be conveyed "in second end wall 212 [i.e., the first end], into the first portion of gate member 200, through second port 230 [of end wall 210 (i.e., the second end)] of gate member 200"—i.e., from the first end 212 to the second end 210 of gate member 200. Wu, 5:60-67; Decl., ¶¶252-53, 257; Wu Provisional, 8:23-27.

Air Then Flows Into the Inflatable Body (Claim 9). The air then flows into the air mattress 400 (the inflatable body): "When gate member 200 is in the first, pressurizing position, air from blower 15 is routed to air mattress 400 shown in FIG. 1[.]" Wu, 5:67-6:4; Decl., ¶¶258-59; Wu Provisional, 8:27-30.

6. <u>Claim 10</u> – The inflatable product as claimed in claim 8, wherein the fan and motor assembly causes air to be conveyed from the second end of the air conduit to the first end of the air conduit when the air conduit is in the second position. / <u>Claim 11</u> – The inflatable product as claimed in claim 10, wherein the fan and motor assembly causes air to be conveyed in sequence from the inflatable body, through the second end of the air conduit, to the first end of the air conduit, to ambient when the air conduit is in the second position.

Wu disclosed these limitations of claims 10 and 11. Decl., ¶¶260-69.

Conveying Air From The Inflatable Body (Claim 11). When the gate member 200 is in the second position, the blower 15 causes "air [to be] drawn out

of air mattress 400 … causing air mattress 400 to quickly deflate." Wu, 6:18-22; Decl., ¶¶265-66; Wu Provisional, 9:12-14.

Through the Second End and then the First End of the Conduit (Claims 10 and 11). Referring to Figure 2, below, Wu disclosed that when gate member 200 is in the second position, "air is pulled … through third port 232 [of second end 210], then through outlet port 130 of housing 101 and into the intake of blower 15." Wu, 6:10-14. Then, "blower exhaust air passes through inlet port 110 of housing 101 and out through first ports 220 [of first end 212]." *Id.*, 6:14-18; Decl., ¶¶260-63, 267; Wu Provisional, 9:4-11.

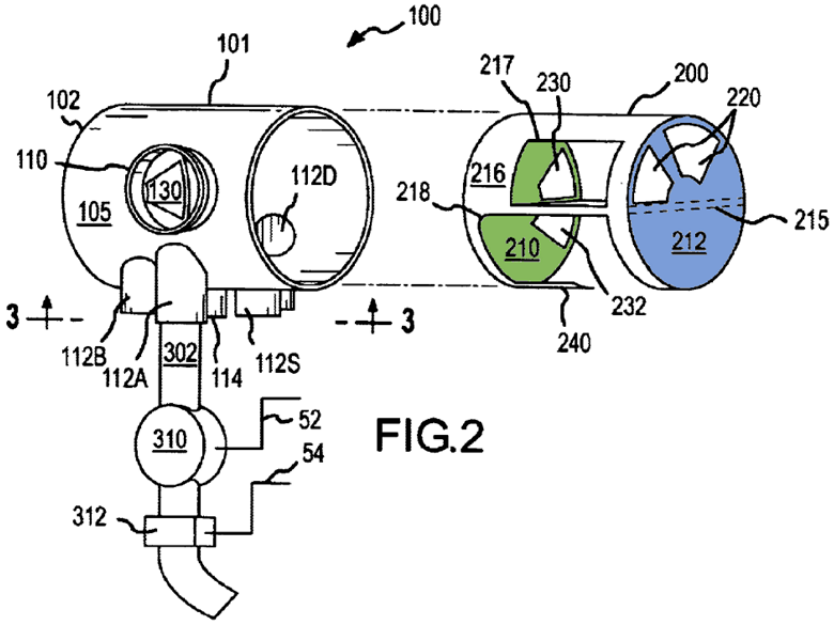

FIG.2

Air Then Flows to Ambient (Claim 11). Wu disclosed that air then flows "into the outside environment (while second port 230 is blocked by base wall 102

of housing 101)." Wu, 6:14-18; *id.* at 6:18-22; Decl., ¶¶268-69; Wu Provisional, 9:8-14.

7. <u>Claim 12</u> – The inflatable product as claimed in claim 1, wherein the fan and motor are received in the housing.

Wu in combination with Chaffee disclosed this limitation. As explained above, in combination with Chaffee, Wu's pump components (including Wu's motorized blower 15) would be contained in a built in housing. *See* Section VII.A.1.c.(1). Therefore, in combination, Wu and Chaffee disclosed that motorized blower 15 (the fan and motor) is received in the housing,. Decl., ¶270; Ex. 1001, Claim 12

8. <u>Claims 16-23</u>

Claims 16-23 recite limitations identical to those in Claims 1-9, 11, and 12. Decl., ¶¶271, 273, 275, 277, 279, 281, 283, 285. Specifically, Claim 16 recites language identical to Claims 1, 7, 8, and 11, except that it omits any requirement that the air conduit be movable between a first and second position "while remaining disposed at least in part in the housing." Decl., ¶271. Therefore, Claim 16 is unpatentable for the same reasons provided above in connection with Claims 1, 7, 8, and 11. Decl., ¶272.

Claims 17-23, which depend from Claim 16, are identical to Claims 2-6, 9, and 12, respectively, other than their dependence from a different independent

claim (i.e., Claim 16). Decl., ¶¶273, 275, 277, 279, 281, 283, 285. Therefore, because Claim 16, from which these claims depend, is unpatentable, Claims 17-23 are unpatentable for the same reasons provided above in connection with Claims 2-6, 9, and 12. Decl., ¶¶274, 276, 278, 280, 282, 284, 286.

B. GROUND 2: The Challenged Claims are Obvious in View of Wu in combination with Goldsmith

Wu in combination with Goldsmith discloses and suggests to a POSA a Uni-directional Pump Assembly (from Wu) built into an inflatable body (from Goldsmith) as claimed in the '394 Patent. *See KSR*, 550 U.S. at 420; *Mouttet*, 686 F.3d at 1332; Decl., ¶¶287-91.

1. Ground 2 is not redundant of Ground 1

Ground 2 is not redundant of Ground 1. Decl., ¶292. Goldsmith's housing 47 is distinct from Chaffee's Housing, and Goldsmith's housing 47 is riveted to a mattress rather than being adhered or heat sealed (as Chaffee taught). *Id.*

2. Claim 1

The unpatentability analysis of Claim 1 for Ground 1, above, is identical to the analysis of Claim 1 for Ground 2, except with respect to the limitations addressed in this Section. Therefore, for the remaining limitations, the Ground 1 analysis, above (*see* Sections VII.A.1.a-b), applies in Ground 2. Decl., ¶¶293-94.

a. <u>a housing built into the inflatable body, the housing having an interior region;</u>

Wu in combination with Goldsmith discloses this limitation. Decl., ¶295.

Referring to Figure 1, below, Goldsmith is directed toward a mattress and means "for blowing air of varying temperatures into the inner compartment of the mattress . . . to heat or cool the mattress [11] to a temperature above or below the normal outside or surrounding temperature." Goldsmith (Ex. 1007), 1:6-12; Decl., ¶129.

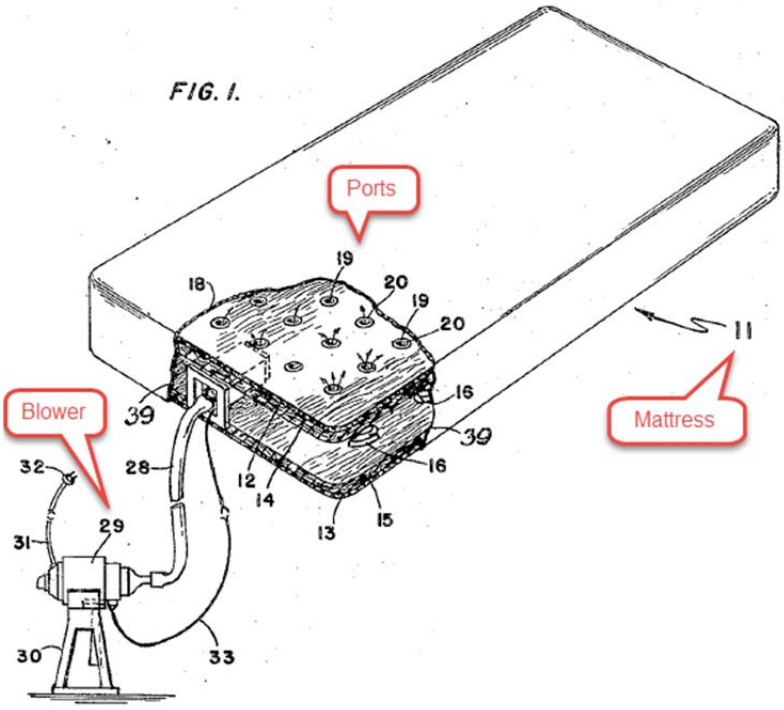

In one embodiment, Goldsmith discloses housing 42 "mounted or attached to" the air compartment of the mattress, the housing having a blower 39' and 40

(blue and green, respectively, in Fig. 6, below). Goldsmith, 1:41-44, 4:3-5; *see also id.* at 2:39-46; Decl., ¶130.

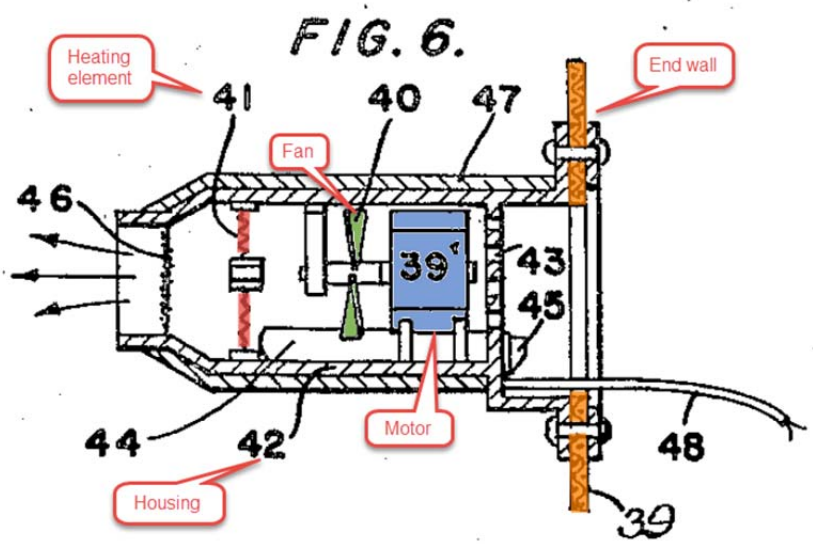

A POSA would have viewed Goldsmith to be analogous art. *Unwired Planet*, 841 F.3d at 1000-01. First, Goldsmith is from the same field of endeavor as Goldsmith discloses an air pump for an inflatable mattress. Goldsmith, 1:6-8, 3:25-28 (referring to "airtight" structure designed to "prevent the air within the aforementioned air compartment from escaping"), 4:17-21; Decl., ¶¶25, 133-34, 143-58.

At the very least, a POSA would have viewed Goldsmith as reasonably pertinent to the problem the '394 Patent is involved—i.e., building a fluid control

device into an inflatable body to overcome problems that arise when the pump/fluid control device is separate from the inflatable body. *Compare* Ex. 1001, 1:22-28 *with* Goldsmith, 4:11-12; Decl., ¶135.

A POSA would have been motivated by the built-in housing teachings of Goldsmith (described in more detail, below) to incorporate the pump components of system 10 of Wu (such as blower 15 and rotary valve 100) into a housing and build that housing into the inflatable body. Decl., ¶287-91.[6]

(1) Housing having an interior region. Referring to Figure 6, below, Goldsmith disclosed that the "air distributing chamber" had an interior region containing "a motor 39' [blue], fan 40 [green]. . . in a distribution casing [housing] 42." Goldsmith, 2:54-55, 4:1-5. Decl., ¶¶296-97.

[6] Goldsmith is prior art under 35 U.S.C. § 102(b), as it issued on January 3, 1950. Decl., ¶132. Goldsmith is also non-cumulative, as it was not considered during prosecution of the '394 Patent. Decl., ¶¶136.

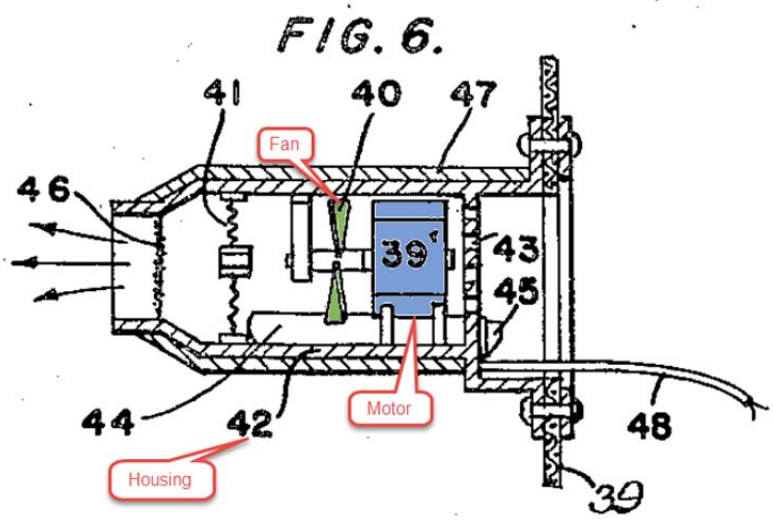

As of the Priority Date, a POSA would have been motivated to apply Goldsmith's teachings regarding the distribution casing 42 or a similar structure (i.e., the housing) with the pump components of Wu's system 10 such that the rotary valve 100 (and, thus, movable gate member 200) and blower 15 in Wu were disposed inside a housing. A POSA would have been motivated to apply Goldsmith's housing teachings to Wu's pump components for multiple reasons, which mirror the reasons provided in connection with Ground 1, above—including: (a) increased spatial efficiency, (b) enhanced durability, (c) decreased manufacturing costs, and (d) the fact that Wu is silent regarding how the pump components of Wu's system 10 structurally interface with one another. Decl.,

¶¶298-99; Section II.A.1.c.(1), above. And, to the extent necessary, a POSA would have known how to apply Goldsmith's housing teachings (i.e. casing 42) to Wu in order to accommodate Wu's pump components in a similar manner. Decl., ¶¶298-99.

(2) Housing built into the inflatable body. Goldsmith's casing 42 is "mounted or attached to the mattress" air compartment walls 39 (orange in Fig. 6, below) by "rivets [] or by other suitable means" and recessed therein via distribution casing 42 (the housing). Goldsmith, 2:54-55, 4:1-5. A POSA would have understood Goldsmith's casing 42 to be built in, as rivets are permanent connections and "other suitable means" suggests similar permanent connections. *Id.*; Decl., ¶300; Ex. 1072, 23-24 (citing "glued or welded" as examples of built in structures).

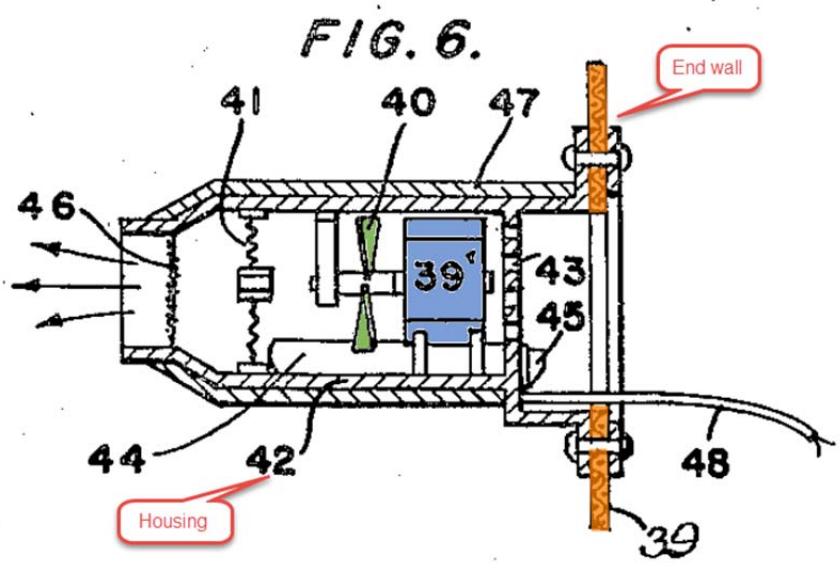

As explained immediately above, a POSA would have had numerous reasons for containing Wu's pump components with a built in housing, as taught by Goldsmith, such that Wu's housing contained pump structure was built into air mattress 400. Decl., ¶301; Sections VII.A.1.c.(1)-(2), VII.B.2.a.(1). Each of those reasons are equally applicable here, including: (a) it was more time and labor efficient, (b) increased spatial efficiency (particularly because Goldsmith's casing is disclosed as being flush with the mattress wall, as shown in Fig. 6, above), (c) enhanced durability, which led to additional marketability and cost advantages, and (d) the fact that Wu is silent regarding how the pump components structurally interface with air mattress 400. Decl., ¶301; Sections VII.A.1.c.(1)-(2),

VII.B.2.a.(1); *Dystar*, 464 F.3d at 1368; *KSR*, 550 U.S. at 416; *Haase*, 542 F. Appx. at 970.

b. <u>an air conduit disposed at least in part in the housing, the air conduit being movable between a first position and a second position while remaining disposed at least in part in the housing,</u>

As explained above, Wu disclosed an air conduit in the form of gate member 200 movable between a first and second position for inflation and deflation. Decl., ¶¶302-03; Sections VII.A.1.d(1)-(3). As also explained above, in combination with Goldsmith, Wu's rotary valve 100 (which includes gate member 200) would be contained in a housing. Decl., ¶303; Sections VII.B.2.a(1)-(2). Thus, in combination with Goldsmith, Wu's gate member 200 (the air conduit) would be disposed in the housing, and gate member 200 would remain disposed within this housing when moved between the first and second positions during inflation and deflation. Decl., ¶304.

c. <u>wherein air flows between the interior region of the housing and the inflatable body during inflation and deflation.</u>

Because air flows through gate member 200 of Wu during inflation and deflation and, when combined, rotary valve 100 (and, thus, gate member 200) of Wu is disposed within the housing, similar to Goldsmith's teachings, as a result, air

necessarily flows between the interior region of the housing and the inflatable body during inflation and deflation. Wu, Figure 1; Decl., ¶305.

3. Claims 2 and 3

As explained in Ground 1 (Section VII.A.2), Dependent claims 2 and 3 merely claim inflation (claim 2) and deflation (claim 3) operations. Wu in combination with Goldsmith disclosed these limitations. Decl., ¶306.

As explained above, air flows from gate member 200 of Wu to air mattress 400 when gate member is in the first, inflating position, and from air mattress 400 to gate member 200 when gate member is in the second, deflating position, and this occurs when gate member 200 of Wu is disposed within the housing as taught by Goldsmith. Decl., ¶¶307-08; Sections VII.A.1.c-e, VII.B.2.b-c. Therefore, in combination, air flows from the interior region of the housing, similar to Goldsmith's, into Wu's air mattress 400 (the inflatable body) when gate member 200 is in the first, inflating position, and from Wu's air mattress 400 to the interior region of the housing, similar to Goldsmith's, when gate member 200 is in the second, deflating position. Decl., ¶¶307-08; Sections VII.A.1.c-e, VII.B.2.b-c.

4. Claims 4-11

As discussed above in Ground 1 (Sections VII.A.2-6), Wu alone satisfies all of the limitations in Dependent Claims 4-11. Decl., ¶309. Therefore, the Ground 2 analysis of claims 4-11 is identical to the Ground 1 analysis of claims 4-11, above. *Id*.

5. Claim 12

Wu in combination with Goldsmith disclosed this limitation. As explained above, as combined with Goldsmith, Wu's pump components (including Wu's motorized blower 15) would be contained in a built in housing (e.g., similar to casing 42 taught by Goldsmith). Section VII.B.2.a. Therefore, in combination, Wu and Goldsmith disclosed that motorized blower 15 (the fan and motor) are received in the housing. Decl., ¶310.

6. Claims 16-23

As explained above in Ground 1 (Section VII.A.8), Claims 16-23 recite limitations identical to those in Claims 1-9, 11, and 12. Decl., ¶¶311-12. Therefore, for the same reasons provided in connection with Claims 1-9, 11, and 12, above (Section VII.B.1-5)—including, in particular, the reasons a POSA would have combined Wu and Goldsmith—Claims 16-23 are invalid as obvious. Decl., ¶¶311-12.

C. GROUND 3: The Challenged Claims are Obvious in View of Wu in combination with Parienti

Wu in combination with Parienti discloses and suggests to a POSA the broad concepts of a Uni-directional Pump Assembly (from Wu) built into an inflatable body (from Parienti) as claimed in the '394 Patent. *See KSR*, 550 U.S. at 420; *Mouttet*, 686 F.3d at 1332; Decl., ¶¶313-17.

1. Ground 3 is not redundant of Grounds 1 or 2

Ground 3 is not redundant of Grounds 1 or 2. Decl., ¶318. Parienti's housing is distinct from Chaffee's Housing (Ground 1) and Parienti's housing is glued to the mattress rather than being riveted (as in Goldsmith, Ground 2). *Id.*

2. Claim 1

The unpatentability analysis of Claim 1 for Ground 1, above, is identical to the analysis of Claim 1 for Ground 3, except with respect to the limitations addressed in this Section. Therefore, for the remaining limitations, the Ground 1 analysis, above (Sections VII.A.1.b), applies in Ground 3. Decl., ¶¶319-20.

a. an inflatable body;

As explained above (Section VII.A.1.a), Wu discloses an inflatable body in the form of air mattress 400 or, alternatively, a "constant pressure mattress." Decl., ¶¶180-83. To the extent the Board finds that "inflatable body" has a substantially airtight requirement and that Wu's alternative "constant air pressure

mattress" does not satisfy this limitation, a POSA would have relied on Parienti's inflatable mattress 5 (described in greater detail, below). *See* Parienti (Ex. 1008), 1:22-23. A POSA would have understood Parienti's inflatable mattress 5 to be a substantially airtight structure, as it is intended for recreational purposes. *Id.*, 1:8-19; Decl., ¶321.

In view of Wu's teaching that "system 10 is highly versatile and can be used to supply air to various types of air mattresses," a POSA would have found it obvious to use Wu's pump components with a substantially airtight mattress, such as Parienti's inflatable mattress 5. Wu, 4:44-47; *see also* Wu Provisional, 7:4-6; Decl., ¶322.

b. <u>a housing built into the inflatable body, the housing having an interior region;</u>

Wu in combination with Parienti discloses this limitation. Decl., ¶323.

Parienti disclosed a pump device [orange in Fig. 1, below] for automatically inflating and deflating its inflatable mattress that a "is made interdependent with the mattress by means of gluing or any other means." Parienti, 1:22-25; Decl., ¶137.

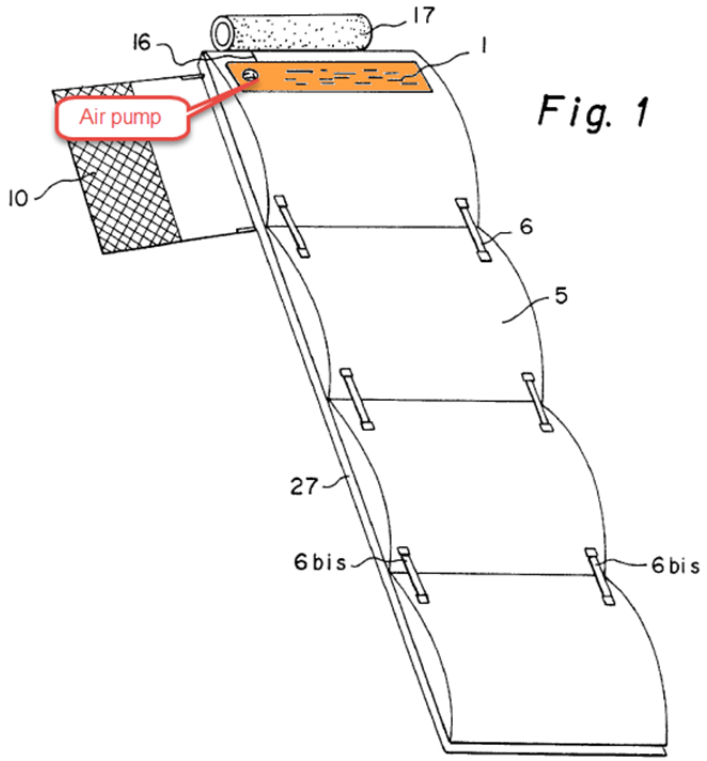

Referring to Figure 5, below, this pump device includes a housing [orange] having a protective grid 8, the housing containing the internal pump components, including the motor 2 and turbine 4 (not shown). Parienti, 2:55-3:6; *see also id.* at Figure 4; Decl., ¶¶138-39.[7]

[7] Parienti is prior art under 35 U.S.C. § 102(b) as it issued on February 1, 2000. Decl., ¶140. Parienti is also analogous and non-cumulative, as it relates to a pump device for inflating and deflating an inflatable mattress 5, which is the general subject matter of the Challenged Claims, and Parienti was not considered

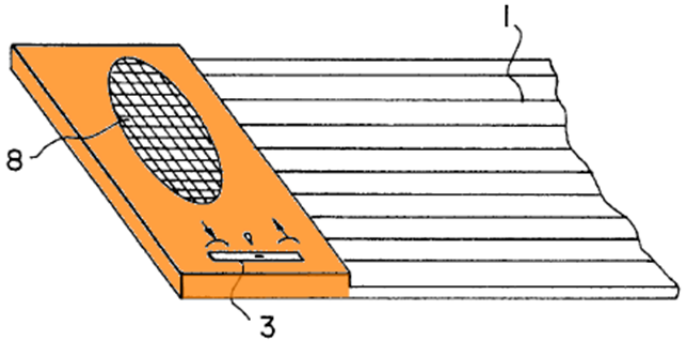

Fig. 5

(1) Housing having an interior region. Parienti's housing (orange) had an interior region, as it contained a motor 2 and turbine 4 (see Fig 4, below). Parienti, 2:55-3:6, Fig. 7; Decl., ¶¶324-25.

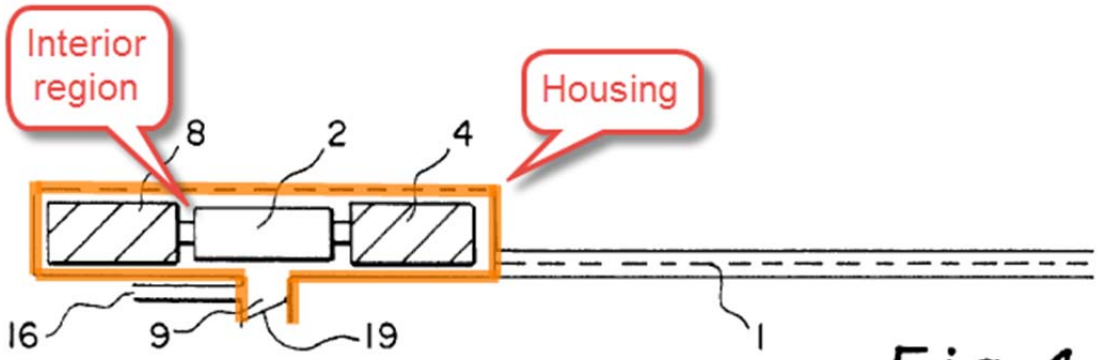

Fig. 4

A POSA would have been motivated to apply Parienti's housing teachings with Wu's pump components such that the rotary valve 100 (and, thus, movable gate member 200) and motorized blower 15 in Wu were disposed inside a built in

---

during prosecution of the '394 Patent. Parienti, Abstract; Decl., ¶¶141-42; *Unwired Planet*, 841 F.3d at 1000-01.

housing. A POSA would have had multiple reasons for doing so, which mirror the reasons provided in connection with Ground 1, above—including: (a) increased spatial efficiency, (b) enhanced durability, (c) decreased manufacturing costs, and (d) the fact that Wu is silent regarding how the pump components of Wu's system 10 structurally interface with one another. Decl., ¶¶326-27; Section VII.A.1.c.(1). And, to the extent necessary, a POSA would have known how to apply Parienti's housing teachings to Wu in order to accommodate Wu's pump components in a similar manner. Decl., ¶¶326-27.

(2) Housing built into the inflatable body. Parienti's housing is "made interdependent with the mattress [5] by means of gluing or any other means," and, therefore, is built into an inflatable body. Parienti, 1:24-25; Decl., ¶328; Ex. 1072, 23-24 (citing "glued or welded" as examples of built in structures).

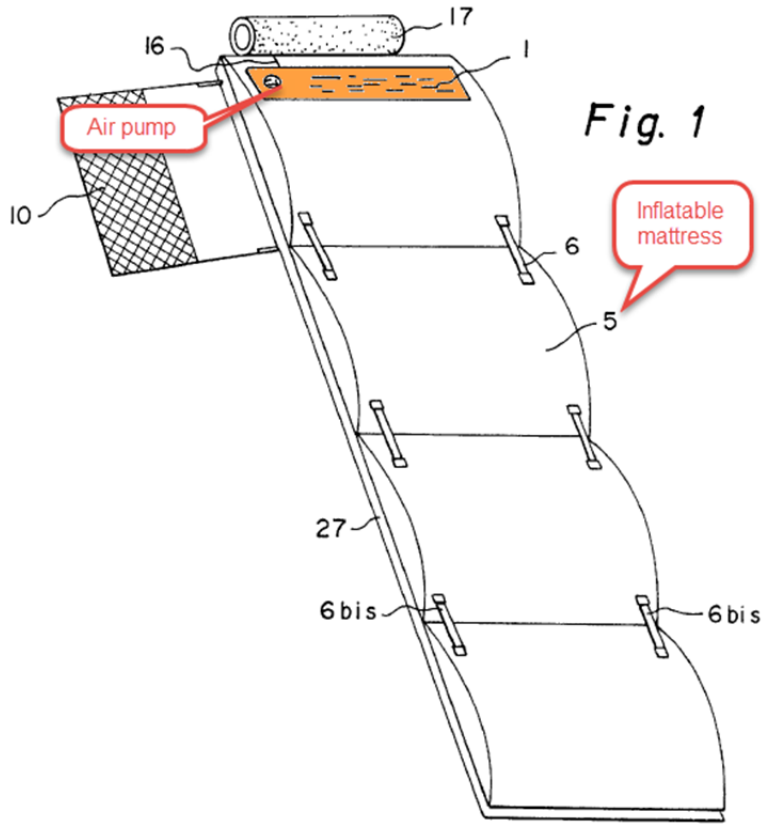

As explained above, a POSA would have had numerous reasons for containing the pump components of Wu with a built in housing, as taught by Parienti, such that Wu's housing contained pump structure was built in air mattress 400. Decl., ¶329; Sections VII.A.1.c.(1)-(2), VII.C.2.b.(1). Each of those reasons are equally applicable here, including: (a) it was more time and labor efficient, (b) increased spatial efficiency, (c) enhanced durability, (d) led to additional marketability and cost advantages, and (e) the fact that Wu is silent regarding how the pump components structurally interface with air mattress 400. *Id.*; *Dystar*, 464 F.3d at 1368; *KSR*, 550 U.S. at 416; *Haase*, 542 F. Appx. at 970.

c. <u>an air conduit disposed at least in part in the housing, the air conduit being movable between a first position and a second position while remaining disposed at least in part in the housing,</u>

As explained above, Wu disclosed an air conduit in the form of gate member 200 movable between a first and second position during inflation and deflation. Decl., ¶330; *see also* Sections VII.A.1.d(1)-(3). As also explained above, in combination with Parienti, Wu's rotary valve 100 (which includes gate member 200) would be contained in a built in housing. Decl., ¶330; *see also* Sections VII.C.2.b. Thus, Wu's gate member 200 would remain disposed within that housing when moved between the first and second positions during inflation and deflation. Decl., ¶¶331-32.

d. <u>wherein air flows between the interior region of the housing and the inflatable body during inflation and deflation.</u>

Because air flows through gate member 200 of Wu during inflation and deflation and, when combined with Parienti's teachings, rotary valve 100 (and, thus, gate member 200) of Wu is disposed within the interior region of the housing, and as a result, air flows between the interior region of the housing and the inflatable body during inflation and deflation. Wu, Figure 1; Decl., ¶333.

3. Claims 2 and 3

As explained in Ground 1 (Section VII.A.2), dependent claims 2 and 3 merely claim inflation (claim 2) and deflation (claim 3) operations. Wu in combination with Parienti disclosed these limitations. Decl., ¶334.

As explained above, air flows from gate member 200 of Wu to air mattress 400 when gate member is in the first, inflating position, and from air mattress 400 to gate member 200 when gate member is in the second, deflating position, and this occurs when gate member 200 is disposed in a housing as Parienti taught. Decl., ¶¶335-36; Sections VII.A.1.c-e, VII.C.2.b-d. Therefore, in combination, air flows from the interior region of the housing into Wu's air mattress 400 when gate member 200 is in the first position, and from Wu's air mattress 400 to the interior region of that housing when gate member 200 is in the second position. Decl., ¶¶335-36; Sections VII.A.1.c-e and VII.C.2.b-d.

4. Claims 4-11

As discussed above in Ground 1 (Sections VII.A.2-6), Wu alone satisfies all of the limitations in Dependent Claims 4-11. Decl., ¶337. Therefore, the Ground 3 analysis of claims 4-11 is identical to the Ground 1 analysis of claims 4-11, above. *See id*.

5. Claim 12

Wu in combination with Parienti disclosed this limitation. As explained above, as combined with Parienti's teachings, Wu's pump components (including motorized blower 15) would be contained in a built in housing. Section VII.C.2.b. Therefore, in combination, Wu and Parienti disclosed that motorized blower 15 (the fan and motor) are received in the housing. Decl., ¶338.

6. Claims 16-23

As explained above in Ground 1 (Section VII.A.8), Claims 16-23 recite limitations identical to those in Claims 1-9, 11, and 12. Decl., ¶339-40. Therefore, for the same reasons provided in connection with Claims 1-9, 11, and 12, above (*see* Section VII.C.1-5)—including, in particular, the reasons a POSA would have combined Wu and Parienti—Claims 16-23 are invalid as obvious. Decl., ¶339-40.

D. GROUND 4: The Challenged Claims are Obvious in View of Wu in combination with Goldsmith in further combination with Chaffee

1. Ground 4 is not redundant of Grounds 1-3

Petitioners request that the Board consider Ground 4 as an alternative to Ground 2 (Wu + Goldsmith) and only to the extent that: (1) the Board construes "inflatable body" to mean a substantially airtight structure that expands when filled

with air or other gases; and (2) the Board determines that Wu does not disclose such a structure, despite the analysis to the contrary above. Decl., ¶¶341-42.

2. <u>Challenged Claims</u>

The analysis of the Challenged Claims for Ground 2, above, is identical to the analysis of the Challenged Claims for Ground 4, except with respect to the following limitation:

- ***an inflatable body;***

As explained above (*see* Section VII.A.1.a), Wu teaches that "system 10 is highly versatile and can be used to supply air to various types of air mattresses such as a rotational therapy mattress, a pulsating mattress or constant pressure mattress." Wu, 4:44-47; Decl., ¶¶343-45; Wu Provisional, 7:4-6. As of the Priority Date, a POSA would have been well-aware of inflatable mattresses that are substantially airtight. Decl., ¶345.

Chaffee, for example, disclosed such a structure in bladder 20. Specifically, Chaffee disclosed an inflatable device 10 that included "a substantially fluid impermeable bladder 20" that "may be constructed in any manner and of any material(s) ***capable of retaining a desired fluid*** under a degree of pressure necessary for its intended application." Chaffee, 3:5-10, 3:32-42; 3:64; 4:23-26; Decl., ¶346.

In view of Wu's teaching that "system 10 is highly versatile and can be used to supply air to various types of air mattresses," (Wu, 4:44-47; *see also* Wu Provisional, 7:4-6), a POSA would have found it obvious to use Wu's system 10 with a substantially airtight inflatable body, such as Chaffee's bladder 20. Decl., ¶347. And, as explained above in Ground 2 (Section VII.B.), a POSA would have found obvious the remaining limitations of the Challenged Claims in view of Wu in combination with Goldsmith. Decl., ¶347.

E. <u>No Secondary Indicia of Non-obviousness</u>

Petitioners are not aware of any evidence of secondary considerations. Petitioners ask that the Board wait to undertake evaluation of secondary consideration evidence, if any, presented by Patent Owner until Petitioners have been given an opportunity to test or respond to such evidence. *Amneal Pharms., LLC v. Supernus Pharms., Inc.*, IPR2013-00368, Paper 6, at 12-13 (PTAB Dec. 17, 2013). Even if Patent Owner presents such evidence, however, it cannot be based on the "built in" element of the Challenged Claims, as this was well-known in the prior art. *See, e.g.,* Ex. 1006, Figs. 2, 5; Ex. 1008, Fig. 1; Ex. 1013, Fig. 2, Ex. 1007, Fig. 6; Decl., ¶¶97-106; *Tokai Corp. v. Easton Enters., Inc.,* 632 F.3d 1358, 1369 (Fed. Cir. 2011) ("If commercial success is due to an element in the prior art, no nexus exists.").

VIII. CONCLUSION

For the foregoing reasons, Petitioner respectfully requests that *inter partes* review of claims 1-12, 16-23 of the '394 Patent be instituted, and that all of these claims be cancelled.

FAEGRE BAKER DANIELS LLP

Dated: March 30, 2018

By: /s/ *Andrew M. McCoy*
Andrew M. McCoy
Reg. No. 65,046

TYPE-VOLUME CERTIFICATION

Pursuant to 37 C.F.R. § 42.24(d), Petitioner hereby certifies that this Petition for *Inter Partes* Review complies with the type-volume limitation of 37 C.F.R. § 42.24(c). This Petition contains 13,878 words, excluding the parts of the Petition exempted by 37 C.F.R. § 42.24(c), as calculated by Microsoft Word 2010, the word processing system used in its preparation.

Dated: March 30, 2018

By: /s/ *Andrew M. McCoy*
Andrew M. McCoy
Reg. No. 65,046

CERTIFICATE OF SERVICE

Pursuant to 37 C.F.R. § 42.105, I hereby certify that on March 30, 2018, I caused a true and correct copy of the Petition for *Inter Partes* Review in connection with U.S. Patent No. 7,246,394 and Exhibits 1001–1073 to be served via Fed Ex Priority Overnight delivery on the following:

Nelson Quintero
Quintero Law Office, PC
615 Hampton Dr., Suite A202
Venice, CA 90291

I also caused a true and correct copy of the Petition for *Inter Partes* Review in connection with U.S. Patent No. 7,246,394 and Exhibits 1001–1073 to be served via Fed Ex Priority Overnight Delivery on the following additional parties:

Korula Cherian
Sunnyc@ruyakcherian.com

Robert Harkins
bobh@ruyakcherian.com

Robert Ruyak
robertr@ruyakcherian.com

Ronald Wielkopolski
ronw@ruyakcherian.com

Corrine Saylor Davis
corrinesd@ruyakcherian.com

FAEGRE BAKER DANIELS LLP

Dated: March 30, 2018

By: /s/ *Andrew M. McCoy*
Andrew M. McCoy
Reg. No. 65,046

Faegre Baker Daniels LLP
300 N. Meridian Street, Ste. 2700
Indianapolis, Indiana 46204