[500 Yen revenue stamp]

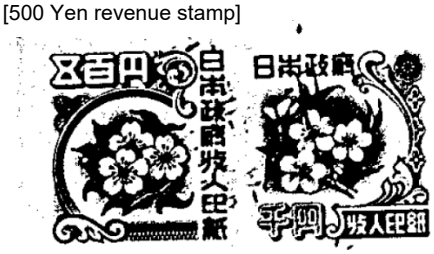

[1,000 Yen revenue stamp]

1500 Yen

Patent application (2)

June ２８, １９７２

Director-General of Patent Office Takehisa Ido

[stamp:] Approved

１. Invention name: Box-shaped air mattress

２. Inventor:

(reading guide for pronunciation)

Address (Location): 4-3480, Ashikagashi Toori, Ibaraki

(reading guide for pronunciation)

Name: Kunitarou Aoki

(Other inventors)

3. Applicant

Postal Code: 160

Address: 22-5 Daikyo-cho, Shinjuku-ku, Tokyo

Name: (115) Prosperous Country Chemical Industry Co., Ltd.

Representative: Isamu Kobayashi

(Other inventors)

4. Attachments

1. Specifications 1
2. Drawings 1
3. Application duplicate 1

４７−０７６４０２

[Stamp:] Patent office: June 28, 1972

４９−３４８１１−０１

Specifications:

1. Patent application item:
   Box-shaped air mattress

2. Scope of the application
   A box-shaped air mattress in which
   a vertical hanging sheet between the upper and bottom sheet of the box-shaped air mattress, as well as diagonal bracing hanging sheets between the upper and lengthwise sheets, bottom and lengthwise sheets, upper and widthwise sheets, and the bottom and widthwise sheets, respectively.
3. Detailed explanation of the device
   This device relates to a highly stable box-shaped air mattress structure. Existing air mattresses merely adhere to the vertical hanging sheet (c) between the upper (a) and bottom (b) sheets at a designated height.
   As a result, when air is inserted, the sides of the box-shaped air mattress become rounder on the outside than the inside, both ends (d) (d') of the hanging sheet (c) slacken, and the surrounding area becomes shorter than the middle part of the upper and bottom layers, and the upper and bottom layers create an arch shape, just like in Figure 5.

As a result, the air mattress may become unstable, making it difficult to sit on and wobble, thus increasing the likelihood that people lying on it will fall off.

This tendency becomes greater the higher the sides become.

This device aims to resolve the aforementioned disadvantages with existing air mattresses. This device will be explained in detail using case study drawings.

In the box-type air mattress (5) which is comprised of an upper sheet (1), bottom sheet (2), lengthwise sheet (3), and widthwise sheet (4), multiple layers of vertical hanging sheets (6) are placed in between the upper (1) and bottom (2) sheets. At this point, the peripheral areas (7) of the upper (1) and bottom (2) sheets do not adhere due to the vertical hanging sheet (6). Each of the diagonal bracing hanging sheet (10) adhesive positions (8) and (9) as well as both ends of the adhesive site (11), (11') of the upper sheet (1) and lengthwise sheet (3), will attach. In the same manner, the diagonal bracing hanging sheet (10) will adhere to the bottom (2) and lengthwise sheets (3), to the upper (1) and widthwise sheets (4), and to the bottom (2) and widthwise sheets (4).

By inserting the diagonal bracing hanging sheet (10), the air pressure inside the box-shaped air mattress (5) will increase, so even if the lengthwise (3) and widthwise (4) sheets become rounder at the outside, the diagonal bracing hanging sheet (10) will tense, and this will affect its relationship with each side. In other words, the lengthwise (3) and widthwise (4) sheets will be almost perpendicular to the upper (1) and bottom (2) sheets. When configuring the box-shaped air mattress (5), it may have a total of 6 sheets, 1 upper sheet (1), 1 bottom sheet (2), 2 lengthwise sheets (3), and 2 widthwise sheets (4). It may also be configured with the upper (1), bottom (2), and the lengthwise (3) being integrated, with 3 pairs (2 pieces) of widthwise (4) sheets. In the same manner, the lengthwise (3) and the widthwise (4) may be integrated, with 3 of the upper (1) and lower (2).

Added 1 word

Regardless of which of the above embodiments is used, reinforcing tape (12) may be placed on the adhering portion of each sheet surface. The recommended method of doing so is to adhere or sow the vertical hanging sheet (6), the diagonal bracing hanging sheet (10), or the intermediate materials (13) to the adhesion site (11)(11').

INTEX EX. 1005, Pg. 4
Intex Recreation v. Bestway Inflatables, IPR2023-00488

When adhered, the intermediate materials (13) will not peel off the adhesion sites (11), (11'), and as the intermediate materials (13) and adhesion site (11) will be integrated, both the vertical hanging sheet (6) and diagonal bracing hanging sheet (10), when tense, will have sufficient adhesive power to so that the respective surface sheets and hanging sheets will not peel off.

The adhesion site (11'), which is adhered to the lengthwise (3) or the widthwise (4) sheet, may be even longer than the adhesion site (11) which is adhered to the upper (1) or bottom (2) sheet. In other words, the diagonal bracing hanging sheet (10) will become a trapezoid, as shown in Figure 3. This way, the adhesive sheet (11') can be attached to the diagonal bracing hanging sheet (10). As shown in Figure 4, just one diagonal bracing hanging sheet (10) for each corner is insufficient, and it is desirable for two or more diagonal bracing hanging sheets (10) to be placed there. When performed this way, even for large box-shaped air mattresses, it will be possible to achieve perpendicularity of the peripheral areas.

For the box-shaped air mattress (5) in this plan, a vertical hanging sheet (6) shall be installed, and at the same time, a diagonal bracing hanging sheet (10) shall also be installed, as stated above; therefore even if it is full of air, the middle of each surface will not swell and form an arch.

As described previously, the box-shaped air mattress does not shake and persons lying on it will not fall off. It is extremely stable. The height of the vertical hanging sheet (6) is shortened, and by using sheets with slightly smaller widths, it is possible to depress the middle portion of the vertical hanging sheet (6) of the upper sheet (1) in relation to the surrounding area thus allaying concerns about falling off when lying on it. By using the diagonal bracing hanging sheet, no matter how large the box-shaped air mattress, the upper sheet, the lower sheet and the side sheets shall be maintained at an approximate 90-degree angle so it is possible to construct a large box-shaped air mattress.

The depression **of the main line** which can be made at the adhesion sites at each surface with the vertical hanging sheet (6) and diagonal bracing hanging sheet (10), provides design advantages by placing an accent on the surface of the box-shaped air mattress.

4. Simple explanation of the drawings

Figure 1 is an oblique drawing of the subject of this patent application. Figure 2 is a magnification of the cross-section at the A-A' line. Figure 3 is an oblique figure with the diagonal bracing hanging sheet partially omitted. Figure 4 is a cross-section of the subject of this patent application showing the adhesive status of the diagonal bracing hanging sheet.

Figure 5 is a cross-section showing the box-shaped air mattress in a state of use, with existing methods.
In the figure, 1 is the upper sheet, 2 is the bottom sheet, 3 is the lengthwise sheet, 4 is the widthwise sheet, 5 is the box-shaped air mattress, 6 is the vertical hanging sheet, 7 is peripheral area, 8 and 9 are the adhesive state of the diagonal bracing hanging sheet, 10 is the diagonal bracing hanging sheet, 11 is the adhesion site, 12 is the reinforcing tape, and 13 is the inside material of the diagonal bracing hanging sheet .

Corrected 3 words

Applicant
Prosperous Country Chemical Industry Co., Ltd.
Representative: Isamu Kobayashi

49-34811-07

Figure 1

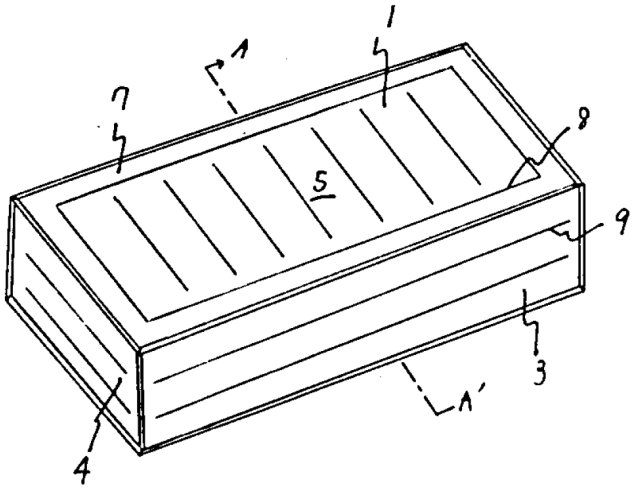

Figure 2

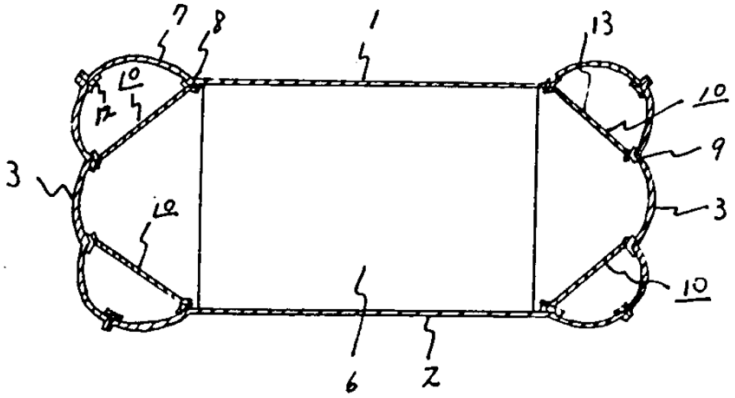

Applicant: Prosperous Country Chemical Industry Co., Ltd.

49-34811-08

Figure 3

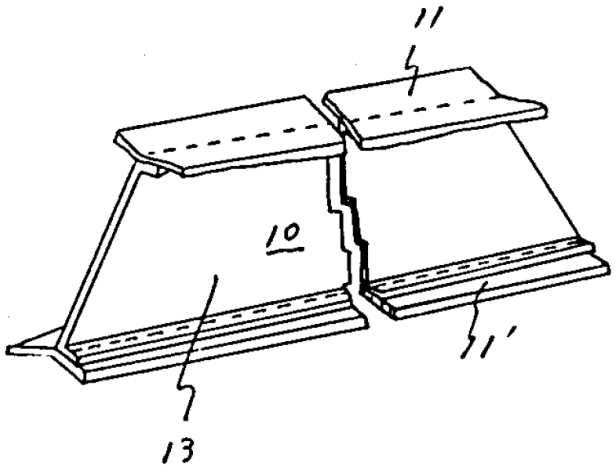

Figure 4

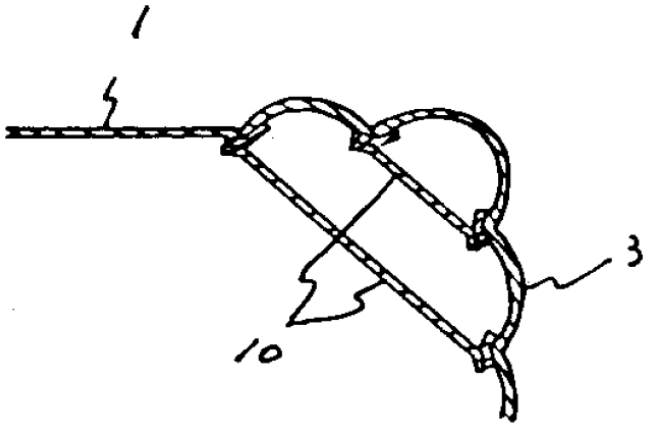

Applicant: Prosperous Country Chemical Industry Co., Ltd.

49-34811-09

Figure 5

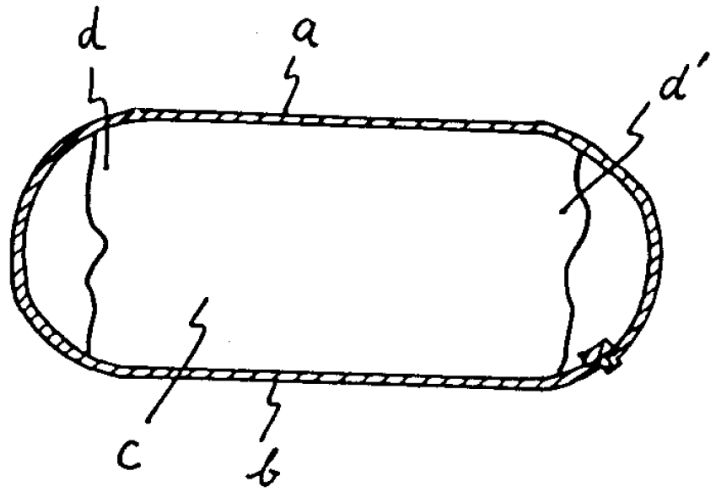

Applicant: Prosperous Country Chemical Industry Co., Ltd.

MORNINGSIDE

I, Simon Way, hereby declare as follows:

1. I am more than eighteen (18) years of age and I am competent to make this declaration.

2. I am a translator employed by Morningside/Questel, which is located at 450 7th Avenue. 10th Floor. New York, NY 10123.

3. I possess advanced knowledge of the Japanese and English languages. I have over 15 years of experience as a translator of technical documents from Japanese to English.

4. The attached translation is, to the best of my knowledge and belief, a true and accurate translation from Japanese to English of the document titled JPU11974034811.pdf

I declare that all statements made herein of my own knowledge are true and all statements made on information and belief are believed to be true, and further that these statements were made with the knowledge that willful false statements and the like are punishable by fine or imprisonment, or both, under 18 U.S.C. 1001, and that such willful false statements and the like may jeopardize the validity of the application or submission or any registration resulting therefrom.

I declare under penalty of perjury under the laws of the United States of America that the foregoing is true and correct.

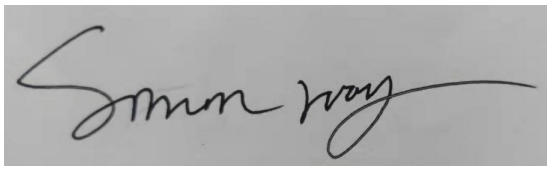

Executed on: 10 June, 2022

Signature

Simon Way

Printed Name