(19) The National Intellectual Property Administration of the People's Republic of China

(12) Utility Model Patent

(10) Patent No: CN 203137719 U

(45) Patent Date: August 21, 2013

(21) Appl. No.: 201320042268. 2

(22) Filed on: January 25, 2013

(73) Patent Holder: INTEX IND XIAMEN CO LTD
Address: Haicang Xinyang Industrial Zone, Xiamen City, Fujian Province 361022

(72) Inventor(s): LIN Huaxiang, XU Yaoyuan

(74) Patent Firm or Agency: Xiamen Xinhua Patent and Trademark Agency Co., Ltd. 35203
Agent: QU Shuhua

(51) Int. Cl.
A47C 31/00 (2006. 01)
A47C 27/08 (2006. 01)

(ESM) An invention patent application for the same invention was filed on the same day

Claims 1 page, Description 3 pages, Drawings 7 pages

(54) Title of Utility Model

CABLE-STAYED REINFORCEMENT STRUCTURE FOR AIR CHAMBER OF INFLATABLE PRODUCT

(57) Abstract of Disclosures

The utility model discloses a cable-stayed reinforcement structure for an air chamber of an inflatable product, which includes an upper piece, a lower piece, a plurality of drawbelts and a wrapping piece. Two ends of each of the drawbelts are respectively connected to a lower surface of the upper piece and an upper surface of the lower piece, and upper and lower sides of the

wrapping piece are respectively connected with a periphery of the upper piece and a periphery of the lower piece to form the inflatable product having an air chamber. It further includes a side wrapping belt, one end of the side wrapping belt being connected to a middle of an inner surface of the wrapping piece, and the other end thereof being connected to the lower surface of the upper piece near the periphery or the upper surface of the lower piece near the periphery. By the side wrapping belt provided connecting the middle of the wrapping piece of the inflatable product and the upper piece or/and lower piece so as to achieve a traction and position restriction on the middle of the wrapping piece of the inflatable product with a relatively large height, the utility model not only prevents the wrapping piece from overly protruding to affect the strength and appearance of the product, but also effectively reduces the material cost and production cost.

What is claimed is:

1. A cable-stayed reinforcement structure for an air chamber of an inflatable product, comprising an upper piece, a lower piece, a plurality of drawbelts, and a wrapping piece, two ends of each of the drawbelts being respectively connected to a lower surface of the upper piece and an upper surface of the lower piece, and upper and lower sides of the wrapping piece being respectively connected with a periphery of the upper piece and a periphery of the lower piece to form the inflatable product having an air chamber; characterized in that the cable-stayed reinforcement structure further comprises a side wrapping belt, one end of the side wrapping belt is connected to a middle of an inner surface of the wrapping piece, and another end thereof is connected to the lower surface of the upper piece near the periphery thereof, or the upper surface of the lower piece near the periphery thereof.

2. The cable-stayed reinforcement structure for an air chamber of an inflatable product according to claim 1, characterized in that the side wrapping belt is an integral ring-shaped drawbelt formed by ring-shaped plastic strips at two ends thereof connecting with a plurality of cables, wherein a plastic strip is further fixed at a middle of the plurality of cables, the ring-shaped plastic strips at the two ends of the side wrapping belt are respectively connected to the upper piece and the lower piece, and the plastic strip at the middle is connected to the middle of the inner surface of the wrapping piece.

3. The cable-stayed reinforcement structure for an air chamber of an inflatable product according to claim 1, characterized in that the side wrapping belt is an integral ring-shaped drawbelt formed by ring-shaped plastic strips at two ends thereof connecting with a plurality of cables, the plastic strip at one end of the side wrapping belt is connected to the middle of the inner surface of the wrapping piece, and another end thereof is connected to the upper piece and the lower piece.

4. The cable-stayed reinforcement structure for an air chamber of an inflatable product according to claim 1, 2 or 3, characterized in that each of the drawbelts is a belt corresponding to a width or length of a bed and is formed by plastic strips at two ends thereof connecting with a plurality of cables, and the plastic strips at two ends thereof are welded to the upper piece and the lower piece, respectively.

5. The cable-stayed reinforcement structure for an air chamber of an inflatable

product according to claim 4, characterized in that a ring-shaped upper suction piece and a ring-shaped lower suction piece are respectively disposed between the upper piece and the wrapping piece and between the lower piece and the wrapping piece, the upper piece is connected to an upper periphery of the wrapping piece via the ring-shaped upper suction piece, and the lower piece is connected to a lower periphery of the wrapping piece via the ring-shaped lower suction piece.

CABLE-STAYED REINFORCEMENT STRUCTURE FOR AIR CHAMBER OF INFLATABLE PRODUCT

TECHNICAL FIELD

[0001] The utility model relates to a structure of an inflatable product, and in particular to a cable-stayed reinforcement structure for an air chamber of an inflatable product.

BACKGROUND

[0002] Inflatable products, such as airbeds, are featured by being easy to use, light weighted, easy to move, and easy to fold and carry, making them a suitable choice when used as a temporary or non-fixed bed. Inflated beds with smaller bed thickness after inflation are generally used outdoors. If the comfort of the inflatable bed is to be improved to be comparable to that of household beds, the thickness of the inflatable bed after inflation must be as high as that of a normal bed, and the structure must also be relatively stable to ensure the flatness of the bed surface.

[0003] As shown in FIG. 1, the airbed with a height of a normal bed is usually formed by superimposing two independent air chambers A and B in order to prevent the periphery of the bed from overly protruding and to provide a supporting force and the shape-keeping strength of the air cavity. That is, a middle piece C has to be provided such that two air cavities are formed by two independent shrouds connecting to the middle piece and, respectively, an upper piece and a lower piece. Respective sets of belts are arranged in the two air cavities to form a bed shape. Such a structure necessarily has the following disadvantages.

[0004] 1. The material cost is high. Due to the provision of the middle piece to facilitate the shaping and the function of the bed, it not only increases the consumption of the material but also increases the weight of the bed.

[0005] 2. The drawbelts in the two independent air cavities need to be welded separately, which invisibly increases the complexity of the production of the bed, thus leading to a high production cost.

SUMMARY

[0006] It is an object of the utility model to provide a cable-stayed reinforcement structure for an air chamber of an inflatable product, which may prevent the periphery of the product from overly protruding to affect the aesthetic appearance of the product while ensuring the height and strength of the product, and may effectively reduce the material cost and the production cost.

[0007] To achieve this, the solutions of the present utility model are as follows.

[0008] A cable-stayed reinforcement structure for an air chamber of an inflatable product, including an upper piece, a lower piece, a plurality of drawbelts and a wrapping piece, two ends of each of the drawbelts being respectively connected to a lower surface of the upper piece and an upper surface of the lower piece, and upper and lower sides of the wrapping piece being respectively connected with a periphery of the upper piece and a periphery of the lower piece to form the inflatable product having an air chamber; it further includes a side wrapping belt, one end of the side wrapping belt being connected to a middle of an inner surface of the wrapping piece, and another end thereof being connected to the lower surface of the upper piece near the periphery or the upper surface of the lower piece near the periphery thereof.

[0009] The side wrapping belt is an integral ring-shaped drawbelt formed by ring-shaped plastic strips at two ends thereof connecting with a plurality of cables, wherein a plastic strip is further fixed at a middle of the plurality of cables, the ring-shaped plastic strips at the two ends of the side wrapping belt are respectively connected to the upper piece and the lower piece, and the plastic strip at the middle is connected to the middle of the inner surface of the wrapping piece.

[0010] The side wrapping belt is an integral ring-shaped drawbelt formed by ring-shaped plastic strips at two ends thereof connecting with a plurality of cables, the plastic strip at one end of the side wrapping belt being connected to a middle of an inner surface of the wrapping piece, another end thereof being connected to the upper piece and the lower piece.

[0011] Each of the drawbelts is a belt corresponding to a width or length of a bed and is formed by plastic strips at two ends thereof connecting with a plurality of cables, and the plastic strips at both ends being welded to the upper piece and the lower piece, respectively.

[0012] A ring-shaped upper suction piece and a ring-shaped lower suction piece are respectively disposed between the upper piece and the wrapping piece and between the lower piece and the wrapping piece, the upper piece being connected to an upper periphery of the

wrapping piece via the ring-shaped upper suction piece, and the lower piece being connected to a lower periphery of the wrapping piece via the ring-shaped lower suction piece.

[0013] With the above solutions, the utility model not only prevents the wrapping piece from overly protruding to affect the strength and appearance of the product, but also effectively reduces the material cost and production cost, by the side wrapping belt provided connecting the middle of the wrapping piece of the inflatable product and the upper piece or/and lower piece so as to achieve a traction and position restriction on the middle of the wrapping piece of the inflatable product with a relatively large height.

BRIEF DESCRIPTION OF THE DRAWINGS

[0014] FIG. 1 is a perspective view of the appearance of a conventional article;

[0015] FIG. 2 is an exploded perspective view of a first embodiment of the present utility model;

[0016] FIG. 3 is a schematic view of the appearance of the first embodiment of the present utility model;

[0017] FIG. 4 is a partial cross-sectional view showing the first embodiment of the present utility model;

[0018] FIG. 5 is an exploded perspective view of a second embodiment of the present utility model;

[0019] FIG. 6 is a schematic view of the appearance of the second embodiment of the present utility model; and

[0020] FIG. 7 is a partial cross-sectional view showing the second embodiment of the present utility model.

DETAILED DESCRIPTION

[0021] As shown in FIGS. 2 to 7, the utility model discloses a cable-stayed reinforcement structure for an air chamber of an inflatable product, in particular, a rectangular inflatable product, which includes an upper piece 1, a lower piece 2, a plurality of drawbelts 3, and a wrapping piece 4, as well as a side wrapping belt 5. Two ends of each of the drawbelts 3 are respectively connected to a lower surface of the upper piece 1 and an upper surface of the lower piece 2, and upper and lower sides of the wrapping piece 4 are respectively connected with a

periphery of the upper piece 1 and a periphery of the lower piece 2, thereby forming an inflatable product having an air chamber, with one end of the side wrapping belt 5 connected to a middle of an inner surface of the wrapping piece 4, and the other end connected to the lower surface of the upper piece 1 near the periphery or the upper surface of the lower piece 2 near the periphery.

[0022] The following is an illustration of the inflatable product by taking an airbed as an example, but the inflatable product is not limited thereto.

[0023] As shown in FIGS. 2, 3 and 4, in the first embodiment of the present utility model, each of the drawbelts 3 is a belt corresponding to the width or length of the bed, which is formed by plastic strips 31 at both ends connecting with a plurality of cables 32, with the plastic strips 31 used for welding with the upper piece 1 and the lower piece 2, and the cables 32 for bearing a strong traction force. The side wrapping belt 5 is an integral ring-shaped drawbelt, which is formed by ring-shaped plastic strips 51 at both ends connecting with a plurality of cables 52, with a plastic strip 53 being fixed in the middle of the plurality of cables 52, so that the ring-shaped plastic strips 51 at both ends of the side wrapping belt 5 are respectively connected to the upper piece 1 and the lower piece 2, and the plastic strip 53 in the middle are connected to a middle of an inner surface of the wrapping piece 4.

[0024] Here, the provision of the side wrapping belt 5 is such that the middle portion of the wrapping piece 4 is further pinched to be concave to ensure the aesthetics of the periphery of the airbed having a relatively large height and an air cavity, to prevent the periphery from overly protruding, and, at the same time, to ensure the strength of the periphery of the bed and the support strength of the bed as a whole.

[0025] In order to improve the aesthetics of the bed, a ring-shaped upper suction piece 11 and a ring-shaped lower suction piece 21 are respectively disposed between the upper piece 1 and the wrapping piece 4 and between the lower piece 2 and the wrapping piece 4. That is, the upper piece 1 is connected with the upper periphery of the wrapping piece 4 via the ring-shaped upper suction piece 11, and the lower piece 2 is connected with the lower periphery of the wrapping piece 4 via the ring-shaped lower suction piece 21.

[0026] As shown in FIGS. 5, 6 and 7, in the second embodiment of the present utility model, each of the drawbelts 3 is also a belt corresponding to the width or length of the bed, which is also formed by plastic strips 31 at both ends connecting with a plurality of cables 32, with the plastic strips 31 used for welding with the upper piece 1 and the lower piece 2, and the

cables 32 for bearing a strong traction force. The side wrapping belt 5 is an integral ring-shaped drawbelt, which is formed by ring-shaped plastic strips 51 at both ends connecting with a plurality of cables 52. The plastic strip 51 at one end of the wrapping belt 5 is connected to a middle of an inner surface of the wrapping piece 4, and the other end is connected to the upper piece 1 and the lower piece 2. Therefore, the airbed having a relatively large height and an air cavity is prevented from having an overly protruding periphery, and the strength of the periphery of the bed and the support strength of the bed as a whole are ensured.

[0027] Likewise, in order to improve the aesthetics of the bed, a ring-shaped upper suction piece 11 and a ring-shaped lower suction piece 21 are respectively disposed between the upper piece 1 and the wrapping piece 4 and between the lower piece 2 and the wrapping piece 4. That is, the upper piece 1 is connected with the upper periphery of the wrapping piece 4 via the ring-shaped upper suction piece 11, and the lower piece 2 is connected with the lower periphery of the wrapping piece 4 via the ring-shaped lower suction piece 21.

[0028] It should be noted that the drawbelt 3 and the side wrapping belt 5 in the above first and second embodiments are not limited to the structure of the plastic strips and the plurality of cables, and that they can alternatively be implemented with a linear drawbelt or a cylindrical drawbelt of an integral plastic piece as long as they satisfy the requirements of the internal pressure of the inflatable product.

[0029] In summary, by connecting the middle of the wrapping piece 4 of the inflatable product and the upper piece 1 or/and lower piece 2 so as to achieve a traction and position restriction on the middle of the wrapping piece 4 of the inflatable product with a relatively large height, the utility model not only prevents the wrapping piece from overly protruding to affect the strength and appearance of the product but also effectively reduces the material cost and production cost.

DRAWINGS

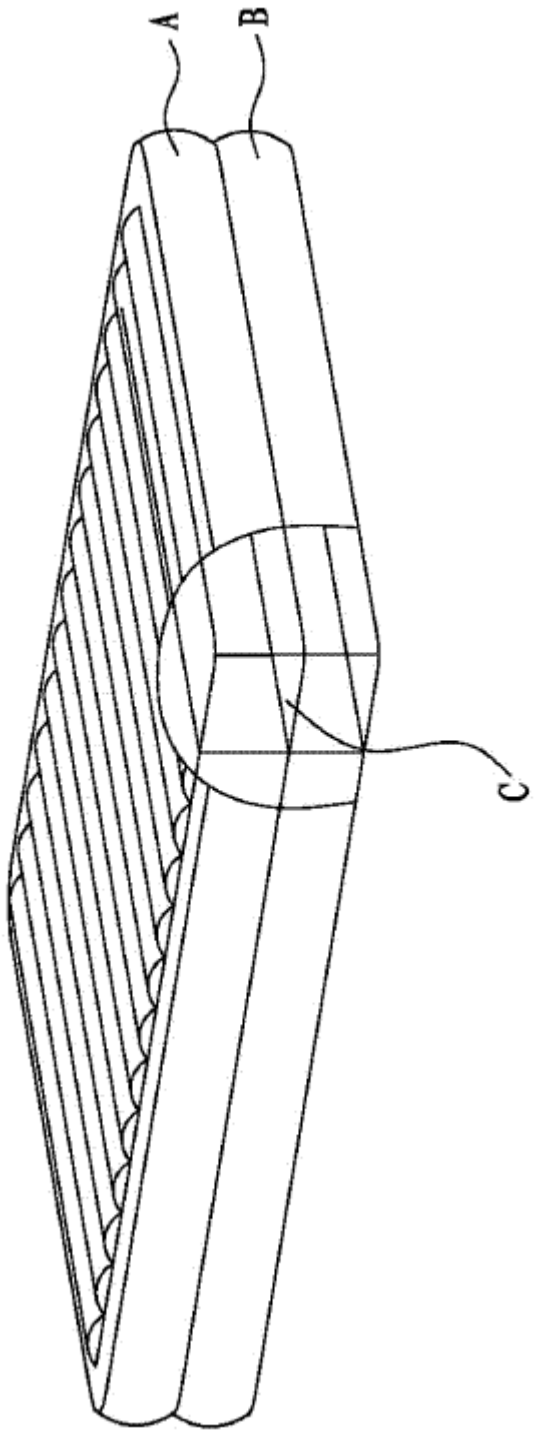

FIG. 1

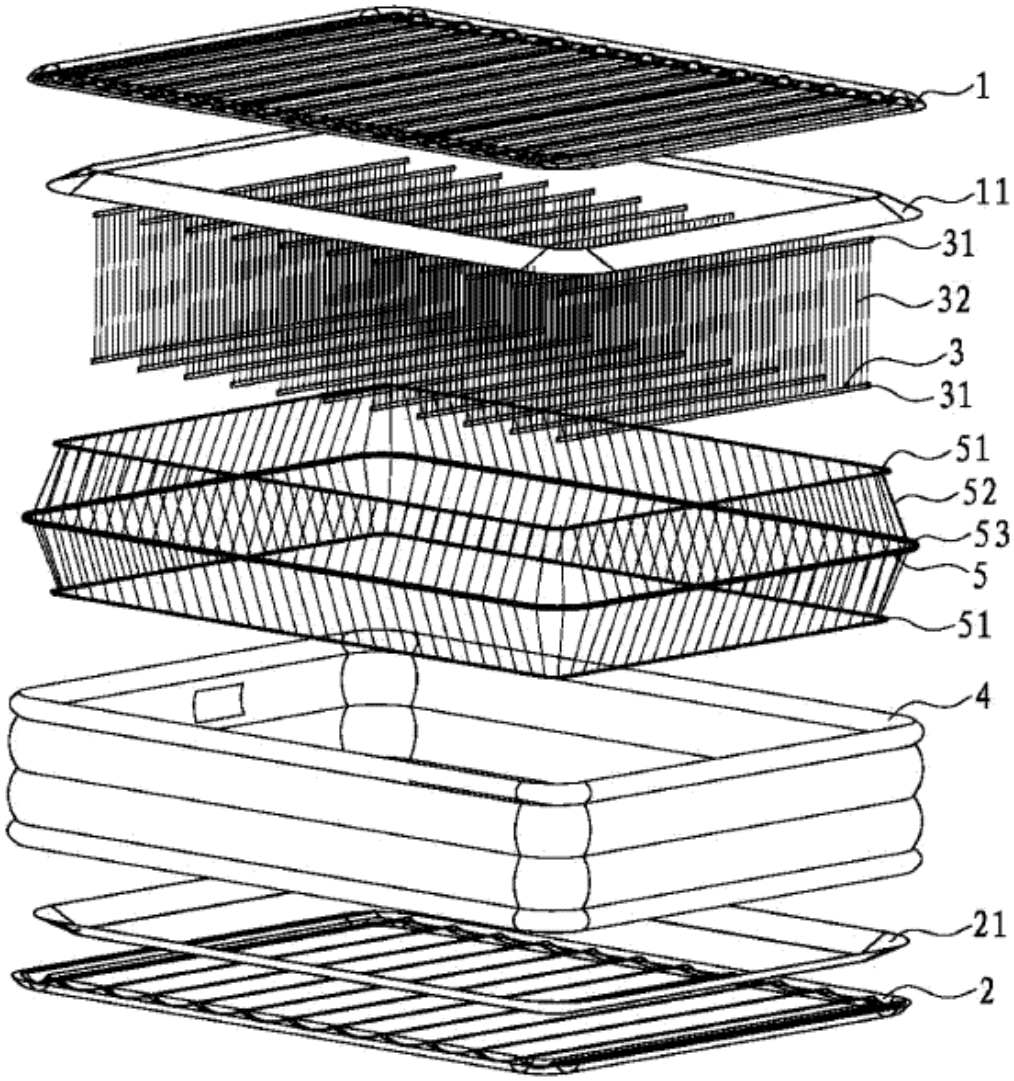

FIG. 2

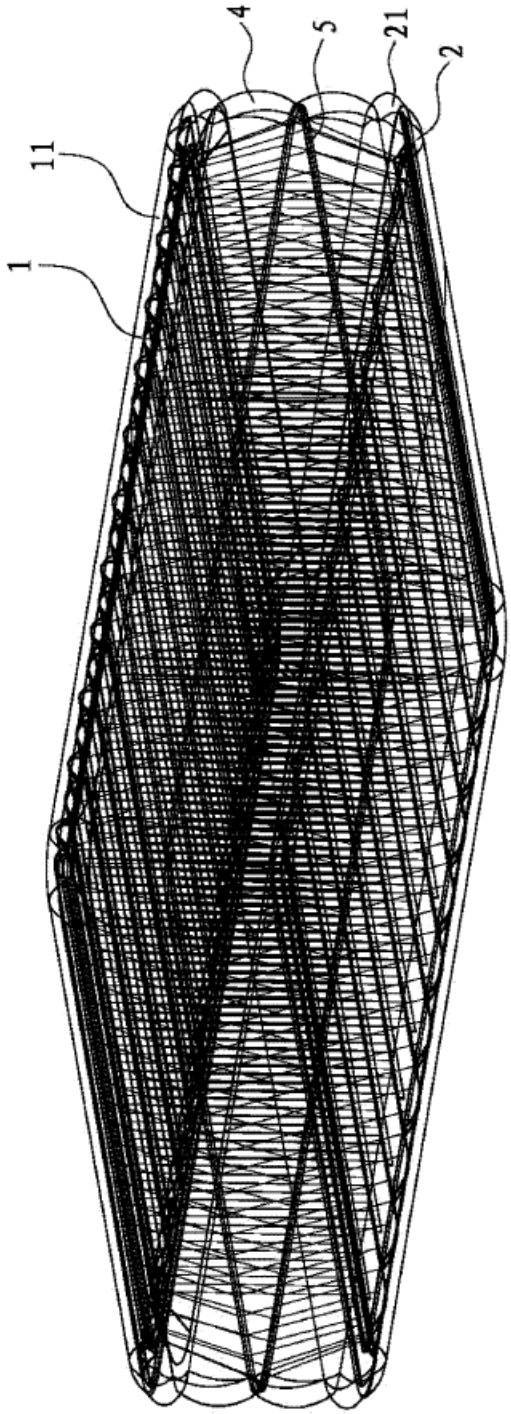

FIG. 3

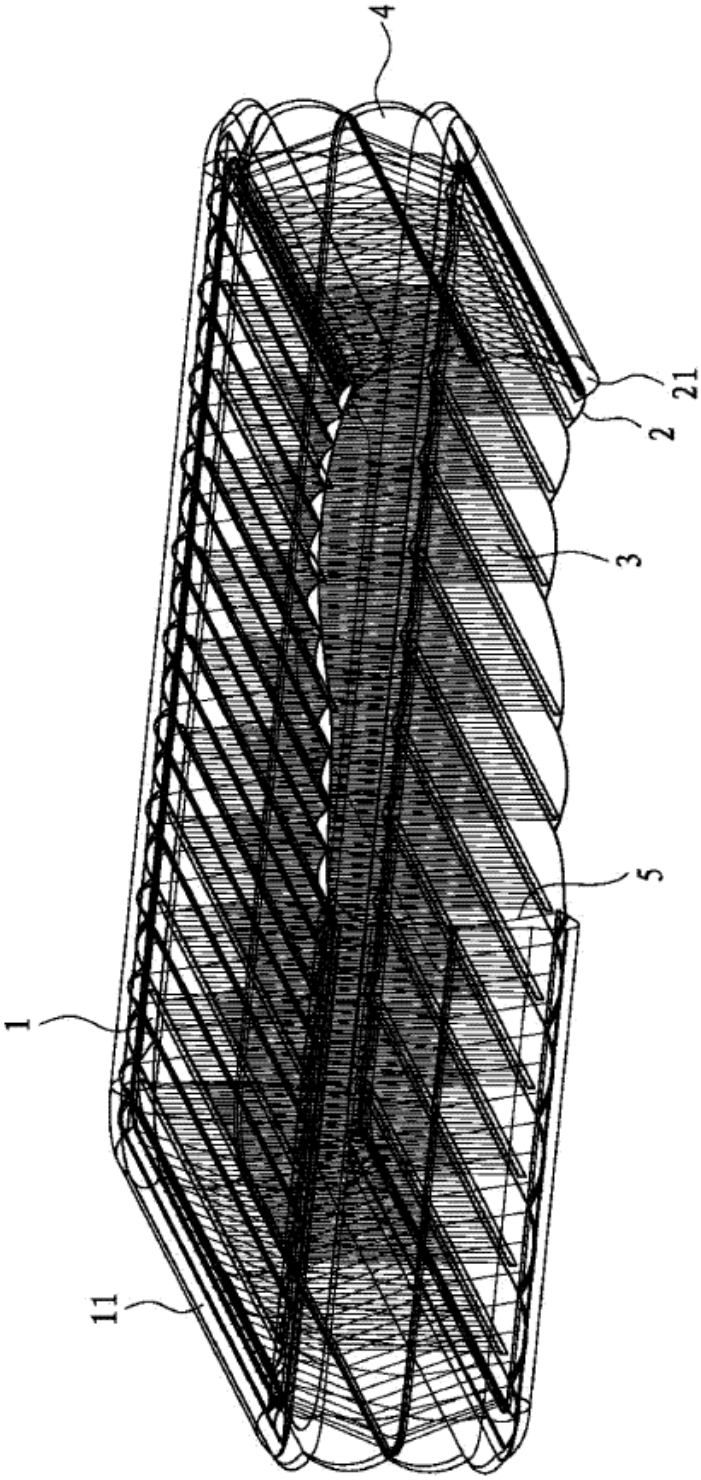

FIG. 4

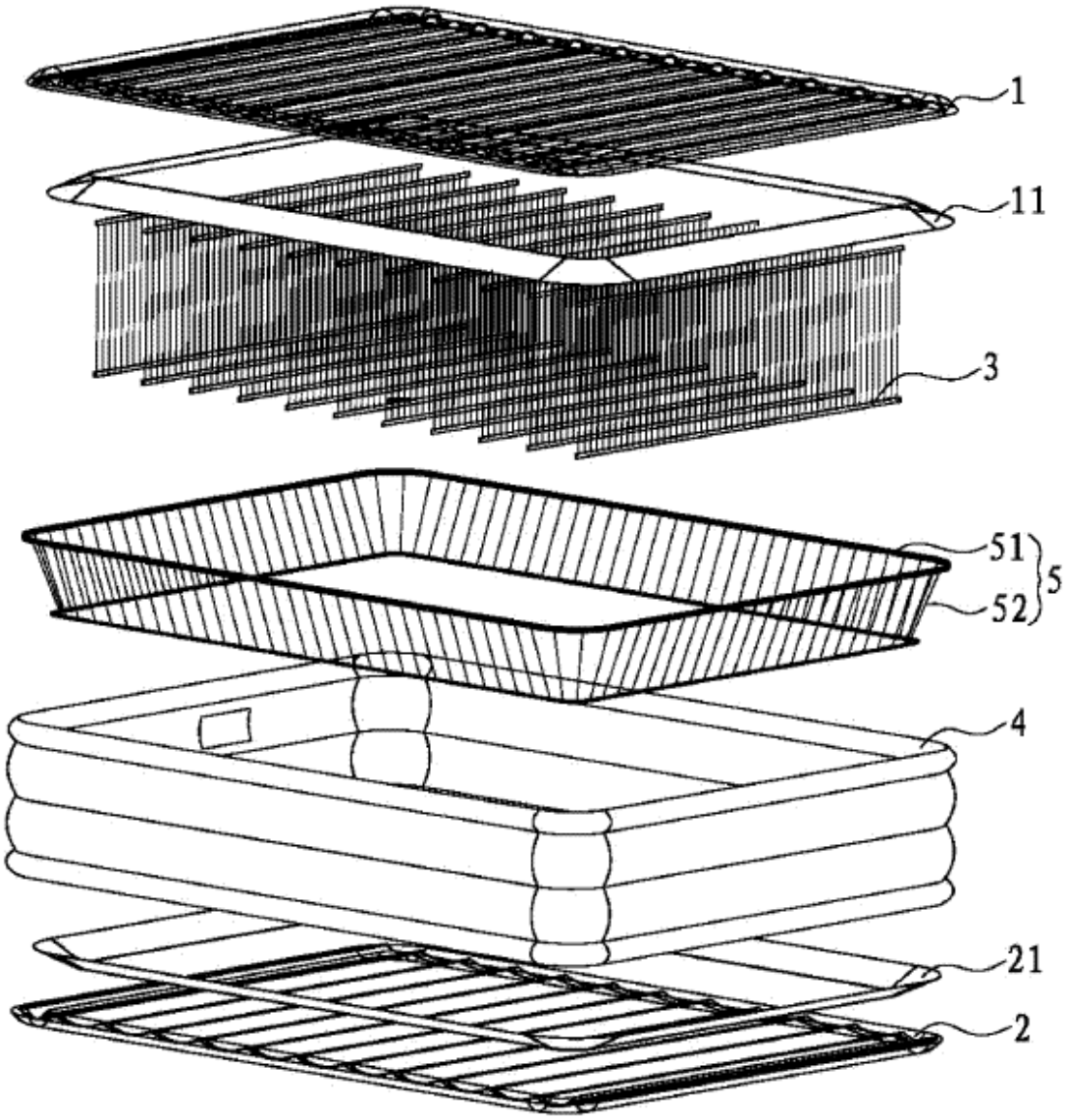

FIG. 5

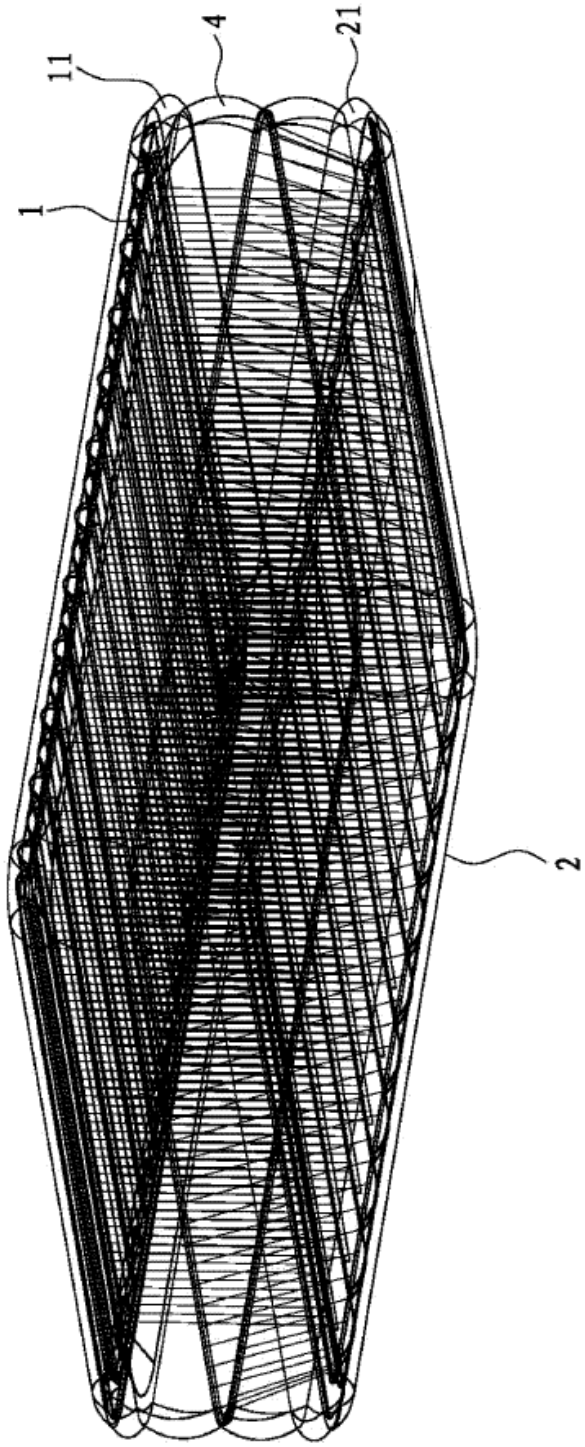

FIG. 6

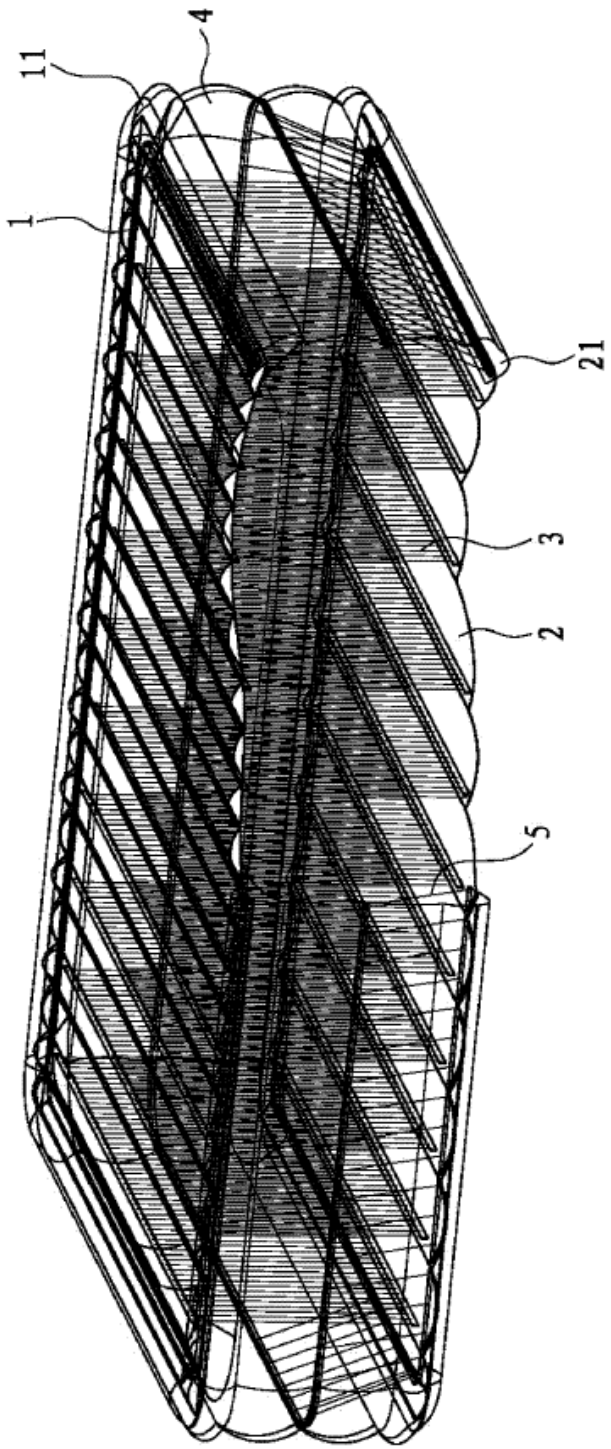

FIG. 7

SOURCE ip

Your global source
for foreign filing services

Certification of Accuracy

I, Qiang Li, hereby declare as follows:

1. I am more than eighteen (18) years of age and I am competent to make this declaration.
2. I am a self-employed translator located at 5 Peach Leaf, North Potomac, Maryland.
3. I possess advanced knowledge of the Chinese and English languages. My qualifications are Ph.D. degree in science, and over 15 years of experience as a translator of technical documents from Chinese to English.
4. The attached translation is to the best of my knowledge and belief, a true and accurate translation from Chinese to English of the document titled, CN203137719 – Lin.
5. I declare that all statements made herein of my own knowledge are true and all statements made on information and belief are believed to be true, and further that these statements were made with the knowledge that willful false statements and the like are punishable by fine or imprisonment or both, under 18 U.S.C. 1001, and that such willful false statements and the like may jeopardize the validity of the application or submission or any registration resulting therefrom.

   I declare under penalty of perjury under the laws of the United States that the foregoing is correct.

Signature of Translator

12/8/2022

Date