US 20150335164A1

(19) United States

(12) Patent Application Publication

(10) Pub. No.: US 2015/0335164 A1

(43) Pub. Date: Nov. 26, 2015

Liu

(54) **INTERNAL SUPPORTS FOR INFLATABLE PRODUCTS**

(71) Applicant: **Bestway Inflatables & Material Corp.**, Shanghai (CN)

(72) Inventor: **Feng Liu**, Shanghai (CN)

(21) Appl. No.: **14/566,075**

(22) Filed: **Dec. 10, 2014**

Related U.S. Application Data

(60) Provisional application No. 62/002,727, filed on May 23, 2014.

Publication Classification

(51) **Int. Cl.**

A47C 27/08	(2006.01)
A63H 33/00	(2006.01)
E04H 4/00	(2006.01)
A47C 4/54	(2006.01)

(52) **U.S. Cl.**

CPC ***A47C 27/081*** (2013.01); ***A47C 4/54*** (2013.01); ***A63H 33/00*** (2013.01); ***E04H 4/00*** (2013.01)

(57) **ABSTRACT**

A tensioning structure for use in inflatable products is provided. The inflatable structure may include a first plastic sheet, a second plastic sheet spaced apart from the first plastic sheet, and an inflatable air chamber defined by the first plastic sheet and the second plastic sheet. A plurality of tensioning structures may be disposed within the air chamber. Each tensioning structure may include a panel made of a single sheet of porous material, a first weld sheet affixed to a first end of the panel and affixed to the first plastic sheet, and a second weld sheet affixed to a second end of the panel opposite the first weld sheet and affixed to the second plastic sheet.

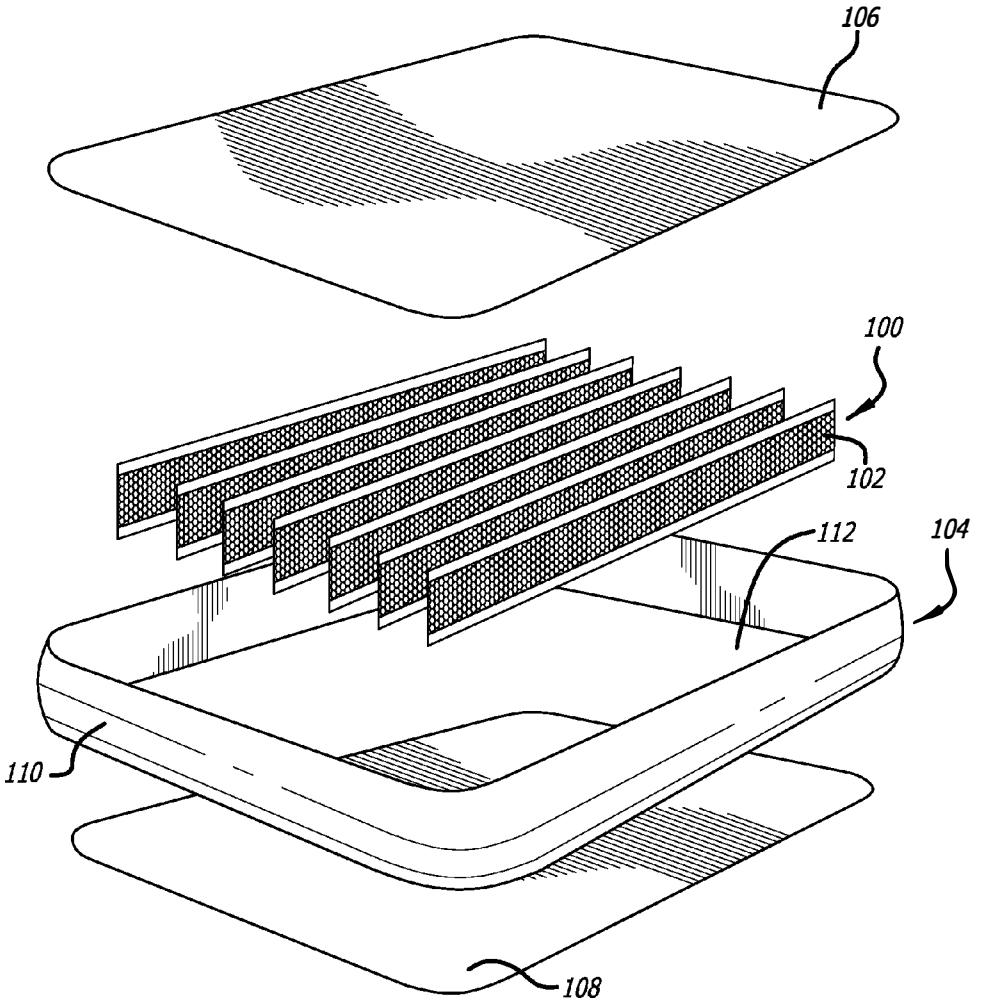

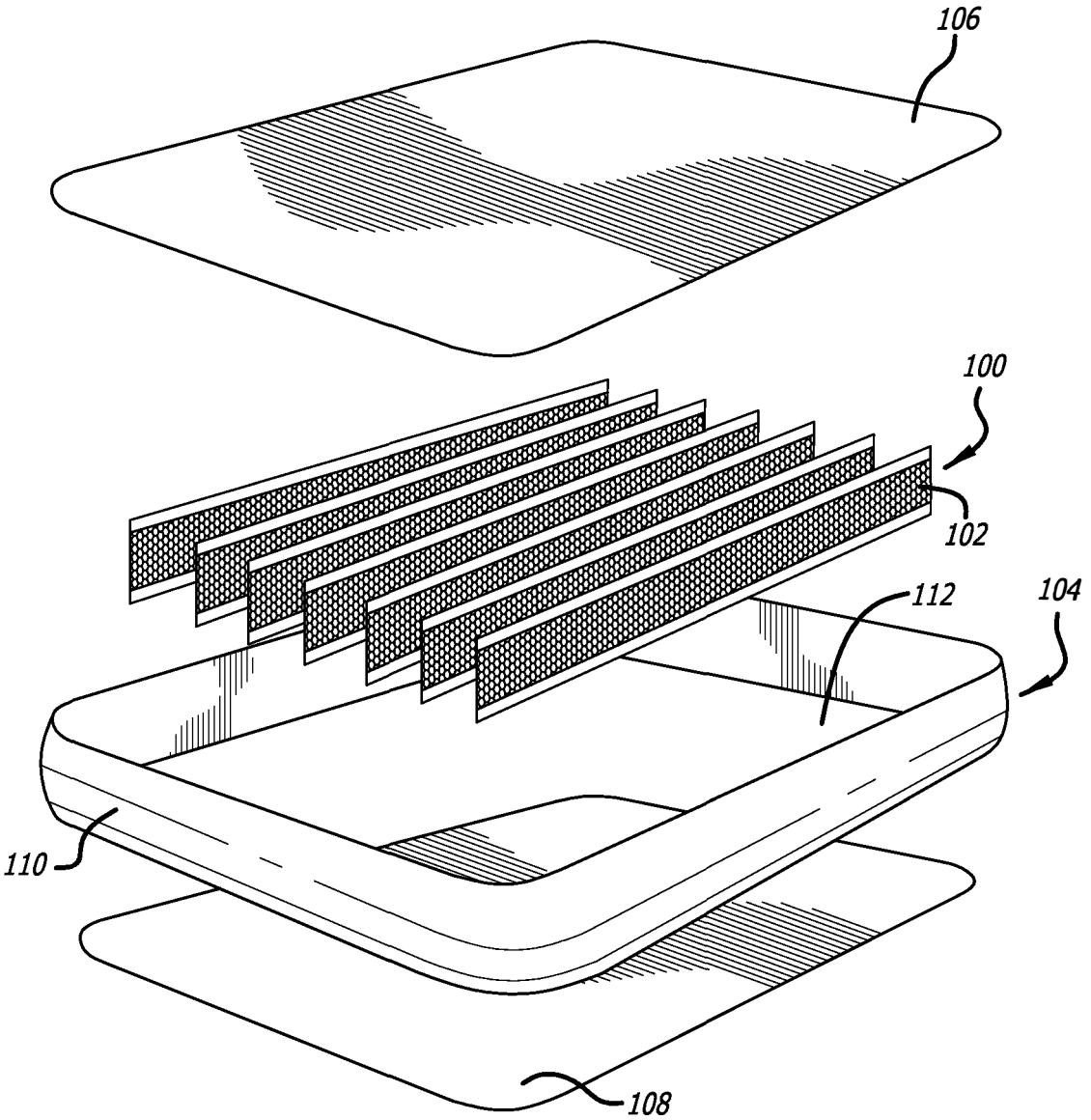

FIG. 1

FIG. 2

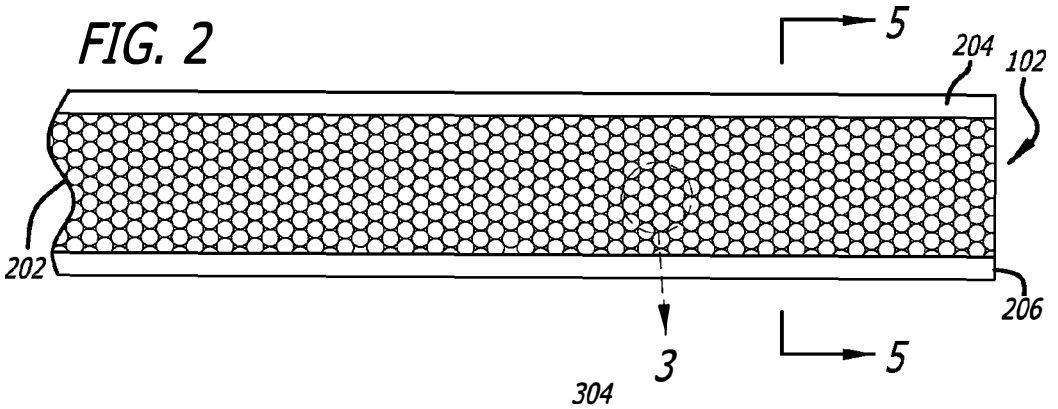

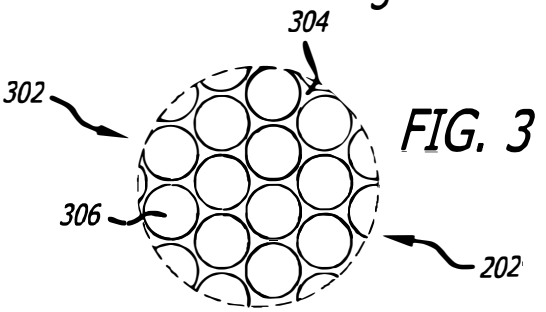

FIG. 3

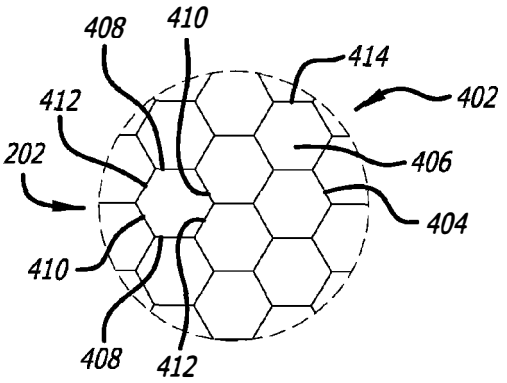

FIG. 4A

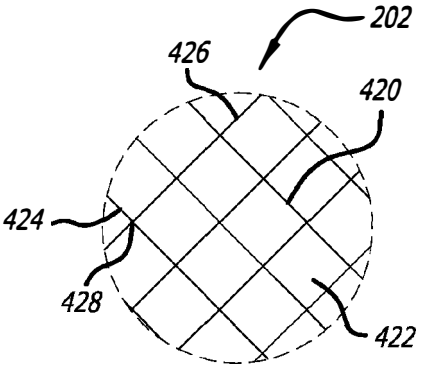

FIG. 4B

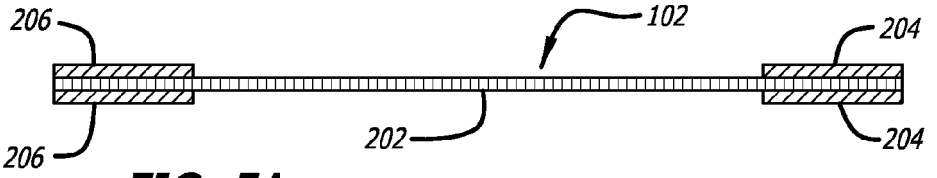

FIG. 5A

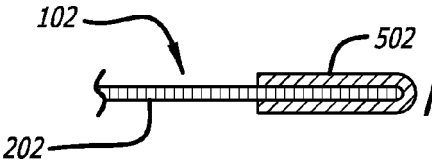

FIG. 5B

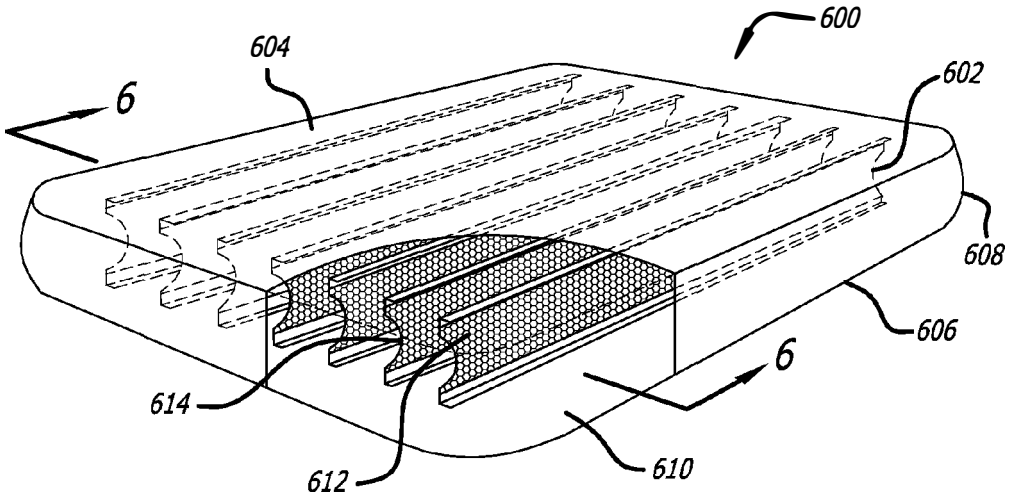
600
604
602
6
608
606
6
614
612
610

FIG. 6A

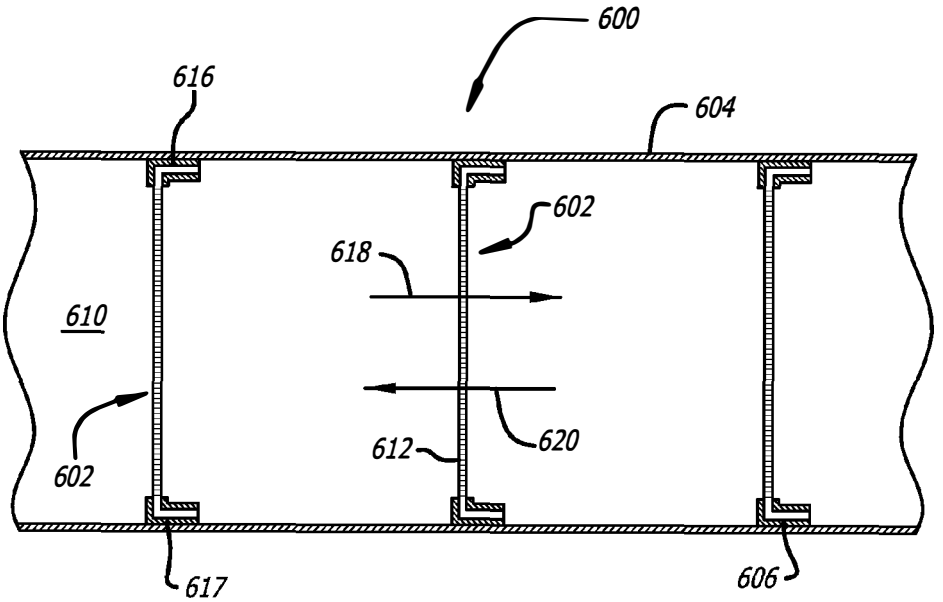
600
616
604
602
618
610
620
612
602
617
606

FIG. 6B

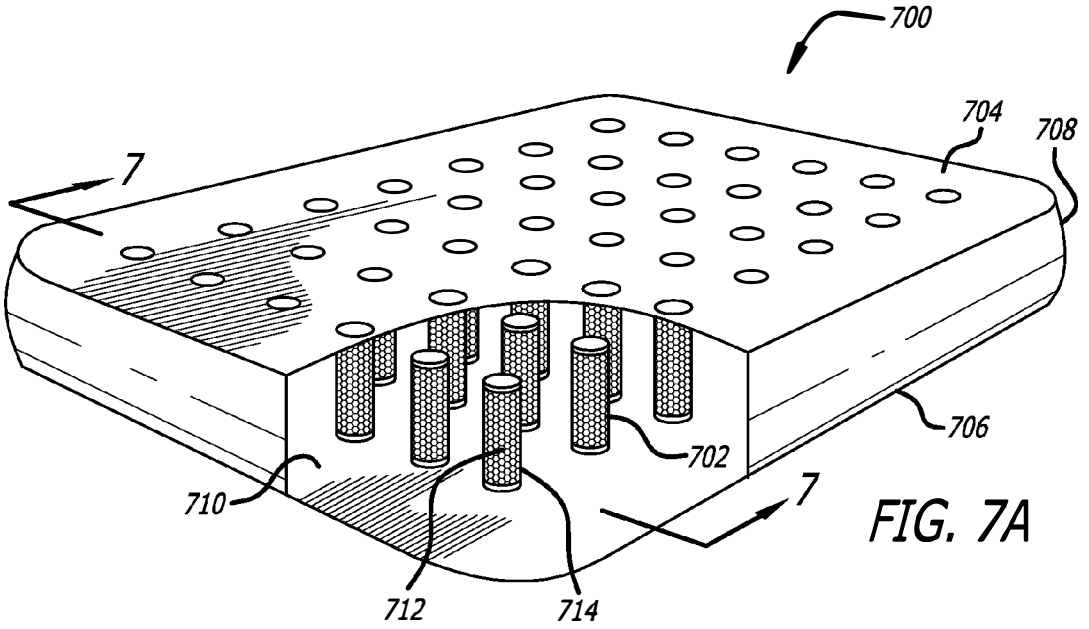

FIG. 7A

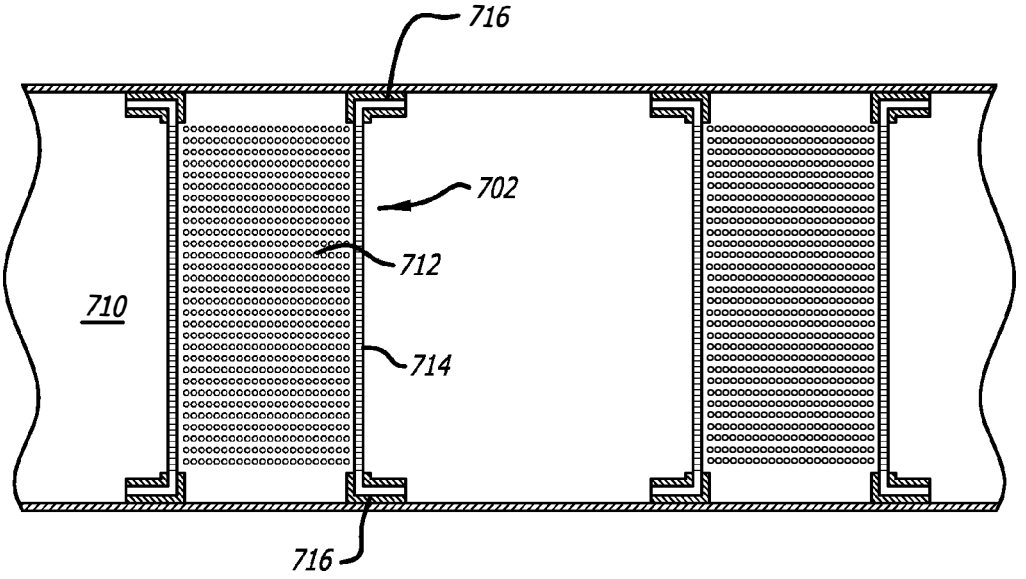

FIG. 7B

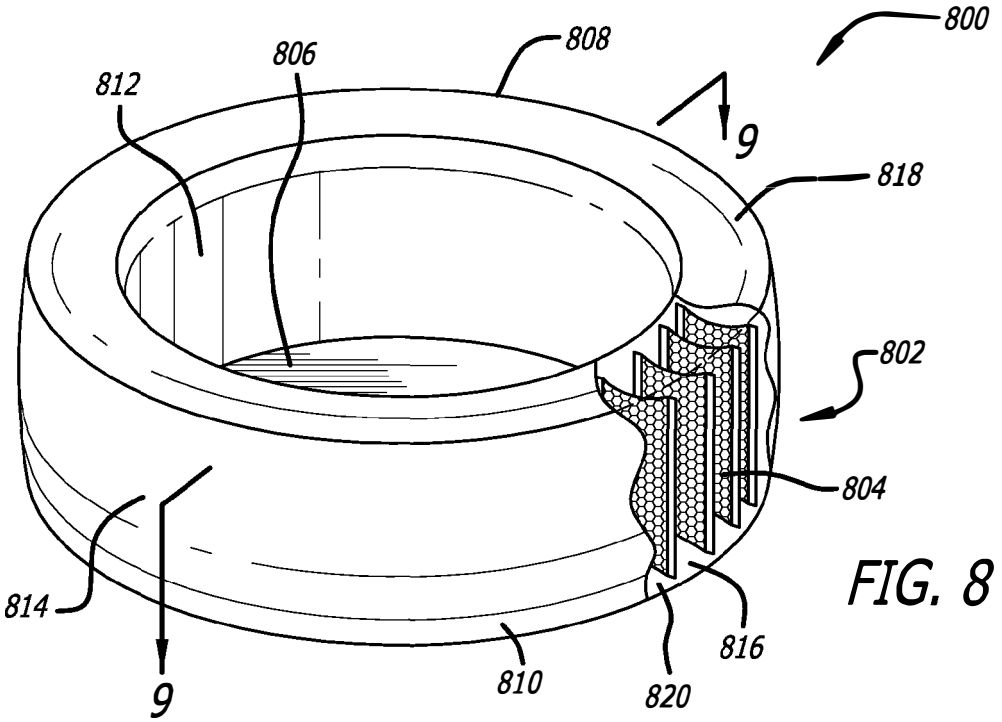
800
808
806
812
9
818
802
804
814
9
810
820
816

FIG. 8

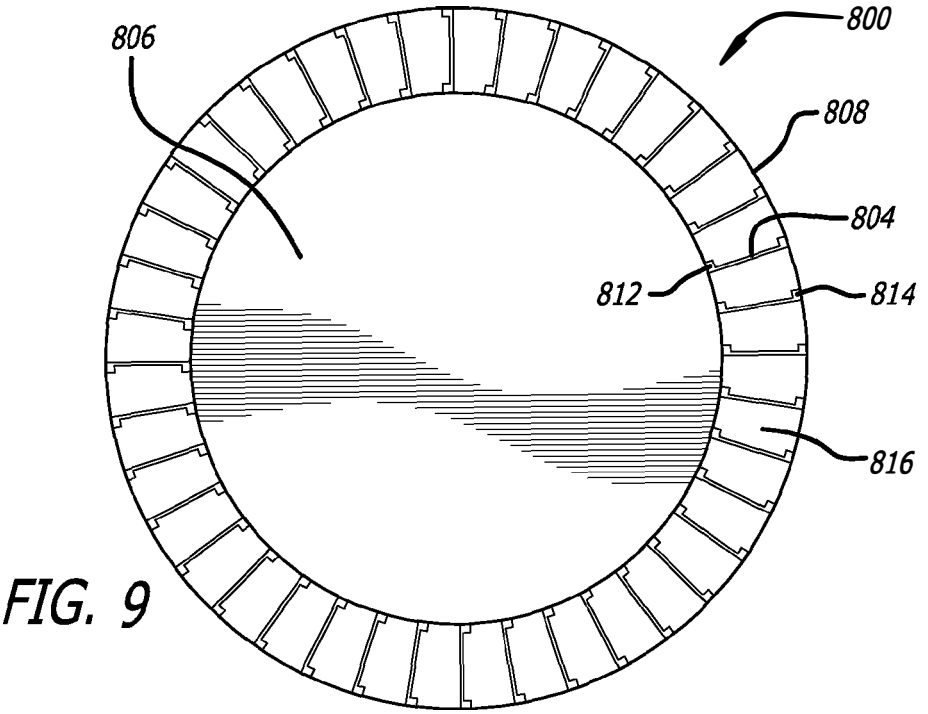
800
806
808
804
812
814
816

FIG. 9

INTERNAL SUPPORTS FOR INFLATABLE PRODUCTS

RELATED APPLICATIONS

[0001] This application claims priority of U.S. application Ser. No. 62/002,727, filed on May 23, 2014, titled INTERNAL SUPPORTS FOR INFLATABLE STRUCTURES, which application is incorporated in its entirety by reference in this application.

BACKGROUND INFORMATION

[0002] 1. Field of Invention

[0003] The present disclosure relates to inflatable products and, in particular, to an inflatable product incorporating a durable tensioning structure that is light in weight and low in cost.

[0004] 2. Background

[0005] Inflatable products such as inflatable toy structures, inflatable beds, inflatable sofas, inflatable pools and the like are well known in the art. Such products are typically light in weight, easy to pack and store, and easy to carry.

[0006] Most inflatable products utilize internal structures in order to form the product into its intended, predetermined shape upon inflation. For example, air beds may incorporate one or more coil-beams or I-beams within the inflatable cavity of the bed. These beams are generally disposed at various locations within the inflatable cavity to shape the bed as the inflatable cavity is pressurized. The beams prevent the air bed from expanding evenly on all sides, similar to that of a balloon. More particularly, in order to maintain the generally rectangular shape of the air bed, these beams may join, for example, upper and lower surfaces of the air bed to one another to restrict their separation during inflation.

[0007] The number and spacing of the beams is proportional to the sharpness of the rectangularity of the inflated product. In other words, the greater the number and/or linear extent of the beams within the inflatable cavity, the "flatter" the bed surfaces become.

[0008] In conventional inflatable products, such as the air beds described above, the beam structures are typically made of plastic or PVC sheets with a sufficient thickness to ensure that external loads are spread and concomitant tensile stresses are reduced in the product material. As such, conventional inflatable structures utilizing plastic beam structures may meet their desired load requirements by varying the thickness of the beams. This contributes to increased weight of the inflatable product. Similarly, an increase in the thickness and/or spatial density of the beams also increases the compressed/folded volume of the deflated inflatable structure.

[0009] Beam structures made of a solid PVC sheet generally are not strong enough to withstand high pressure loads generated during inflation. Such structures are easily deformed once stretched beyond their elastic limit. This contorts the shape and weakens the strength of the inflatable structure. Further, such beam structures may also rip or tear along seams coupling the beam structures to, for example, the upper and lower surfaces of the inflatable structure if the inflatable structure is over-inflated.

[0010] Accordingly, a need therefore exists for a tensioning structure suited for inflatable products that is durable, yet lightweight and easy to manufacture.

SUMMARY

[0011] A tensioning structure for use in an inflatable product is provided. In one example, the inflatable product includes a first sheet, a second sheet disposed opposite the first sheet, where the first sheet and second sheet are spaced apart to define a gap therebetween, and where at least one tensioning structure spans the gap between the first sheet and the second sheet. The tensioning structure may include a panel made of a single sheet of porous material, where the panel includes a first end and an opposing second end. The tensioning structure may further include a first coupling affixed to the first end of the panel, where the first coupling is also coupled to the first sheet, and a second coupling affixed to the second end of the panel, where the second coupling is also coupled to the second sheet.

[0012] The panel may be made of material having an open cell mesh construction. In one implementation, the open cell mesh construction comprises an array of evenly spaced, hexagon-shaped apertures. In another implementation, the open cell mesh construction comprises an array of evenly spaced, circular-shaped apertures.

[0013] The first weld sheet and the second weld sheet may each include a first strip of material affixed to a front surface of the panel and a second strip of material affixed to a back surface of the panel. In other implementations, the first weld sheet and the second weld sheet may each include a single strip of material folded about the ends of the panel such that one end of the strip of material is affixed to a front surface of the panel and the opposite end of the strip of material is affixed to a back surface of the panel. In yet another implementation, the first end of the panel and the second end of the panel may be coated with PVC or other durable material having favorable bonding characteristics to form coating layers that are coupled to the first sheet and the second sheet.

[0014] In a second example, the inflatable product may include a first plastic sheet, a second plastic sheet spaced apart from the first plastic sheet, an inflatable air chamber defined by the first plastic sheet and the second plastic sheet, and a plurality of tensioning structures disposed within the air chamber, where each tensioning structure is coupled between the first wall and the second wall. Each of the plurality of tensioning structures may include a panel made of a single sheet of porous material, a first weld sheet affixed to a first end of the panel and affixed to the first plastic sheet, and a second weld sheet affixed to a second end of the panel opposite the first weld sheet and affixed to the second plastic sheet.

[0015] In a third example, the inflatable product may include a first wall, a second wall spaced apart from the first wall, an inflatable air chamber defined by the first wall and second wall, and a plurality of tensioning structures disposed within the air chamber, where each tensioning structure is coupled between the first wall and the second wall. Each of the plurality of tensioning structures may include a panels made of single sheet of porous material, a first weld sheet affixed to a first end of the panel and affixed to the first sheet, and a second weld sheet affixed to a second end of the panel opposite the first weld sheet and affixed to the second sheet.

[0016] A method for producing an inflatable product is further provided. The method includes the steps of providing a first sheet made of weldable material, and providing a second sheet made of weldable material, where the first sheet is spaced apart from the first sheet to define a gap therebetween. The method further includes the step of providing at least one tensioning structure spanning the gap between the first sheet

and the second sheet, where the at least one tensioning structure includes a tensile sheet made of porous material. The tensile sheet includes a first end and an opposing second end. A first weld strip is applied along the first end of the tensile sheet and a second weld strip is applied along the second end of the tensile sheet, where the first weld sheet is coupled to the first sheet and the second weld sheet is coupled to the second sheet.

[0017] In one implementation, the inflatable product is an air mattress having an upper sheet, a lower sheet, and a side wall. In the implementation, the method further comprises the steps of creating an inflatable chamber defined by the upper sheet, the lower sheet, and the side wall by coupling the side wall to the upper sheet and coupling the side wall to the lower sheet; and providing a valve in communication with the inflatable chamber to facilitate inflation and deflation of the air mattress.

[0018] In another implementation, the inflatable product is an inflatable spa having an inner wall, an outer wall, a top wall, and a bottom wall. In this implementation, the method further includes the steps of creating an inflatable chamber defined by the inner wall, the outer wall, the top wall, and the bottom wall by coupling the inner wall, the top wall, and the bottom wall, and coupling the outer wall to the top wall and the bottom wall; and providing a valve in communication with the inflatable chamber to facilitate inflation and deflation of the inflatable spa.

[0019] Other devices, apparatus, systems, methods, features and advantages of the disclosure will be or will become apparent to one with skill in the art upon examination of the following figures and detailed description. It is intended that all such additional systems, methods, features and advantages be included within this description, and be protected by the accompanying claims.

BRIEF DESCRIPTION OF THE FIGURES

[0020] The present disclosure may be better understood by referring to the following figures. The components in the figures are not necessarily to scale, emphasis instead being placed upon illustrating the principles of the disclosure. In the figures, like reference numerals designate corresponding parts throughout the different views.

[0021] FIG. **1** is an exploded perspective view of one example of an air mattress incorporating a tensioning structure in accordance with the teachings of the present disclosure.

[0022] FIG. **2** is a FIG. **3** is a front view of an I-beam structure **102** incorporated into the air mattress of FIG. **1**.

[0023] FIG. **3** is an exploded view illustrating a circular mesh construction of the I-beam structure of FIG. **2**.

[0024] FIG. **4**A is an exploded view illustrating a skeletal hexagonal cellular mesh construction of the I-beam structure of FIG. **2**.

[0025] FIG. **4**B is an exploded view illustrating a third example of a mesh construction of an I-beam structure in accordance with the teachings of the present disclosure.

[0026] FIG. **5**A is a cross-sectional view of the I-beam structure taken along line **5-5** of FIG. **2**.

[0027] FIG. **5**B is a partial cross-sectional view of a second example of an I-beam structure in accordance with the teachings of the present disclosure.

[0028] FIG. **6**A is a perspective view of a second example of an air mattress incorporating a tensioning structure in accordance with the teachings of the present disclosure.

[0029] FIG. **6**B is a partial cross-sectional view illustrating the construction of the air mattress of FIG. **6**A taken along line **6-6** of FIG. **6**A.

[0030] FIG. **7**A is a perspective view of a third example of an air mattress incorporating a tensioning structure in accordance with the teachings of the present disclosure.

[0031] FIG. **7**B is a partial cross-sectional view illustrating the construction of the air mattress of FIG. **7**A taken along line **7-7** of FIG. **7**A.

[0032] FIG. **8** an exploded perspective view of an example of an inflatable pool incorporating a tensioning structure in accordance with the teachings of the present disclosure.

[0033] FIG. **9** is cross-sectional view illustrating the construction of the inflatable pool of FIG. **8** taken along line **9-9** of FIG. **8**.

DETAILED DESCRIPTION

[0034] FIGS. **1-9** illustrate examples of different implementations of tensioning structures **100** employed in inflatable objects. The tensioning structures give shape to inflatable objects, such as inflatable couches, beds, waterslides, structures, or swimming pools. The tensioning structures are lightweight and occupy minimal volume when the inflatable objects are deflated and packed away, while also functioning as strong and durable internal supports upon inflation and use of the inflatable object.

[0035] An exemplary tensioning structure in accordance with the present disclosure utilizes thin, flexible I-beam structures that join two areas of fabric to one another. The I-beam structures comprise open cell or mesh material and are firmly connected at their ends to adjacent fabric by an intermediate material, such as a strip of plastic. The intermediate material is in turn firmly attached to the fabric. The area of contact between the intermediate material and the I-beam structure may be adjusted to impart a connection strength commensurate with the tensile strength of the I-beam structure. Similarly, the area of contact between the intermediate material and the adjacent fabric may also be manipulated to impart a fabric/tensioning structure connection strength commensurate with the aggregate tensile strength of all of the I-beams comprising the inflatable object.

[0036] Various tensioning structures are described in detail below. It is contemplated that any of the tensioning structures described herein may be used in any inflatable product, either alone, as a group, or in combination with one another as required or desired for a particular design. In addition, it is contemplated that tensioning structures in accordance with the present disclosure can be used in other contexts, such as in camping, recreational, entertainment, amusement, extreme sports, fall-arrest safety and fire rescue equipment, or in any other context where a lightweight, inflatable structure is needed.

[0037] In one exemplary application shown in FIGS. **1-5**B, the tensioning structures **100** may include one or more I-beam support structures **102** incorporated into an inflatable product, such as an inflatable air mattress **104**. The air mattress **104** may include a top sheet **106**, a ground-contacting bottom sheet **108**, and a flexible sidewall **110**. The flexible sidewall **110** may be fixedly connected or welded to the peripheries of the top sheet **106** and the bottom sheet **108** to form an inflatable chamber **112**. Within the inflatable chamber **112**, the I-beam structures **102** may be attached to inner surfaces of the top sheet **106** and bottom sheet **108**. The I-beam structures

102, collectively, form channels that help shape and structurally reinforce the inflatable chamber **112**.

[0038] The top sheet **106**, bottom sheet **108**, and sidewall **110** may be constructed of plastic, polyvinyl chloride (PVC), thermoplastic rubber (TPR), polyethylene vinyl acetate (PEVA), ethylene vinyl acetate (EVA), thermoplastic polyurethane elastomer (TPU), neoprene-coated fabric, or any other suitable material. In some implementations, the top sheet **106** may be overlaid with a layer of fabric, padding, flocking, or other material to provide a sleeping surface for the user. One or more air valves (not shown) may be provided and coupled, for example, to the sidewall **110** for inflating and deflating the inflatable chamber **112**.

[0039] Although air mattress **104** is shown as a single layer, the present disclosure may also apply to mattresses having multiple layers (e.g., double layers). In addition to mattresses, tensioning structures of the present disclosure may be used in other inflatable products such as inflatable boats, inflatable islands, floatation devices, swimming pools, inflatable slides, and any other inflatable devices.

[0040] FIG. **2** is a front view of the I-beam structure **102**. The I-beam structure **102** may be generally rectangular in shape and include a panel **202** made of a material having fibers that form an open cell mesh construction where the cells may be shaped, cut, or otherwise formed into various geometrical shapes. The I-beam structure **102** acts as a retention member, and functions to limit the outward expansion of the top and bottom sheets **106** and **108** (for example, into a balloon shape) when the mattress **104** is filled with air. This type of retention is well known to those skilled in the art of inflatable devices, such as floating devices, air mattresses, and the like. Accordingly, although I-beam retention members are shown herein, other retention members can be used in accordance with the present disclosure, including tufted beam structures, coil-beam structures, X-beam structures, and the like. It is noted that, regardless of the type of retention structure used, the shape and comfort of the inflatable chamber will be directly dependent upon the number of retention structures used therein.

[0041] As illustrated in FIG. **3**, the panel **202** may comprise a circular mesh array **302**. The mesh array **302** may be formed from a plurality of fibers **304** that define a plurality of pores or apertures **306** therebetween. While the apertures **306** are illustrated in FIG. **3** as being circular in shape, in other implementations, the fibers **304** may define a plurality of apertures **306** having other geometric shapes, for example, hexagonal or triangular-shaped apertures **306**. When the mattress **104** (FIG. **1**) is inflated, thereby engaging one or more of the I-beam structures **102**, the fibers **304** may be placed in tension to maintain the shape and prevent over-expansion or "ballooning" of the mattress **104**.

[0042] The fibers **304** may be bundled or arranged in a staggered grid pattern to form a lattice of evenly spaced, circular-shaped apertures **306**. The apertures **306** may be spaced apart and arranged at regular intervals to provide the panel **202** (FIG. **2**) with a substantially constant tensile strength.

[0043] Referring now to FIG. **4**A, the panel **202** may comprise a skeletal hexagonal cellular mesh array **402**. The mesh array **402** may be formed from a plurality of fibers **404** that define a plurality of pores or apertures **406** therebetween.

[0044] The mesh array **402** may include a first set of spaced-apart and parallel fiber members **408**, a second set of spaced-apart and parallel fiber members **410**, and a third set of spaced-apart and parallel fiber members **412**. The first, second and third set of fiber members **408**, **410**, and **412** intersect each other in transverse relation such that, together, they form a plurality of hexagon-shaped apertures **406**.

[0045] The fibers **404** may be bundled or arranged in a staggered grid pattern to form a lattice of, evenly spaced, hexagon-shaped apertures **406**. The fiber members **408**, **410**, and **412** may be spaced apart at regular intervals to provide the panel **202** (FIG. **2**) with a substantially constant tensile strength.

[0046] In some implementations, as shown in FIGS. **3** and **4**A, the fibers **304**, **404** may comprise a cloth or cast screen or mesh of fabric such as cloth, nylon, polyester or other durable material. In other implementations, fiber bundles **414** may be constructed by knotting or weaving together strands of materials such as twine, wire, string, or threads.

[0047] In another example, as shown in FIG. **4**B, the panel **202** may be formed from a plurality of ligaments or frame members **420** that define a plurality of pores or open cells **422** therebetween. The frame members **420** may be arranged in a grid pattern, including a first set of spaced-apart and parallel frame members **424** and a second set of spaced-apart and parallel frame members **426**. In this grid pattern, the first set of frame members **424** is transverse to the second set of frame members **426** such that the first set of frame members **424** intersects the second set of frame members **426** at a junction **428**. In example shown in FIG. **4**A, the first set of frame members **424** intersects the second set of frame members **426** to form a lattice of, evenly spaced, diamond-shaped open cells **422**. Adjacent frame members **420** may be spaced apart at regular intervals to provide the panel **202** with a substantially constant tensile strength. The size and shape of each open cell **422** may vary depending on the thickness and orientation of the surrounding frame members **424**, **426**.

[0048] In some implementations, the frame members **420** may comprise a cloth or cast screen or mesh of fabric such as nylon, polyester or other durable material. In other implementations, frame members **420** may be constructed by knotting or weaving together strands of materials such as twine, wire, string, or threads.

[0049] Turning back to FIG. **2**, each I-beam structure **102** may include weld strips **204** and **206** connected to upper and lower ends of the panel **202**. The upper and lower weld strips **204** and **206** are in turn welded to the top sheet **106** and bottom sheet **108**, respectively, such that forces urging the top sheet **106** and bottom sheet **108** apart are encountered by tension in the open cell structure of the panel **202**.

[0050] FIG. **5**A is a cross section of the I-beam structure **102** taken along line **2-2** of FIG. **2**. As shown, and briefly described above, the structure **102** may be manufactured as a dual layer structure using a pair of weld strips **204** and **206**, both above and below the panel **202**. The weld strips **204** and **206** may comprise relatively thin strips of plastic, PVC, or other durable material. For example, the weld strips **204** and **206** may be constructed to a thickness of 0.20 mm-0.40 mm and a width of 20 mm-40 mm; however, the dimensions of the weld strips may vary depending on the size and inflation pressure of the inflatable product.

[0051] The use of two mutually opposed weld strips **204** and **206** employs a gripping action to "sandwich" the panel **202** therebetween, thereby contributing to a high-strength coupling interface. The weld strips **204** and **206** may be affixed to the panel **202** using suitable coupling techniques, such as radio-frequency (RF) welding, hot-air coupling (e.g.,

melting or welding), adhering (e.g., gluing) or other means known in the art. When implemented in an inflatable product, the resulting dual-layer tensioning structure **100** has improved strength and can be welded to the top sheet **106** and bottom sheet **108**, on either side (see e.g., FIG. **6**B).

[0052] In other implementations, as shown in FIG. **5**B, a single weld strip **502** may be used and folded about the lateral ends of the panel **202** such that one end of the weld strip is affixed to a bottom surface of the panel **202** and the opposite end of the strip is affixed to a top surface of the panel **202**. In another implementation, one end of the weld strip **502** may be affixed to a surface of the panel **202**, while an opposing end the weld strip **502** may be coupled to a corresponding top sheet **106** or bottom sheet **108**. In yet another implementation, the end regions covered by welds strips **204** and **206** in FIG. **2** may, alternatively, be coated by a plastic or PVC coating or coating of another suitable material, thus forming coating layers that may be welded to the top sheet **106** and bottom sheet **108**, respectively.

[0053] FIG. **6**A is a perspective view showing a second example of an implementation of the present disclosure where the tensioning structures includes a number of I-beam structures **602** used in an inflatable structure such as an air mattress **600**. The mattress **600** includes a sleeping surface at top sheet **604**, and a ground-contacting bottom sheet **606**. The mattress **600** further includes a sidewall **608** that is fixedly connected or welded to the peripheries of the top sheet **604** and the bottom sheet **606** to form an inflatable chamber **610**. In this example, the I-beam structures **602** may include an open cell mesh fabric **612** having one or more cut-outs **614** such that air may flow past the ends of structures **602**.

[0054] FIG. **6**B is a cross-sectional view of the air mattress **600** of FIG. **6**A. As shown, weld strips **616** and **617** affixed along the lateral ends of the mesh fabric **612** are bent to a substantially 90° angle at opposite ends of the fabric **612**, such that each lateral end of the I-beam structure **602** may be coupled between the top sheet **604** and the bottom sheet **606** of the air mattress **600** by, for example, sewing, stitching, RF welding, hot-air coupling, adhering, or other means known in the art. Because each I-beam structure **602** is air permeable, due to the open cell structure of the mesh fabric **612**, pressurized air flowing into the inflatable chamber **610** is permitted to freely flow from one portion of the chamber to an adjoining portion of the chamber during inflation or deflation, as illustrated by arrows **618** and **620**. Further, the open cell structure of the mesh fabric **612** provides tension for maintaining the shape of the air mattress **600** as internal pressure increases, thereby preventing the air mattress **600** from expanding evenly on all sides, similar to a balloon.

[0055] FIG. **7**A is perspective view showing a third example of an implementation of the present disclosure where the tensioning structures includes a plurality of coil-beam structures **702** used in an inflatable structure such as an air mattress **700**. In this example, the mattress **700** includes a top sheet **704** and a bottom sheet **706**. The mattress **700** further includes a sidewall **708** that is fixedly connected or welded to the peripheries of the top sheet **704** and bottom sheet **706** to form an inflatable chamber **710**. The coil-beam structures **702** may comprise an open cell mesh fabric **712**.

[0056] FIG. **7**B is a cross-sectional view of the air mattress **700** of FIG. **7**A. As illustrated in FIGS. **7**A and **7**B, the coil-beam structures **702** are arranged in an annular fashion to form a closed columnar structure **714**. Weld strips **716** may be affixed to axial ends of each columnar structure **714** and flared outwards (i.e., bent outwards forming a substantially 90° angle) such that weld strips **716** may be coupled to the top sheet **704** and the bottom sheet **706** of the inflatable mattress **700**.

[0057] FIG. **8** is a perspective view of an inflatable pool **800** incorporating another example of an implementation of the present disclosure. In this example, the tensioning structures **802** may include a plurality of I-beam structures **804**, each having an open cell mesh construction, incorporated into the inflatable pool **800**. The inflatable pool **800** may include a base sheet **806** with a circular edge and an inflatable hollow annular wall **808** coupled thereabout by, for example, sewing, stitching, heat or weld coupling. The wall **808** may comprise a hollow shell having an oval, circular, or rectangular shape or the like. There may be further provided a reinforcing ring-shaped inflatable base member **810** coupled to the bottom end of the wall **808**. The base sheet **806**, annular wall **808**, and base member **810** may be constructed of a gas impervious, heat-sealable plastic material, such as PVC or other water-tight and airtight material. The inflatable pool **800** may further incorporate other components not shown or described herein, such as water pumps, valves, piping, and motors known in the art.

[0058] FIG. **9** is a cross-sectional view taken along line **9-9** of FIG. **8**. As shown both in FIGS. **8** and **9**, the annular wall **808** may include an inner wall **812**, an outer wall **814**, and an interior annular cavity **816**. The interior annular cavity **816** is defined by the spacing between the inner and outer sidewalls **812** and **814** when the pool **800** is inflated. The pool **800** may be inflated through one or more air valves (not shown) formed in one of the sidewalls **812**, **814**.

[0059] Ends of each I-beam structure **804** may be glued, welded, or otherwise adhered to the inner wall **812** and the outer wall **814** of the annular wall **808**, respectively. The I-beam structures **804** may be coupled to the inner wall **812** and the outer wall **814** by an intermediate material, such as the weld strips (i.e., **204**, **206**, **502**, and **716**) described above, or other suitable means. The I-beam structures **804** may extend radially between the inner wall **812** and the outer wall **814** at spaced intervals of, for example, 15° to form a series of I-beam supports around the circumference of the interior annular cavity **816**.

[0060] The open cell mesh construction of the I-beam structures **804** permits air admitted through the air valve to communicate with all points around the circumference of the annular cavity **816**. In some implementations, the I-beam structures **804** may not extend to the top and/or bottom edges **818** and **820** of the annular wall **808** to provide an additional means for air admitted through the air valve to communicate with all points around the circumference of the annular cavity **816**. The I-beam structures **804** provide increased support and strength to the inflated pool **800** so that water of substantial depths can be supported within the pool **800** before the sidewall **812** and **814** deform.

[0061] The open cell mesh construction of the tensioning structures of the present disclosure provide a weight savings over tensioning structures presently used in inflatable products that comprise solid pieces of material. The construction of the fibers comprising the mesh structure enables tension stresses to be distributed more effectively throughout the tensioning structure. Tensioning structures of the present disclosure are capable of withstanding high tension forces and are adapted to maintain the desired shape and structural integrity of the inflatable product even after surfaces of the inflat-

able product have been stretched beyond their elastic limit. Tensioning structures of the present disclosure are simple in structure, easy to manufacture, durable, and low in production cost. Tensioning structures of the present disclosure are, further, capable of withstanding high inflation pressure values; thus providing the support surface(s) of the product with an appropriate hardness to provide support and comfort to the user.

[0062] In general, terms such as "coupled to," and "configured for coupling to," and "secured to," and "configured for securing to" and "in communication with" (for example, a first component is "coupled to" or "is configured for coupling to" or is "configured for securing to" or is "in communication with" a second component) are used herein to indicate a structural, functional, mechanical, electrical, signal, optical, magnetic, electromagnetic, ionic or fluidic relationship between two or more components or elements. As such, the fact that one component is said to be in communication with a second component is not intended to exclude the possibility that additional components may be present between, and/or operatively associated or engaged with, the first and second components.

[0063] The present disclosure may be used in any application where a lightweight, packable structure is needed to join two pieces of material that are urged away from one another in use. Although the previous description illustrates particular examples of various implementations, the present disclosure is not limited to the foregoing illustrative examples. A person skilled in the art is aware that the disclosure as defined by the appended claims and their equivalents can be applied in various further implementations and modifications. In particular, a combination of the various features of the described implementations is possible, as far as these features are not in contradiction with each other. Accordingly, the foregoing description of implementations has been presented for purposes of illustration and description. Modifications and variations are possible in light of the above description.

What is claimed is:

1. An inflatable product comprising:

a first sheet;

a second sheet disposed opposite the first sheet, the first sheet and the second sheet being spaced apart to define a gap therebetween; and

at least one tensioning structure spanning the gap between the first sheet and the second sheet, the tensioning structure comprising:

a panel made of a single sheet of porous material, the panel having a first end and an opposing second end;

a first coupling affixed to the first end of the panel, the first coupling being coupled to the first sheet; and

a second coupling affixed to the second end of the panel, the second coupling being coupled to the second sheet.

2. The inflatable product of claim **1**, wherein the panel is made of material having an open cell mesh construction.

3. The inflatable product of claim **2**, wherein the open cell mesh construction comprises an array of evenly spaced, hexagon-shaped apertures.

4. The inflatable product of claim **2**, wherein the open cell mesh construction comprises an array of evenly spaced, circular-shaped apertures.

5. The inflatable product of claim **1**, wherein the first coupling and the second coupling each comprise a first strip of material affixed to a front surface of the panel and a second strip of material affixed to a back surface of the panel.

6. The inflatable product of claim **1**, wherein the first coupling and the second coupling each comprise a single strip of material folded about the ends of the panel such that one end of the strip of material is affixed to a front surface of the panel and the opposite end of the strip of material is affixed to a back surface of the panel.

7. The inflatable product of claim **1**, wherein the first end of the panel and the second end of the panel are coated with PVC or other durable material having favorable bonding characteristics to form coating layers, wherein the coating layers are coupled to the first sheet and the second sheet.

8. The inflatable product of claim **1**, wherein the at least one tensioning structure is arranged in an annular fashion to form a closed columnar structure.

9. An inflatable product comprising:

a first plastic sheet;

a second plastic sheet spaced apart from the first plastic sheet;

an inflatable air chamber defined by the first plastic sheet and the second plastic sheet; and

a plurality of tensioning structures disposed within the air chamber, where each tensioning structure is coupled between the first plastic sheet and the second plastic sheet, the plurality of tensioning structures comprising:

a panel made of a single sheet of porous material, the panel having a first end and an opposing second end;

a first weld sheet affixed to the first end of the panel, the first weld sheet being coupled to the first plastic sheet; and

a second weld sheet affixed to the second end of the panel, the second weld sheet being coupled to the second plastic sheet.

10. The inflatable product of claim **9**, wherein the panel is made of material having an open cell mesh construction.

11. The inflatable product of claim **10**, wherein the open cell mesh construction comprises an array of evenly spaced, hexagon-shaped apertures.

12. The inflatable product of claim **10**, wherein the open cell mesh construction comprises an array of evenly spaced, circular-shaped apertures.

13. The inflatable product of claim **9**, wherein the first weld sheet and the second weld sheet each comprise a first strip of material affixed to a front surface of the panel and a second strip of material affixed to a back surface of the panel.

14. The inflatable product of claim **9**, wherein the first weld sheet and the second weld sheet each comprise a single strip of material folded about the ends of the panel such that one end of the strip of material is affixed to a front surface of the panel and the opposite end of the strip of material is affixed to a back surface of the panel.

15. The inflatable product of claim **9**, wherein the first end of the panel and the second end of the panel are coated with PVC or other durable material having favorable bonding characteristics to form coating layers, wherein the coating layers are coupled to the first sheet and the second sheet.

16. The inflatable product of claim **9**, wherein the at least one tensioning structure is arranged in an annular fashion to form a closed columnar structure.

17. The inflatable product of claim **9**, wherein the plurality of tensioning structures are spaced apart and arranged substantially parallel to one another.

18. An inflatable product comprising:
a first wall;
a second wall spaced apart from the first wall;
an inflatable air chamber defined by the first wall and the second wall; and
a plurality of tensioning structures disposed within the air chamber, where each tensioning structure is coupled between the first wall and the second wall, the plurality of tensioning structures comprising:
a panel made of single sheet of porous material, the panel having a first end and an opposing second end;
a first weld sheet affixed to the first end of the panel and coupled to the first sheet; and
a second weld sheet affixed to the second end of the panel and coupled to the second sheet.

19. The inflatable product of claim **18**, wherein the panel is made of material having an open cell mesh construction.

20. The inflatable product of claim **18**, wherein the open cell mesh construction comprises an array of evenly spaced, hexagon-shaped apertures.

21. The inflatable product of claim **19**, wherein the open cell mesh construction comprises an array of evenly spaced, circular-shaped apertures.

22. The inflatable product of claim **18**, wherein the first weld sheet and the second weld sheet each comprise a first strip of material affixed to a front surface of the panel and a second strip of material affixed to a back surface of the panel.

23. The inflatable product of claim **18**, wherein the first weld sheet and the second weld sheet each comprise a single strip of material folded about the ends of the panel such that one end of the strip of material is affixed to a front surface of the panel and the opposite end of the strip of material is affixed to a back surface of the panel.

24. The inflatable product of claim **18**, wherein the first end of the panel and the second end of the panel are coated with PVC or other durable material having favorable bonding characteristics to form coating layers, wherein the coating layers are coupled to the first wall and the second wall.

25. The inflatable product of claim **18**, wherein the at least one tensioning structure is arranged in an annular fashion to form a closed columnar structure.

26. The inflatable product of claim **18**, wherein the plurality of tensioning structures are spaced apart and arranged substantially parallel to one another.

27. The inflatable product of claim **18**, wherein the plurality of tensioning structures are radially arranged within the inflatable chamber at spaced intervals.

28. The inflatable product of claim **18**, wherein the first wall is concentric to the second wall.

29. A method for producing an inflatable product, the method comprising the steps of:
providing a first sheet made of weldable material;
providing a second sheet made of weldable material, the first sheet being spaced apart from the first sheet to define a gap therebetween;
providing at least one tensioning structure spanning the gap between the first sheet and the second sheet, the at least one tensioning structure including a tensile sheet made of porous material, the tensile sheet having a first end and an opposing second end;
applying a first weld strip along the first end of the tensile sheet;
applying a second weld strip along the second end of the tensile sheet;
coupling the first weld sheet to the first sheet; and
coupling the second weld sheet to the second sheet.

30. The method of claim **29**, where the inflatable product is an air mattress having an upper sheet, a lower sheet, and a side wall, the method further comprising the steps of:
creating an inflatable chamber defined by the upper sheet, the lower sheet, and the side wall by coupling the side wall to the upper sheet, and coupling the side wall to the lower sheet; and
providing a valve in communication with the inflatable chamber to facilitate inflation and deflation of the air mattress.

31. The method of claim **29**, where the inflatable product is an inflatable spa having an inner wall, an outer wall, a top wall, and a bottom wall, the method further comprising the steps of:
creating an inflatable chamber defined by the inner wall, the outer wall, the top wall, and the bottom wall by coupling the inner wall the top wall and the bottom wall, and coupling the outer wall to the top wall and the bottom wall; and
providing a valve in communication with the inflatable chamber to facilitate inflation and deflation of the inflatable spa.

32. The method of claim **29**, wherein the tensile sheet is made of material having an open cell mesh construction.

33. The method of claim **32**, wherein the open cell mesh construction comprises an array of evenly spaced, hexagon-shaped apertures.

34. The method of claim **32**, wherein the open cell mesh construction comprises an array of evenly spaced, circular-shaped apertures.

35. The method of claim **29**, further comprising the steps of:
coating the first end and the second end of the tensile sheet with PVC or other durable material having favorable bonding characteristics to form coating layers; and
coupling the coating layers to the first sheet and the second sheet.

* * * * *