UNITED STATES PATENT AND TRADEMARK OFFICE

BEFORE THE PATENT TRIAL AND APPEAL BOARD

INTEX RECREATION CORP.
Petitioner

v.

BESTWAY INFLATABLES & MATERIALS CORP.
Patent Owner

U.S. Patent No. 10,687,633
Filing Date: Sept. 29, 2016
Issue Date: June 23, 2020
Title: Inflatable Bed

EXPERT DECLARATION OF BERNHARD KUCHEL

TABLE OF CONTENTS

I. INTRODUCTION AND SUMMARY OF OPINION 1

II. BACKGROUND AND QUALIFICATIONS 3

III. MATERIALS REVIEWED 4

IV. LEGAL STANDARDS 4

- **A.** Claim Construction 5
- **B.** Invalidity 5

V. PERSON OF ORDINARY SKILL IN THE ART 12

VI. BACKGROUND AND STATE OF THE ART 13

- **A.** Inflatable Beds and Tensioning Structures 14
- **B.** Known Problems with Larger Inflatable Beds 21
- **C.** Use of Multiple Tensioning Structures Connecting the Top and Bottom Sheets to the Side Walls of Larger-Height Inflatable Beds 24
- **D.** Use of Lightweight Materials for Tensioning Structures 29

VII. THE ’633 PATENT 29

- **A.** Overview 29
- **B.** Relevant File History 34
  - 1. April 25, 2019 Restriction Requirement and Response 34
  - 2. Non-Patent Literature Filed by Patent Owner from European Patent Office Opposition Proceeding 35
  - 3. October 8, 2019 Non-Final Rejection and Response 36

VIII. CLAIM CONSTRUCTION 40

- **A.** “air holes” 40

IX. SUMMARY OF THE PRIOR ART 43

- **A.** Aoki 43
- **B.** Lin 45
- **C.** The Catalog 48
- **D.** Lin ’773 49

E. Liu 53

F. Liu ’866 56

G. Metzger 60

H. Chung 63

X. THE PRIOR ART DISCLOSES OR SUGGESTS ALL OF THE FEATURES OF THE CLAIMS OF THE ’633 PATENT 65

A. Aoki Discloses or Renders Obvious Claims 1-11 and 17 of the ’633 Patent 65

1. Claim 1 65
2. Claim 2 77
3. Claim 3 79
4. Claim 4 80
5. Claim 5 82
6. Claim 6 83
7. Claim 7 84
8. Claim 8 86
9. Claim 9 88
10. Claim 10 89
11. Claim 11 91
12. Claim 17 93

B. Aoki in view of Lin ’773 Renders Obvious Claims 1-14, 16, and 17 of the ’633 Patent 96

1. Claim 1 96
2. Claim 2 101
3. Claim 3 107
4. Claim 4 108
5. Claim 5 110
6. Claim 6 111
7. Claim 7 112
8. Claim 8 113

9. Claim 9 116
10. Claim 10 117
11. Claim 11 118
12. Claim 12 119
13. Claim 13 121
14. Claim 14 122
15. Claim 16 126
16. Claim 17 128

C. Aoki in view of Lin ’773 and Liu Renders Obvious Claims 15 and 16 of the ’633 Patent 129

1. Claim 15 129
2. Claim 16 134

D. Aoki in view of Metzger Renders Obvious Claim 12 of the ’633 Patent 136

1. Claim 12 136

E. Aoki in view of Lin ’773 and Liu ’866 Renders Obvious Claims 19 and 20 of the ’633 Patent 141

1. Claim 19 141
2. Claim 20 148

F. Lin in view of the Catalog and Metzger Renders Obvious Claims 1-13, 17, 19, and 20 of the ’633 Patent 150

1. Claim 1 150
2. Claim 2 177
3. Claim 3 179
4. Claim 4 180
5. Claim 5 184
6. Claim 6 186
7. Claim 7 190
8. Claim 8 192
9. Claim 9 196

10. Claim 10 198
11. Claim 11 202
12. Claim 12 204
13. Claim 13 207
14. Claim 17 209
15. Claim 19 212
16. Claim 20 217

G. Lin in view of the Catalog, Metzger, and Lin ’773 Renders Obvious Claims 12-14 and 16 of the ’633 Patent 220

1. Claim 12 220
2. Claim 13 226
3. Claim 14 227
4. Claim 16 231

H. Lin in view of the Catalog, Metzger, Lin ’773, and Liu Renders Obvious Claims 15 and 16 of the ’633 Patent 233

1. Claim 15 234
2. Claim 16 238

I. Lin in view of the Catalog, Metzger, and Chung Renders Obvious Claim 20 of the ’633 Patent 241

1. Claim 20 242

XI. CONCLUSION 247

I. INTRODUCTION AND SUMMARY OF OPINION

1. I have been retained by Intex Recreation Corp. ("Petitioner" or "Intex") to provide analysis and expert opinions on various topics, including: (1) an overview of the art related to U.S. Patent No. 10,687,633 ("the '633 Patent") (Ex. 1001), the patent challenged in this proceeding; (2) the level of ordinary skill in the art; and (3) the patentability of claims 1-17, 19, and 20 (the "Challenged Claims") of the '633 Patent. In particular, for the purposes of this declaration, I have been asked to provide an analysis of the scope and content of the '633 Patent relative to the prior art at the time of the '633 Patent's priority date (which I have been asked to assume is January 13, 2016 (hereinafter, the "Priority Date"), and to provide my opinions from the perspective of a person having ordinary skill in this art (which I will refer to as a "POSA").

2. This declaration summarizes the opinions that I have formed to date and is based on personal knowledge, skill, experience, and review of materials read and considered in connection with this opinion. I may modify my opinions if necessary, based on further review and analysis of information provided to me at a later date. If asked to give my sworn testimony in a deposition regarding the contents of this declaration, I will do so.

3. Based on the level of ordinary skill in the art, which I describe in more detail below, it is my opinion that the Challenged Claims of the ’633 Patent are un-patentable based on at least the following separate bases:

Basis	Claims	Statutory Basis	Reference(s)
1.	1-11, 17	§103	JPU-1-1974-034811 (“Aoki”) (Ex. 1004, 1005)
2.	1-14, 16, 17	§103	Aoki in view of U.S. Patent No. 8,562,773 (“Lin ’773”) (Ex. 1009)
3.	15, 16	§103	Aoki in view of Lin ’773 and U.S. Patent Publication No. 2015/0335164 (“Liu”) (Ex. 1015)
4.	12	§103	Aoki in view of U.S. Patent No. 7,089,618 (“Metzger”) (Ex. 1010)
5.	19, 20	§103	Aoki in view of Lin ’773 and U.S. Patent No. 7,269,866 (“Liu ’866”) (Ex. 1011)
6.	1-13, 17, 19, 20	§103	Chinese Patent No. CN203137719 (“Lin”) (Ex. 1006, 1007) in view of the Intex 2014 Comfort Collection Catalog (the “Catalog”) (Ex. 1008) and Metzger (Ex. 1010)
7.	12-14, 16	§103	Lin in view of the Catalog, Metzger, and Lin ’773
8.	15, 16	§103	Lin in view of the Catalog, Metzger, Lin ’773, and Liu
9.	20	§103	Lin in view of the Catalog, Metzger, and U.S. Patent No. 7,346,950 (“Chung”) (Ex. 1012)

4. I reserve the right to supplement this declaration as permitted to address any issues raised by expert(s) engaged by Patent Owner or resulting from

further discovery. Additionally, I reserve my right to supplement this section if new information that would affect the Priority Date becomes available to me.

II. BACKGROUND AND QUALIFICATIONS

5. I earned a Bachelor of Mechanical Engineering with High Honors from The Georgia Institute of Technology in 1986. And I have been working in the field of consumer product development since 1995.

6. More specifically, I have been a lead research and development executive involved in designing, specifying, testing and bringing to market new mattress and foundation technologies for various manufacturers, including mattress manufacturers Simmons Company (1995-2004) and Sealy, Inc. (2005-2008). These designs include conventional bedding products, air inflated mattresses, pneumatic lumbar support systems, air/conventional foam or innerspring hybrid bedding systems, and self-inflating bedding support structures. During my career as a R&D executive, I led and managed teams of engineers and designers, each with specific expertise and tasks suited for various aspects of the problem we were tasked with solving.

7. Since 2008, I have worked as an independent consultant, consulting on various topics, such as product design, process development and manufacturing methodologies, including for inflatable products. Thus, I am very familiar with the design and development process for creating inflatable products.

8. A copy of my curriculum vitae, which describes in further detail my qualifications, employment history, honors, patents, awards, and professional associations is attached to this declaration as **Appendix A**.

9. I am being compensated at a rate of $500 per hour for my work in this matter. I am also being reimbursed for reasonable and customary expenses associated with my work and testimony in this matter. My compensation and reimbursements are not contingent upon the outcome of this matter or the specifics of my testimony. I have no financial interest in the Petitioner. In addition, I have been informed that Patent Owner purports to own the ’633 Patent. I have no financial interest in Patent Owner.

III. MATERIALS REVIEWED

10. I reviewed and considered all of the Exhibits and prior art references I discuss in this Declaration.

IV. LEGAL STANDARDS

11. I have not been asked to offer an opinion on the law; however, as an expert assisting the Board in determining patentability, I understand that I am obliged to follow existing law. I have therefore been asked to apply the following legal principles to my analysis.

A. Claim Construction

12. When performing my analysis, I compared the disclosures in the prior art to the claimed invention in the ’633 Patent, and in particular the Challenged Claims. I understand that, in an *inter partes* review, or “IPR,” filed on or after November 13, 2018, the Board will construe the claim terms in the Challenged Claims using the same claim construction standard that would be used to construe the claim in a civil action under 35 U.S.C. § 282(b). It is my understanding that in construing words and phrases in a claim, those words and phrases are to be given their ordinary and customary meaning to a person having ordinary skill in the art, unless an alternative definition and the inventor’s intent to use the alternative definition are clearly and unambiguously set forth in the patent or its prosecution history. I understand that claim terms are to be construed in the context of the entire patent, including the specification, and that the specification is the single best guide to the meaning of a disputed claim term. I understand that the patent’s prosecution history should also be considered in construing the claims. It is also my understanding that evidence such as expert testimony, technical treatises, and dictionaries may be consulted to determine the meaning of claim language.

B. Invalidity

13. I have been instructed by Intex’s attorneys and, as a result, understand that 35 U.S.C. § 102 (“§102”) provides the standards for determining whether a

claim in a patent is invalid as anticipated by prior art. I also understand that, for purposes of my declaration here (which I understand is being used in conjunction with a petition for IPR), "prior art" may consist of patents or other types of printed publications that were publicly available before the Priority Date. I understand that a claim in a patent is invalid as anticipated under §102 if each and every element of the claim is found expressly or inherently in a single prior art reference.

14. I understand that, when determining whether the single item of prior art anticipates the claims, one must consider not only what is expressly disclosed in that prior art, but also what is inherently present in that prior art. I understand that claim limitations that are not expressly found in a prior art reference are inherent if the prior art necessarily functions in accordance with, or includes, the claim limitations, or if the missing element or feature would be the natural result of following what the prior art teaches to a POSA. I also understand that it is acceptable to examine evidence outside the prior art reference, often referred to as extrinsic evidence, in determining whether a feature, while not expressly discussed in the reference, is necessarily present in the reference. I understand, however, that mere probabilities that an element is present are not enough, but it is not required that persons of ordinary skill actually recognized the inherent disclosure at the time the prior art was first known or used.

15. I understand that 35 U.S.C. § 103 ("§103") provides the standard for determining whether a claim in a patent is invalid as "obvious." I understand that a claim in a patent is invalid as obvious under §103 when the differences between the claimed subject matter and the prior art are such that the claimed subject matter as a whole would have been obvious to a POSA at the time the invention was made. I understand that the relevant inquiry for assessing obviousness consists of the following four factors: (a) the scope and content of the prior art; (b) the differences between the prior art and the claims at issue; (c) the level of ordinary skill in the pertinent art at the time of the invention; and (d) objective factors indicating non-obviousness—sometimes referred to as secondary considerations or indicia.

16. I understand that a prior art reference may be considered in assessing a patent claim's obviousness if the reference discloses solving any problem or addressing any need addressed by the patent, or if the reference discloses information having obvious uses beyond its primary purpose that a POSA would have reasonably examined to solve a problem or address a need addressed by the patent. I understand that when a work is available in one field of endeavor, design incentives and other market forces can prompt variations of it, either in the same field or a different one. I understand that if a POSA would have a reason to implement a predictable variation of claimed subject matter and also would have a

reasonable expectation of success in doing so, §103 likely renders the claim invalid.

17. I understand that an obviousness analysis need not seek out precise teachings directed to the specific subject matter of the challenged claim, for the Administrative Patent Judge and/or the Patent and Trademark Appeal Board can take account of the inferences and creative steps, or even the routine steps, that a POSA would have employed at the time of the alleged invention.

18. I understand that it is often necessary to look to interrelated teachings of multiple prior art references; the effects of demands known to the design community or present in the marketplace; and the background knowledge possessed by a POSA, all to determine whether there was an apparent reason for the POSA to have combined elements in the manner claimed.

19. I understand that any need or problem known in the field of endeavor at the time of the alleged invention and addressed by the patent-at-issue can provide a reason for the POSA to have combined elements in the manner claimed.

20. I understand that a person of ordinary skill attempting to solve a problem will not be led only to those elements of prior art designed to solve the same problem, but also apply common sense teachings.

21. I understand that when there is a design need or market pressure to solve a problem and there are a finite number of identified, predictable solutions, a

POSA has good reason to pursue the known options within his or her technical grasp.

22. I understand that for a reference to be used in an obviousness combination, it must be analogous art to the claimed invention. There are two ways to determine whether prior art is analogous. First, the art can be from the same field of endeavor as the claimed invention. Second, if the reference is not within the same field of endeavor, the reference can still be analogous if it is reasonably pertinent to the particular problem faced by the inventor of the claimed invention such that a person of ordinary skill would reasonably have sought a solution to the problem in that outside field. This problem is not limited to the specific problem the patentee was trying to solve. Instead, any need or problem known in the field and addressed by the patent can provide a reason for combining the elements in the manner claimed. But just because cited references might be analogous to the claimed invention, even sharing the same design incentives as the claimed invention, does not establish that a POSA would necessarily have found it obvious to combine those references.

23. I understand that someone assessing obviousness should be aware of and avoid the potential for distortion caused by hindsight bias and must be cautious of arguments reliant upon *ex post* reasoning. I understand that a party should not imbue a POSA with knowledge of the invention in suit when no prior art reference

or reference of record conveys or suggests that knowledge. If there is no evidence that a POSA would have expected a problem in the field to exist at all, it is not proper to conclude that the invention that solves this problem, which is claimed as an improvement on the prior art, would have been obvious.

24. I understand that when a prior art reference(s) does not recognize or disclose a problem, a POSA has less incentive to attempt to improve upon that reference by combining it with one or more additional references. I further understand that where one or more references each separately function or operate effectively, a POSA would have been less likely to combine the features of both devices into a single device.

25. I understand that the obviousness analysis relates not to whether a POSA *could* have made a claimed invention, but relates to whether a POSA *would* have been motivated to use combinations or modifications of prior art to arrive at the claimed invention.

26. I understand that where an invention would have been "obvious to try," a design need or market pressure to solve a problem, and a finite number of identified, predictable solutions for that problem, must exist. Only then would a POSA have had good reason to pursue the known options within his or her technical grasp, thereby making that invention "obvious to try." I understand that an invention is not "obvious to try," however, where the prior art does not *guide* an

inventor toward a particular solution. I further understand that a POSA must have good reason to pursue the known options within his or her technical grasp.

27. I understand that the greater intervening time between the prior art reference's or references' teaching(s) of separate parts, components, and/or features, and the later combination of those separate parts, components, and/or features increases the likelihood of a finding of nonobviousness.

28. I understand that, before assessing the issue of obviousness, one must also consider certain objective factors—sometimes referred to as secondary considerations or indicia—that, if established, may indicate that the claimed invention may not have been obvious. Such secondary considerations include: (a) Were products covered by the claim commercially successful due to the merits of the claimed invention rather than due to other, unrelated factors, such as, for example, advertising, promotion or marketing, salesmanship, or unclaimed features of the product?; (b) Was there a long-felt but unresolved need for a solution to the problem facing the inventors, which was resolved by the claimed invention?; (c) Did others try, but fail, to solve the problem solved by the claimed invention?; (d) Did others copy the claimed invention?; (e) Did the claimed invention achieve unexpectedly superior results over the closest prior art?; (f) Did others in the field praise the claimed invention or express surprise at the making of the claimed invention?; and (g) Did others accept licenses under the patent-at-issue because of

the merits of the claimed invention? I understand that these factors are only relevant to obviousness if there is a connection, or nexus, between each of them and the claimed subject matter. I understand that, even if one could conclude that some of the above factors have been established, those factors should be considered along with all other available evidence when determining whether the claimed invention would have been obvious to the POSA at the time of the alleged invention. As of the date of this declaration, I am not aware of any documents or information that relate to the "secondary consideration" factors I outlined above and that are pertinent to this matter.

V. PERSON OF ORDINARY SKILL IN THE ART

29. I understand that my opinion of the Challenged Claims of the '633 Patent should be viewed from the perspective of a POSA as of the earliest claimed priority, which I assume to be January 13, 2016. I understand that, to determine the appropriate background of a POSA, the following factors may be considered: (a) the types of problems encountered by those working in the field and prior art solutions thereto; (b) the sophistication of the technology in question, and the rapidity with which innovations occur in the field; (c) the educational level of active workers in the field; and (d) the education level of the inventor.

30. Based on my study of the '633 Patent, the relevant technical field is inflatable products for supporting the human body.

31. In my opinion, a POSA as of the Priority Date would have had at least:

- A bachelor's degree in mechanical engineering, or an equivalent field; or
- An associate's degree in mechanical engineering, or an equivalent field, and two years of practical experience in inflatable product design.

32. A recipient of other academic degrees may qualify as a person of ordinary skill if they have taken coursework or have experience in the pertinent technology. Additional education, such as an advanced degree, could offset less work experience; additional work experience could offset less education or coursework.

33. Although my experience and qualifications exceed those of a POSA, my analysis and opinions herein are based on the perspective of a POSA during the time frame leading up to and including January 13, 2016.

VI. BACKGROUND AND STATE OF THE ART

34. The technical background presented below reflects the state of the art that a POSA would have had knowledge of and understood prior to and at the time of the Priority Date. I rely on, and incorporate as applicable (even if not expressly mentioned below in Section X), the following disclosures and opinions to support

my opinions in this Declaration, including those opinions relating to how the prior art discloses and/or suggests the challenged claims of the ’633 Patent and how and why a POSA would have combined the disclosures and suggestions from that prior art. The concepts below would have been within the knowledge and mindset of a POSA before and as of the Priority Date.

A. Inflatable Beds and Tensioning Structures

35. As the ’633 Patent recognizes, inflatable beds and inflatable mattresses have long been known. (Ex. 1001, 1:19-36.) It was well known as of the Priority Date that inflatable beds typically comprised basic features such as a top sheet (on which a user may lie) and a bottom sheet (contacting the ground), both connected at their outer edges to four side walls (whether separately connected or one integral piece) at an interval to form an air chamber inside. (*See, e.g.*, *id.*, 1:27-32; Ex. 1007, ¶[0021]; Ex. 1010, 4:4-21.)

36. It was also well known before the Priority Date that inflatable beds would comprise means for inflation and deflation such as air pumps (either built-in to the inflatable bed itself or separately connected) and/or air valves through which air may pass into and out of the air chamber. (*See, e.g.*, Ex. 1011, 3:38-44 (“[T]he air bed can be filled up with air once for its whole air-chambers from air-valve 10 via air-holes 41, 51, 81 with a built-in electrical air pump or other air pump.”); Ex. 1012, 1:24-27 (“The present invention provides a modified air mattress, which has

a built-in electric air pump eliminating the need for an external pump."); Ex. 1013, ¶[0051], ("[T]he air mattress 100 further includes an inflating device 160 and a deflating valve 170 respectively disposed on the side wall.").) By the Priority Date, it was known to be advantageous for inflatable beds to be provided with built-in air pumps, as such pumps provided benefits such as (a) user convenience (Ex. 1016, 1:25-28; Ex. 1017, 1:30-40; Ex. 1018, 1:25-33, Fig. 1; Ex. 1019, 1:19-39; Ex. 1020, Fig. 6, 4:1-15); (b) spatial efficiency (Ex. 1019, 4:50-59; Ex. 1021, 2:40-52); (c) increased durability (Ex. 1022, Fig. 1, 1:9-14, 2:123-132, 3:18-22; Ex. 1023, 1:29-31); and (d) cost-efficiency and marketability (Ex. 1017, 1:34-38; Ex. 1018, 1:24-25; Ex. 1020, Fig. 6, 4:1-15).

37. An inherent and long-known issue with inflatable beds is that as the bed is inflated, the surfaces of the bed (top and bottom sheets and side walls) would urge away from each other, tending to form a balloon shape. To address this issue, it was long known that tensioning structures should be used in inflatable beds to join the surfaces of the bed together internally, thereby preventing such surfaces from expanding away from each other and thus taking on a rounded shape. (*See, e.g.*, Ex. 1009, 1:28-41 ("Many inflatable products utilize internal structures in order to form the product into its intended, predetermined shape upon inflation…. These internal tension-band structures disposed in the cavity of the inflatable bed give shape to the bed as internal pressure increases, thereby

preventing the inflatable bed from expanding evenly on all sides in the manner of a balloon."); Ex. 1024, 1:1:51-67 (disclosing "internal connecting members or walls" "fastened to the upper and lower surfaces of the bag" to "prevent [the] bag on inflation from ballooning").)

38. For example, it was well known before the Priority Date that tensioning structures should be disposed within the air chamber of an inflatable bed, whereby the top of such tensioning structures are coupled to the underside of the top sheet, and the bottom of such tensioning structures are coupled to the topside of the bottom sheet, thus preventing the top sheet and bottom sheet from taking on a rounded shape as the bed is inflated. (*See, e.g.*, Ex. 1001, 1:32-34; Ex. 1014, ¶[0005] (noting use in the prior art of "multiple pull rings (A2) and a pull band (A3) … to prevent the inflated mattress (A1) from becoming a spherical shape by maintaining the top and the bottom of the mattress (A1) in parallel to each other"); Ex. 1025, 3:35-49 (disclosing a "plurality of elongated, lateral support structures" that "interconnect interior surfaces 14, 26 of the top and bottom panels 8, 22 within the interior volume 6 of the mattress 2"); Ex. 1009, 2:34-42 (disclosing "a tensioning structure having a gap portion spanning the gap between the first sheet and the second sheet to maintain a spatial relationship between the first and second sheets when the inflatable product is inflated"); Ex. 1026, 5:39-51 (disclosing I-beam structures that "act as retention members and function to limit

the outward expansion of the top and bottom layers 108, 110 of the chamber 120 and to absorb the weight differences created by the user"); Ex. 1015, ¶[0040] ("This type of retention member is well known to one of ordinary skill in the art of inflation devices, such as floatation devices.").) Such tensioning structures could take various forms, such as I-beams, tufted beams, coil-beams, X-beams, pull-rings, columns, or other structures. (*See* Ex. 1009, 8:30-38; Ex. 1015, ¶[0040].)

39. It was also well known before the Priority Date that such ballooning or bulging was not limited to the top and bottom sheets of an inflatable mattress, but affected the side walls as well. Thus, it was well known in the art that tensioning structures should be disposed in the air chamber at an oblique, or diagonal, orientation to join the top sheet with the side walls, and to join the bottom sheet with the side walls, and thus prevent those surfaces from overly expanding away from each other as the mattress is inflated. (*See, e.g.*, Ex. 1011, 2:18-31, 3:45-4:5, Fig. 8; Ex. 1013, ¶¶[0068]-[0069], Fig. 9; Ex. 1025, 1:30-33, 2:53-67, Fig. 3; Ex. 1028, 4:63-5:21, Fig. 7; Ex. 1029, ¶¶[0039]-[0040], Figs. 8B, 8C.)

40. For example, U.S. Patent No. 4,700,419 to Santo ("Santo") (Ex. 1028) discloses an air chamber for use with a "flotation sleep system," comprising "a plurality of tie members 30a, 30b for maintaining the chamber in its rectilinear configuration." (Ex. 1028, 1:11-15, 4:59-63.) As showing in annotated Figure 7

below, Santo discloses that the tie members 30a (red) and 30b (orange) "are respectively interconnected between the inside surface of the exterior marginal perimeter wall 14b" and the upper and lower walls 14d", 14c"":

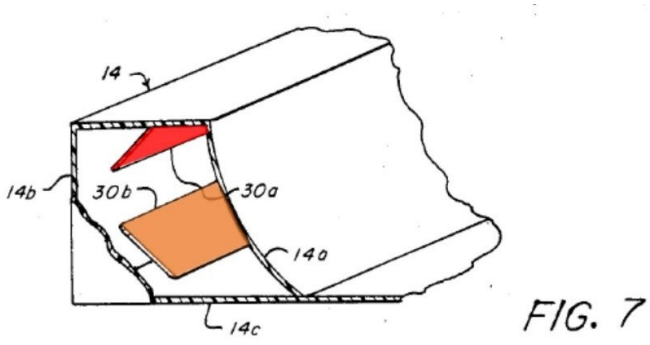

(*Id.*, 4:63-5:1, Fig. 7.) Santo discloses that "the tie members 30a, 30b counteract the forces tending to bow the marginal perimeter wall outwards and maintain the marginal perimeter air chamber 14" in its substantially rectilinear configuration." (*Id.*, 5:16-21.)

41. As another example, as shown in the annotated Figure 8 below, Liu '866 discloses an air mattress comprising "a plurality of oblique extending strips 8" (orange) welded to the bottom sheet and side walls of the mattress:

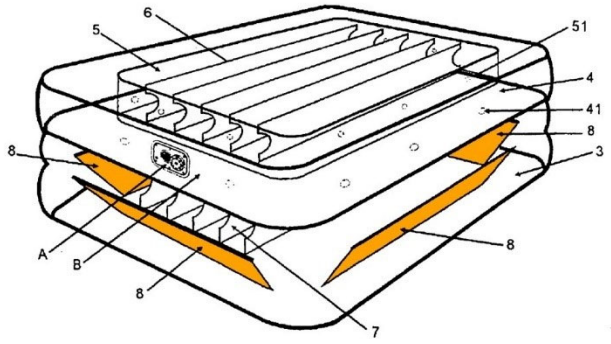

Fig.8

(*Id*., 3:45-4:5; Fig. 8.) Liu '866 discloses that use of oblique extending strips creates a peripheral auxiliary air-chamber that extends beyond the surface of the bottom sheet, thereby enhancing stability of the air bed and preventing potential injury, while providing "a simple structure, lower production costs, and a very beautiful appearance." (*Id.*, 2:18-31.)

42. As another example, as shown in the annotated Figure 3 below, U.S. Patent 7,353,555 to Lau (Ex. 1025) discloses an inflatable mattress having an "internal wall 30" (red) that is "connected to an interior surface 19 of the side panel 16" and "connected to an interior surface 14 of the top panel 8":

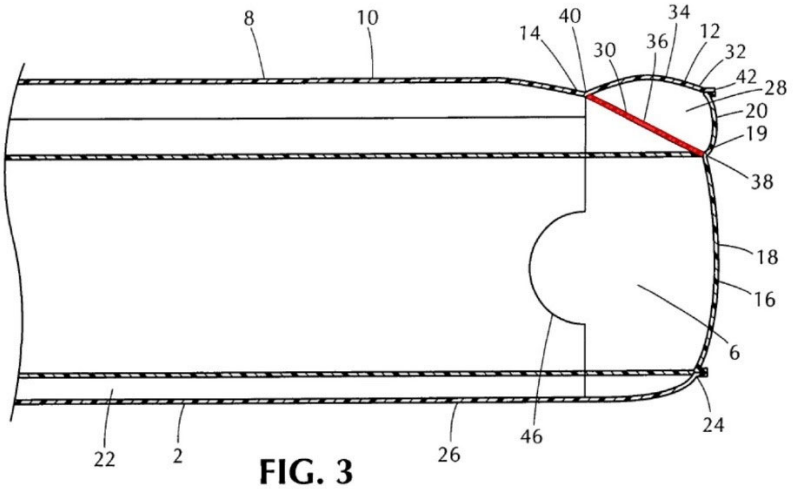

FIG. 3

(Ex. 1025, 2:53-67, Fig. 3.) In this way, the internal wall assists in providing "a frame extending around the periphery of the mattress top that is secured in a manner so that it is flat, smooth and immovable." (*Id.*, 1:30-33.)

43. As another example, as shown in the annotated Figure 3 below, U.S. Patent Publication No. 2008/0078032 to Boyd (Ex. 1029) discloses an inflatable

mattress comprising "secondary support beams 146" (red and orange) connecting the top and bottom layers of the mattress with a beam joined to the sides of the mattress:

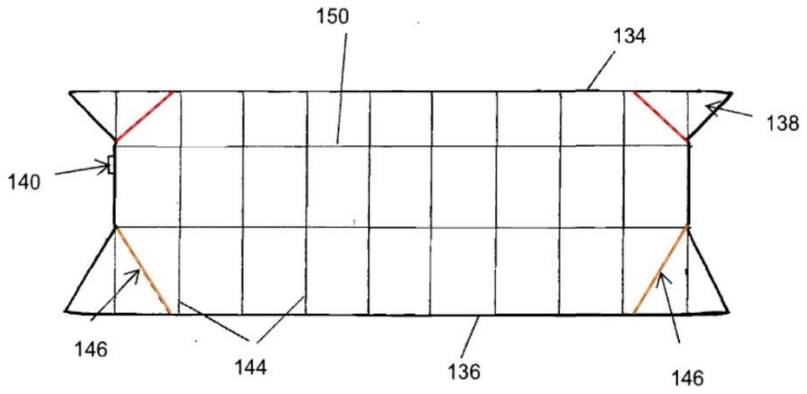

Fig. 8C

(Ex. 1029, ¶¶[0039]-[0040], Figs. 8B, 8C.) Boyd discloses that the secondary support beams 146 are "used to minimize 'bowing out' of the sides 138 of the mattress." (*Id.*, ¶[0039].)

44. As another example, U.S. Patent Publication No. 2013/0145560 to Chen (Ex. 1013) discloses an air mattress comprising an air chamber with "a first peripheral strip 150a, a second peripheral strip 190." (Ex. 1013, ¶[0068].) As shown in the annotated Figure 9 below, Chen discloses that the first peripheral strip 150a (red) is "inclininglyconnected between the side wall 116 and the top wall 112," and the second peripheral strip 190 (orange) is "inclininglyconnected between the side wall 116 and the bottom wall 114":

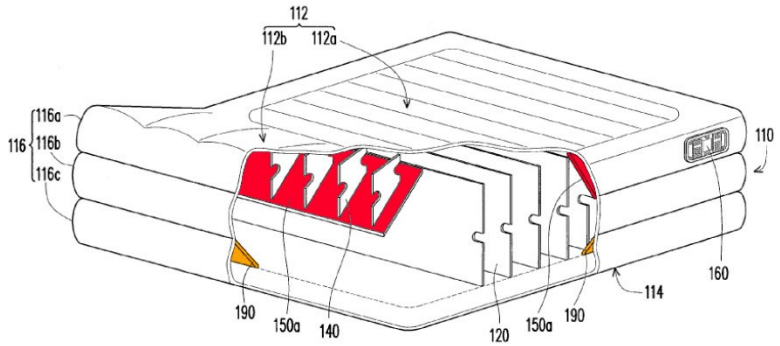

FIG. 9

(*Id.*, ¶[0069], Fig. 9.)

B. Known Problems with Larger Inflatable Beds

45. Starting around the turn of the 21st century, inflatable beds began trending towards air mattresses that more closely simulated the height of a traditional box and spring mattress. (*See, e.g.*, Ex. 1010, 1:45-59; Ex. 1026 (U.S. Patent No. 6,671,910 to Hsu); Ex. 1030 (U.S. Patent No. 6,701,559 to Boso); Ex. 1031 (U.S. Patent No. 6,754,926 to Wang); Ex. 1032 (U.S. Patent Application Publication No. 2005/0076449 to Yuan).)

46. The movement toward taller air mattresses was a response to several design incentives, including aesthetics and comfort. (*See, e.g.*, Ex. 1033, 1:51-53 (explaining the desire to have an "aesthetically pleasing, secure, and comfortable" airbed); Ex. 1030, 1:51-56 (disclosing problems with smaller height inflatable beds, including that "a person sleeping on one of these mattresses still has the perception of sleeping on the floor" and "getting into and out of such a bed can be difficult, especially for an elderly or disabled person.").)

47. It was recognized in the art, however, that such "large height" or "multi-layer" inflatable beds presented a number of problems. First, the larger size of such inflatable beds exacerbated the problems of ballooning or bulging of the outer surfaces, particularly at the periphery of the top, bottom, and sides. (*See, e.g.*, Ex. 1010, 2:6-17 ("Another problem that arises with the use of the known air mattresses, and especially with the double height or two layer air mattresses, is the expansion of the mattress sidewall extended between the top face and the bottom face of the mattress…. This expansion needs to be limited so that the mattress holds its shape and will support the user in a comfortable sleeping position more akin to that of a conventional coil and spring mattress."); Ex. 1005, 1 ("[W]hen air is inserted, the sides of the box-shaped air mattress become rounder on the outside…."); Ex. 1007, ¶[0003] (noting the need in larger height beds "to prevent the periphery of the bed from overly protruding and to provide a supporting force and the shape-keeping strength of the air cavity"); Ex. 1014, ¶¶[0008]-[0010] (stating that the "four corners of the mattress … tend to bulge" and noting the tendency of "protruded deformation on the circumference of the mattress to significantly compromise the resilience and comfort of the mattress as it is directly related to the balanced pressure and stabilizing effect of the mattress"); Ex. 1001, 1:37-41 ("Among the existing inflatable beds and inflatable mattresses, some have a larger height, whereby the side walls of the inflatable beds and inflatable

mattresses after being inflated are susceptible to bulge and deform, affecting the appearance of the inflatable beds and inflatable mattresses.”).)

48. Second, it was known before the Priority Date that the larger height of such inflatable beds led to instability of the bed, which could cause the bed to roll over or a user to fall off the bed, often referred to as “roll off.” (*See, e.g.*, Ex. 1005, 2 (“As a result [of the rounding of the sides], the air mattress may become unstable, making it difficult to sit on and wobble, thus increasing the likelihood that people lying on it will fall off. This tendency becomes greater the higher the sides become.”); Ex. 1026, 1:48-52 (“[I]ncreased height in inflatable bedding results in instability when weight is applied to the periphery of the top surface of the bedding. If a user sits on one corner of the air mattress, the air mattress is likely to tilt up and unsettle any objects and the user off of the mattress.”); Ex. 1030, 2:40-48 (“The shape of the side tends to distort as weight is applied at or near the edge of the support system. Such distortion can cause a person to slip or fall from the support surface…. Obviously, this becomes increasingly significant as the height of the support system is increased.”); Ex. 1001, 1:60-65.)

49. In addition, it was recognized that attempts to address these problems by including a middle layer between the top and bottom sheets were unsatisfactory because they required additional materials, costs, and manufacturing processes. (*See, e.g.*, Ex. 1031, 1:30-35; Ex. 1007, ¶¶[0003]-[0005]; Ex. 1001, 1:47-59.)

50. In addition, it was known that attempts to address these problems by providing a stabilizing tube around the periphery of the inflatable bed were also unsatisfactory because they too required additional materials and cost and were aesthetically unappealing. (*See, e.g.*, Ex. 1011, 1:20-55; Ex. 1001, 1:65-2:3.)

C. Use of Multiple Tensioning Structures Connecting the Top and Bottom Sheets to the Side Walls of Larger-Height Inflatable Beds

51. By the Priority Date, it was recognized that the above-described issues in large-height inflatable beds could be addressed by providing sufficient tensioning structures in the air chamber of the inflatable bed, including multiple tensioning structures coupled to the top and side walls of the mattress, and the bottom and side walls of the mattress, respectively. It was known that this would address the problems of bulging and stability, while avoiding the concerns regarding costs, weight, manufacturing, safety, and aesthetics.

52. For example, Aoki discloses providing multiple "diagonal bracing hanging sheets (10)" at each corner of the air mattress. (Ex. 1005, 2-4.) As shown in annotated Figure 2 below, these diagonal bracing hanging sheets (in red and orange) are adhered at a diagonal or oblique orientation to the upper sheet (blue) and side walls (lengthwise sheets, in green), and to the bottom sheet (blue) and side walls:

FIG. 2

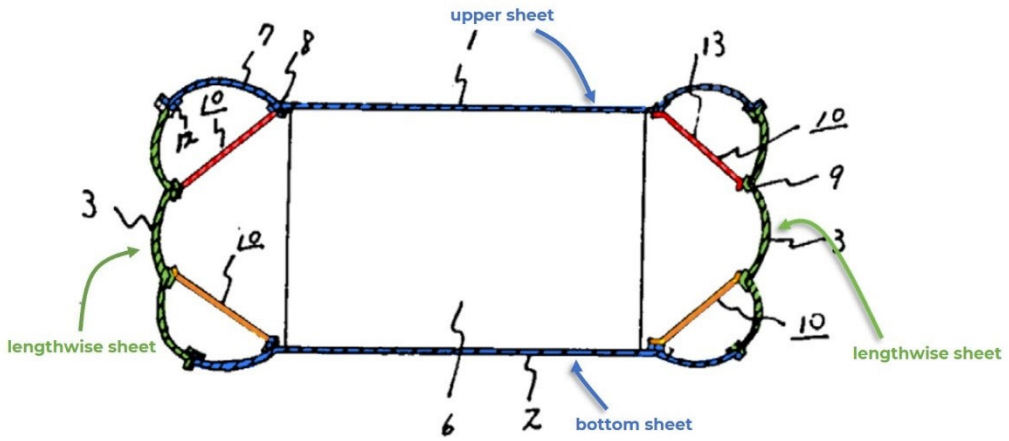

(*Id.*, Fig. 4.)

53. Aoki further states that "[j]ust one diagonal bracing hanging sheet (10) for each corner is insufficient, and it is desirable for two or more diagonal bracing hanging sheets (10) to be placed there." (*Id.*, 4.) This is shown in annotated Figure 4 below:

FIG. 4

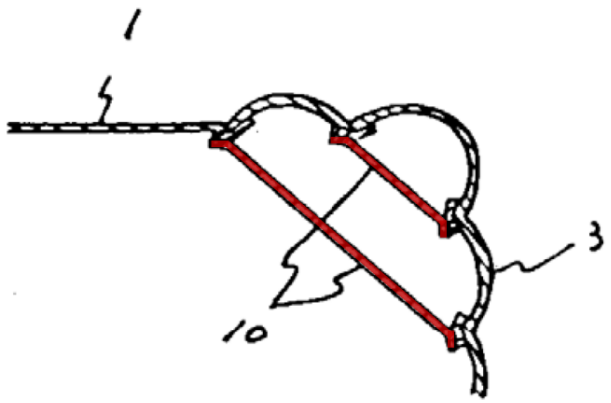

(*Id.*, Fig. 4.) Aoki teaches that "[w]hen performed this way, even for large box-shaped air mattresses, it will be possible to achieve perpendicularity of the peripheral areas." (*Id.*, 4.) In addition, Aoki discloses that with this solution, "the

box-shaped air mattress does not shake and persons lying on it will not fall off. It is extremely stable…. By using the diagonal bracing hanging sheet, no matter how large the box-shaped air mattress, the upper sheet, the lower sheet and the side sheets shall be maintained at an approximate 90-degree angle so it is possible to construct a large box-shaped air mattress." (*Id.*, 5.)

54. As another example and as described above, Chen discloses an air mattress comprising an air chamber with "a first peripheral strip 150a" (red) connected between the top and side walls, and "a second peripheral strip 190" (orange) connected between the bottom and side walls:

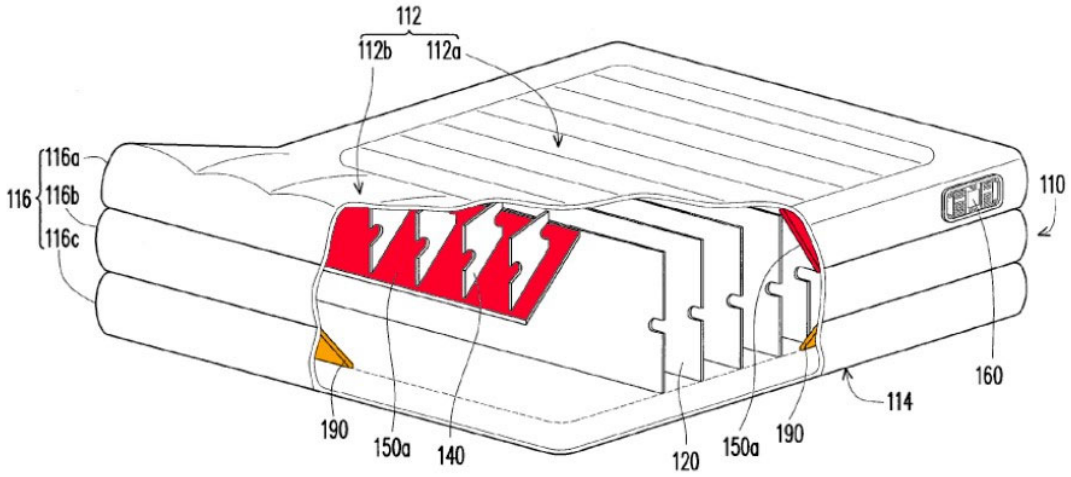

FIG. 9

(Ex. 1013, ¶¶[0068]-[0069], Fig. 9.) Like Aoki, Chen further discloses that the "quantity of the peripheral strip with different heights connected to the side wall is not limited," and that "when more than one peripheral strip is used to respectively surround the side wall and connected to positions of different height, then the air

mattress having the side wall with more-than-three-layered structure can easily be formed." (*Id.*, ¶¶[0067], [0072].)

55. As another example, U.S. Patent Publication No. 2006/0265810 to Wu (Ex. 1014) discloses a "multi-layer inflatable air mattress" comprising multiple "pull band[s] (12)" "to secure the configuration of the mattress" and "solv[e] the problem of deformation at four corners of the mattress." (Ex. 1014, ¶¶[0011], [0023], [0027].) As shown in annotated Figure 3 below, Wu discloses that the upper pull band (12) (red) is joined to the top and side walls of the mattress, and the lower pull band (12) (orange) is joined to the bottom and side walls of the mattress:

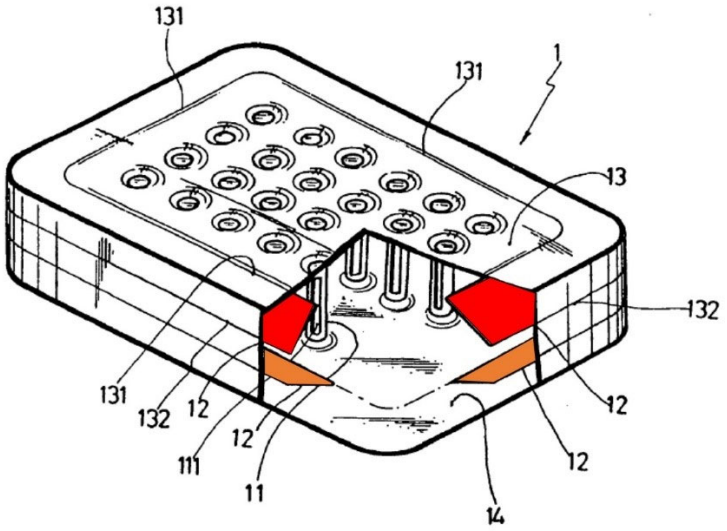

FIG.3

(*Id.*, ¶[0027], Fig. 3.) Wu further discloses that using "two or more" components, including pull bands, "may also find a useful application in other types of

methods" of solving the problem of deformation of the corners of the mattress. (*Id.*, ¶[0028].)

56. As another example and as shown in annotated Figures 5 and 6 below, Metzger discloses an air mattress comprising "at least one side support beam 25" (red and orange) that "extend[s] in the lengthwise direction of at least one of the mattress side panels, or along each one of the side panels of the air mattress":

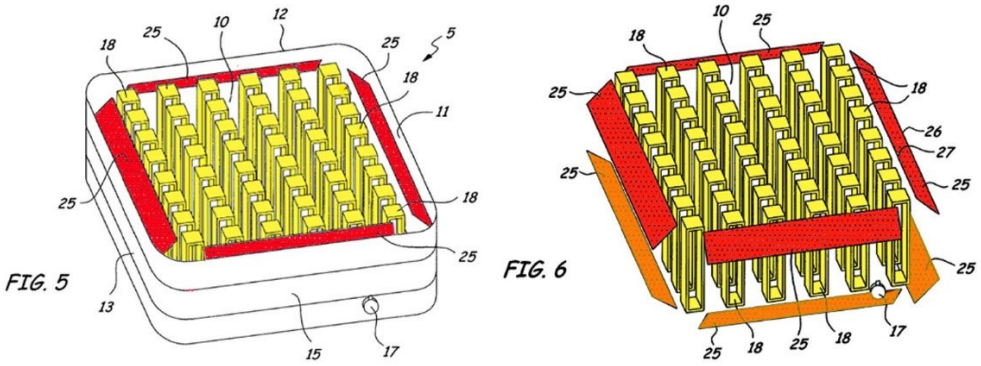

(Ex. 1010, 5:27-30, Figs. 5, 6.) Metzger discloses that the side support beams "act to limit the outward expansion of the side panel(s) of the air mattress to which the side support beams are affixed or otherwise attached in response to the presence of a load placed externally on either one of the first panel or the second panel of the mattress." (*Id*. at 5:54-59.) In addition, Metzger teaches that multiple side support beams could be used to accomplish this purpose. (*Id.*, 5:41-51, 6:10-14, 6:44-47, 8:59-60, 10:3-8.)

D. Use of Lightweight Materials for Tensioning Structures

57. It was further known in the art before the Priority Date that it would be advantageous to make tensioning structures with lighter materials, such as plastic strips disposed on either side of a panel of mesh, threads, or fibers, to minimize costs, weight, and volume of inflatable beds. (*See, e.g.*, Ex. 1009, 1:20-22, 1:53-2:20, 6:50-7:25, 8:30-9:5, 9:52-55; Ex. 1040, ¶¶[0036], [0038]-[0039], [0056]; Ex. 1015, ¶¶[0003], [0006]-[0010], [0034], [0061].)

VII. THE '633 PATENT

58. As further described below, the '633 Patent's apparent claim of novelty is providing a tensioning structure with *two* outside edges coupled to the side walls of an inflatable bed, instead of one. As explained above and further below, this solution was well-known in the art and obvious before the Priority Date.

A. Overview

59. The '633 Patent is directed to "inflatable beds or inflatable mattresses, and more specifically, to an inflatable bed, the structure of which is configured to limit the outward bulging or deformation of a side wall." (Ex. 1001, 1:12-15.) The '633 Patent recognizes that inflatable beds, typically comprising "a top sheet, a bottom sheet, and a side wall coupled to the top sheet and the bottom sheet to form an inflatable air chamber," were known in the art. (*Id.*, 1:27-32.) The '633 Patent

further recognizes that internal tensioning structures "coupled to the top sheet and the bottom sheet" and "disposed in the air chamber" were also used "so as to form a shape having a certain height and a substantially flat upper surface for people to lie on." (*Id.*, 1:32-36.)

60. However, the '633 Patent notes that particularly for "larger height" inflatable beds (i.e., those higher up off the floor), the side walls "are susceptible to bulge and deform, affecting the appearance of the inflatable beds" and "result[ing] in the decay of air pressure in the air chamber, such that the inflatable beds and inflatable mattresses are softened, reducing the comfort of the inflatable beds." (*Id.*, 1:37-46.) In addition, the '633 Patent notes that prior art "large height" inflatable beds also had "a defect in its stability," such that "[w]hen a user lies on or seats near the edge of the inflatable beds," they are "susceptible to roll over." (*Id.*, 1:60-65.) The '633 Patent further notes that attempts to solve these problems by arranging a middle sheet between the top sheet and the bottom sheet have been unsuccessful, and moreover required additional materials and more complicated manufacturing processes. (*Id.*, 1:47-59.)

61. Accordingly, the '633 Patent states that "[t]he technical problem to be solved by the present invention is to provide an inflatable bed, in order to overcome the defects of easy occurrence of bulging and deformation of the side walls of the inflatable beds and inflatable mattresses, poor stability of the inflatable

beds and inflatable mattresses, and susceptibility of roll-over in the prior art." (Ex. 1001, 2:7-12.)

62. As illustrated in annotated Figure 6 below, to address this problem, the '633 Patent discloses an inflatable bed 10 that includes a top sheet 11 (in blue), a bottom sheet 12 (uncolored), at least one side wall 13 (in green), first tensioning structures 14 (in yellow), a second tensioning structure 15 (in red), a third tensioning structure 16 (in orange), and a built-in air pump 20 (in purple):

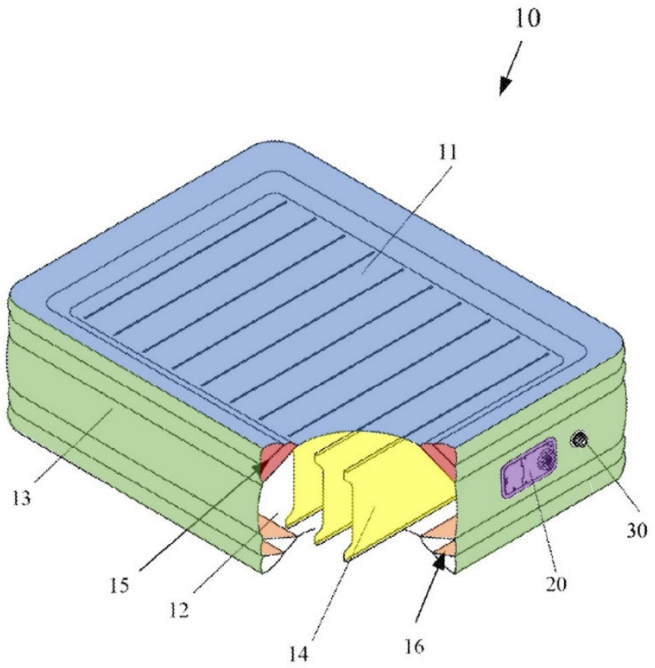

Fig. 6

(Ex. 1001, 6:18-22.) The first tensioning structure 14 (yellow) is coupled to the top sheet 11 and bottom sheet 12 to "limit[] the respective upward and downward bulging of the top sheet 11 and the bottom sheet 12[.]" (*Id.*, 6:28-35.) The second tensioning structure 15 (red) "is configured to limit the upward and lateral bulging

of the top sheet 11 and the side wall 13 after said air chamber is inflated." (*Id.*, 6:52-55.) The third tensioning structure 16 (orange) "is configured to limit the respective downward and lateral bulging of the bottom sheet 12 and the side wall 13 after said air chamber is inflated." (*Id.*, 6:60-63.)

63. As further shown below in annotated Figure 5, the second tensioning structure 15 includes "two first I-beams 151" (red) that are "disposed at an interval" and with "one outside edge 152 of each first I-beams 151 [being] coupled to the side wall 13 adjacent thereto" and "inside edge 153 [being] coupled to the top sheet 11 adjacent thereto":

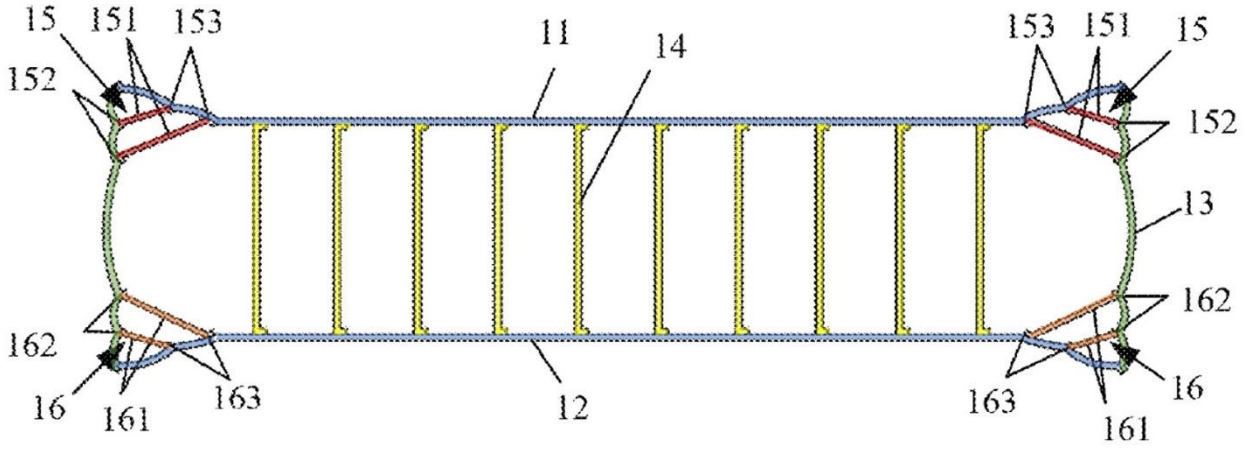

(*Id.*, 6:64-7:2.) Similarly, the third tensioning structure 16 includes "two second I-beams 161" (orange) that are "disposed at an interval" and with "one outside edge 162 of each second I-beam 161 [being] coupled to the side wall 13 adjacent thereto" and "inside edge 153 [being] coupled to the bottom sheet 12 adjacent thereto[.]" (*Id.*, 7:2-7.)

64. Claim 1 is the sole independent claim in the ’633 Patent and recites:

1. An **inflatable bed**, comprising:

a top sheet and **a bottom sheet** disposed vertically at an interval;

at least one side wall, an upper edge of said side wall being coupled to an outer edge of said top sheet, a lower edge of said side wall being coupled to an outer edge of said bottom sheet, an air chamber formed between said top sheet, said bottom sheet and said side wall;

at least one first tensioning structure disposed in said air chamber, an upper end and lower end of said first tensioning structure being respectively coupled to said top sheet and said bottom sheet; and

at least one support structure disposed in said air chamber, said support structure being disposed in an longitudinal direction of at least one of said side walls, at least two outside edges of said support structure being respectively coupled to the side wall adjacent, at least one inside edge of said support structure being coupled to the top sheet or bottom sheet adjacent;

wherein said support structure comprises **a second tensioning structure** and **a third tensioning structure**, at least two outside edges of said second tensioning structure are respectively coupled to said at least one side wall, at least one inside edge of said second tensioning structure is coupled to said top sheet; and

wherein at least two outside edges of said third tensioning structure are respectively coupled to said at least one side wall, at least one inside edge of said third tensioning structure is coupled to said bottom sheet.

(Ex. 1001, cl. 1 (annotations added).)

B. Relevant File History

65. I have reviewed the prosecution history of the application leading to the ’633 Patent, which I understand to be submitted as Exhibit 1003 in this matter. The ’633 Patent issued on June 23, 2020 from U.S. Appl. No. 15/280,513 (“the ’513 Application”), filed on September 29, 2016. (Ex. 1003, Title Page, (21), (22), (45).) The ’513 Application claims the benefit of Chinese Patent Application Nos. CN 201610020533 and CN 201620031074U, both of which were filed on January 13, 2016. (*Id.*, Title Page, (30).)

66. As explained below, the ’633 Patent was allowed after two office actions.

1. April 25, 2019 Restriction Requirement and Response

On April 25, 2019, the Examiner issued a Restriction Requirement, concluding that the pending claims were directed to seven patentably distinct species: (I) Figures 5-8; (II) Figures 9-11; (III) Figures 12-15; (IV) Figures 16-18; (V) Figures 19-20; (VI) Figure 21; (VII) Figures 22-24. (Ex. 1003, 238.) The Examiner stated that Figures 1-4 “appear to be generic to all species,” but that “no claims appear to be generic.” (*Id.*) The Examiner further stated that the applicant was required “to elect a single disclosed species, or a single grouping of patentably

indistinct species, for prosecution on the merits to which the claims shall be restricted if no generic claim is finally held to be allowable." (*Id.*)

67. On June 25, 2019, Patent Owner filed a response and elected to prosecute claims "directed to Species I as represented by Figures 5-8." (*Id.*, 336.) Patent Owner stated that the election was "made without traverse," and withdrew the remaining pending claims. (*Id.*)

2. Non-Patent Literature Filed by Patent Owner from European Patent Office Opposition Proceeding

68. Separately from prosecution of the '513 Application, on June 17, 2019, Intex filed a Notice of Opposition in the European Patent Office ("EPO") against a related European patent assigned to Patent Owner, EP 3192401 ("the EP '401 Patent"). (Ex. 1038, 500-519.) The EP '401 Patent claims priority to the same Chinese applications as the '513 Application, and generally has the same disclosure and claims as the '513 Application. (*Id.*, 22, 38-41.) In its Notice of Opposition, Intex included, *inter alia*, a schematic explaining Lin's disclosure in support of its invalidity arguments related to Lin. (*Id.*, 505.)

69. On August 28, 2019, Patent Owner submitted Intex's Notice of Opposition as part of an Information Disclosure Statement in the prosecution file of the '513 Application. (Ex. 1003, 341, 343.)[1]

3. October 8, 2019 Non-Final Rejection and Response

70. On October 8, 2019, the Examiner issued a non-final rejection of then-pending claims 1-6, 13-16, 23-24, and 32-40. (Ex. 1003, 440-451.) First,[2] the Examiner rejected pending claims 1-6, 13-16, 23, 24, 32, 33, 37, and 38 as being anticipated by Lin. (*Id.*, 443-447.) In support, the Examiner stated that he agreed with the following annotated schematic of Lin, which was included in Intex's Notice of Opposition in the EPO proceeding:

---

[1] The EPO Opposition Division ultimately rejected Intex's Opposition. (Ex. 1038, 900-922.) As explained below, I disagree with the Opposition Division's conclusions regarding Lin. (*Infra*, ¶¶313-318.)

[2] The Examiner also rejected pending claims 4, 15, 16, 23, 37, and 38 for various grammatical errors. (Ex. 1003, 442-443.)

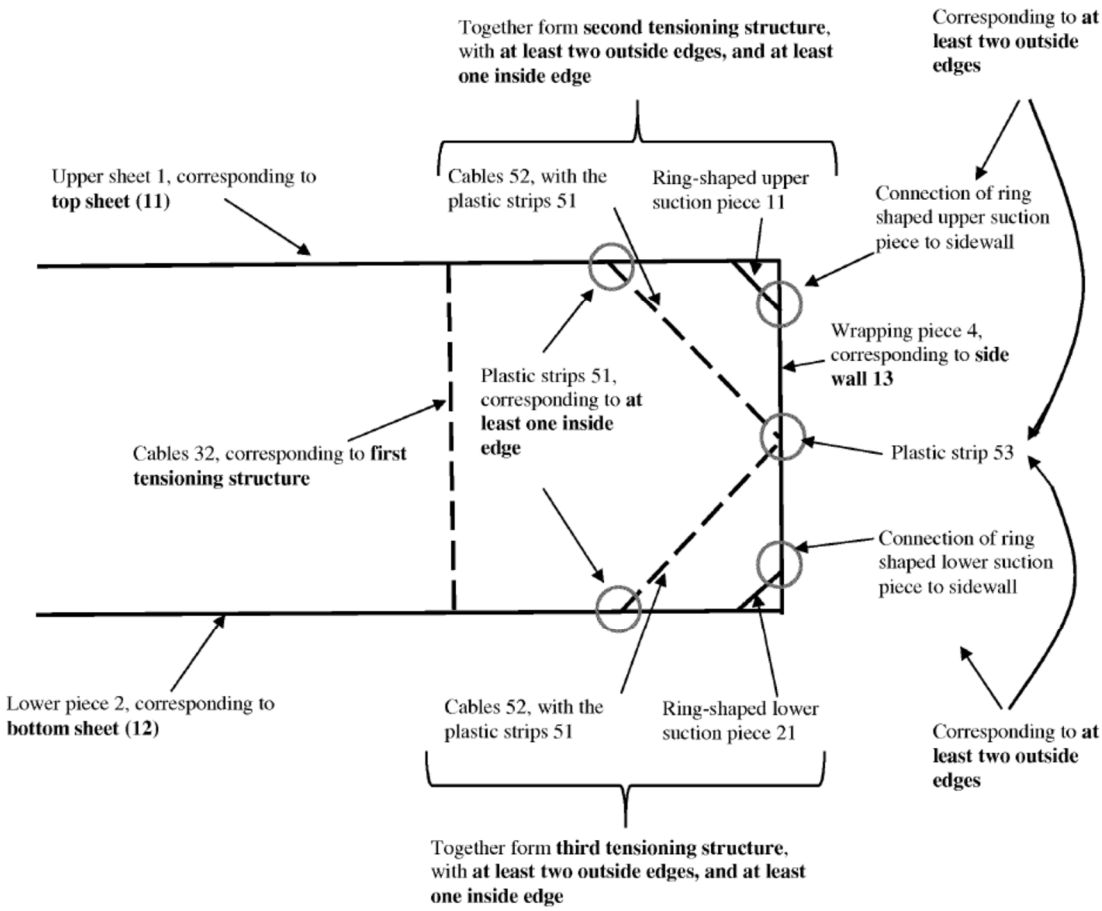

(*Id.*, 444.)

71. Second, the Examiner rejected claims 34-36, 39, and 40—generally corresponding to issued claims 14-16, 19, and 20—as being obvious over Lin in view of the Examiner's Official Notice regarding the knowledge and skill of a POSA. (*Id.*, 448-450.)

72. On January 8, 2020, Patent Owner responded with amendments and arguments purporting to traverse the Examiner's rejections. (*Id.*, 473-487.) Patent Owner amended claim 1 to add the following <u>underlined</u> language:

1. An inflatable bed, comprising:

a top sheet and a bottom sheet disposed vertically at an interval;

at least one side wall, an upper edge of said side wall being coupled to an outer edge of said top sheet, a lower edge of said side wall being coupled to an outer edge of said bottom sheet, an air chamber formed between said top sheet, said bottom sheet and said side wall;

at least one first tensioning structure disposed in said air chamber, an upper end and lower end of said first tensioning structure being respectively coupled to said top sheet and said bottom sheet; and

at least one support structure disposed in said air chamber, said support structure being disposed in a longitudinal direction of at least one of said side walls, at least two outside edges of said support structure being respectively coupled to the side wall adjacent, at least one inside edge of said support structure being coupled to the top sheet or bottom sheet adjacent;

<u>wherein said support structure comprises a second tensioning structure and a third tensioning structure, at least two outside edges of said second tensioning structure are respectively coupled to said at least one side wall, at least one inside edge of said second tensioning structure is coupled to said top sheet; and</u>

<u>wherein at least two outside edges of said third tensioning structure are respectively coupled to said at least one side wall, at least one inside edge of said third tensioning structure is coupled to said bottom sheet.</u>

(*Id.*, 484.)

73. Patent Owner further included an annotated version of Lin's Figure 2 (reproduced below) and represented that Lin discloses an "inflatable bed" that includes: (1) a top sheet 1; (2) a bottom sheet 2; (3) a side wall 4 that "couples to the top sheet 1 and the bottom sheet 2"; (4) a first tensioning structure 3 that "connects to the top sheet 1 and the bottom sheet 2"; (5) a second tensioning structure 52 that "is coupled to the side wall 4 and the top sheet 1"; and (6) a third tensioning structure that "is coupled to the side wall 4 and the bottom sheet 2."

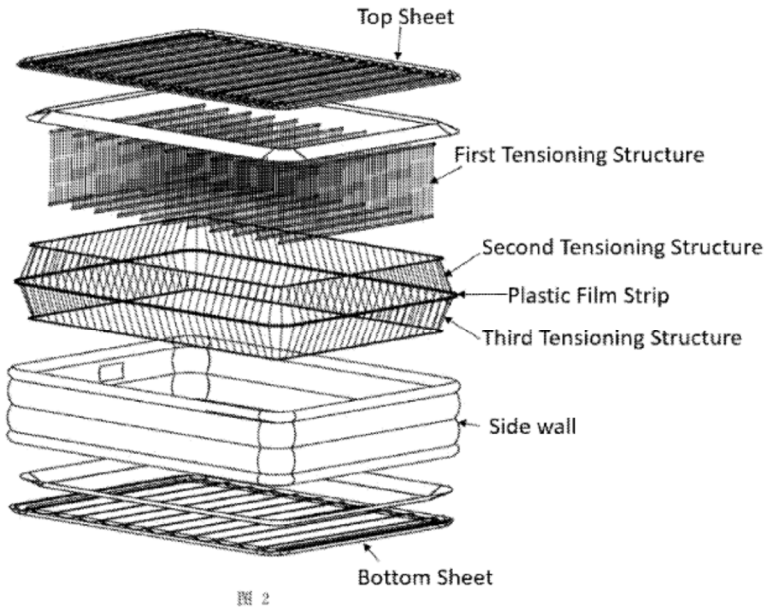

Annotated Figure 2 of Lin

(*Id.*, 484-485.)

74. Notably, Patent Owner's annotated version of Lin's Figure 2 did not address the "upper suction piece 11" and "lower suction piece 21" of Lin. (*Compare* Ex. 1003, 484-485, *with* Ex. 1007, ¶¶[0012], [0025], Fig. 2.) In doing so, Patent Owner asserted that Lin failed to disclose the last limitation added by

amendment as noted above—"wherein at least two outside edges of said third tensioning structure are respectively coupled to said at least one side wall, at least one inside edge of said third tensioning structure is coupled to said bottom sheet." (Ex. 1003, 485.) Patent Owner further argued that the amendment to claim 1 served to overcome the rejections of the dependent claims, without amendment to those claims. (*Id.*, 486.)

75. On February 20, 2020, the Examiner issued a Notice of Allowance. (*Id.*, 489-491.) The Examiner did not provide any substantive reasons for the allowance. (*Id.*)

VIII. CLAIM CONSTRUCTION

76. In view of the claim construction standards articulated above, I provide my opinions regarding how a POSA would understand certain terms in the '633 Patent. For those terms not listed, I have applied the plain and ordinary meaning.

A. "air holes"

77. Claim 2 of the '633 patent recites that the second tensioning structure and third tensioning structure "are respectively provided with a plurality of ***air holes***, through which an airflow passage is formed in said air chamber." (Ex. 1001, 12:66-13:3 (emphasis added).) In my opinion, a POSA would have understood "air holes" as recited in claim 2 in accordance with its plain and

ordinary meaning, that is, "openings through which air may flow." Moreover, a POSA would understand that this would include gaps in a tensioning structure, where individual constituent parts of the structure are not joined, allowing fluid communication throughout the cavity.

78. First, neither the claims nor specification of the '633 Patent give any special or narrow meaning to "air holes." No claims other than claim 2 recite the term, and the specification generally mirrors the claim language without any further description or limitation. (*Id.*, 2:45-48 ("Preferably, said second tensioning structure and said third tensioning structure are respectively provided with a plurality of air holes, through which an airflow passage is formed in said air chamber."), 7:45-50 ("Moreover, the at least two first I-beams 151 are provided with air holes 154, and an airflow passage is formed in said air chamber through the air holes 154. The at least two second I-beams 161 are provided with air holes 164, and an airflow passage is formed in said air chamber through the air holes 164 (as shown in FIGS. 7 and 8)."), 9:16-22, 10:39-44, 12:36-14:41.)

79. Moreover, the specification confirms that gaps in between constituent parts of the second or third tensioning structure fall within the scope of the term. The specification discloses that the second tensioning structure "comprises at least two first I-beams 151" and the third tensioning structure "comprises at least two second I-beams 161." (*Id.*, 6:64-7:7.) The specification goes on to state that the at

least two first I-beams 151 and the at least two second I-beams each "as a whole are of a continuous annular structure or a segmental annular structure." (*Id.*, 7:41-45.) The specification then discloses that the at least two first I-beams 151 "are provided with air holes 154, and an airflow passage is formed in said air chamber through the air holes 154," and the at least two second I-beams 161 "are provided with air holes 164, and an airflow passage is formed in said air chamber through the air holes 164 (***as shown in FIGS. 7 and 8***)." (*Id.*, 7:45-50 (emphasis added).)

80. As shown below, Figure 7 depicts air holes 164 as openings in the two second I-beams 161, and Figure 8 depicts the I-beams as comprising eight separate I-beams which are not joined at the corners of the annular structure:

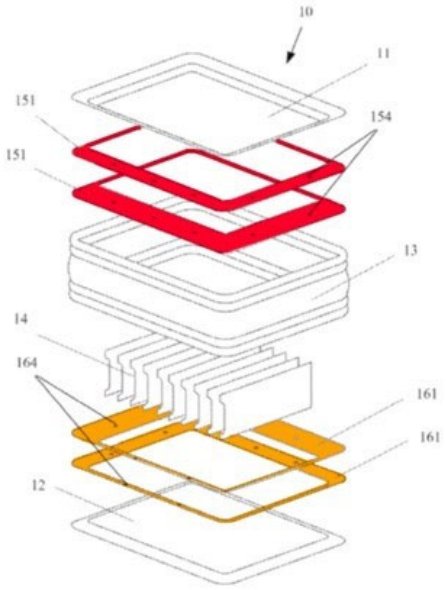

Fig. 7

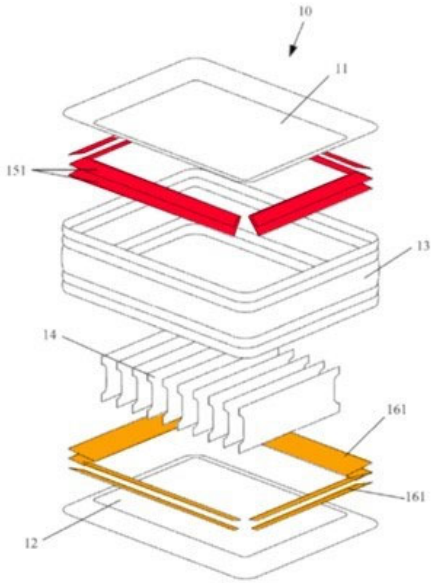

Fig. 8

(*Id.*, Figs. 7, 8; *see also id.*, 9:12-22, Figs. 10 and 11.) Thus, the specification confirms that both of these structures would fall within the scope of claim 2's

recitation of second and third tensioning structures provided with a plurality of "air holes."

81. Finally, "openings through which air may flow" accords with the plain and ordinary meaning of "hole." (Ex. 1035, 3 (defining "hole" as "an opening through something"; "an area where something is missing").)

IX. SUMMARY OF THE PRIOR ART

A. Aoki

82. Aoki issued on June 28, 1972. (Ex. 1005, 0.) I understand that Aoki is thus prior art to the '633 Patent.

83. Aoki is directed to a "box-shaped air mattress." (*Id.*, 0, 1-2.) Aoki notes that existing air mattresses are comprised of top, bottom, and side sheets, with "vertical hanging sheets" adhered between the top and bottom sheets at a designated height. (*Id.*, 1.) Aoki identifies a number of problems with this design, especially for larger air mattresses that are higher off the ground. First, Aoki notes that "when air is inserted, the sides of the box-shaped air mattress become rounder on the outside than the inside…., and the upper and bottom layers create an arch shape." (*Id.*, 1.) As a result, "the air mattress may become unstable, making it difficult to sit on and wobble, thus increasing the likelihood that people lying on it will fall off." (*Id.*, 2.) Aoki notes that "[t]his tendency becomes greater the higher the sides become." (*Id.*)

84. To address these problems, Aoki discloses providing, in addition to vertical hanging sheets attached to the top and bottom sheets of the air mattress, multiple "diagonal bracing hanging sheet[s] (10)" at each corner of the air mattress. (*Id*., 2-4.) As shown in annotated Figure 2 below, these diagonal bracing hanging sheets (in red and orange) are adhered at a diagonal or oblique orientation to the upper sheet (blue) and side walls (lengthwise sheets, in green), and to the bottom sheet (blue) and side walls:

FIG. 2

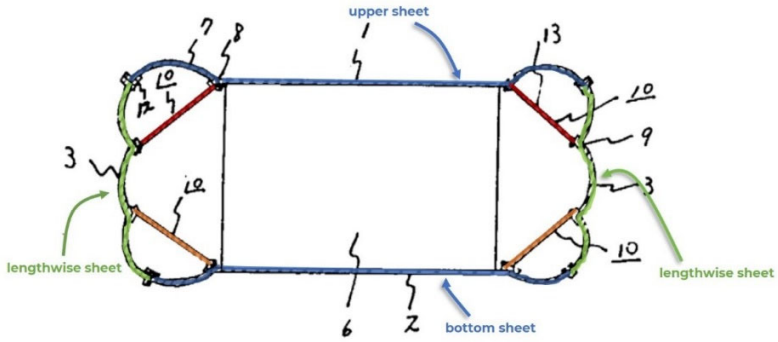

(*Id.*, Fig. 2.)

85. Aoki further teaches using ***two or more*** diagonal bracing hanging sheets for each corner of the air mattress, as shown in annotated Figure 4 below:

FIG. 4

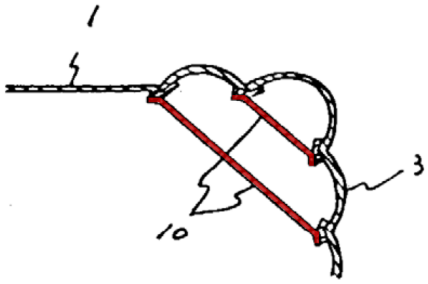

(*Id.*, Fig. 4.)

86. Aoki discloses that use of multiple diagonal bracing hanging sheets in this way addresses the known problems regarding larger air mattresses identified above. Because the diagonal bracing hanging sheets will tense when the air mattress is inflated, the upper, bottom, and side sheets will remain roughly perpendicular with each other, thereby preventing these sheets from "swell[ing] and form[ing] an arch." (*Id.*, 3-4.) This prevents shaking and enhances stability of the air mattress, and prevents a user from falling off the mattress while sleeping. (*Id.*, 5.) In addition, the design improves aesthetics by "placing an accent on the surface of the box-shaped air mattress." (*Id.*)

87. Aoki is in the same field as the '633 Patent because Aoki relates to inflatable mattresses and the components of such mattresses. (*Id.*, 1-2.) Aoki is pertinent to the problems the '633 Patent purportedly addresses because Aoki is directed to preventing bulging, increasing stability, and improving aesthetics of larger height air mattresses. (*Id.*, 1-2, 4-5.) Aoki therefore is analogous art to the '633 Patent.

B. Lin

88. Lin issued on August 21, 2013. (Ex. 1007, Title Page, (45).) I understand that Lin is thus prior art to the '633 Patent.

89. Lin is directed to large-height inflatable beds that are "as high as . . . a normal bed." (Ex. 1007, ¶[0002].) Like Aoki, Lin recognizes problems with such

large-height inflatable beds, including the needs for stability and prevention of protrusion of the periphery of the bed. (Ex. 1007, ¶¶[0002], [0006].) Lin further identifies disadvantages to conventional inflatable beds incorporating a middle sheet between the top sheet and bottom sheet, including increased weight, material costs, and production costs. (*Id.*, ¶¶[0004]-[0006].)

90. To address these problems, Lin discloses providing, in addition to "drawbelts 3" attached to the top and bottom sheets of the airbed, a "side wrapping belt 5" comprised of a plurality of cables and plastic strips, and "ring-shaped" upper and lower "suction pieces" 11 and 21. (*Id.*, ¶¶[0022]-[0025].) As shown in annotated Figure 2 below, the side wrapping belt and suction pieces (in red and orange) are connected at an oblique or diagonal orientation to the upper sheet ("upper piece 1," blue) and side walls ("wrapping piece 4", in green), and to the bottom sheet ("lower piece 2," blue) and side walls, respectively:

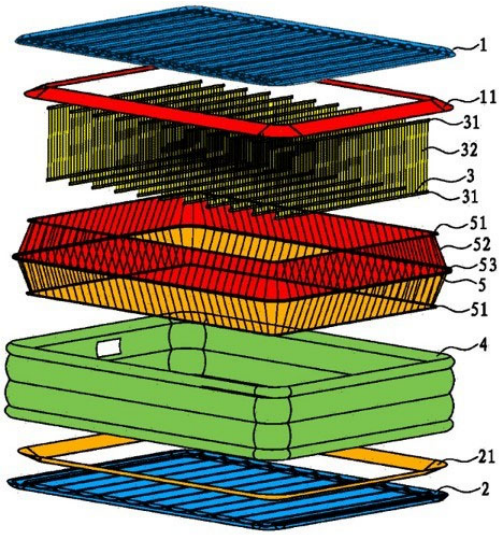

图 2

(*Id.*, Fig. 2.) Lin further discloses that the drawbelts 3 (yellow above) and side wrapping belt 5 "are not limited to the structure of the plastic strips and the plurality of cables, and that they can alternatively be implemented with a linear drawbelt or a cylindrical drawbelt of an integral plastic piece as long as they satisfy the requirements of the internal pressure of the inflatable product." (*Id.*, ¶[0028].)

91. Lin discloses that "[w]ith the above solutions, the utility model not only prevents the wrapping piece from overly protruding to affect the strength and appearance of the product but also effectively reduces the material cost and production cost, by the side wrapping belt provided connecting the middle of the wrapping piece of the inflatable product and the upper piece or/and lower piece so as to achieve a traction and position restriction on the middle of the wrapping piece of the inflatable product with a relatively large height." (*Id.*, ¶[0013].)

92. Lin is in the same field as the '633 Patent because Lin relates to inflatable mattresses and the components of such mattresses. (*Id.*, ¶¶[0001], [0022]-[0025].) Lin is pertinent to the problems the '633 Patent purportedly addresses because Lin is directed to addressing concerns related to large-height inflatable beds, including protrusion of the side walls, stability, aesthetics, and material costs. (*Id.*, ¶¶[0006], [0013].) Lin therefore is analogous art to the '633 Patent.

C. The Catalog

93. It is my understanding that the Catalog was published in 2013. (*See, e.g.*, Ex. 1008, 90.) I understand that the Catalog is thus prior art to the '633 Patent. As explained below, the Catalog discloses contemporary, advantageous tensioning structures for use in air mattresses, including large-height air mattresses.

94. The Catalog generally describes Intex's "Comfort Rest™" line of inflatable products available for purchase, including inflatable beds. (*See, e.g.*, Ex. 1008, 3.) The Catalog also describes inner components of these inflatable beds, including its "Dura-Beam™ Technology." (*Id.*, 6, 16-17.) The Catalog discloses that its Dura-Beam™ construction is "comprised of thousands of high-strength polyester fibers" which "do not stretch over time, resulting in amazing durability for years of lasting comfort." (*Id.*, 6.) The Catalog further discloses that its "Dura-Beam™ interior construction provides the ideal firmness for superb support and rejuvenating sleep." (*Id.*)

95. Among the inflatable beds disclosed by the Catalog is the "Comfort-Plush High Rise Airbed." (*Id.*, 16.) As shown in the annotated graphics below, the Catalog discloses that this airbed comprises multiple inner tensioning structures, including tensioning structures: (a) coupled between the top and bottom sheets of the bed (yellow); (b) coupled between the top sheet and side walls (red); and (c) coupled between the bottom sheet and side walls (orange):

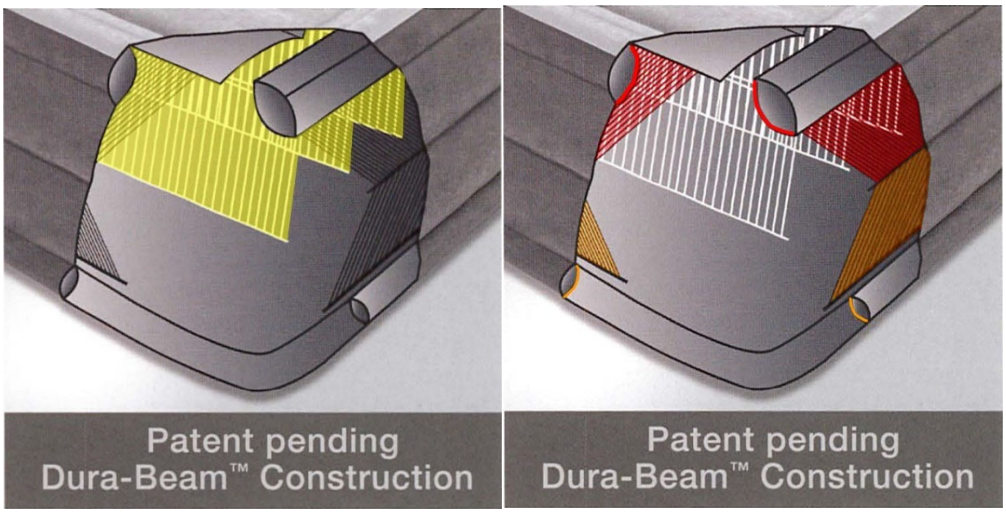

(*Id.*)

96. The Catalog is in the same field as the ’633 Patent because the Catalog relates to inflatable beds and the components of such beds. (*Id.*, 6, 16-17.) The Catalog is pertinent to the problems the ’633 Patent purportedly addresses because the Catalog describes tensioning structures that address the needs for durability, comfort, and support in large-height inflatable beds. (*Id.*) The Catalog therefore is analogous art to the ’633 Patent.

D. Lin ’773

97. Lin ’773 issued on October 22, 2013. (Ex. 1009, Title Page, (45).) I understand that Lin ’773 is thus prior art to the ’633 Patent.

98. Lin ’773 is directed to an improved internal tensioning structure for use in inflatable products such as inflatable beds. (*Id.*, Abstract, 1:20-2:20.) Lin ’773 recognizes that internal tensioning structures disposed in the chamber of an inflatable bed to “give shape to the bed as internal pressure increases, thereby

preventing the inflatable bed from expanding evenly on all sides in the manner of a balloon," were well-known in the art. (*Id.*, 1:38-52; *see also* 1:28-37.) However, Lin '773 notes drawbacks to such prior art structures. (*Id.*, 1:53-2:4.) For example, Lin '773 notes that conventional inflatable beds use tensioning structures "made of PVC sheets with a sufficient thickness to ensure spreading of force and concomitant reductions in stress in the product material," which "contribute[s] to increased weight of the inflatable product" and "increases the compressed/folded volume of the deflated inflatable structure." (*Id.,* 1:53-2:4.)

99. To address these problems, Lin '773 discloses a tensioning structure that is "lightweight and occup[ies] minimal volume when the device is deflated and packed away, while also functioning as a strong and durable internal support upon inflation and use of the inflatable device." (*Id.,* 6:50-56.)

100. In particular, Lin '773 discloses a tensioning structure that "utilizes thin and flexible string- or wire-like strands which join two areas of fabric to one another." (*Id.,* 6:57-59.) The strands "are firmly connected to the adjacent fabric via an intermediate material, such as a strip or sheet, and the intermediate material is in turn firmly connected to the fabric." (*Id.*, 6:59-62.) Thus, in one exemplary embodiment, Lin '773 discloses tensioning structures comprising a "plurality of substantially parallel strands 32" (yellow) that are captured between two weld strips 31 (red) at the top and bottom of the strands:

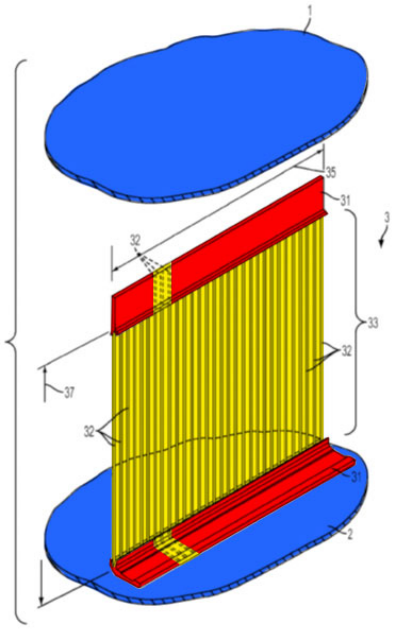

FIG. 1

(Ex. 1009, 7:17-22, 12:22-31, Fig. 1.) The weld strips, in turn, are welded to an "upper material 1" and "lower material 2," such as the top and bottom sheets (blue) of an inflatable bed, as shown above and further in annotated Figure 3 below:

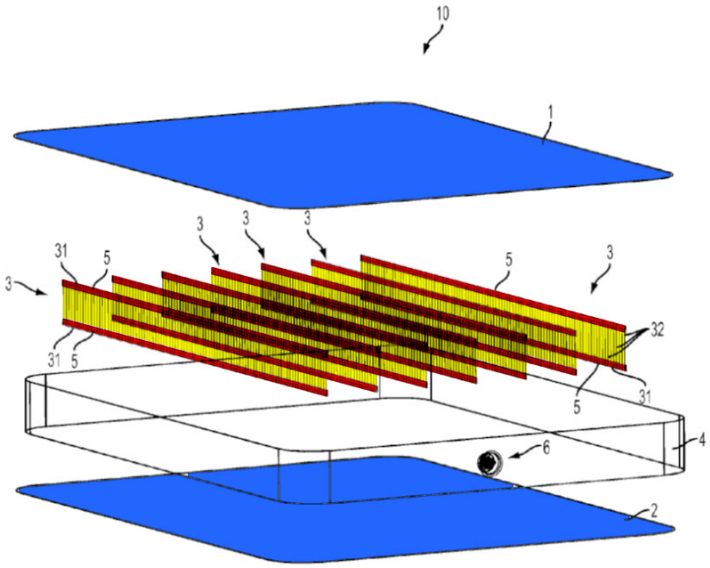

FIG. 3

(*Id.*, 7:22-25, 7:53-66, Fig. 3.)

101. Lin ’773 teaches that using these tensioning structures in an inflatable bed “achieves high tensile strength while promoting light weight and low packed volume of the finished inflatable product.” (*Id.*, 9:52-55; *see also id.*, 6:52-56 (“The tensioning structures are lightweight and occupy minimal volume when the device is deflated and packed away, while also functioning as a strong and durable internal support upon inflation and use of the inflatable device.”); 10:19-20 (“Because of use of strands 32 rather than PVC sheets, the overall weight of mattress 10 can also be reduced.”); 16:17-31 (“In this way, the tensioning structure performs well an internal structure of the inflatable product, while facilitating an overall reduction in weight and deflated/folded volume of the inflatable product.”).) In addition, the Lin ’773 teaches that the use of these tensioning structures reduces costs as compared to prior art tensioning structures. (*Id.*, 1:20-22 (noting that the disclosed tensioning structures are “light weight and low in cost”); 8:67-9:1 (“These regular threads provide substantial tensile strength at a very low cost.”); 18:25-27 (“A tensioning structure in accordance with the present disclosure is also a low-cost option for imparting a desired structure and shape to an inflatable device.”).)

102. Lin ’773 is in the same field as the ’633 Patent because Lin ’773 relates to inflatable beds and internal tensioning structures used in such beds. (*Id.*, Abstract, 1:20-22, 2:8-20, 6:50-56.) Lin ’773 is pertinent to the problems the ’633

Patent purportedly addresses because Lin ’773 is directed to preventing the outward expansion of the outside surfaces of an inflatable bed as the bed is inflated. (*Id.*, 1:38-52, 7:16-25, 8:47-55.) Lin ’773 therefore is analogous art to the ’633 Patent.

E. Liu

103. Liu published on November 26, 2015. (Ex. 1015, Title Page, (43).) I understand that Liu is thus prior art to the ’633 Patent.

104. Liu is directed to tensioning structures utilized in inflatable products such as air beds. (Ex. 1015, ¶¶[0003], [0006], [0010].) Liu recognizes that it was known in the art to dispose tensioning structures such as coil-beams or I-beams “at various locations within the inflatable cavity to shape the bed as the inflatable cavity is pressurized.” (*Id.*, ¶[0006]; *see also id.*, ¶[0040].) However, Liu notes that such structures “are typically made of plastic or PVC sheets with a sufficient thickness to ensure that external loads are spread and concomitant tensile stresses are reduced in the product material,” which “contributes to increased weight of the inflatable product” and “increases the compressed/folded volume of the deflated inflatable structure.” (*Id.*, ¶[0008].) In addition, Liu notes that such solid-PVC beam structures “generally are not strong enough to withstand high pressure loads generated during inflation.” (*Id.*, ¶[0009].)

105. To address these problems, Liu discloses tensioning structures that "join two areas of fabric to one another," such as the top and bottom sheets of an air mattress. (¶¶[0035], [0037].) Liu discloses that its tensioning structure may include a panel "made of material having an open cell mesh construction." (*Id.*, ¶[0012]; *see also id.*, ¶[0035].) As one example, as shown in annotated Figures 1 and 2 below, Liu discloses a tensioning structure that "utilizes thin, flexible I-beam structures," that "comprise open cell or mesh material" (yellow) and "are firmly connected at their ends to adjacent fabric by an intermediate material, such as a strip of plastic" (red):

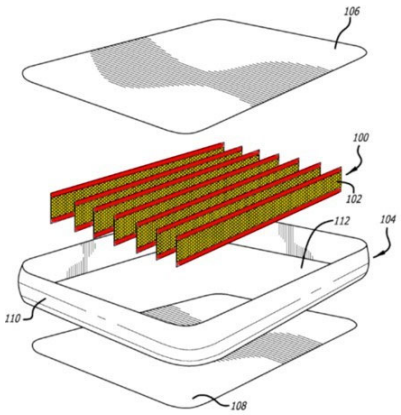

FIG. 1

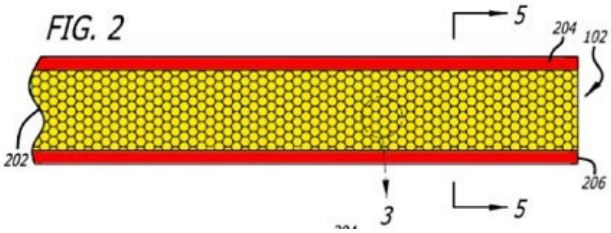

(Id., ¶¶[0035], [0040], Figs. 1, 2.)

106. Liu discloses that the strips of plastic, or "weld strips," "may comprise "relatively thin strips of plastic, PVC, or other durable material." (*Id.*, ¶[0050].) Liu discloses various ways the weld strips may be affixed to the mesh panel, including "sandwich[ing]" the panel between two weld strips by "radio-frequency

(RF) welding, hot-air coupling (e.g., melting or welding), adhering (e.g., gluing) or other means known in the art," or folding a single weld strip about the lateral ends of the panel. (*Id.*, ¶¶[0051]-[0052].) Liu further discloses various ways the weld strips may be coupled between the top sheet and bottom sheet, including "sewing, stitching, RF welding, hot-air coupling, adhering, or other means known in the art." (*Id.*, ¶[0054].)

107. Liu discloses that use of such tensioning structures between opposing sheets of an air mattress effectively "prevent[s] over-expansion or 'ballooning' of the mattress" and thereby ensures that the air mattress does not become deformed, while at the same time providing weight and cost savings over known solid tensioning structures. (*Id.*, ¶¶ [0040]-[0041], [0009]-[0010], [0054], [0061].) Liu further indicates that its tensioning structures may be used in "mattresses having multiple layers (e.g., double layers)." (*Id.*, ¶[0039].)

108. In addition, Liu discloses that the tensioning structures are not limited to connecting top sheets and bottom sheets of air mattresses, but "may be used in any application where a lightweight, packable structure is needed to join two pieces of material that are urged away from one another in use." (*Id.*, ¶[0063], *see also id.*, ¶[0035].)

109. Liu is in the same field as the '633 Patent because Liu relates to inflatable mattresses and the components of such mattresses. (*Id.*, ¶¶[0003],

[0037]-[0040].) Liu is pertinent to the problems the ’633 Patent purportedly addresses because Liu is directed to preventing the outward expansion of air mattresses during use, including multiple-layer air mattresses. (*Id.*, ¶¶[0009]-[0010], [0039]-[0041], [0063].) Liu therefore is analogous art to the ’633 Patent.

F. Liu ’866

110. Liu ’866 issued on September 18, 2007. (Ex. 1011, Title Page, (45).) I understand that Liu ’866 is thus prior art to the ’633 Patent.

111. Liu ’866 is directed to “an air bed with a stable supporting structure.” (Ex. 1011, 1:7-8.) Liu ’866 recognizes that raised-height airbeds (e.g., like that shown in Figure 4 of Liu ’866, with the bottom chamber acting like a traditional box spring and the upper chamber like a traditional mattress) were known in the art. (*Id.*, 1:20-43; Figs. 4-7.) Liu ’866 further recognizes that these raised-height airbeds had known stability issues, which could lead to users falling off the bed. (*Id.*, 1:13-19.) While Liu ’866 notes attempts in the prior art to address these issues with external stability structures, Liu ’866 identifies several drawbacks to these beds, including (1) the potential for a user to tread onto the stability structure and fall; (2) decreased production efficiency and increased production costs due to their complicated structure; and (3) an undesirable appearance. (*Id.*, 1:13-55; Figs. 4-7).

112. To address these problems, Liu ’866 discloses the use of “oblique extending strips” welded to the bottom sheet and side walls of a multiple-layer air mattress, in addition to traditional tensioning structures coupled to the top and bottom sheets. (*Id.*, 3:14-18.)

113. In particular, as shown in annotated Figure 3 below, Lui ’866 discloses an air bed that includes: (i) a periphery sheet 1 (green); (ii) a top sheet 2 (blue); (iii) a bottom sheet 3 (blue); and (iv) a middle sheet 4 (light blue):

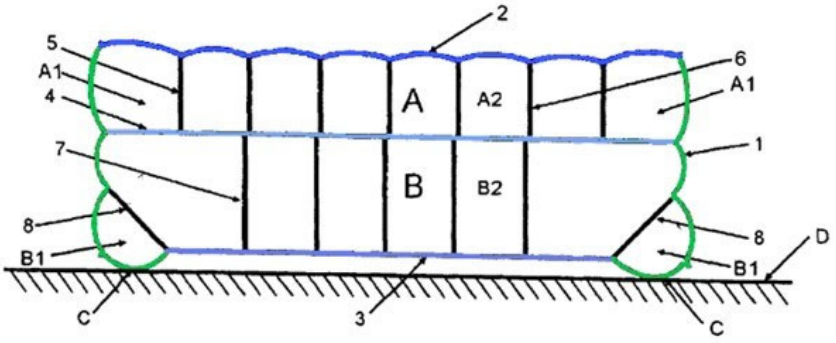

Fig.3

(*Id*., 1:62-64, 2:56-58, Figs. 1-3.)

114. As further shown in annotated versions of Figure 2 below, Liu ’866’s airbed further includes (i) a first set of extending strips 6 (yellow); (ii) a loop of an outer extending strip 5 (red); (iii) a second set of extending strips 7 (yellow); and (iv) an oblique extending strip 8 (orange):

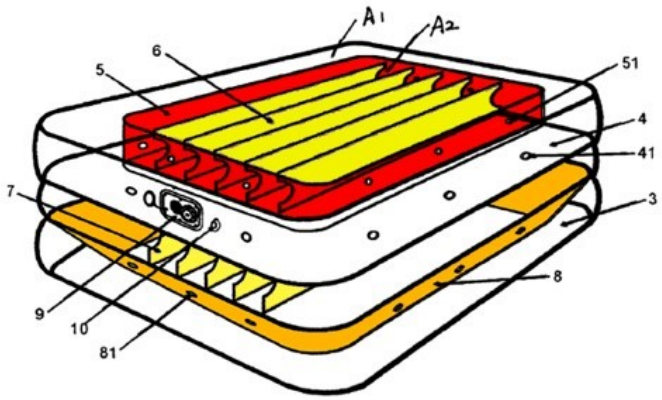

Fig.2

(*Id*. at 1:65-2:11, 2:66-3:18, Fig. 2.)

115. The outer extending strip 5 and first set of extending strips 6 are "fuse welded to top sheet 2 and middle sheet 4." (*Id.*, 3:2-7.) The second set of extending strips 7 is "welded to the middle sheet 4 and the bottom sheet 3." (*Id.*, 3:12-14.) The oblique extending strip 8 is "provided around [the] second set of extending strips" 7 and "one side edge of [the] oblique extending strip 8 is welded to the periphery sheet 1, and the other side edge is welded to [the] bottom sheet 3." (*Id*., 3:15-18.)

116. As shown in annotated Figure 8 below, Liu '866 also discloses an alternative embodiment in which "a plurality of oblique extending strips 8 [orange], for example, four oblique extending strips, two ends of which are not connected with each other, are provided around the periphery of the second set of extending strips 7 [yellow] in the lower air-chamber B":

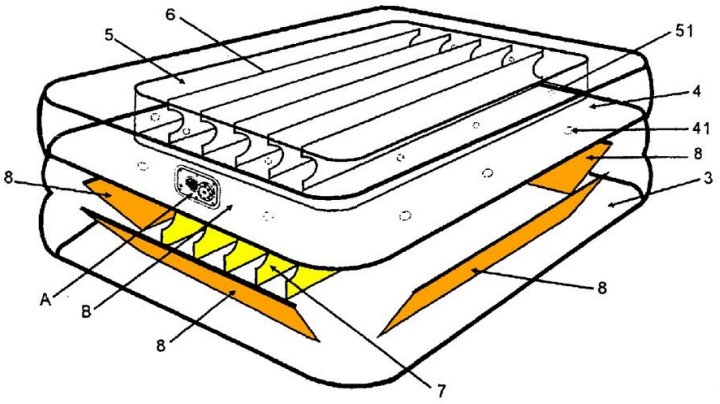

Fig.8

(*Id*., 3:45-4:5; Fig. 8.) These oblique extending strips 8 (orange) are "welded to periphery sheet 1 around the air bed and bottom sheet 3, respectively." (*Id.*)

117. Liu '866 discloses that use of the oblique extending strip in the lower air-chamber creates a peripheral auxiliary air-chamber that extends beyond the surface of the bottom sheet, thereby enhancing stability of the air bed and preventing potential injury, while providing "a simple structure, lower production costs, and a very beautiful appearance." (*Id.*, 2:18-31.)

118. Liu '866 is in the same field as the '633 Patent because Liu '866 relates to inflatable mattresses and the components of such mattresses. (*Id.*, 1:6-8, 1:59-2:31.) Liu '866 is pertinent to the problems the '633 Patent purportedly addresses because Liu '866 is directed to addressing drawbacks with respect to stability, roll over, and aesthetics in larger-height air mattresses. (*Id.*, 1:44-55, 2:18-31, 3:29-38.) Liu '866 therefore is analogous art to the '633 Patent.

G. Metzger

119. Metzger issued on August 15, 2006. (Ex. 1010, Title Page, (45).) I understand that Metzger is thus prior art to the ’633 Patent.

120. Like the ’633 Patent, Aoki, and Lin, Metzger is directed to “air mattresses or beds,” and in particular air mattresses of “greater height or thickness.” (Ex. 1010, 1:5-8, 1:45-2:67.) Also like the ’633 Patent and Aoki, Metzger recognizes a number of problems with existing “double height” air mattresses, including “the expansion or deflection of the mattress faces during use,” and in particular “the expansion of the mattress sidewall extended between the top face and the bottom face of the mattress.” (*Id.*, 1:60-2:17.)

121. To address these problems, Metzger discloses “a ‘two-high’ or ‘double-height’ single air chamber mattress” employing a series of tensioning structures. (*Id.*, 4:52-5:59.) First, as shown in annotated Figures 6 and 7 below, Metzger’s air mattress includes “a series of spaced coils 18” (yellow) for “the purpose of tying the first or top exterior surface panel and the second or bottom exterior surface panel directly to one another so that as a load is placed on either panel surface, the mattress panels will remain in a somewhat fixed position with respect to one another”:

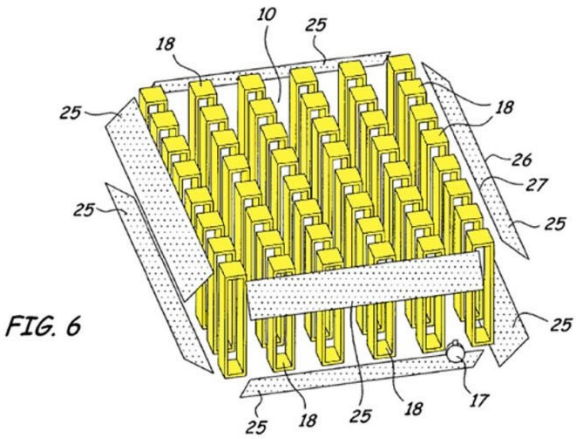

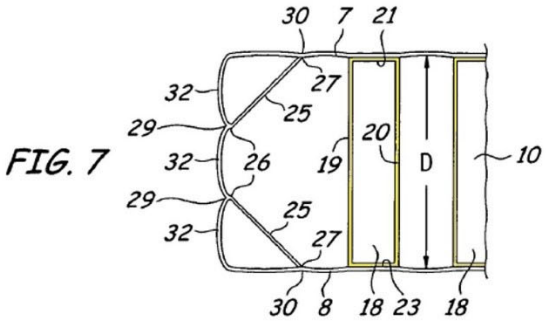

(*Id*., 4:44-50, Figs. 6-7.)

122. Second, as shown in annotated Figures 5-7, below, Metzger's mattress also includes "at least one side support beam 25" (red and orange) that "extend[s] in the lengthwise direction of at least one of the mattress side panels, or along each one of the side panels of the air mattress":

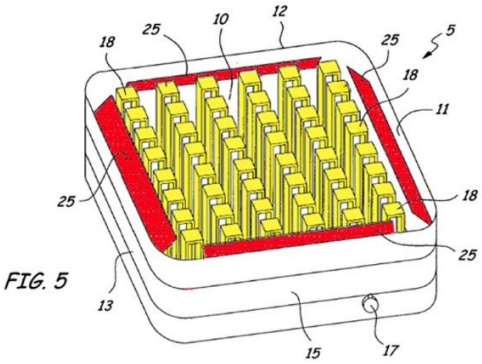

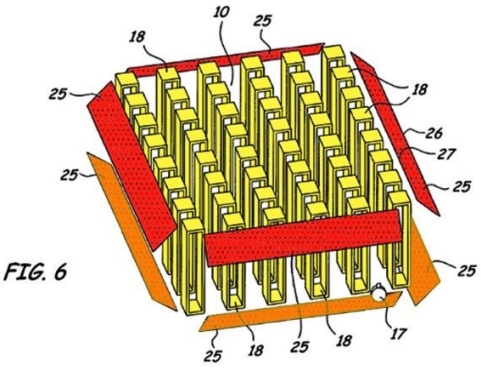

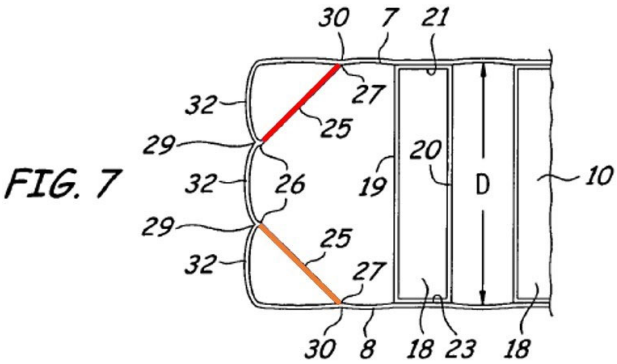

(*Id*., 5:27-30, Figs. 5-7.) Each side support beam "has a first edge 26 adapted to be affixed to a side panel of the mattress along a weld or connection line 29, and a spaced second edge adapted to be affixed to either of the first panel 7 or the second panel 8 along a second weld or connection line 30." (*Id.,* 5:31-35.) The side support beams "act to limit the outward expansion of the side panel(s) of the air mattress to which the side support beams are affixed or otherwise attached in response to the presence of a load placed externally on either one of the first panel or the second panel of the mattress." (*Id*., 5:54-59.)

123. Metzger further discloses different options for coupling the side support beams to the side wall so that the inflatable bed may comprise two or more "layers." In particular, Metzger discloses that the respective edges of the two side support beams "may be spaced from one another on the side wall of the mattress as shown in FIG. 7, or may be co-linear and extend along a common edge connection (not illustrated) on the side wall." (*Id*., 5:60-64.) Metzger discloses that when oriented as shown in Figure 7 above, the side support beams edges "act to define three separate side panel segments 32 of approximate equal width extending across the at least one side panel of the mattress." (*Id*., 5:64-6:5.) Metzger further discloses that when instead oriented such that the respective edges of the side support beams are co-linear with or overlie on another, "they will define two separate side panel segments" extending across the side panel. (*Id*., 6:5-10.)

Metzger further discloses that "[t]he respective first edges of the side support beams may be positioned and spaced from one another as desired along the side panel(s) of the mattress for forming separate side panel segments of any desired width thereacross." (*Id*., 6:10-14.)

124. Metzger is in the same field as the '633 Patent because Metzger relates to inflatable mattresses and the components of such mattresses. (*Id.*, 1:5-8, 2:55-3:13.) Metzger is pertinent to the problems the '633 Patent purportedly addresses because Metzger is directed to preventing the outward expansion of large-height air mattresses during use, particularly the side walls of such mattresses. (*Id.*, 1:45-2:51, 5:12-59.) Metzger therefore is analogous art to the '633 Patent.

H. Chung

125. Chung issued on March 25, 2008. (Ex. 1012, Title Page, (45).) I understand that Chung is thus prior art to the '633 Patent.

126. Chung is directed to "a modified air mattress, which has a built-in electric air pump eliminating the need for an external pump." (*Id.*, 1:24-26.) Chung recognizes that air mattresses and electric air pumps for inflating the internal chambers of the air mattress were known in the art. (*Id.*, 1:15-23, Fig. 11.) Chung notes that such pumps were "separately provided, requiring users to carry two items, the air mattress itself, and an electric air pump," which resulted in

inconvenience to the user. (*Id.*, 1:19-23.) Chung purports to solve this problem by providing various options for electric pumps that are built into the air mattress, as shown below for example in annotated Figure 4A:

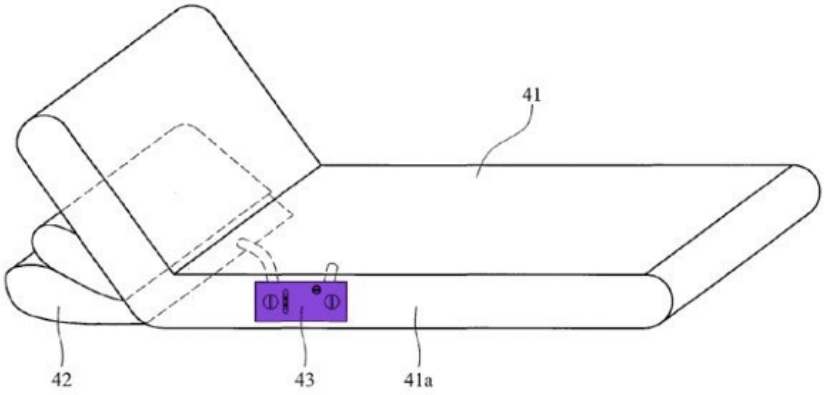

FIG. 4A

(*Id.*, 1:33-2:3, 5:1-6, Fig. 4A.)

127. Chung is in the same field as the ’633 Patent because Chung relates to inflatable mattresses and the components of such mattresses. (*Id.*, 1:13-14, 1:24-27, 1:31-2:3.) Chung is pertinent to the problems the ’633 Patent purportedly addresses because Chung is directed to reducing inconvenience to users of air mattresses through the use of a built-in air pump. (*Id.*, 1:24-32; *see also* Ex. 1001, 2:1-3, 4:44-48.) Chung therefore is analogous art to the ’633 Patent.

X. THE PRIOR ART DISCLOSES OR SUGGESTS ALL OF THE FEATURES OF THE CLAIMS OF THE '633 PATENT

A. Aoki Discloses or Renders Obvious Claims 1-11 and 17 of the '633 Patent

128. In my opinion, Aoki discloses all of the features of claims 1-11 and 17 of the '633 Patent.

1. Claim 1

a. An inflatable bed, comprising:

129. I understand that "[a]n inflatable bed, comprising" is the preamble of claim 1. I have been asked to assume that the preamble is limiting. In my opinion, Aoki discloses this feature. (Ex. 1005, Title Page, 1-4, Fig. 1.) For example, Aoki discloses a "box-shaped air mattress (5)," into which "air is inserted" so that it is "full of air." (*Id.*, 1, 4.) A POSA would understand this to constitute an inflatable bed.

b. a top sheet and a bottom sheet disposed vertically at an interval;

Aoki discloses this limitation. (*Id.*, 2, 3, Figs. 1, 2.) Aoki discloses that the box-shaped air mattress is comprised of an "upper sheet (1)" and "bottom sheet (2)." (*Id.*, 2, 3.) As shown in annotated Figures 1 and 2 below, the upper sheet and bottom sheets (blue) are disposed vertically at an interval:

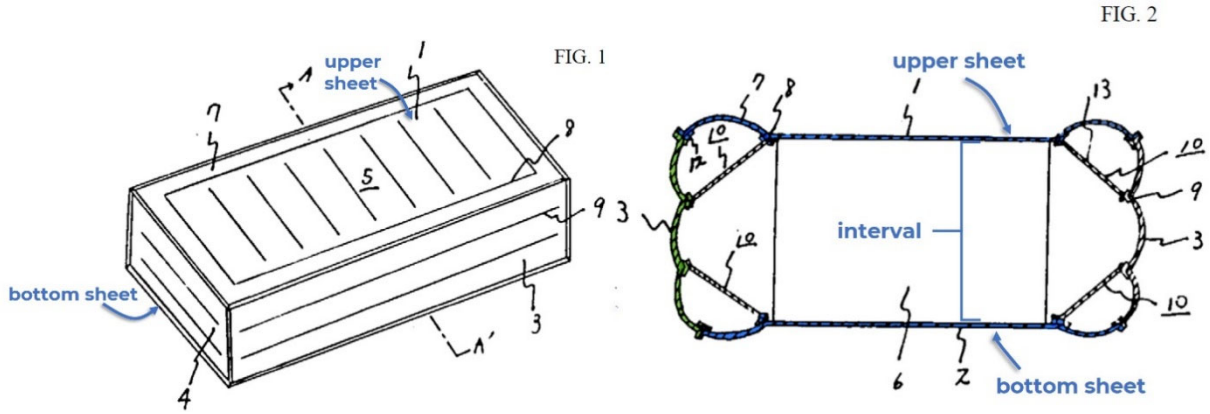

(*Id.*, Figs. 1, 2.)

> ***c. at least one side wall, an upper edge of said side wall being coupled to an outer edge of said top sheet, a lower edge of said side wall being coupled to an outer edge of said bottom sheet, an air chamber formed between said top sheet, said bottom sheet and said side wall; and***

Aoki discloses this limitation. (*Id.*, 3, 5, Figs. 1, 2.) Aoki discloses that the box-shaped air mattress is comprised of two "lengthwise sheets (3)" and two "widthwise sheets (4)," which constitute side walls of the air mattress. (*Id.*, 3.) Aoki further discloses that the upper sheet (1), bottom sheet (2), lengthwise sheets (3), and widthwise sheets (4) are joined together "at an approximate 90-degree angle" to form the air mattress, and that air pressure is maintained inside the air mattress. (*Id.*, 3, 5.) As shown in annotated Figures 1 and 2 below, upper edges of the lengthwise and widthwise sheets (green) are thus coupled to outer edges of the upper sheet (blue), lower edges of the lengthwise and widthwise sheets are coupled to outer edges of the bottom sheet (blue), and an air chamber is formed between the upper sheet, bottom sheet, lengthwise sheets, and widthwise sheets:

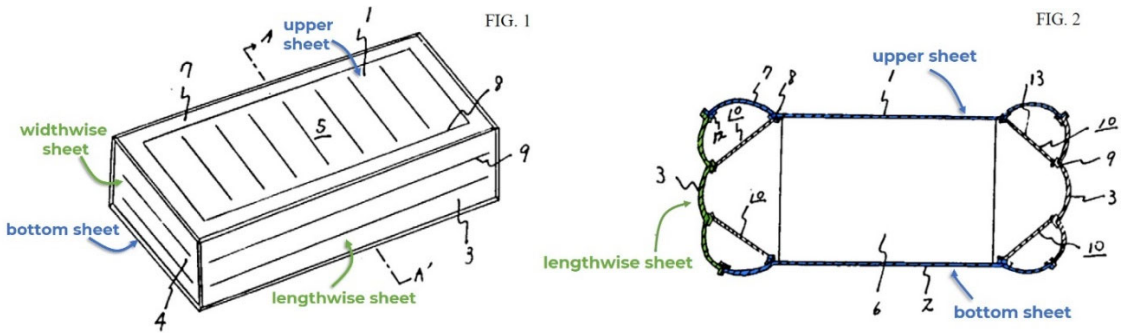

(*Id.*, Figs. 1, 2.)

d. at least one first tensioning structure disposed in said air chamber, an upper end and a lower end of said first tensioning structure being respectively coupled to said top sheet and said bottom sheet; and

130. Aoki discloses this limitation. (Ex. 1005, 1-2, 4-5, Figs. 1, 2.) As shown in annotated Figures 1 and 2 below, Aoki discloses "vertical hanging sheet[s] (6)" (yellow) that are "adhered" or sewn to the upper and bottom sheets with "sufficient adhesive power," thus forming depression lines in the upper and bottom sheets and (1) preventing the upper and bottom sheets from "swell[ing] and form[ing] an arch"; (2) "allaying concerns about [a user] falling off" the mattress; and (3) improving design aesthetics by "placing an accent on the surface of the box-shaped air mattress":

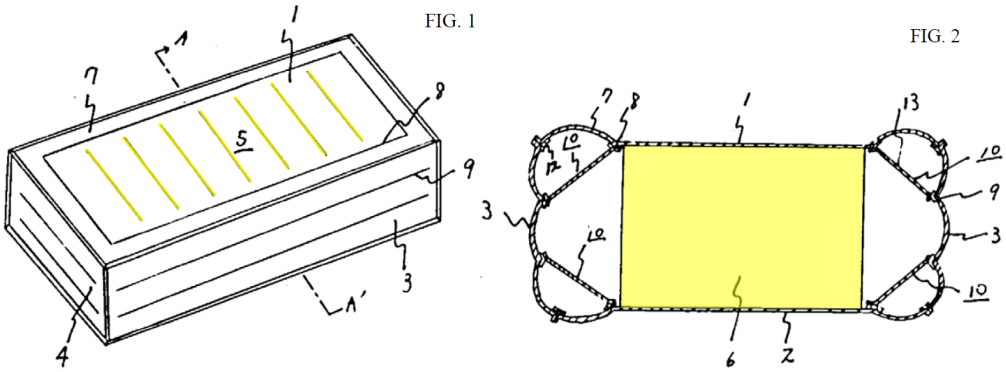

(*Id.*, 3-5, Figs. 1, 2.)

> ***e. at least one support structure disposed in said air chamber, said support structure being disposed in a longitudinal direction of at least one of said side walls, at least two outside edges of said support structure being respectively coupled to the side wall adjacent, at least one inside edge of said support structure being coupled to the top sheet or bottom sheet adjacent;***

131. Aoki discloses this limitation. (Ex. 1005, 2-5, Figs. 2-4.) Aoki discloses a number of "diagonal bracing hanging sheet[s] (10)," which are individually adhered between (a) the upper sheet and one of the lengthwise sheets; (b) the upper sheet and the opposite lengthwise sheet; (c) the upper sheet and one of the widthwise sheets; (d) the upper sheet and the opposite widthwise sheet; (e) the bottom sheet and one of the lengthwise sheets; (f) the bottom sheet and the opposite lengthwise sheet; (g) the bottom sheet and one of the widthwise sheets; and (h) the bottom sheet and the opposite widthwise sheet. (*Id.*, 2, 4.) This is partially reflected in annotated Figure 2 below, which is a cross-section of the air mattress showing four diagonal bracing hanging sheets disposed in a longitudinal direction of the lengthwise sheets (side walls): two (in red) adhered between the upper sheet and lengthwise sheets, and two (in orange) adhered between the bottom sheet and lengthwise sheets:

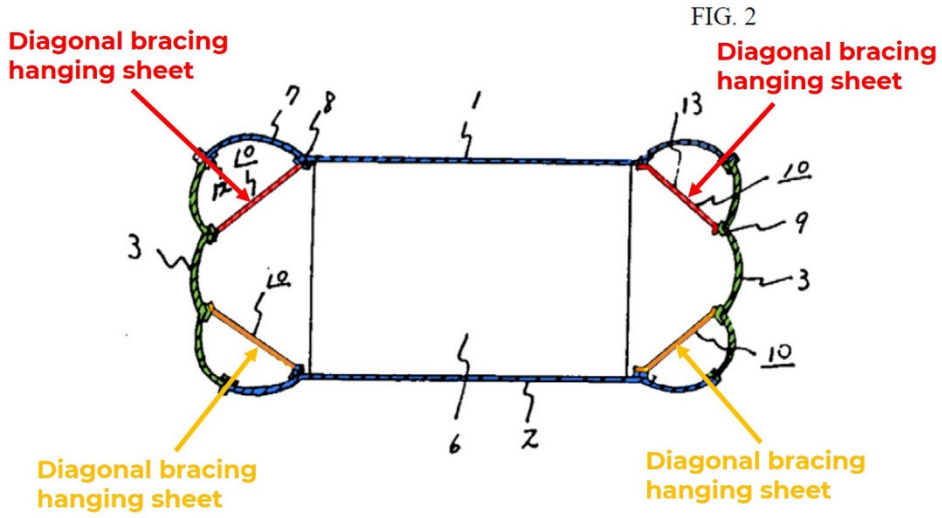

(*Id.*, Fig. 2.)

132. Aoki discloses that the diagonal bracing hanging sheets (10) have "adhesive positions (8) and (9)," and the upper sheet, bottom sheet, and lengthwise and widthwise sheets have "adhesive sites" or "adhesion sites" (11) and (11'). (*Id.*, 2, 3.) Aoki further discloses that the diagonal bracing hanging sheets (10) are comprised of "intermediate materials" (the main portion of the diagonal bracing hanging sheets, in between the adhesive positions (8) and (9)) which are adhered or sewn to the adhesive sites (11) and (11') of the upper, bottom, lengthwise, and widthwise sheets, respectively. (*Id.*, 3-4, Fig. 3.) In this way, the intermediate materials and the adhesion sites "will be integrated," and thus the diagonal bracing hanging sheet "will have sufficient adhesive power … so that the respective surface sheets and hanging sheets will not peel off." (*Id.*, 4.)

133. Aoki therefore discloses that the outside edges (adhesive positions) of the diagonal bracing hanging sheets are coupled to the upper sheet, bottom sheet, and lengthwise and widthwise sheets at the adhesive sites of the upper sheet, bottom sheet, and lengthwise and widthwise sheets. Aoki discloses that the adhesive sites comprise a portion of the upper sheet, bottom sheet, and lengthwise and widthwise sheets; however, even if the adhesive sites were somehow to be considered separate materials, Aoki still discloses that the diagonal bracing hanging sheets are coupled to the upper sheet, bottom sheet, and lengthwise and widthwise sheets via these adhesive sites, as the '633 Patent does not restrict the scope of "coupled" to exclude adhesion materials (e.g., glue). Indeed, the '633 Patent discloses that the "coupling" of the edges of the support structure to the top sheet and side wall and the bottom sheet and side wall, respectively, is intended "to limit the [upward / downward] and lateral bulging of the [top sheet 11 / bottom sheet 12] and the side wall 13 after [the] air chamber is inflated." (Ex. 1001, 6:40-63.) Thus, Aoki discloses that the diagonal hanging bracing sheets are coupled to the upper sheet, bottom sheet, and lengthwise and widthwise sheets, as the diagonal hanging bracing sheets will tense as the inflatable bed is inflated, thus limiting bulging of the top sheet, bottom sheet, and side walls by preventing those surfaces from urging away from each other. (Ex. 1005, 3-5.)

134. As shown in annotated Figure 1 below, Aoki further discloses that the diagonal bracing hanging sheets (10) form depression lines at their adhesive positions (8) and (9) when coupled to the top, bottom, lengthwise, and widthwise sheets:

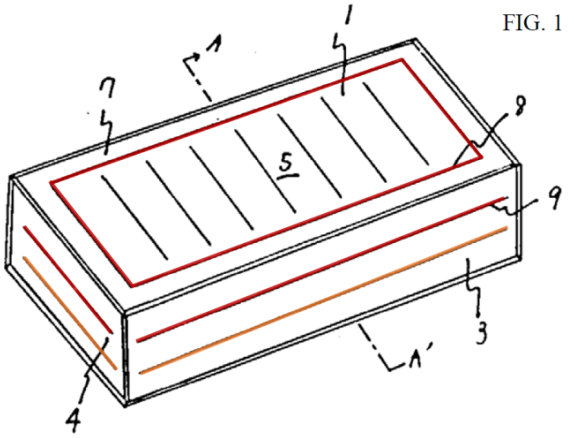

(*Id.*, 2, 5, Fig. 1.)

135. As reflected in annotated Figure 4 below, Aoki further discloses that "just one diagonal bracing hanging sheet (10) for each corner is insufficient, and it is desirable for two or more diagonal bracing hanging sheets (10) to be placed there":

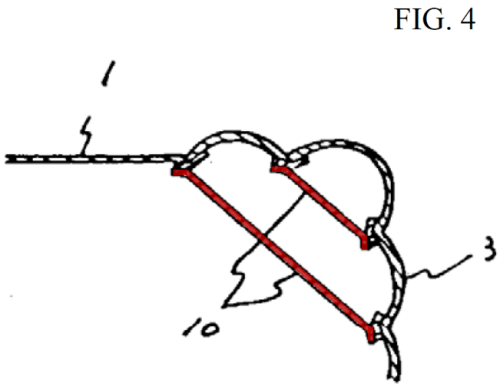

(*Id.*, 4, Fig. 4.)

136. Although Figure 4 only shows one example corner of the air mattress, Aoki discloses that this would be applied to "**each corner**" to maintain an angle that is approximately 90-degrees. (*Id.*, 4-5 (emphasis added).) This results in a structure illustrated by the annotated Figure below, which generally reflects the disclosure of Figure 4 for each corner as shown in Figure 2:

FIG. 2

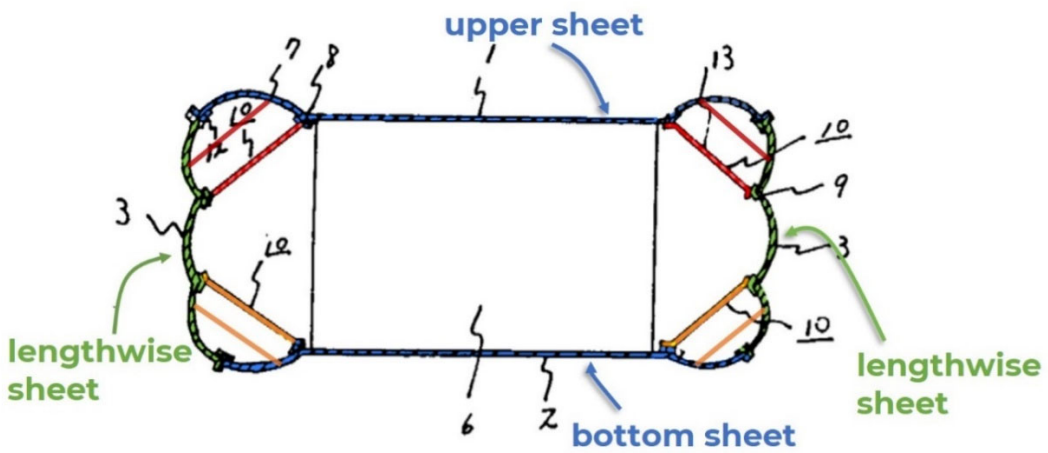

137. Aoki discloses that use of the diagonal bracing hanging sheets thus addresses known problems regarding larger air mattresses, including bulging of the side walls, lack of stability, and aesthetics, because "[b]y using the diagonal bracing hanging sheet, no matter how large the box-shaped air mattress, the upper sheet, the lower sheet and the side sheets shall be maintained at an appropriate 90-degree angle so it is possible to construct a large box-shaped air mattress." (*Id.*, 1-2, 4-5.) As with the vertical hanging sheets (6) discussed above, the diagonal bracing hanging sheets serve to (a) prevent the top, bottom, and side sheet surfaces from "swell[ing] and form[ing] an arch"; (b) "allay[] concerns about falling off

while lying on it"; and (c) improve design aesthetics by "placing an accent on the surface of the box-shaped air mattress." (*Id.*, 4-5.)

138. As explained above, Aoki expressly discloses that two or more diagonal bracing hanging sheets would be applied to "each corner" of the mattress as shown in Figure 4. However, to the extent Figure 4 is considered to be a separate embodiment of Aoki, it would have been obvious to a POSA to apply Figure 4's teaching of multiple diagonal bracing hanging sheets to each corner of the inflatable bed disclosed in Figures 1 and 2. A POSA would have known that in order to achieve the benefits of Aoki as described above—including maintaining each side of the inflatable bed at an approximate 90-degre angle, preventing swelling of the outer surfaces, preventing a user from falling off, and improving design aesthetics—it would be advantageous to apply multiple diagonal bracing hanging sheets to not only one corner, but to all corners of the inflatable bed. Indeed, a POSA would have known that applying multiple diagonal bracing hanging sheets to just one corner would result in the inflatable bed being asymmetric and/or lopsided, which would defeat Aoki's objectives as described above. Thus, a POSA would have been motivated to combine Figure 4's teaching of two or more diagonal bracing hanging sheets to the inflatable bed disclosed in Figures 1 and 2 of Aoki.

139. As shown in annotated Figures 2 and 4 below, the diagonal bracing hanging sheets thus constitute a support structure disposed in a longitudinal direction of the side walls, with at least two outside edges of the support structure being coupled to the side wall (lengthwise sheet) adjacent, and at least one inside edge of the support structure being coupled to the upper sheet or bottom sheet adjacent:

FIG. 2

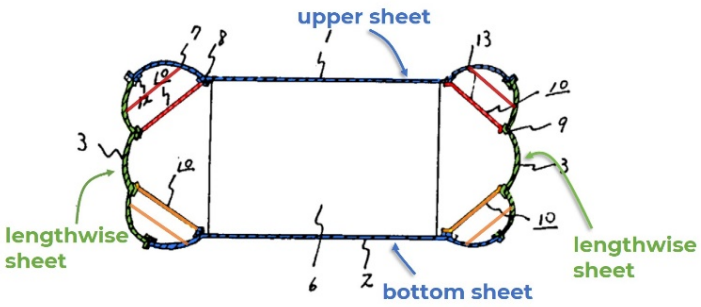

FIG. 4

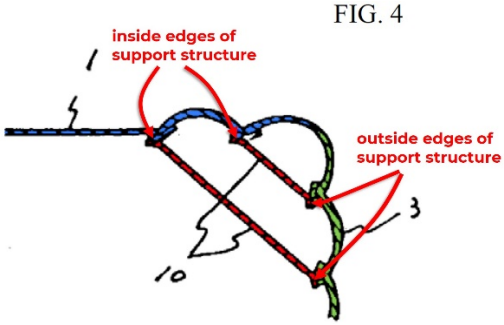

(*Id.*, Figs. 2, 4.)

f. wherein said support structure comprises a second tensioning structure and a third tensioning structure, at least two outside edges of said second tensioning structure are respectively coupled to said at least one side wall, at least one inside edge of said second tensioning structure is coupled to said top sheet; and

wherein at least two outside edges of said third tensioning structure are respectively coupled to said at least one side wall, at least one inside edge of said third tensioning structure is coupled to said bottom sheet.

140. Aoki discloses or suggests these limitations. (Ex. 1005, 2, 4, Figs. 2, 4.) As described above, Aoki discloses diagonal bracing hanging sheets (10) individually adhered between the upper sheet and side walls (lengthwise sheets and

widthwise sheets), and between the bottom sheet and side walls (lengthwise sheets and widthwise sheets). (*Id.*, 2, 4; *supra*, ¶¶131-136.) As shown in the annotated Figure below, which again reflects the diagonal bracing hanging sheets as shown in Figures 2 and 4, the diagonal bracing hanging sheets adhered between the upper sheet and side walls comprise a second tensioning structure, and the diagonal bracing hanging sheets adhered between the bottom sheet and side walls comprise a third tensioning structure[3]:

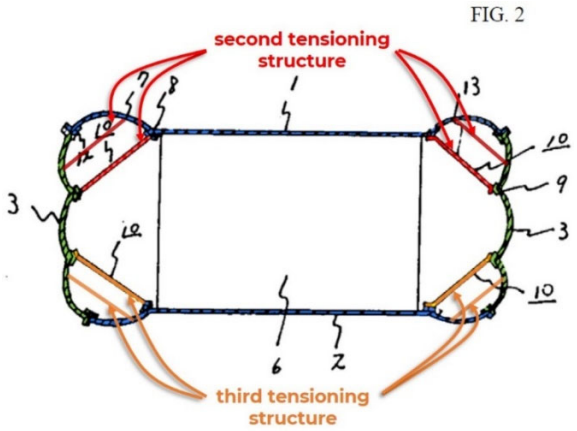

(*See* Ex. 1005, Figs. 2 and 4.)

[3] That the second tensioning structure and third tensioning structure are each comprised of multiple diagonal bracing hanging sheets does not remove them from the scope of the term, as the '633 Patent makes clear that the second tensioning structure and third tensioning structure each may be comprised of two or more separate I-beams, which themselves may be "of a continuous annular structure or a segmental annular structure." (Ex. 1001, 6:64-7:12, 7:41-50, Figs. 7, 8.)

141. With respect to the diagonal bracing hanging sheets adhered between the upper sheet and side walls (second tensioning structure), as shown below in annotated Figure 4, at least two outside edges are respectively coupled to at least one side wall (in this Figure, one of the lengthwise sheets), and at least one inside edge is coupled to the top (upper) sheet:

FIG. 4

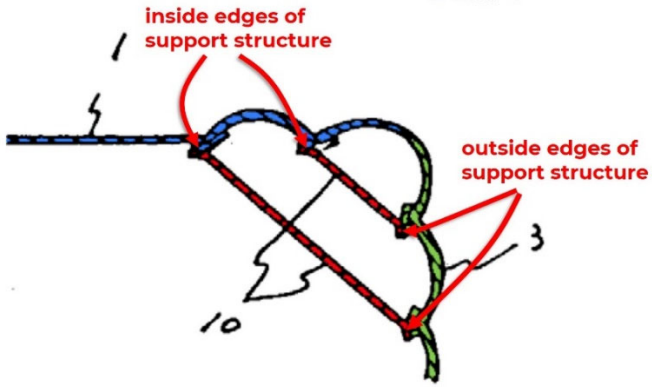

(*Id.*, Fig. 4.)

142. As explained above, Aoki expressly discloses that two or more diagonal bracing hanging sheets are provided in each corner of the inflatable mattress. (Ex. 1005, 4-5.) Thus, the diagonal bracing hanging sheets adhered between the bottom sheet and side walls (third tensioning structure) would look the same as Figure 4, only flipped to show the orientation of the bottom of the mattress instead of the top. This is reflected in the annotated Figure below, which is Figure 4 rotated 180 degrees about the X-axis:

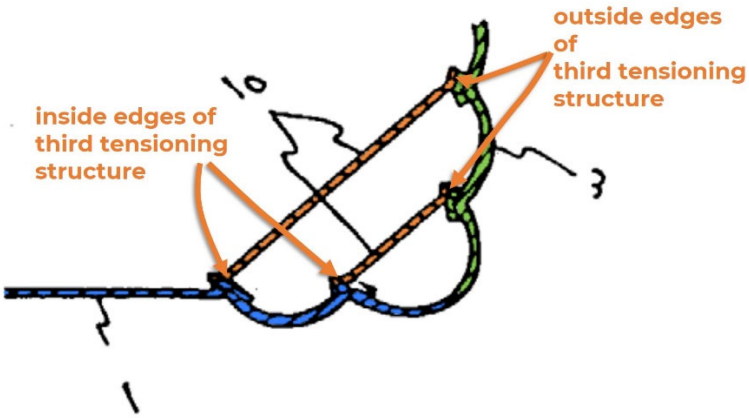

(*Id.*, Fig. 4.) As shown in the above Figure, at least two outside edges of the third tensioning structure are respectively coupled to at least one side wall (in this Figure, one of the lengthwise sheets), and at least one inside edge is coupled to the bottom sheet.

143. Accordingly, in my opinion, Aoki discloses or renders obvious all limitations of claim 1 of the ’633 Patent.

2. Claim 2

a. The inflatable bed according to claim 1,

144. As discussed above, in my opinion Aoki discloses or renders obvious all of the limitations of claim 1. (*Supra* §X.A.1.)

b. wherein said second tensioning structure and said third tensioning structure are respectively provided with a plurality of air holes, through which an airflow passage is formed in said air chamber.

145. Aoki discloses this limitation. (Ex. 1005, 4, Figs. 1, 3.) As shown in annotated Figure 1 below, Aoki discloses that the diagonal bracing hanging sheets form depression lines (red for the hanging sheets comprising the second tensioning

structure; orange for the hanging sheets comprising the third tensioning structure) at their adhesive positions (8) and (9) when coupled to the top, bottom, lengthwise, and widthwise sheets, and that these depression lines do not span the entire length of these sheets, but rather stop short on either end:

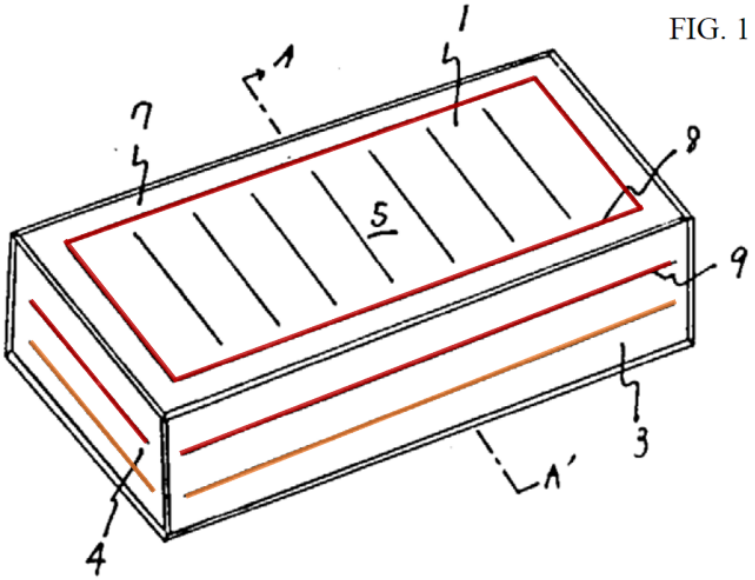

146. Accordingly, each of the second tensioning structure and third tensioning structure will have gaps in each corner, through which air may flow within the air chamber. As discussed above, the '633 Patent identifies such tensioning structures with gaps in each corner (as in Figure 8 below) as providing a plurality of air holes as recited in claim 2:

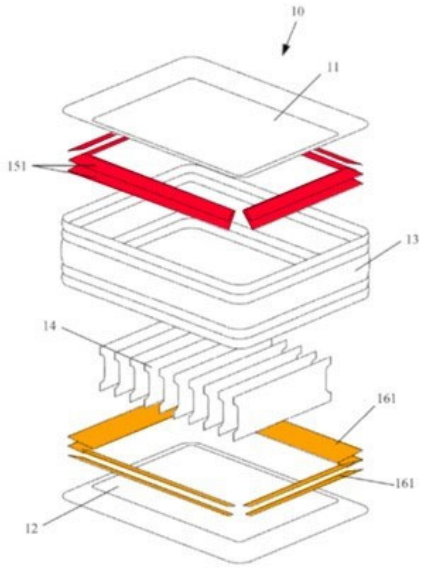

Fig. 8

(*Supra*, ¶¶79-80; Ex. 1001, 7:41-50, Fig. 8.) Aoki therefore discloses that the second tensioning structure and third tensioning structure are respectively provided with a plurality of air holes, through which an airflow passage is formed in the air chamber. (*Supra*, §VIII.A.)

147. Accordingly, in my opinion, Aoki discloses or renders obvious all limitations of claim 2 of the ’633 Patent.

3. Claim 3

a. The inflatable bed according to claim 1,

148. As discussed above, in my opinion Aoki discloses or renders obvious all of the limitations of claim 1. (*Supra* §X.A.1.)

b. wherein said second tensioning structure and said third tensioning structure are disposed at an interval.

149. Aoki discloses this limitation. (*Id.*, 4, Figs 2, 4.) As described above and as shown in the annotated Figures below, the second tensioning structure (in red) and third tensioning structure (in orange) are disposed at an interval:

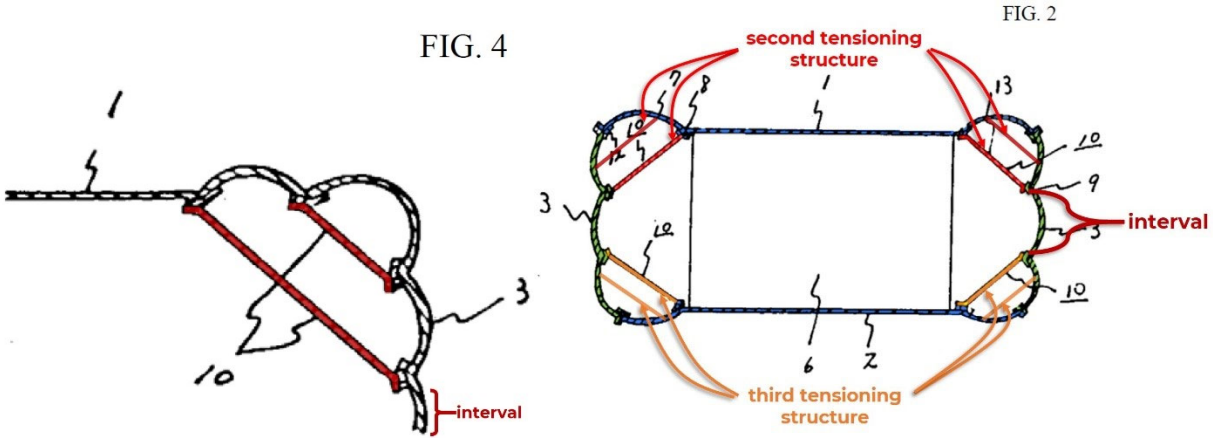

(*Id.*, Figs. 2, 4.)

150. Accordingly, in my opinion, Aoki discloses or renders obvious all limitations of claim 3 of the ’633 Patent.

4. Claim 4

a. The inflatable bed according to claim 1,

151. As discussed above, in my opinion Aoki discloses or renders obvious all of the limitations of claim 1. (*Supra* §X.A.1.)

b. wherein said second tensioning structure comprises at least two first I-beams, an outside edge and an inside edge of each of said first I-beams are respectively coupled to said side wall and said top sheet adjacent, the at least two first I-beams are disposed at an interval.

152. Aoki discloses this limitation. (Ex. 1005, 4, Fig. 4.) As discussed above, Aoki discloses a second tensioning structure comprised of multiple pairs of diagonal bracing hanging sheets (10) adhered between the upper sheet and each of the side walls. (*Id.*, 4; *supra*, §X.A.1.f.) As shown for example in annotated Figure 4 below, each of these diagonal bracing hanging sheets (in red) constitutes an I-beam:

FIG. 4

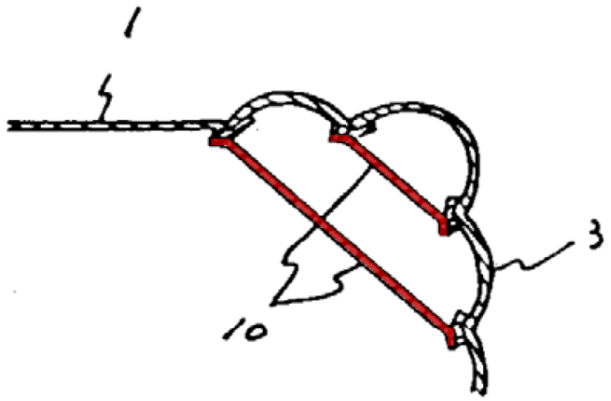

(Ex. 1005, Fig. 4.)

153. As shown in the further annotated Figure 4 below, Aoki discloses that an outside edge and an inside edge of each of the I-beams are respectively coupled to the side wall and top sheet adjacent, and the two first I-beams are disposed at an interval:

FIG. 4

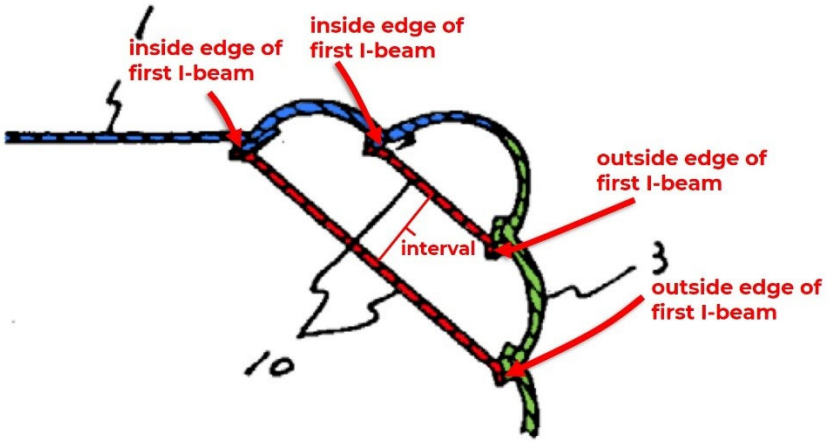

(Ex. 1005, Fig. 4.)

154. Accordingly, in my opinion, Aoki discloses or renders obvious all limitations of claim 4 of the ’633 Patent.

5. Claim 5

a. The inflatable bed according to claim 4,

155. As discussed above, in my opinion Aoki discloses or renders obvious all of the limitations of claim 4. (*Supra* §X.A.4.)

b. wherein said at least two first I-beams are spaced apart from each other at a lower surface of said top sheet.

156. Aoki discloses this limitation. (Ex. 1005, Fig. 4.) As shown in annotated Figure 4 below, Aoki discloses that two diagonal bracing hanging sheets (I-beams) comprising the second tensioning structure are spaced apart from each other at a lower surface of the upper sheet:

FIG. 4

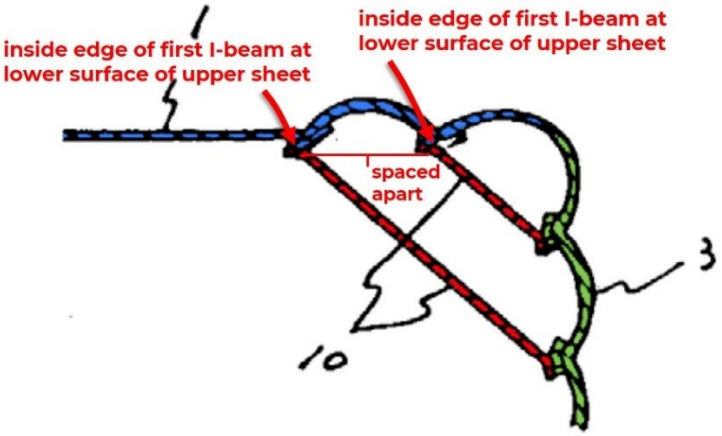

(Ex. 1005, Fig. 4.)

157. Accordingly, in my opinion, Aoki discloses or renders obvious all limitations of claim 5 of the ’633 Patent.

6. Claim 6

a. The inflatable bed according to claim 4,

158. As discussed above, in my opinion Aoki discloses or renders obvious all of the limitations of claim 4. (*Supra* §X.A.4.)

b. wherein said at least two first I-beams are disposed at an interval on an inner surface of said side wall.

159. Aoki discloses this limitation. (Ex. 1005, Fig. 4.) As shown in annotated Figure 4 below, Aoki discloses that two diagonal bracing hanging sheets (I-beams) comprising the second tensioning structure are disposed at an interval on an inner surface of the lengthwise sheet (side wall):

FIG. 4

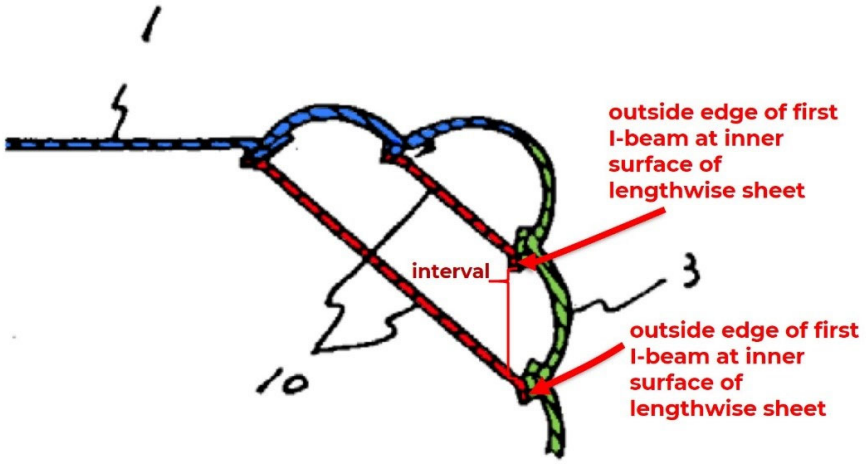

(*Id.*, Fig. 4.)

160. Accordingly, in my opinion, Aoki discloses or renders obvious all limitations of claim 6 of the ’633 Patent.

7. Claim 7

a. The inflatable bed according to claim 4,

161. As discussed above, in my opinion Aoki discloses or renders obvious all of the limitations of claim 4. (*Supra* §X.A.4.)

b. wherein said at least two first I-beams as a whole are of a continuous annular structure or a segmental annular structure.

162. Aoki discloses or suggests this limitation. (Ex. 1005, 1, 4-5, Figs. 1, 3.) As shown in Figure 1 below, Aoki discloses that the diagonal bracing hanging sheets (in red) are adhered to the lower surface of the upper sheet and along the side walls in an annular shape:

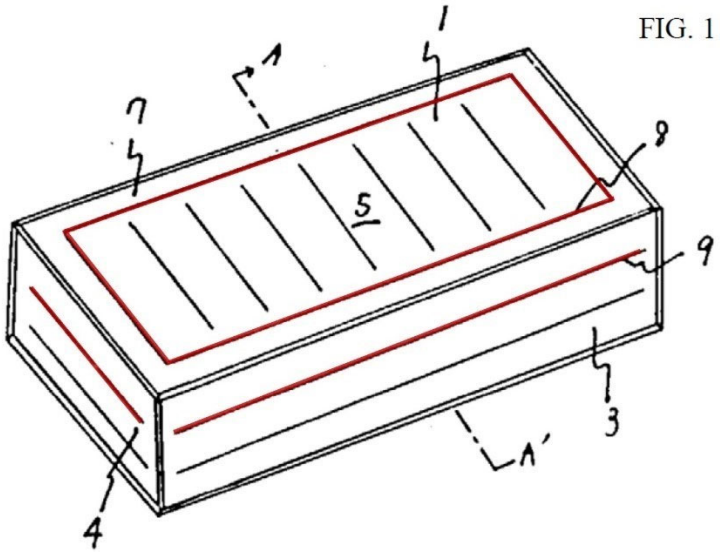

(*Id.*, Fig. 1.) As discussed above, Aoki discloses using two or more diagonal hanging bracing sheets for each corner of the inflatable bed; moreover, it would have been obvious to a POSA to apply Figure 4's teaching of multiple diagonal bracing hanging sheets to each corner of the inflatable bed disclosed in Figures 1 and 2. (*Supra*, ¶¶135-138.) Aoki discloses that using two or more diagonal bracing hanging sheets makes it possible to "achieve perpendicularity of the peripheral areas" and maintain "the upper sheet … and the side sheets … at an

approximate 90-degree angle." (Ex. 1005, 4-5.) Even if Aoki's diagonal hanging bracing sheets would not be considered to be of a "continuous annular structure" based on the adherence of the diagonal bracing hanging sheets to the lower surface of the upper sheet in a continuous rectangular shape as reflected in Figure 1, the diagonal hanging bracing sheets would certainly have been considered to be of a segmental annular structure. Indeed, the '633 Patent contemplates separate, individual I-beams spanning four sides of the inflatable bed to fall within the scope of "segmental annular structure." (*See, e.g.*, Ex. 1001, 7:41-50, 9:56-59, Figs. 8, 14.) Thus, Aoki discloses or suggests that the diagonal hanging bracing sheets (two first I-beams) provided along each side of the inflatable bed are of a continuous annular structure or segmental annular structure, as they collectively comprise a continuous or segmental annular shape.

163. Accordingly, in my opinion, Aoki discloses or renders obvious all limitations of claim 7 of the '633 Patent.

8. Claim 8

a. The inflatable bed according to claim 1,

164. As discussed above, in my opinion Aoki discloses or renders obvious all of the limitations of claim 1. (*Supra* §X.A.1.)

b. wherein said third tensioning structure comprises at least two second I-beams, an outside edge and an inside edge of each of said second I-beams are respectively coupled to the side wall and said bottom sheet adjacent, the at least two second I-beams are disposed at an interval.

165. Aoki discloses this limitation. (Ex. 1005, 4-5, Fig. 4.) This limitation is similar to the limitation of claim 4, except it applies to the third tensioning structure instead of the second tensioning structure. Because Aoki discloses providing the same diagonal bracing hanging sheets to each corner of the air mattress, Aoki discloses this limitation for the same reasons it discloses the limitation of claim 4. (*Supra*, §X.A.4; Ex. 1005, 4-5.)

166. In particular and as explained above, Aoki discloses a third tensioning structure comprised of multiple pairs of diagonal bracing hanging sheets (10) adhered between the bottom sheet and each of the side walls. (Ex. 1005, 4; *supra*, §X.A.1.f.) As also explained above, each of the diagonal bracing hanging sheets constitutes an I-beam. (*Supra*, ¶152; Ex. 1005, Fig. 4.)

167. As shown in the annotated Figure below (which is Figure 4 rotated 180 degrees about the X-axis to show the bottom orientation of the air mattress), Aoki discloses that an outside edge and an inside edge of each of these second I-beams are respectively coupled to the side wall and bottom sheet adjacent, and the two I-beams are disposed at an interval:

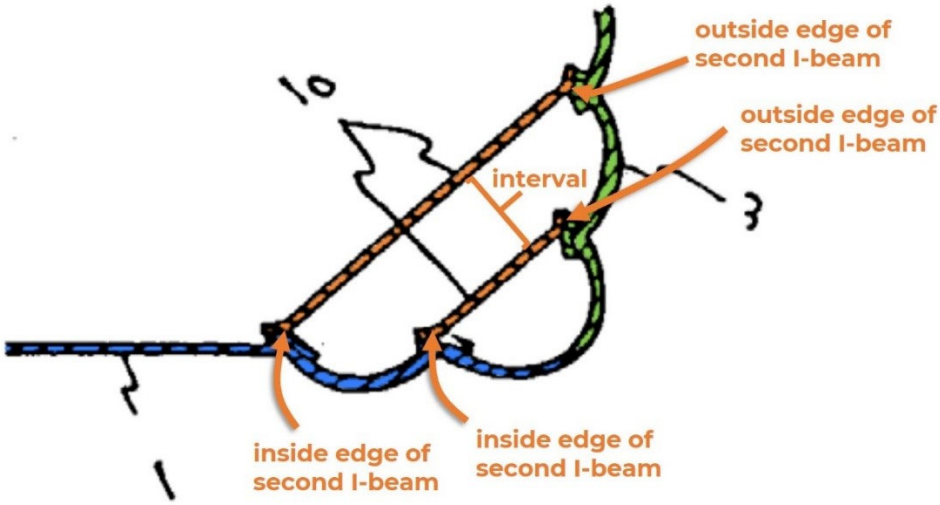

(Ex. 1005, Fig. 4.)

168. Accordingly, in my opinion, Aoki discloses or renders obvious all limitations of claim 8 of the ’633 Patent.

9. Claim 9

a. The inflatable bed according to claim 8,

169. As discussed above, in my opinion Aoki discloses or renders obvious all of the limitations of claim 8. (*Supra* §X.A.8.)

b. wherein said at least two second I-beams are spaced apart from each other at an upper surface of said bottom sheet.

170. Aoki discloses this limitation. (Ex. 1005, 4-5, Fig. 4.) This limitation is similar to the limitation of claim 5, except it applies to the third tensioning structure instead of the second tensioning structure. Because Aoki discloses providing the same diagonal bracing hanging sheets to each corner of the air

mattress, Aoki discloses this limitation for the same reasons it discloses the limitation of claim 5. (*Supra*, §X.A.5.b; Ex. 1005, 4-5.)

171. As shown in the annotated Figure below (which again is Figure 4 rotated 180 degrees about the X-axis to show the bottom orientation of the air mattress), Aoki discloses that two diagonal bracing hanging sheets (second I-beams) comprising the third tensioning structure are spaced apart from each other at an upper surface of the bottom sheet:

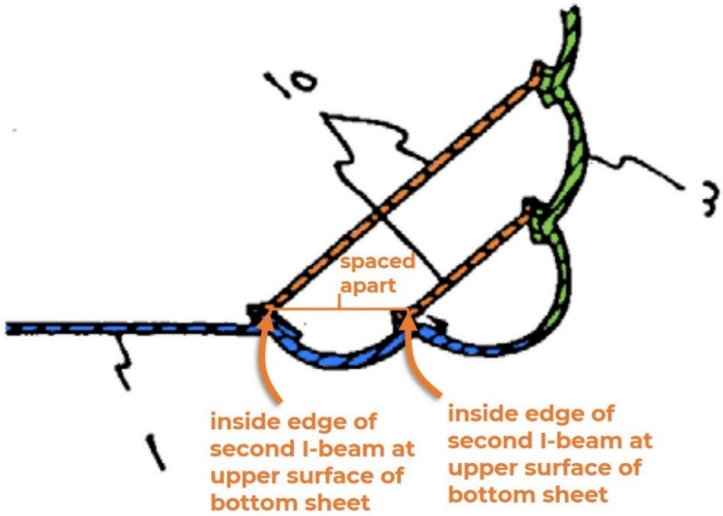

(Ex. 1005, Fig. 4.)

172. Accordingly, in my opinion, Aoki discloses or renders obvious all limitations of claim 9 of the ’633 Patent.

10. Claim 10

a. The inflatable bed according to claim 8,

173. As discussed above, in my opinion Aoki discloses or renders obvious all of the limitations of claim 8. (*Supra* §X.A.8.)

b. wherein said at least two second are disposed at an interval on the inner surface of said side wall.

174. Aoki discloses this limitation. (Ex. 1005, 4-5, Fig. 4.) First, although the claim states "said at least two second," I assume it is intended to recite "said at least two second I-beams," as "second I-beams" are referenced in claim 8. This limitation is similar to the limitation of claim 6, except it applies to the third tensioning structure instead of the second tensioning structure. Because Aoki discloses providing the same diagonal bracing hanging sheets to each corner of the air mattress, Aoki discloses this limitation for the same reasons it discloses the limitation of claim 6. (*Supra*, ¶158; Ex. 1005, 4-5.)

175. As shown in the annotated Figure below (which again is Figure 4 rotated 180 degrees about the X-axis to show the bottom orientation of the air mattress), Aoki discloses that two diagonal bracing hanging sheets (second I-beams) comprising the third tensioning structure are disposed at an interval on an inner surface of the lengthwise sheet (side wall):

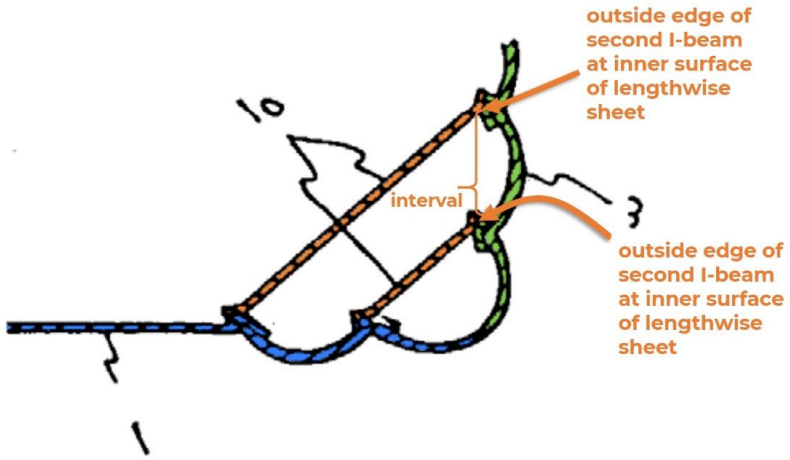

(Ex. 1005, Fig. 4.)

176. Accordingly, in my opinion, Aoki discloses or renders obvious all limitations of claim 10 of the ’633 Patent.

11. Claim 11

a. The inflatable bed according to claim 8,

177. As discussed above, in my opinion Aoki discloses or renders obvious all of the limitations of claim 8. (*Supra* §X.A.8.)

b. wherein said at least two second I-beam as a whole are of a continuous annular structure or a segmental annular structure.

178. Aoki discloses or suggests this limitation. (Ex. 1005, 4-5, Figs. 1, 2, 4.) This limitation is similar to the limitation of claim 7, except it applies to the third tensioning structure instead of the second tensioning structure. Because Aoki discloses providing the same diagonal bracing hanging sheets to each corner of the air mattress, Aoki discloses this limitation for the same reasons it discloses the limitation of claim 7. (*Supra*, ¶161; Ex. 1005, 4-5.)

179. As shown in Figure 1 below, Aoki discloses that the diagonal bracing hanging sheets (in orange) comprising the third tensioning structure collectively comprise an annular shape:

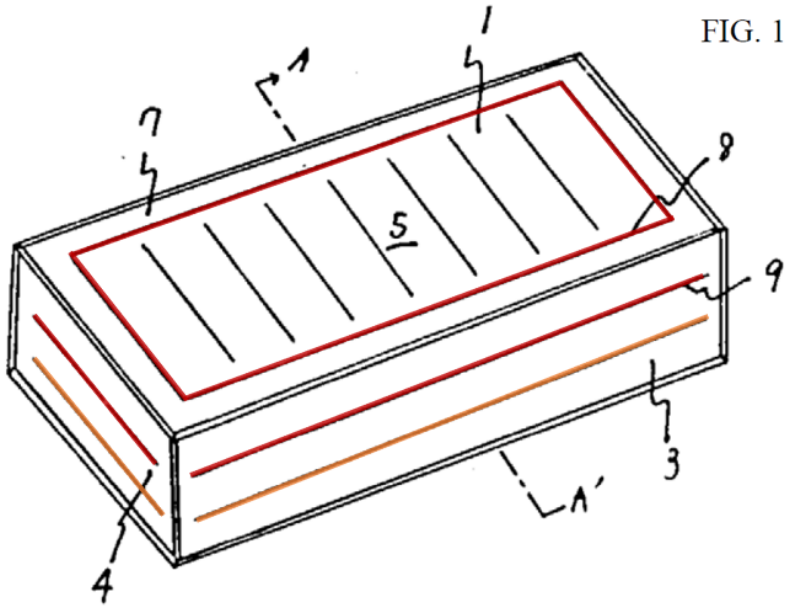

(Ex. 1005, Fig. 1.) Although the bottom sheet is not shown in this Figure, the annular shape can further be seen in the diagonal bracing hanging sheets comprising the second tensioning structure (in red) in the annotated Figure 1 above. (*See supra*, ¶162.) This orientation would be the same for the diagonal bracing hanging sheets comprising the third annular structure, as Aoki discloses the same use of diagonal bracing hanging sheets for all corners of the air mattress in order to maintain rough perpendicularity of the entire periphery. (Ex. 1005, 4-5; Figs. 1, 2.)

180. As discussed above, Aoki discloses using two or more diagonal hanging bracing sheets for each corner of the inflatable bed; moreover, it would have been obvious to a POSA to apply Figure 4's teaching of multiple diagonal bracing hanging sheets to each corner of the inflatable bed disclosed in Figures 1

and 2. (*Supra*, ¶¶135-138.) Aoki discloses that using two or more diagonal bracing hanging sheets makes it possible to "achieve perpendicularity of the peripheral areas" and maintain "the lower sheet and the side sheets … at an approximate 90-degree angle." (Ex. 1005, 4-5.) Even if Aoki's diagonal hanging bracing sheets would not be considered to be of a "continuous annular structure," the diagonal hanging bracing sheets would certainly have been considered to be of a segmental annular structure. Indeed, the '633 Patent contemplates separate, individual I-beams spanning four sides of the inflatable bed to fall within the scope of "segmental annular structure." (*See, e.g.*, Ex. 1001, 7:41-50, 9:56-59, Figs. 8, 14.) Thus, Aoki discloses or suggests that the diagonal hanging bracing sheets (two second I-beams) provided along each side of the inflatable bed are of a continuous annular structure or segmental annular structure, as they collectively comprise a continuous or segmental annular shape.

181. Accordingly, in my opinion, Aoki discloses or renders obvious all limitations of claim 11 of the '633 Patent.

12. Claim 17

a. The inflatable bed according to claim 1,

182. As discussed above, in my opinion Aoki discloses or renders obvious all of the limitations of claim 1. (*Supra* §X.A.1.)

b. wherein a location where said top sheet is located in the inside part of an upper edge of said second tensioning structure is lower than the location where said top sheet is located in the outside part of the upper edge of said second tensioning structure.

183. A POSA's understanding of this limitation would be informed by Figure 5 of the '633 Patent, copied below:

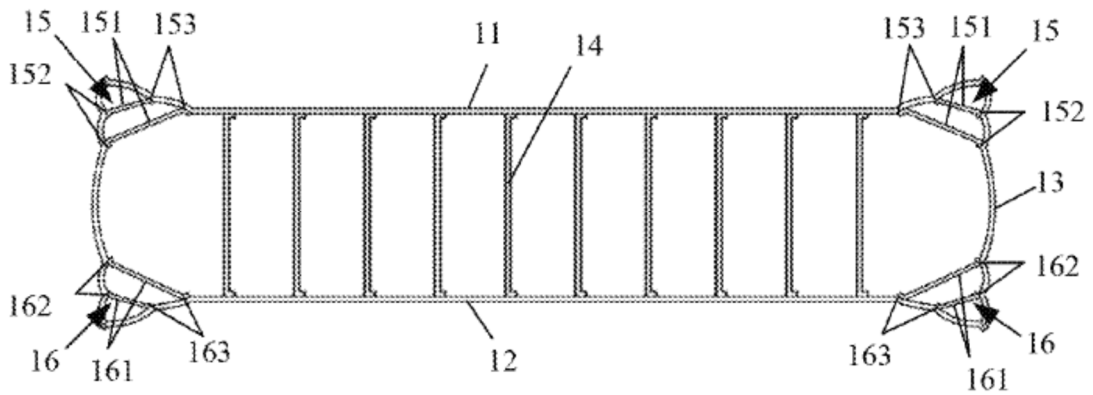

(*Id.*, Fig. 5.) As shown in the below annotated close-up of the upper right corner of Figure 5, it appears that the green dashed line reflects the "location where said top sheet is located" at "the inside part" of an upper edge of the tensioning structure (i.e., closer to the inside portion of the inflatable bed), and the blue dashed line reflects a "location where said top sheet is located" at "the outside part" of this upper edge (i.e., closer to the outside portion of the inflatable bed). As reflected by the two dashed lines, the "location where said top sheet is located" at the inside part (green dashed line) is "lower" (closer to the ground) than the "location where said top sheet is located" at the outside part (blue dashed line):

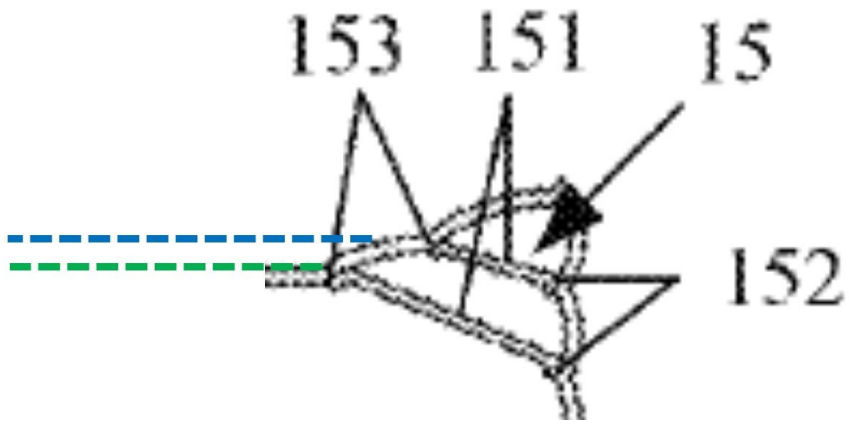

184. With this understanding of the meaning of this claim limitation, Aoki discloses this limitation. (Ex. 1005, Fig. 4.) As shown in the annotated Figure 4 below, Aoki discloses that a location where the top sheet is located at the inside part of an upper edge (green dashed line) of the second tensioning structure is lower than a location where the top sheet is located at the outside part of the upper edge (blue dashed line):

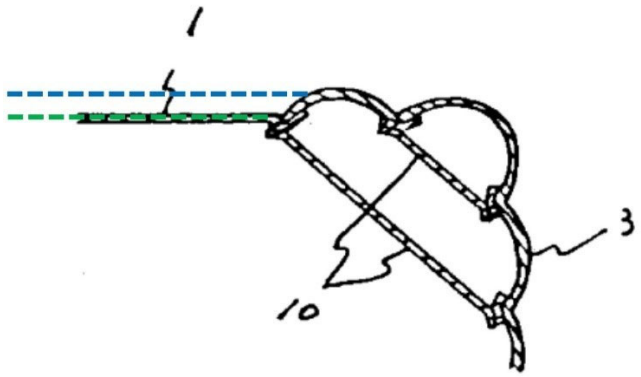

(*Id*.)

185. Accordingly, in my opinion, Aoki discloses or renders obvious all limitations of claim 17 of the ’633 Patent.

B. Aoki in view of Lin ’773 Renders Obvious Claims 1-14, 16, and 17 of the ’633 Patent

186. In my opinion, Aoki in view of Lin ’773 renders obvious claims 1-14, 16, and 17 of the ’633 Patent.

1. Claim 1

187. As discussed above, in my opinion Aoki discloses or renders obvious all of the limitations of claim 1. (*Supra* §§X.A.1.) However, if the Board believes that Aoki’s disclosure that the diagonal bracing hanging sheets are adhered to the outer surfaces (i.e., the upper sheet, bottom sheet, and lengthwise and widthwise sheets) of Aoki at “adhesive positions” of the diagonal hanging bracing sheets and “adhesive sites” of the outer surfaces means that Aoki does not disclose that the diagonal hanging bracing sheets are “coupled” to the outer surfaces as recited in claim 1, this claim nonetheless would have been obvious over Aoki in view of Lin ’773.

188. Aoki was published on June 28, 1972. (Ex. 1005, Title Page.) A POSA considering materials for Aoki’s tensioning structures in 2016 would have naturally looked to more recent teachings and knowledge in the art regarding suitable and advantageous materials and tensioning structures.

189. Lin ’773 discloses improved tensioning structures that “join two pieces of material that are urged away from one another in use,” including sheets comprising a double-layer air mattress. (*Supra*, §IX.D; Ex.1009, 7:9-14, 7:62-8:3.)

As shown in annotated Figure 1 below, Lin ’773 discloses that its tensioning structures may comprise a “plurality of substantially parallel strands 32” (yellow) that are captured between two weld strips 31 (red) at the top and bottom of the strands:

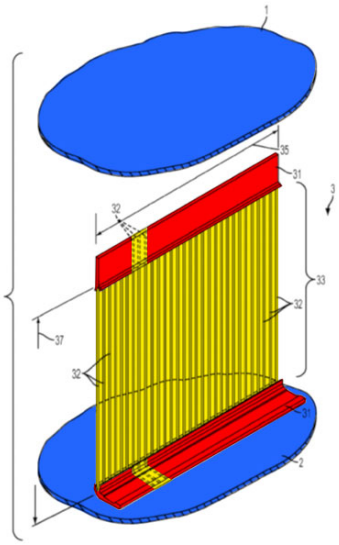

FIG. 1

(Ex. 1009, 7:17-22, 12:22-31, Fig. 1.) The weld strips, in turn, are welded to an “upper material 1” and “lower material 2,” such as the top and bottom sheets (blue) of an inflatable bed, as shown above and further in annotated Figure 3 below:

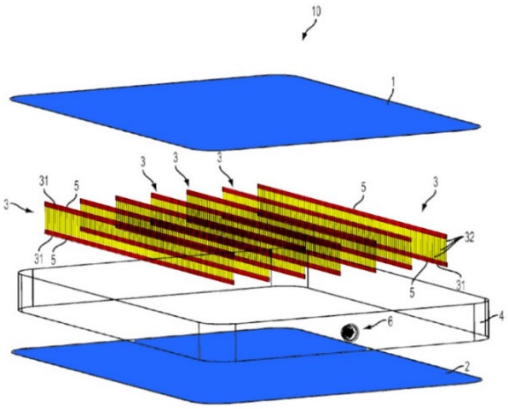

FIG. 3

(*Id.*, 7:22-25, 7:53-66, Fig. 3.)

190. Lin '773 teaches that such tensioning structures could be used to join the top and bottom sheets of a double-layer mattress, or "in any application where a lightweight, packable structure is needed to join two pieces of material that are urged away from one another in use," including "in combination with one another as required or desired for a particular design." (Ex. 1009, 7:4-14, 7:53-63.) Lin '773 further discloses that its tensioning structures serve to maintain the rectangular shape of the inflatable bed by preventing the surfaces of the bed from urging away from each other and thus taking on the shape of a balloon (*id.*, 1:38-52, 7:16-25, 8:47-55)—the same problem in the art to which Aoki is addressed (Ex. 1005, 1-2, 4-5). Lin '773 further teaches that its tensioning structures provide various advantages over known tensioning structures, including providing high tensile strength while minimizing weight, materials, and costs. (*Supra*, §IX.D; Ex. 1009, 1:20-22 (noting that the disclosed tensioning structures are "light in weight and low in cost"); 6:52-56 ("The tensioning structures are lightweight and occupy minimal volume when the device is deflated and packed away, while also functioning as a strong and durable internal support upon inflation and use of the inflatable device."); 8:67-9:1 ("These regular threads provide substantial tensile strength at a very low cost."); 9:52-55 ("The above-described exemplary arrangement of tensioning structure 3 achieves high tensile strength while

promoting light weight and low packed volume of the finished inflatable product."); 10:19-20 ("Because of use of strands 32 rather than PVC sheets, the overall weight of mattress 10 can also be reduced."); 16:17-31 ("In this way, the tensioning structure performs well an internal structure of the inflatable product, while facilitating an overall reduction in weight and deflated/folded volume of the inflatable product."); 18:25-30 ("A tensioning structure in accordance with the present disclosure is also a low-cost option for imparting a desired structure and shape to an inflatable device.").)

191. A POSA would have thus been motivated to employ Lin '773's tensioning structures as the tensioning structures in Aoki's air mattress, to achieve the advantages disclosed by Lin '773. Aoki does not limit the materials or attachment methods that may be used for its tensioning structures, but rather generally states that the tensioning structures may be sewn or "adhere[d]" to the top sheet, bottom sheet, and side walls. (Ex. 1005, 3.) Lin '773, in turn, discloses advantageous materials, including weld strips and strands, as well as advantageous attachment methods, including welding, to achieve the objective of providing high tensile strength to maintain the shape of an inflatable bed. (Ex. 1009, 11:30-49.) A POSA would have a reasonable expectation of success in using Lin '773's design as a tensioning structure, as use of such materials as tensioning structures was well known before the Priority Date. (*Supra*, ¶57.)

192. Moreover, a POSA would have known that it would be advantageous to use the same material for both Lin '773's weld strips and Aoki's top sheet, bottom sheet, and side walls to achieve a secure welded connection. A POSA would have known that use of plastic material for the outside surfaces and tensioning structures of Aoki would have been a simple substitution of more modern materials in place of Aoki's hanging sheets. (*See, e.g.*, Ex. 1010, 1:29-44, 6:15-30 (disclosing use of PVC for outside surfaces and tensioning structures, and attachment of such surfaces and structures "by using any known heat welding, fusing, or bonding technique").) Indeed, I understand that Patent Owner's own expert in a prior IPR proceeding asserted that "using PVC for the interior and exterior components of a mattress was well-known in the art and in the background knowledge of a PHOSITA" before the Priority Date, and that "using the same material as the top and bottom side of the mattress and the extending parts would ensure that they could be suitably welded together." (Ex. 1043, ¶¶21, 105.) Thus, a POSA would have known that using Lin '773's design for the tensioning structures in Aoki would be a simple substitution of one known element for another, and would have yielded predictable results.

193. Accordingly, a POSA would have been motivated to use Lin '773's tensioning structures for Aoki's diagonal hanging bracing sheets, and would have known that using the same plastic material for Lin '773's weld strips and the outer

surfaces of Aoki would advantageously allow for a secure welded connection between the tensioning structures and outer surfaces. As a result of this welded connection, (a) upper end and lower end of Lin '773's tensioning structures serving as Aoki's vertical hanging sheets would be respectively coupled to the top and bottom sheets; (b) the outside edges of Lin '773's tensioning structures serving as Aoki's top diagonal bracing hanging sheets would be coupled to the side wall and the inside edges coupled to the top sheet; and (c) the outside edges of Lin '773's tensioning structures serving as Aoki's bottom diagonal bracing hanging sheets would be coupled to the side wall and the inside edges coupled to the bottom sheet, as recited in claim 1 of the '633 Patent.

194. Accordingly, in my opinion, Aoki in view of Lin '773 renders obvious claim 1 of the '633 Patent.

2. Claim 2

a. The inflatable bed according to claim 1,

195. As discussed above, in my opinion Aoki, either individually or in view of Lin '773, discloses or renders obvious all of the limitations of claim 1. (*Supra* §§X.A.1, X.B.1.)

b. wherein said second tensioning structure and said third tensioning structure are respectively provided with a plurality of air holes, through which an airflow passage is formed in said air chamber.

196. As explained above, Aoki discloses or suggests this limitation. (*Supra*, §X.A.2.b.) However, if the Board disagrees that Aoki's second and third tensioning structures (diagonal bracing hanging sheets connecting the upper sheet and side walls, and bottom sheet and side walls, respectively) meet this limitation, it is nonetheless disclosed by Lin '773.

197. As described above and as shown in annotated Figures 1 and 3 below, Lin '773 discloses that its tensioning structures may comprise a "plurality of substantially parallel strands 32" (yellow) that are captured between two weld strips 31 (red), which are in turn welded to the top and bottom sheets (blue) of an inflatable bed:

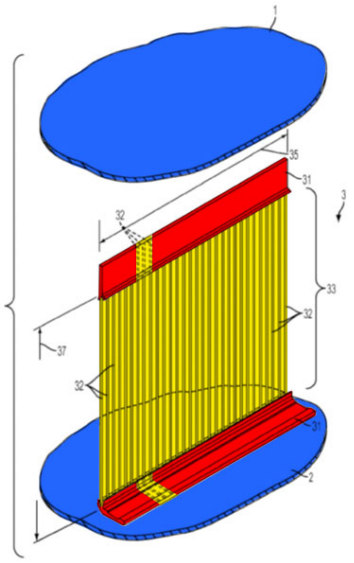

FIG. 1

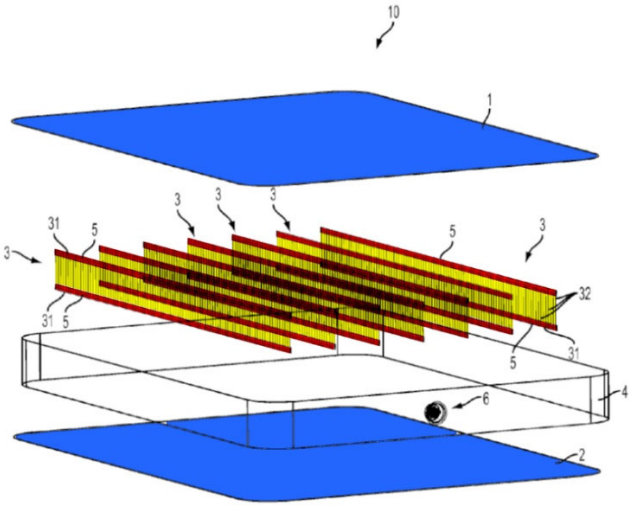

FIG. 3

(Ex. 1009, 7:17-25, 7:53-66, Figs. 1, 3.)

198. A POSA would have understood the space between each strand of Lin ’773’s tensioning structure to constitute an opening through which air may flow, as shown in the annotated Figure 1 below:

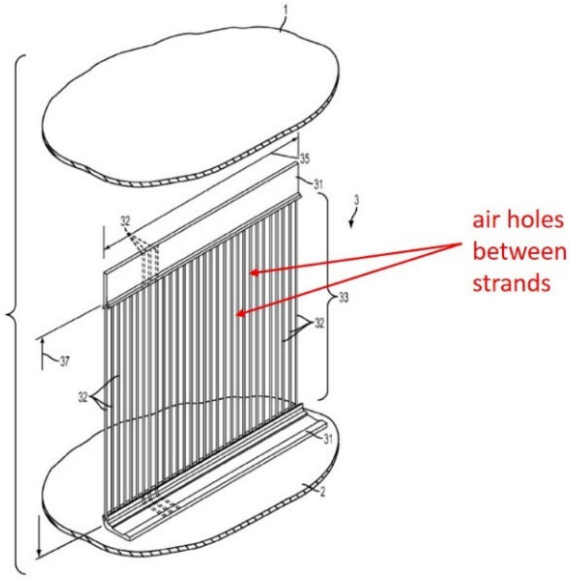

FIG. 1

(*Id.*, Fig. 1.) Indeed, Lin ’773 does not disclose any other means for the air to flow through the air chamber of the bed after entering from the valve on the side wall, and thus a POSA would understand that air would flow through the openings between the strands of Lin ’773’s tensioning structure to pressurize the air within the chamber. (*Id.*, 8:47-55.) A POSA thus would have understood Lin ’773’s tensioning structures to be provided with a plurality of air holes through which an airflow passage is formed in the air chamber of the inflatable bed. (*Supra,* §VIII.A; Ex. 1035, 3 (defining “hole” as “an opening through something”; “an area

where something is missing”).) Moreover, use of such air holes in tensioning structures was well known in the art. (*See, e.g.*, Ex. 1011, 3:20-22, 3:38-41, Figs. 2, 8; Ex. 1013, ¶[0068]; Ex. 1014, ¶¶[0023]-[0024], Figs. 5, 7, 8.; Ex. 1025, 3:6-10, Fig. 3; Ex. 1041, 3:55-67, 5:14-30, 5:47-55; Ex. 1015, ¶¶[0041], [0054]; Ex. 1039, 5:45-62, 6:8-11.)

199. In addition, as shown in annotated Figure 1 below, Aoki discloses that the diagonal bracing hanging sheets form depression lines (red for the hanging sheets comprising the second tensioning structure; orange for the hanging sheets comprising the third tensioning structure) at their adhesive positions (8) and (9) when coupled to the top, bottom, lengthwise, and widthwise sheets, and that these depression lines do not span the entire length of these sheets, but rather stop short on either end:

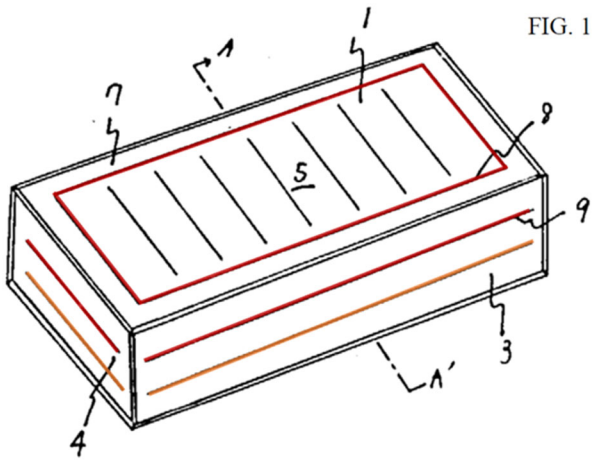

(Ex. 1005, Fig. 1.) Accordingly, when oriented this way in Aoki, Lin ’773’s tensioning structures would have gaps in each corner, through which air may flow

within the air chamber. As discussed above, the ’633 Patent identifies such tensioning structures with gaps in each corner (as in Figure 8 below) as providing a plurality of air holes as recited in claim 2:

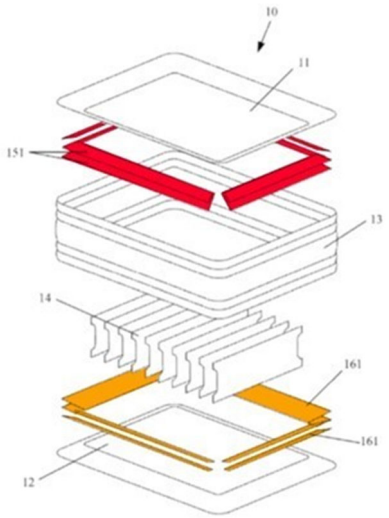

Fig. 8

(*Supra*, §VIII.A; Ex. 1001, 7:41-50, Fig. 8.)

200. In addition, it was well-known before the Priority Date that tensioning structures of an inflatable bed could allow for airflow passage within the air chamber by one or both of two means: (1) using a continuous strip around the entire periphery of the air chamber, with openings placed in the strip to allow air to flow through; and/or (2) using multiple strip segments that did not extend around the entire periphery of the air chamber, thus leaving gaps in the corners through which air could flow. (*See, e.g.*, Ex. 1011, 3:12-22 & Fig. 2 (continuous strip with openings), 3:45-4:5 & Fig. 8 (segmental strips leaving gaps in the corners).) A POSA would have known that either was a viable option for providing a tensioning

structure, and that there were advantages and disadvantages to both. For example, a POSA would have known that a continuous tensioning structure would provide additional pull strength around all four corners of the air mattress, thereby preventing potential bulging of the sides and ensuring that the mattress is properly aligned and has more uniform corners. (*See, e.g.*, Ex. 1014, ¶¶[0007]-[0011], Figs. 3-8.) Conversely, a segmental tensioning structure would typically require less material and weight, and potentially less cost. The choice of which to pursue would be dictated by such factors as availability of materials, manufacturing capabilities, specifications for the air bed, and costs. A POSA would have known that while both options presented trade-offs, either would be obvious to try, and a POSA would have had a reasonable expectation of success with either. Indeed, the '633 Patent itself discloses both as viable alternatives. (Ex. 1001, 3:56-4:10, 7:41-45, Figs. 7, 8, 10, 11, 14, 15, 17, 18.)

201. As discussed above, a POSA would have been motivated to employ Lin '773's tensioning structures (including Lin '773's weld strips) in Aoki's air mattress. (*Supra*, ¶¶188-193.) Accordingly, the combination of Aoki and Lin '773 disclose or suggest second and third tensioning structures respectively provided with a plurality of air holes, through which an airflow passage is formed in said air chamber.

202. Accordingly, in my opinion, Aoki in view of Lin ’773 renders obvious claim 2 of the ’633 Patent.

3. Claim 3

a. The inflatable bed according to claim 1,

203. As discussed above, in my opinion Aoki, either individually or in view of Lin ’773, discloses or renders obvious all of the limitations of claim 1. (*Supra* §§X.A.1, X.B.1.)

b. wherein said second tensioning structure and said third tensioning structure are disposed at an interval.

204. As discussed above, Aoki discloses this limitation. (*Supra*, ¶149.) As also discussed above, a POSA would have been motivated to employ Lin ’773’s tensioning structures in Aoki’s air mattress. (*Supra*, ¶¶188-193.) Modifying Aoki to employ Lin ’773’s tensioning structures as the tensioning structures in Aoki’s air mattress would not alter the disposition of the second and third tensioning structures at an interval, as explained above (*supra*, ¶149).

205. Accordingly, in my opinion, Aoki in view of Lin ’773 renders obvious claim 3 of the ’633 Patent.

4. Claim 4

a. The inflatable bed according to claim 1,

206. As discussed above, in my opinion Aoki, either individually or in view of Lin '773, discloses or renders obvious all of the limitations of claim 1. (*Supra* §§X.A.1, X.B.1.)

b. wherein said second tensioning structure comprises at least two first I-beams, an outside edge and an inside edge of each of said first I-beams are respectively coupled to said side wall and said top sheet adjacent, the at least two first I-beams are disposed at an interval.

207. As explained above, and as shown in the annotated Figure 4 below, Aoki discloses that an outside edge and an inside edge of each of its diagonal bracing hanging sheets are respectively coupled to the side wall and top sheet adjacent, and the hanging sheets are disposed at an interval:

FIG. 4

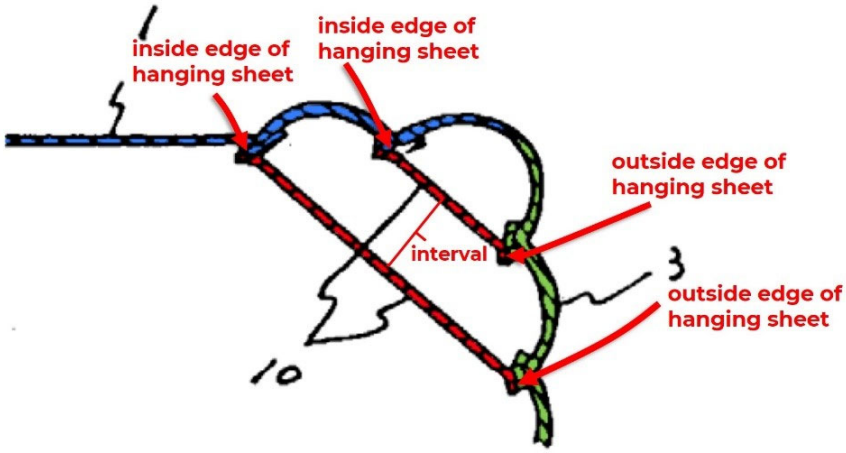

(Ex. 1005, Fig. 4; *supra*, ¶¶152-0.)

208. As shown in annotated Figure 3 below, Lin '773 discloses that its tensioning structures (3, yellow and red) comprise I-beams:

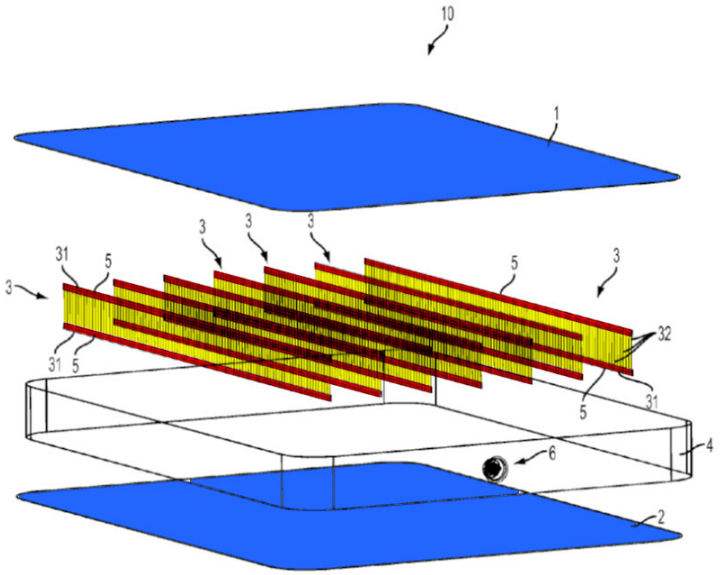

FIG. 3

(Ex. 1009, 7:53-8:3, 8:30-36, Fig. 3.)

209. As discussed above, a POSA would have been motivated to employ Lin '773's tensioning structures as the diagonal bracing hanging sheets in Aoki's air mattress. (*Supra*, ¶¶188-193.) Modifying Aoki to thus employ Lin '773's I-beam tensioning structures would not alter the coupling of the two first I-beams to the side wall and top sheet adjacent, and the disposition of the two first I-beams at an interval. The combination of Aoki and Lin '773 therefore discloses or suggests a second tensioning structure that comprises at least two first I-beams, with an outside edge and an inside edge of each I-beam respectively coupled to the side wall and top sheet adjacent, and the I-beams are disposed at an interval.

210. Accordingly, in my opinion, Aoki in view of Lin ’773 renders obvious claim 4 of the ’633 Patent.

5. Claim 5

a. The inflatable bed according to claim 4,

211. As discussed above, in my opinion Aoki, either individually or in view of Lin ’773, discloses or renders obvious all of the limitations of claim 4. (*Supra* §§X.A.4, X.B.4.)

b. wherein said at least two first I-beams are spaced apart from each other at a lower surface of said top sheet.

As discussed above, and as shown in the annotated Figure 4 below, Aoki discloses that two diagonal bracing hanging sheets comprising the second tensioning structure are spaced apart from each other at a lower surface of the upper sheet:

FIG. 4

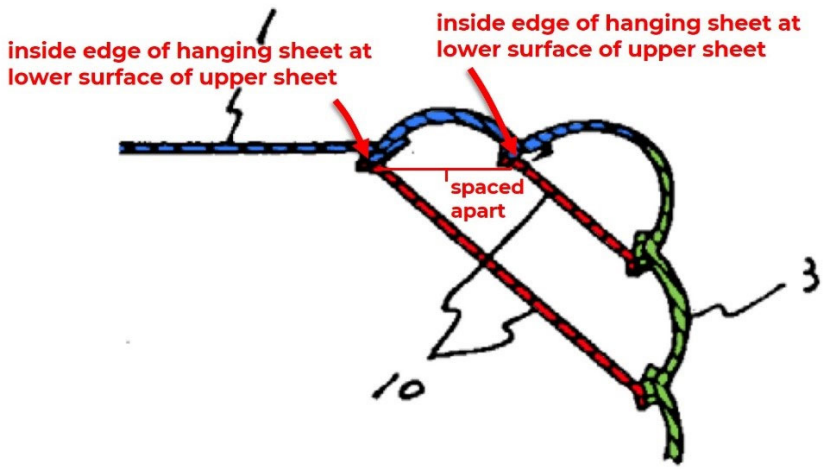

(Ex. 1005, Fig. 4; *supra*, ¶156.) As also discussed above, a POSA would have

been motivated to employ Lin ’773’s tensioning structures as the diagonal bracing hanging sheets in Aoki’s air mattress. (*Supra*, ¶¶188-193.) Modifying Aoki to employ Lin ’773’s I-beam tensioning structures as the tensioning structures in Aoki’s air mattress would not alter the spaced-apart disposition of the two first I-beams at a lower surface of the top sheet, as explained above (*supra*, ¶156).

212. Accordingly, in my opinion, Aoki in view of Lin ’773 renders obvious claim 5 of the ’633 Patent.

6. Claim 6

a. The inflatable bed according to claim 4,

213. As discussed above, in my opinion Aoki, either individually or in view of Lin ’773, discloses or renders obvious all of the limitations of claim 4. (*Supra* §§X.A.4, X.B.4.)

b. wherein said at least two first I-beams are disposed at an interval on an inner surface of said side wall.

As discussed above, and as shown in the annotated Figure 4 below, Aoki discloses that two diagonal bracing hanging sheets comprising the second tensioning structure are disposed at an interval on an inner surface of the lengthwise sheet (side wall):

FIG. 4

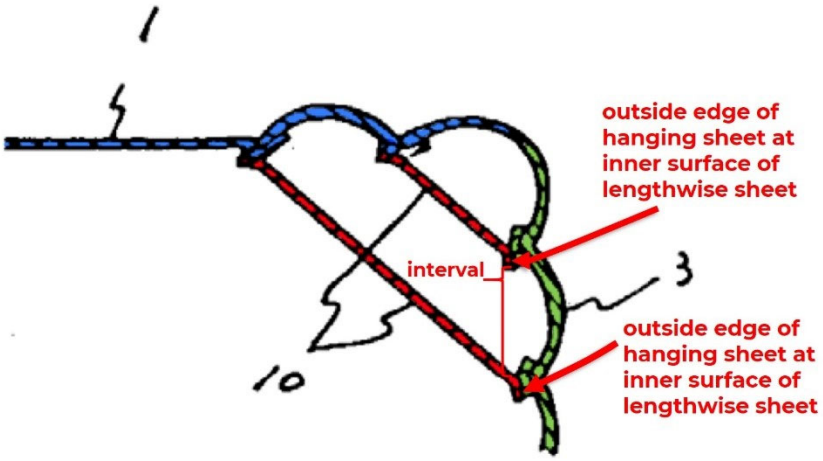

(Ex. 1005, Fig. 4; *supra*, ¶159.) As also discussed above, a POSA would have been motivated to employ Lin '773's tensioning structures as the diagonal bracing hanging sheets in Aoki's air mattress. (*Supra*, ¶¶188-193.) Modifying Aoki to employ Lin '773's I-beam tensioning structures as the tensioning structures in Aoki's air mattress would not alter the disposition of the two first I-beams at an interval on an inner surface of the side wall, as explained above (*supra*, ¶159).

214. Accordingly, in my opinion, Aoki in view of Lin '773 renders obvious claim 6 of the '633 Patent.

7. Claim 7

a. The inflatable bed according to claim 4,

215. As discussed above, in my opinion Aoki, either individually or in view of Lin '773, discloses or renders obvious all of the limitations of claim 4. (*Supra* §§X.A.4, X.B.4.)

b. wherein said at least two first I-beams as a whole are of a continuous annular structure or a segmental annular structure.

216. As discussed above, Aoki discloses that its second tensioning structure (diagonal bracing hanging sheets adhered between the upper sheet and each of the side walls) as a whole are of a continuous annular structure or a segmental annular structure. (*Supra*, ¶162.) As also discussed above, a POSA would have been motivated to employ Lin '773's tensioning structures as the diagonal bracing hanging sheets in Aoki's air mattress. (*Supra*, ¶¶188-193.) Modifying Aoki to employ Lin '773's tensioning structures as the tensioning structures in Aoki's air mattress would not alter the resulting continuous or segmental annular structure of the two first I-beams, as explained above (*supra*, ¶162).

217. Accordingly, in my opinion, Aoki in view of Lin '773 renders obvious claim 7 of the '633 Patent.

8. Claim 8

a. The inflatable bed according to claim 1,

218. As discussed above, in my opinion Aoki, either individually or in view of Lin '773, discloses or renders obvious all of the limitations of claim 1. (*Supra* §§X.A.1, X.B.1.)

b. wherein said third tensioning structure comprises at least two second I-beams, an outside edge and an inside edge of each of said second I-beams are respectively coupled to the side wall and said bottom sheet adjacent, the at least two second I-beams are disposed at an interval.

219. As shown in annotated Figure 3 below, Lin '773 discloses that its tensioning structures (3, yellow and red) may comprise I-beams:

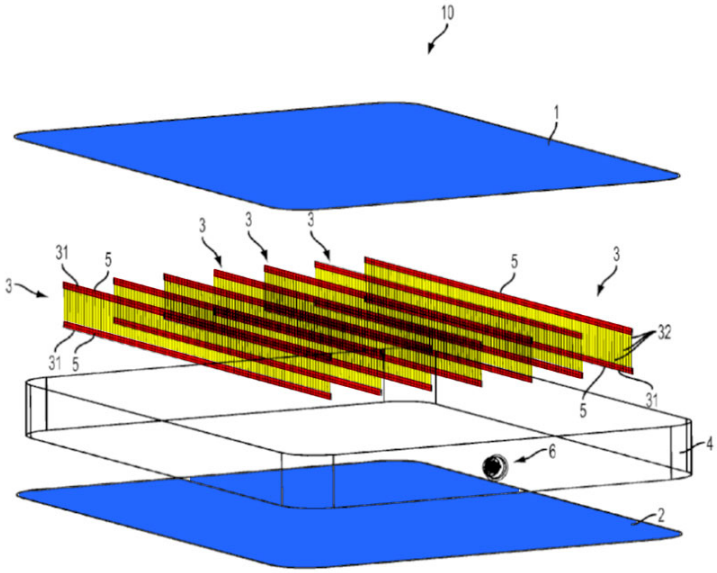

FIG. 3

(Ex. 1009, 7:53-8:3, 8:30-36, Fig. 3.)

As discussed above, and as shown in the annotated Figure below, Aoki discloses that an outside edge and an inside edge of each of its diagonal bracing hanging sheets are respectively coupled to the side wall and bottom sheet adjacent, and the two hanging sheets are disposed at an interval:

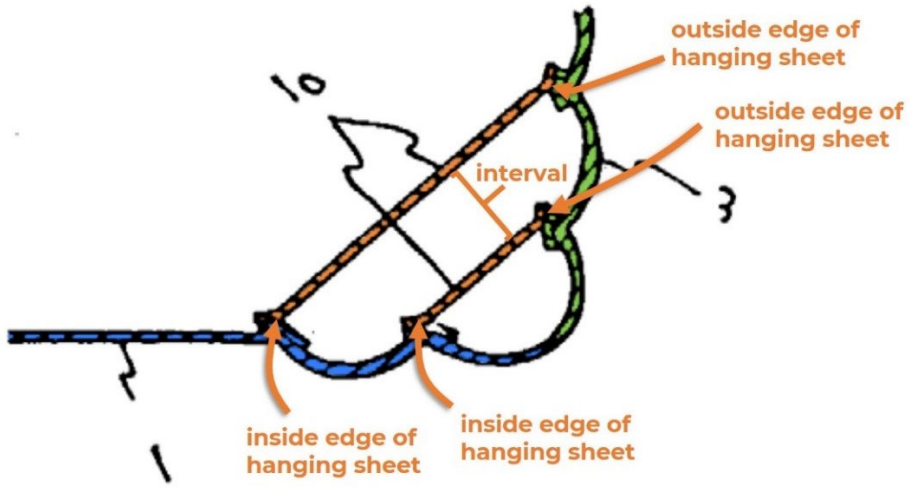

(Ex. 1005, Fig. 4; *supra*, ¶¶166-167.)

220. As also discussed above, a POSA would have been motivated to employ Lin '773's tensioning structures as the tensioning structures in Aoki's air mattress. (*Supra*, ¶¶188-193.) Modifying Aoki to employ Lin '773's tensioning structures as the tensioning structures in Aoki's air mattress would not alter the coupling of the two second I-beams to the side wall and bottom sheet adjacent, and the disposition of the two second I-beams at an interval. The combination of Aoki and Lin '773 therefore discloses or suggests a third tensioning structure that comprises at least two second I-beams, with an outside edge and an inside edge of each I-beam respectively coupled to the side wall and bottom sheet adjacent, and the I-beams are disposed at an interval.

221. Accordingly, in my opinion, Aoki in view of Lin '773 renders obvious claim 8 of the '633 Patent.

9. Claim 9

a. The inflatable bed according to claim 8,

222. As discussed above, in my opinion Aoki, either individually or in view of Lin '773, discloses or renders obvious all of the limitations of claim 8. (*Supra* §§X.A.8, X.B.8.)

b. wherein said at least two second I-beams are spaced apart from each other at an upper surface of said bottom sheet.

223. As discussed above, and as shown in the annotated Figure below, Aoki discloses that two diagonal bracing hanging sheets comprising the third tensioning structure are spaced apart from each other at an upper surface of the bottom sheet:

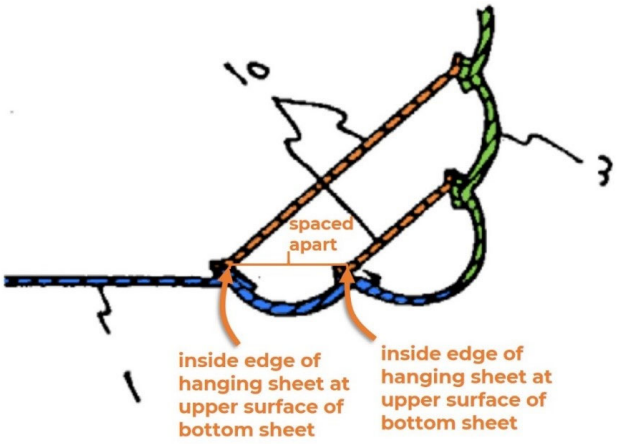

(Ex. 1005, Fig. 4; *supra*, ¶¶170-171.) As also discussed above, a POSA would have been motivated to employ Lin '773's tensioning structures as the tensioning structures in Aoki's air mattress. (*Supra*, ¶¶188-193.) Modifying Aoki to employ Lin '773's tensioning structures as the tensioning structures in Aoki's air mattress

would not alter the spaced-apart disposition of the two second I-beams at an upper surface of the bottom sheet, as explained above (*supra*, ¶¶170-171).

224. Accordingly, in my opinion, Aoki in view of Lin ’773 renders obvious claim 9 of the ’633 Patent.

10. Claim 10

a. The inflatable bed according to claim 8,

225. As discussed above, in my opinion Aoki, either individually or in view of Lin ’773, discloses or renders obvious all of the limitations of claim 8. (*Supra* §§X.A.8, X.B.8.)

b. wherein said at least two second are disposed at an interval on the inner surface of said side wall.

As discussed above, and as shown in the annotated Figure below, Aoki discloses that two diagonal bracing hanging sheets comprising the third tensioning structure are disposed at an interval on an inner surface of the lengthwise sheet (side wall):

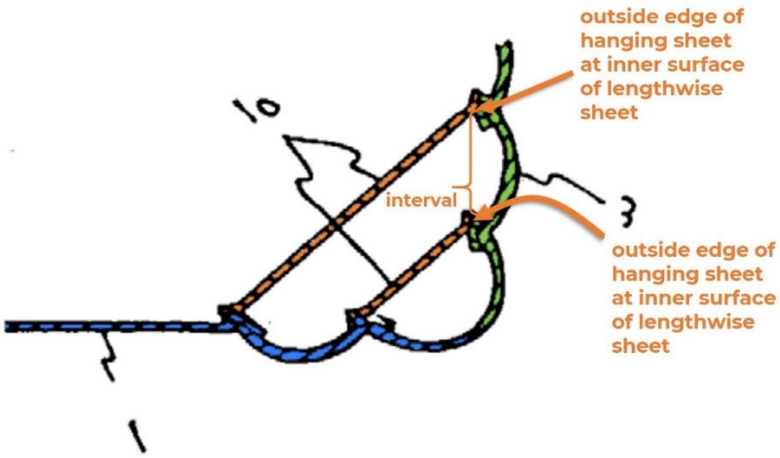

(Ex. 1005, Fig. 4; *supra*, ¶¶174-175.) As also discussed above, a POSA would have been motivated to employ Lin '773's tensioning structures as the tensioning structures in Aoki's air mattress. (*Supra*, ¶¶188-193.) Modifying Aoki to employ Lin '773's tensioning structures as the tensioning structures in Aoki's air mattress would not alter the disposition of the two second I-beams at an interval on an inner surface of the side wall, as explained above (*supra*, ¶¶174-175).

226. Accordingly, in my opinion, Aoki in view of Lin '773 renders obvious claim 10 of the '633 Patent.

11. Claim 11

a. The inflatable bed according to claim 8,

227. As discussed above, in my opinion Aoki, either individually or in view of Lin '773, discloses or renders obvious all of the limitations of claim 8. (*Supra* §§X.A.8, X.B.8.)

b. wherein said at least two second I-beam as a whole are of a continuous annular structure or a segmental annular structure.

228. As discussed above, Aoki discloses that its third tensioning structure (diagonal bracing hanging sheets adhered between the bottom sheet and each of the side walls) as a whole are of a continuous annular structure or a segmental annular structure. (*Supra*, ¶¶178-180.) As also discussed above, a POSA would have been motivated to employ Lin '773's tensioning structures as the tensioning structures in

Aoki's air mattress. (*Supra*, ¶¶188-193.) Modifying Aoki to employ Lin '773's tensioning structures as the third tensioning structure in Aoki's air mattress would not alter the resulting continuous or segmental annular structure of the two second I-beams, as explained above (*supra*, ¶¶178-180).

229. Accordingly, in my opinion, Aoki in view of Lin '773 renders obvious claim 11 of the '633 Patent.

12. Claim 12

a. The inflatable bed according to claim 1,

230. As discussed above, in my opinion Aoki, either individually or in view of Lin '773, discloses or renders obvious all of the limitations of claim 1. (*Supra* §§X.A.1, X.B.1.)

b. wherein said first tensioning structure, said second tensioning structure and said third tensioning structure are all made of thermoplastic plastic sheet.

231. Lin '773 discloses that its tensioning structures may include weld strips that are "made of PVC," and that the weld strips may be welded to the top and bottom sheets of the inflatable bed (upper and lower materials 1 and 2) "by abutting one of weld strips 31 to one of upper and lower materials 1, 2 and then applying heat to melt and fuse the material of weld strips 31 to the abutting material." (Ex. 1009, 8:12-20.)

232. A POSA would have known from these disclosures that these weld strips constituted thermoplastic plastic sheets. First, polyvinylchloride (PVC) is a known thermoplastic plastic sheet. (*See, e.g.,* Ex. 1046, 5 (defining PVC as "[a] thermoplastic prepared by free-radical polymerization of vinyl chloride in dispersion (emulsion), bulk, or suspension processes"); Ex. 1047, 1 ("Poly(vinyl chloride) (PVC) is one of the major thermoplastics with low production cost, as well as good insulation performance, chemical and fire resistance; it is widely used in different fields. It ranks second among the most used thermoplastics and is considered the most versatile macromolecular compound."); Ex. 1048, 1, Abstract (identifying PVC as thermoplastic).) Moreover, a POSA would have understood that connecting PVC by "applying heat to melt and fuse the material of weld strips 31 to the abutting material" (Ex. 1009, 8:12-20), would necessarily require that the weld strips be thermoplastic. (*See, e.g.*, Ex. 1035, 4 (defining "thermoplastic" as "capable of softening or fusing when heated and of hardening again when cooled").)

233. As discussed above, a POSA would have been motivated to employ Lin '773's tensioning structures as the vertical hanging sheets (first tensioning structure) and diagonal bracing hanging sheets (second and third tensioning structures) of Aoki's air mattress. (*Supra*, ¶¶188-191.) As also discussed above, a POSA would have known that it would have been advantageous to use PVC for

both Lin ’773’s weld strips and Aoki’s top sheet, bottom sheet, and side walls to achieve a secure welded connection. (*Supra*, ¶¶192-193.)

234. Accordingly, the combination of Aoki and Lin ’773 discloses or suggests first, second, and third tensioning structures that are made of thermoplastic plastic sheets. (Ex. 1036, 13 (defining “made of” as “to have been fashioned, whether by human agency or by nature, out of (certain materials); to have as its material, ***constituents, or component parts***; to consist or be composed of” (emphasis added).)

235. Accordingly, Aoki in view of Lin ’773 renders obvious claim 12 of the ’633 Patent.

13. Claim 13

a. The inflatable bed according to claim 1,

236. As discussed above, in my opinion Aoki, either individually or in view of Lin ’773, discloses or renders obvious all of the limitations of claim 1. (*Supra* §§X.A.1, X.B.1.)

b. wherein one or more of said first tensioning structure, said second tensioning structure and said third tensioning structure at least partially comprise mesh, laminated plastic sheet or a threads.

237. Lin ’773 discloses that its tensioning structures are comprised of strands that “may be made of regular cotton, polyester, nylon ***thread*** made of multiple filaments twisted together, of the type typically used in clothing seams, or

any other strand types," and that "[t]hese regular ***threads*** provide substantial tensile strength at a very low cost." (Ex. 1009, 8:64-9:1 (emphasis added).)

238. As discussed above, a POSA would have been motivated to employ Lin '773's tensioning structures (including Lin '773's strands made of threads) as vertical hanging sheets (first tensioning structure) and diagonal bracing hanging sheets (second and third tensioning structures) of Aoki's air mattress. (*Supra*, ¶¶188-191.) Accordingly, the combination of Aoki and Lin '773 disclose or suggest first, second, and third tensioning structures that at least partially comprise threads.

239. Accordingly, Aoki in view of Lin '773 renders obvious claim 13 of the '633 Patent.

14. Claim 14

a. The inflatable bed according to claim 13,

240. As discussed above, in my opinion Aoki in view of Lin '773 renders obvious all of the limitations of claim 13. (*Supra* §X.B.13.)

b. wherein two side surfaces of said mesh or said threads are at least partially coupled integrally with two opposite plastic strips, said mesh and said threads are sandwiched between the two opposite plastic strips.

241. As explained above and as shown in annotated Figure 1 below, Lin '773 discloses that its strands may be sandwiched between two weld strips (red) at the top and bottom of the strands:

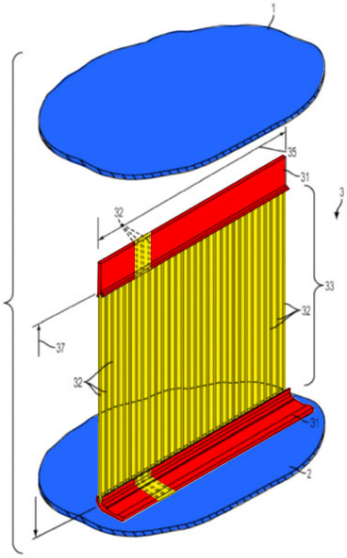

FIG. 1

(Ex. 1009, 7:17-22, 12:22-31, Fig. 1; *supra*, ¶100.) In particular, and as shown in annotated Figures 10 and 11 below, Lin '773 discloses that "two mutually opposed weld strips" (31, in red) may be disposed on either side of the strands (32, yellow) and "'trap' or capture the strands therebetween, thereby contributing to a high-strength coupling interface":

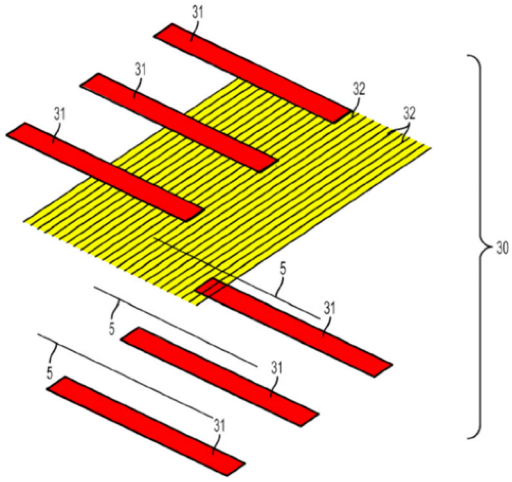

FIG. 10

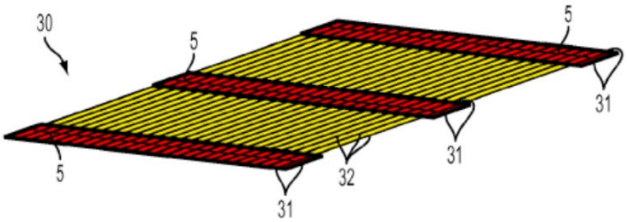

FIG. 11

(*Id.*, 12:22-28, Figs. 10, 11.) Lin '773 discloses that this "dual layer tensioning

structure 3 has improved strength and can be welded to" the top and bottom sheets (1 and 2) of the inflatable bed to prevent these sheets from urging away from each other as the bed is inflated, as shown below in annotated Figures 1 and 3 below:

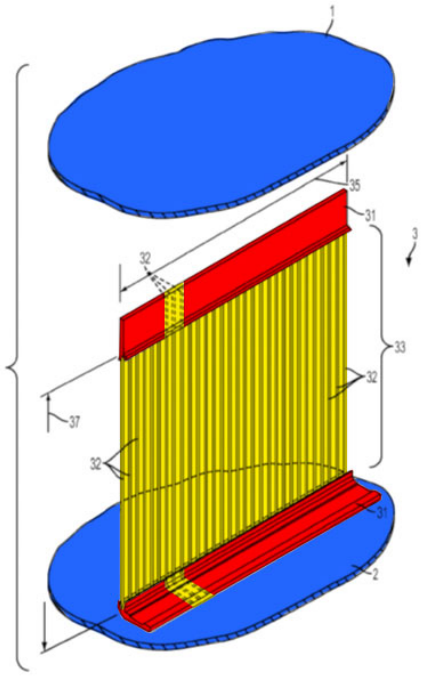

FIG. 1

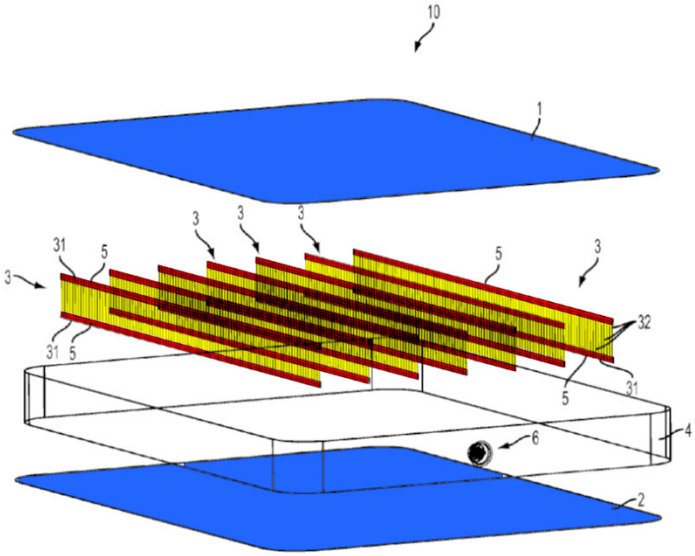

FIG. 3

(*Id.*, 12:28-31, 7:16-25, 8:47-55, Figs. 1, 3.)

242. Lin '773 further discloses that the weld strips may be made of PVC, a known plastic. (Ex. 1009, 8:12-20; Ex. 1046, 5 (defining PVC as "[a] thermoplastic prepared by free-radical polymerization of vinyl chloride in dispersion (emulsion), bulk, or suspension processes"); Ex. 1047, 1 ("Poly(vinyl chloride) (PVC) is one of the major thermoplastics with low production cost, as well as good insulation performance, chemical and fire resistance; it is widely used in different fields."); Ex. 1048, 1 at Abstract (identifying PVC as thermoplastic).)

Lin ’773 thus discloses that the threads comprising its strands (Ex. 1009, 8:64-9:1) are sandwiched between two opposite plastic strips.

243. Lin ’773 further discloses that the weld strips may be “fixedly connect[ed]” to the strands by applying “heat or electromagnetic waves,” or by “any suitable welding method.” (*Id.*, 11:11-59.) A POSA would have understood that sandwiching the strands in between the weld strips and connecting them in this way would result in the strands being coupled integrally with the two opposite weld strips, as the materials of both the strands and weld strips would be fused together.

244. As discussed above, a POSA would have been motivated to employ Lin ’773’s tensioning structures (including Lin ’773’s threads and weld strips) as the diagonal bracing hanging sheets in Aoki’s air mattress. (*Supra*, ¶¶188-191.) Moreover, the process of coupling threads with plastic strips by sandwiching the mesh or threads between the plastic strips so that they are coupled integrally, was well-known before the Priority Date. (*See, e.g.*, Ex. 1015, ¶[0051], Fig. 5A.) Indeed, I understand the Examiner came to this same conclusion in rejecting this claim during prosecution of the ’633 Patent. (Ex. 1003, 448 (citing WO 2013/0130117 (Ex. 1052), which is a published parent PCT application of Lin ’773).)

245. The combination of Aoki and Lin ’773 therefore discloses or suggests first, second, and third tensioning structures that at least partially comprise threads, with two side surfaces of the threads at least partially coupled integrally with two opposite plastic strips, and the threads are sandwiched between the two opposite plastic strips.

246. Accordingly, Aoki in view of Lin ’773 renders obvious claim 14 of the ’633 Patent.

15. Claim 16

a. The inflatable bed according to claim 1,

247. As discussed above, in my opinion Aoki, either individually or in view of Lin ’773, discloses or renders obvious all of the limitations of claim 1. (*Supra* §§X.A.1, X.B.1.)

b. wherein said first tensioning structure is coupled to said top and bottom sheets by means of high-frequency welding; said second tensioning structure is coupled to said top sheet and said side wall by means of high-frequency welding; and said third tensioning structure is coupled to said bottom sheet and said side wall by means of high-frequency welding.

248. Lin ’773 discloses that its tensioning structure may be manufactured using “a high-frequency welder.” (Ex. 1009, 11:11-38, Fig. 7.) Lin ’773 further discloses that its tensioning structure may be coupled to the upper and lower

material (top and bottom sheets of the inflatable bed) by welding. (*Id.*, 7:16-25, 8:4-29, 8:47-55, Figs. 3, 4.)

249. As discussed above, a POSA would have been motivated to employ Lin '773's tensioning structures in Aoki's air mattress. (*Supra*, ¶¶188-191.) As also discussed above, a POSA would have known that it would be advantageous to use the same material for both Lin '773's weld strips and Aoki's top sheet, bottom sheet, and side walls to achieve a secure welded connection. (*Supra*, ¶¶192-193.) Thus, a POSA would have been motivated by Lin '773's teachings of using a high-frequency welder to couple Aoki's first, second, and third tensioning structure to the top sheet, bottom sheet, and side walls, respectively, by means of high-frequency welding. A POSA would have known that high-frequency welding was a known method of welding that provided several advantages, including short weld times, simple technique, consistent performance, and relative low cost, among others. (*See, e.g.*, Ex. 1049, 3-4.) Moreover, the process of coupling tensioning structures by means of high-frequency welding was well-known and long employed in the art before the Priority Date. (*See, e.g.,* Ex. 1026, 4:26-37, 5:39-46; Ex. 1027, ¶¶[0035], [0036], [0041]; Ex. 1034, ¶[0011].) Indeed, I understand the Examiner came to this same conclusion in rejecting this claim during prosecution of the '633 Patent. (Ex. 1003, 449.)

250. Accordingly, the combination of Aoki and Lin ’773 discloses or suggests a first tensioning structure coupled to the top and bottom sheets of an inflatable bed by means of high-frequency welding, a second tensioning structure coupled to the top sheet and side wall by means of high-frequency welding, and a third tensioning structure coupled to the bottom sheet and side wall by means of high-frequency welding.

251. Accordingly, Aoki in view of Lin ’773 renders obvious claim 16 of the ’633 Patent.

16. Claim 17

a. The inflatable bed according to claim 1,

252. As discussed above, in my opinion Aoki, either individually or in view of Lin ’773, discloses or renders obvious all of the limitations of claim 1. (*Supra* §§X.A.1, X.B.1.)

b. wherein a location where said top sheet is located in the inside part of an upper edge of said second tensioning structure is lower than the location where said top sheet is located in the outside part of the upper edge of said second tensioning structure.

253. As described above, Aoki discloses this limitation. (*Supra*, ¶¶183-184.) As also discussed above, a POSA would have been motivated to employ Lin ’773’s tensioning structures as the tensioning structures in Aoki’s air mattress. (*Supra*, ¶¶188-193.) Modifying Aoki to employ Lin ’773’s tensioning structures

as the tensioning structures in Aoki's air mattress would not alter the location where the top sheet is located in the inside part of an upper edge of the second tensioning structure and the location where said top sheet is located in the outside part of the upper edge of the second tensioning structure as explained above (*supra*, ¶¶183-184.)

254. Accordingly, Aoki in view of Lin '773 renders obvious claim 17 of the '633 Patent.

C. Aoki in view of Lin '773 and Liu Renders Obvious Claims 15 and 16 of the '633 Patent

255. In my opinion, Aoki in view of Lin '773 and Liu renders obvious claims 15 and 16 of the '633 Patent.

1. Claim 15

a. The inflatable bed according to claim 13,

256. As discussed above, in my opinion Aoki in view of Lin '773 renders obvious all of the limitations of claim 13. (*Supra* §X.B.13.)

b. wherein two side surfaces of said mesh or said threads are at least partially coupled integrally with an U-shaped plastic strip, said mesh and said threads are sandwiched between the U-shaped plastic strip.

257. As discussed above, Lin '773 discloses that its tensioning structure may comprise strands made of threads sandwiched between plastic weld strips. (*Supra*, ¶¶231, 237, 241-243; Ex. 1009, 7:17-22, 8:12-20, 8:64-9:1, 12:22-31, Figs.

1, 3, 10, 11.) A POSA would have known that weld strips could "'trap' or capture the strands 32 therebetween," as disclosed by Lin '773 (*id*., 12:25-28), by two different means. While two separate weld strips could be used, it was also well known and obvious to use a single weld strip "folded over" the ends of the strands such that the weld strip was U-shaped and the strands were sandwiched between the U-shaped weld strip.

258. For example and as described above, Liu discloses use of tensioning structures "to join two pieces of material that are urged away from one another in use," including sheets comprising a multiple-layer air mattress. (*Supra*, §IX.D; Ex.1015, ¶¶[00037]-[0040], [0063].) As shown in annotated Figures 1 and 2 below, Liu discloses that its tensioning structures may comprise two plastic weld strips (red) and a panel "made of a material having fibers that form an open cell mesh construction where the cells may be shaped, cut, or otherwise formed into various geometrical shapes" (yellow):

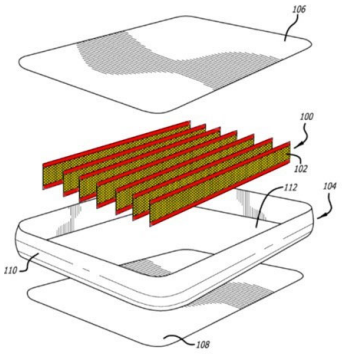

FIG. 1

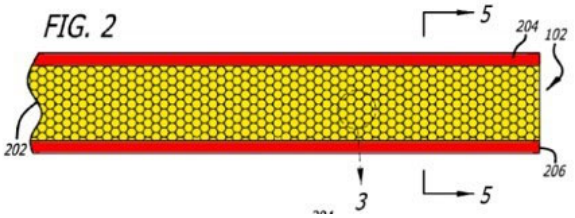

(Ex. 1015, ¶¶[0037], [0040]; Figs. 1, 2.) Liu further discloses that the fibers of the mesh construction "may be constructed by knotting or weaving together strands of materials such as twine, wire, string, or ***threads***." (Ex. 1015, ¶[0046] (emphasis added).) As shown below in annotated Figure 5B, Liu further discloses that "a single weld strip 502" (red) "may be used and folded about the lateral ends of the panel 202" (yellow) "such that one end of the weld strip is affixed to a bottom surface of the panel 202 and the opposite end of the strip is affixed to a top surface of the panel 202":

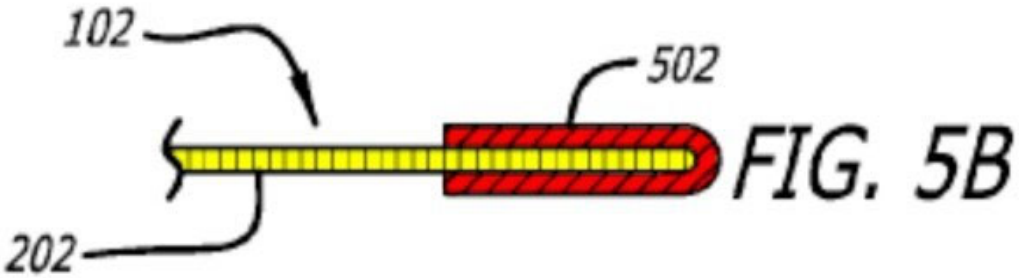

(Ex. 1015, ¶[0052], Fig. 5B.)

259. Liu further discloses that its weld strips may be affixed to the mesh panel 202 using suitable coupling techniques, such as radio-frequency (RF) welding, hot-air coupling (e.g., melting or welding), adhering (e.g., gluing) or other means known in the art." (*Id.*, ¶[0051].) A POSA would have understood that folding the weld strip about the lateral ends of the mesh panel and then coupling it by radio-frequency welding or melting would result in the mesh being coupled

integrally with the U-shaped weld strip, as the materials of both the panel and weld strip would be fused or integrated together.

260. Liu teaches that such tensioning structures could be used to join the top and bottom sheets of a multiple-layer mattress, or "in any application where a lightweight, packable structure is needed to join two pieces of material that are urged away from one another in use," including "in combination with one another as required or desired for a particular design." (Ex. 1015, ¶¶[0035]-[0040], [0063].) Liu further discloses that its tensioning structures "prevent over-expansion or 'ballooning' of the mattress" and thereby ensure that the air mattress does not become deformed (*id.*, ¶¶[0009]-[0010], [0040]-[0041], [0054])—the same problem in the art to which Aoki and Lin '773 are addressed (Ex. 1005, 1-2, 4-5; Ex. 1009, 1:38-52, 7:16-25, 8:47-55). Liu further teaches that its tensioning structures provide various advantages over known tensioning structures, including facilitating the free flow of air from one portion of the air chamber to the next while being lightweight, "simple in structure, easy to manufacture, durable, and low in production cost." (Ex. 1015, ¶¶ [0054], [0061].)

261. As discussed above, a POSA would have been motivated to employ Lin '773's tensioning structures (including Lin '773's threads and weld strips) as the tensioning structures in Aoki's air mattress. (*Supra*, ¶¶188-193.) A POSA implementing Lin '773's tensioning structures in Aoki's air mattress would have

been motivated to try either of the two principal ways to sandwich threads between weld strips—that is, either using two separate weld strips (as taught by Lin ’773) or a single weld strip folded over the ends of the threads (as taught by Liu). A POSA would have known that these two options constituted a finite number of identified, predictable solutions for sandwiching threads in a tensioning structure, and would have a reasonable expectation of success in trying either option. A POSA would have known that both options would yield a tensioning structure with threads effectively sandwiched between plastic. A POSA thus would have known that either solution would be obvious to try. Indeed, the process of coupling mesh or threads with a plastic strip by “sandwiching” the mesh or threads between a U-shaped plastic strip so that they are coupled integrally, was well known before the Priority Date. I understand the Examiner came to this same conclusion in rejecting this claim during prosecution of the ’633 Patent. (Ex. 1003, 448.)

262. Accordingly, the combination of Aoki, Lin ’773, and Liu disclose or suggest first, second, and third tensioning structures that at least partially comprise threads, with two side surfaces of the threads at least partially coupled integrally with a U-shaped plastic strip, and the threads are sandwiched between the U-shaped plastic strip.

263. Accordingly, Aoki in view of Lin ’773 and Liu renders obvious claim 15 of the ’633 Patent.

2. Claim 16

a. The inflatable bed according to claim 1,

264. As discussed above, in my opinion Aoki, either individually or in view of Lin '773, discloses or renders obvious all of the limitations of claim 1. (*Supra* §§X.A.1, X.B.1.)

b. wherein said first tensioning structure is coupled to said top and bottom sheets by means of high-frequency welding; said second tensioning structure is coupled to said top sheet and said side wall by means of high-frequency welding; and said third tensioning structure is coupled to said bottom sheet and said side wall by means of high-frequency welding.

265. As described above, Aoki in view of Lin '773 renders obvious claim 16 of the '633 Patent. (*Supra*, ¶¶247-251.) However, to the extent it would not have been obvious to couple Aoki's tensioning structures by means of high-frequency welding based on the teachings of Lin '773 as described above, it would have been obvious to do so in view of the teachings of Liu.

266. Liu discloses that its tensioning structures may be coupled to sheets of an inflatable mattress (such as the top and bottom sheets) by "RF welding, hot-air coupling, adhering, or other means known in the art." (Ex. 1015, ¶[0054].) A POSA would have understood that RF (radio frequency) welding constitutes high-frequency welding. (*See, e.g.*, Ex. 1046, 4 ("Radio frequency (RF) welding, also called high frequency welding, HF welding or dielectric welding, uses high

frequency (normally 27.12 MHz) electro-magnetic energy to generate heat in materials by virtue of their electrical properties….”); Ex. 1049, 17 (“Dielectric welding is also known as high frequency (HF) welding and radio frequency (RF) heating or welding.”); Ex. 1050, 3 (“One other method worth a mention is radio frequency welding (RF). Materials are fused together using high frequency energy to cause molecules to oscillate.”).)

267. Thus, to the extent a POSA would not have understood Lin ’773 to teach coupling tensioning structures to the top sheet, bottom sheet, and side walls by means of high-frequency welding, a POSA would have been motivated by Liu’s teachings to employ high-frequency welding to couple these materials. As discussed above, Liu is directed to the same problems as Aoki (preventing deforming of large-height inflatable beds), and, like Lin ’773, discloses advantageous tensioning structures comprising two weld strips to achieve this objective. (*Supra*, ¶260; Ex.1015, ¶¶[0009]-[0010], [00037]-[0041], [0054], [0063].) A POSA thus would have been motivated to look to Liu’s teachings regarding advantageous attachment methods for coupling tensioning structures comprising weld strips (as disclosed by Lin ’773) to the outer surfaces of an inflatable bed. As discussed above, a POSA would have known that high-frequency welding was a known method of welding that provided several advantages, and the process of coupling tensioning structures by means of high-

frequency welding was well-known and long employed in the art before the Priority Date. (*Supra,* ¶249; *see, e.g.,* Ex. 1026, 4:26-37, 5:39-46; Ex. 1027, ¶¶[0035], [0036], [0041]; Ex. 1034, ¶[0011]; Ex. 1049, 3-4.) Indeed, I understand the Examiner came to this same conclusion in rejecting this claim during prosecution of the '633 Patent. (Ex. 1003, 449.)

268. Accordingly, the combination of Aoki, Lin '773, and Liu disclose or suggest a first tensioning structure coupled to the top and bottom sheets of an inflatable bed by means of high-frequency welding, a second tensioning structure coupled to the top sheet and side wall by means of high-frequency welding, and a third tensioning structure coupled to the bottom sheet and side wall by means of high-frequency welding.

269. Accordingly, Aoki in view of Lin '773 and Liu renders obvious claim 16 of the '633 Patent.

D. Aoki in view of Metzger Renders Obvious Claim 12 of the '633 Patent

270. In my opinion, Aoki in view of Metzger renders obvious claim 12 of the '633 Patent.

1. Claim 12

a. The inflatable bed according to claim 1,

271. As discussed above, in my opinion Aoki discloses all of the limitations of claim 1. (*Supra* §X.A.1.)

b. wherein said first tensioning structure, said second tensioning structure and said third tensioning structure are all made of thermoplastic plastic sheet.

272. As explained above, Aoki in view of Lin ’773 renders obvious claim 12. (*Supra*, ¶¶230-235.) To the extent the Board determines that claim 12’s recitation that the first, second, and third tensioning structures are all “made of thermoplastic plastic sheet” means that the entirety of all three tensioning structures must be thermoplastic, claim 12 is nonetheless obvious in view of Metzger. (Ex. 1010, 4:41-51, 5:12-59, 6:15-30, Fig. 6.)

273. As described above and shown in annotated Figures 5 and 6 below, Metzger discloses a first tensioning structure (spaced coils (18) (yellow) that “extend continuously within the air chamber from and between the first panel 7 and the second panel 8 of the air mattress”), and second and third tensioning structures (side support beams (25), red and orange) having “a first edge 26 adapted to be affixed to a side panel of the mattress …, and a spaced second edge adapted to be affixed to either of the first panel 7 or the second panel 8,” which are provided “for each of the side panels of the air mattress”):

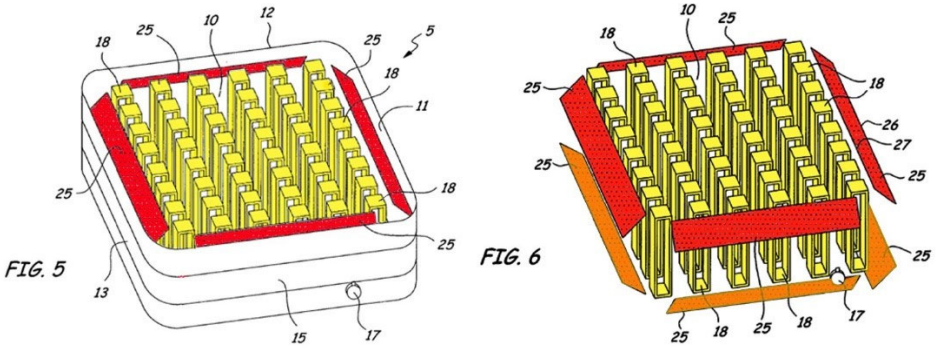

(*Id.*, 4:41-51, 5:12-59, Fig. 6; *supra*, §IX.G.)

274. Metzger further discloses that each of the spaced coils and side support beams "may be formed of any flexible barrier material as known to those skilled in the art, including but not limited to, the use of polyvinylchloride, polyethylene, and the like." (*Id.*, 6:25-30.) Metzger discloses that the spaced coils and side support beams may be attached or affixed to the respective panels (top sheet, bottom sheet, and side walls) "by using any known heat welding, fusing, or bonding technique …, all in conventional fashion so long as a durable edge connection is formed therebetween." (*Id.*, 6:15-22.)

275. Accordingly, Metzger teaches that the spaced coils and side support beams (first, second, and third tensioning structures) may be made of thermoplastic plastic sheet. First, polyvinylchloride (PVC) is a known thermoplastic plastic sheet. (*See, e.g.,* Ex. 1046, 5 (defining PVC as "[a] thermoplastic prepared by free-radical polymerization of vinyl chloride in dispersion (emulsion), bulk, or suspension processes"); Ex. 1047, 1 ("Poly(vinyl chloride) (PVC) is one of the major thermoplastics with low production cost, as well as good insulation performance, chemical and fire resistance; it is widely used in different fields. It ranks second among the most used thermoplastics and is considered the most versatile macromolecular compound."); Ex. 1048, 1, Abstract (identifying PVC as thermoplastic).) Moreover, a POSA would have understood that connecting plastic

by heat welding or fusing would necessarily require that the tensioning structures would be made of thermoplastic plastic sheet. (*See, e.g.*, Ex. 1035, 4 (defining "thermoplastic" as "capable of softening or fusing when heated and of hardening again when cooled").)

276. As discussed above, a POSA considering materials for Aoki's tensioning structures in 2016 would have naturally looked to more recent teachings and knowledge in the art regarding suitable and advantageous materials and tensioning structures. (*Supra*, ¶¶188.) While a POSA would have been motivated to look to Lin '773's teachings of advantageous tensioning structures comprising two PVC weld strips at each end, a POSA would have also known from Metzger's teachings that using tensioning structures comprised entirely of thermoplastic would also accomplish the objectives of resisting deformation of an inflatable bed as it is inflated. (Ex. 1010, 1:29-44, 5:27-59.) Metzger discloses almost the same structures as Aoki (large-height inflatable mattress incorporating tensioning structures between the top and bottom sheets, top and side sheets, and bottom and side sheets), and both Aoki and Metzger are directed to solving the same problems—enhancing stability and preventing deformity in large-height air mattresses. (*Compare* Ex. 1005, 1-2, *with* Ex. 1010, 1:60-2:51.) A POSA choosing materials for Aoki's tensioning structures would thus have been motivated to look to Metzger's teachings of thermoplastic tensioning structures.

277. A POSA would have further known that it would have been advantageous to use PVC for both Aoki's diagonal bracing hanging sheets and Aoki's top sheet, bottom sheet, and side walls to achieve a secure welded connection. A POSA would have known that use of PVC for the outside surfaces and tensioning structures of Aoki would have been a simple substitution of more modern materials for Aoki's hanging sheets. (*See, e.g.*, Ex. 1010, 1:29-44, 6:15-30 (disclosing known use of PVC for the outside surfaces and tensioning structures of an air mattress, and attachment of such surfaces and structures "by using any known heat welding, fusing, or bonding technique").) A POSA would thus have known that using a tensioning structure comprised entirely of PVC (as disclosed in Metzger), or a tensioning structure comprised of PVC strips and threads (as disclosed in Lin '773), would both have been obvious to try, and would have had a reasonable expectation of success in using either material as tensioning structures in the inflatable bed disclosed by Aoki.

278. The combination of Aoki and Metzger therefore discloses or suggests first, second, and third tensioning structures that are made of thermoplastic plastic sheets. (Ex. 1036, 13 (defining "made of" as "to have been fashioned, whether by human agency or by nature, out of (certain materials); to have as its material, constituents, or component parts; to consist or be composed of" (emphasis added).)

279. Accordingly, in my opinion, Aoki in view of Metzger renders obvious claim 12 of the ’633 Patent.

E. Aoki in view of Lin ’773 and Liu ’866 Renders Obvious Claims 19 and 20 of the ’633 Patent

280. In my opinion, Aoki in view of Liu ’866 renders obvious claims 19 and 20 of the ’633 Patent.

1. Claim 19

a. The inflatable bed according to claim 1,

281. As discussed above, in my opinion Aoki, either individually or in view of Lin ’773, discloses or renders obvious all of the limitations of claim 1. (*Supra* §§X.A.1, X.B.1.)

b. wherein said inflatable bed further comprises a built-in air pump, which is disposed on said side wall and is located between a lower edge of said second tensioning structure and an upper edge of said third tensioning structure for inflating said air chamber.

282. As shown in annotated Figure 3 below, Liu ’866 discloses an air bed that includes: (i) a periphery sheet 1 (green); (ii) a top sheet 2 (blue); (iii) a bottom sheet 3 (blue); and (iv) a middle sheet 4 (light blue):

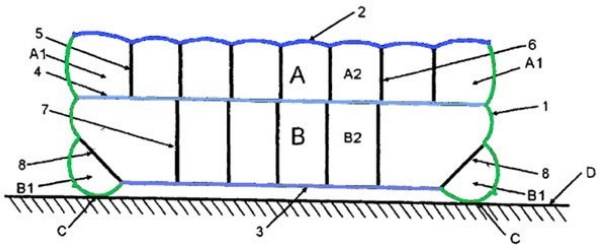

Fig.3

(Ex. 1011, 1:62-64, 2:56-58, Figs. 1-3.)

283. Liu ’866 further discloses that the airbed includes (i) a first set of extending strips 6 (yellow); (ii) a loop of an outer extending strip 5 (red); (iii) a second set of extending strips 7 (yellow); and (iv) an oblique extending strip 8 (orange):

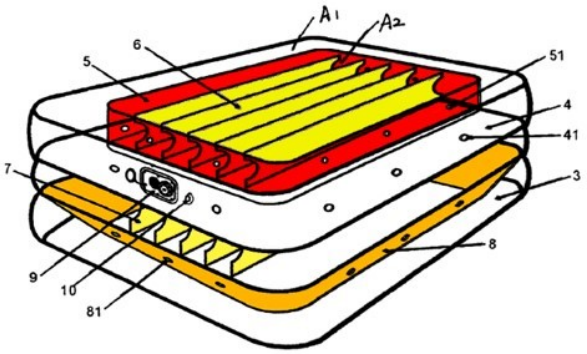

Fig.2

(*Id*. at 1:65-2:11, 2:66-3:18, Fig. 2.) Liu ’866 discloses that the outer extending strip 5 and first set of extending strips 6 are “fuse welded to top sheet 2 and middle sheet 4.” (*Id.*, 3:2-7.) The second set of extending strips 7 is “welded to the middle sheet 4 and the bottom sheet 3.” (*Id*., 3:12-14.) The oblique extending strip 8 is “provided around [the] second set of extending strips” 7 and “one side edge of [the] oblique extending strip 8 is welded to the periphery sheet 1, and the other side edge is welded to [the] bottom sheet 3.” (*Id*., 3:15-18.)

284. As shown in annotated Figure 8 below, Liu ’866 also discloses an alternative embodiment in which “a plurality of oblique extending strips 8 [orange], for example, four oblique extending strips, two ends of which are not

connected with each other, are provided around the periphery of the second set of extending strips 7 [yellow] in the lower air-chamber B":

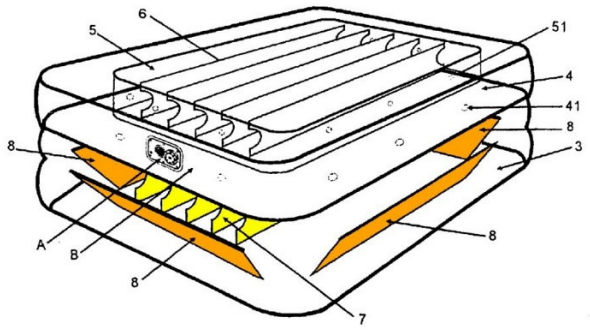

Fig.8

(*Id*., 3:45-4:5; Fig. 8.) These oblique extending strips 8 (orange) are "welded to periphery sheet 1 around the air bed and bottom sheet 3, respectively." (*Id.*)

285. In addition, Liu '866 discloses "a built-in electrical air pump or other air pump" for inflating the air chambers of the air bed. (Ex. 1011, 3:38-41.) As shown below in annotated Figure 8, Liu '866 discloses that the air pump (purple) is disposed on a side wall, above an upper edge of the plurality of oblique extending strips (orange):

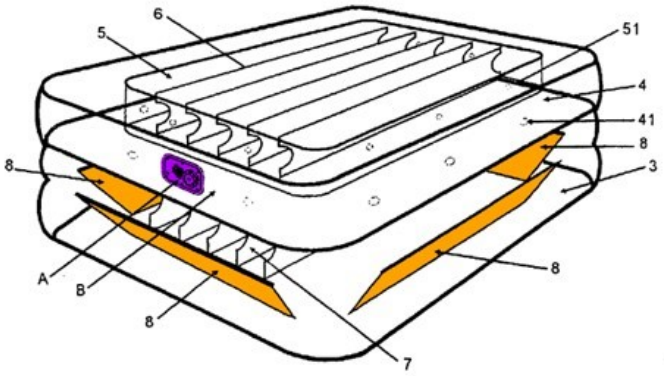

Fig.8

(*Id.*, Fig. 8; *see also* Fig. 2.)

286. It would have been obvious to combine the air mattress disclosed and suggested by Aoki and Lin '773 with Liu '866's teachings of disposing a built-in air pump on the side wall. Because Aoki is silent as to ways of inflating its air mattress, a POSA would have been motivated to look to the prior art to provide that teaching, knowing that Aoki's air mattress must be inflated in some way. A POSA would have been motivated to look to Liu '866, as it addresses the same problems as Aoki—stability limitations, the potential for users to fall off, and aesthetic concerns in large-height air mattresses. (*Compare* Ex. 1005, 1-2, 5, *with* Ex. 1011, 1:44-55, 2:18-31.) Moreover, providing a built-in air pump in an inflatable bed was well-known in the art before the priority date. (*Supra*, ¶36.) A POSA would have known that a built-in air pump provided many advantages over earlier means of inflation, such as manual inflation or external pumps. This included (a) increased time- and labor-efficiency, as it eliminated the need to provide a pump separate from the air mattress (Ex. 1016, 1:25-28; Ex. 1017, 1:30-40; Ex. 1018, 1:25-33, Fig. 1; Ex. 1019, 1:19; Ex. 1020, Fig. 6, 4:1-15); (b) increased spatial efficiency (Ex. 1019, 4:50-59; Ex. 1021, 2:40-52); (c) increased durability (Ex. 1022, Fig. 1, 1:9-14, 2:123-132, 3:18-22; Ex. 1023, 1:29-31); (d) improved costs and marketability (Ex. 1017, 1:34-38; Ex. 1018, 1:24-25; Ex. 1020, Fig. 6, 4:1-15). Indeed, I understand that the Examiner originally rejected this

claim during prosecution, taking Official Notice that "built-in air pumps were well known within the art," and finding that it would have been obvious to a POSA "to incorporate a built-in air pump … for the purpose of increasing convenience." (Ex. 1003, 449.)

287. Moreover, as evidenced by the references cited above, implementing a built-in pump with Aoki would have been well within a POSA's technical grasp as of the Priority Date. Indeed, I understand that Patent Owner previously affirmed that implementing pump components into a housing built into an air mattress "would have been well within a POSA's technical grasp" as early as June 2001. (Ex. 1045, ¶211; Ex. 1044, 1, 6, 50.)

288. Although Liu '866 does not disclose oblique extending strips coupled to the top sheet and side walls, it would have been obvious to place the built-in pump between the second tensioning structure (upper diagonal bracing hanging sheets) and third tensioning structure (lower diagonal bracing hanging sheets) of Aoki. As an initial matter, the specific location of the pump on the side wall reflects a design choice from among a finite number of options. It was well-known in the art that placing a built-in air pump in the middle portion of a side wall, in between two tensioning structures, would provide several advantages, including allowing more space to install the pump, ensuring that the pump was not immediately adjacent to the tensioning structures, and minimizing any interference

between the pump and the tensioning structures. Indeed, such design placement was common as of the Priority Date. (*See, e.g.*, Ex. 1008, 12, 14, 46, 48, 52; Ex. 1007, Fig. 2.) Thus, a POSA would have a reasonable expectation of success in placing the pump in the middle portion of the mattress, between two tensioning structures.

289. A POSA further would have been motivated by Liu '866's teaching to place the pump above the bottom oblique extending strips to apply that same concept to Aoki. In particular, a POSA would have known that just as placing the pump above diagonal tensioning structures coupled to the side walls and bottom sheet would be beneficial, it would similarly be beneficial to also place the pump below diagonal tensioning structures coupled to the side walls and top sheet. A POSA would have known that placing the pump between upper and lower diagonal bracing hanging sheets would allow more space to install the pump, ensure that the pump was not immediately adjacent to the tensioning structures, and minimize any interference between the pump and the tensioning structures. Indeed, as described above and shown again in the annotated Figure below, Aoki discloses at least two tensioning structures connecting the top sheet and side walls, and at least two tensioning structures connecting the bottom sheet and side walls, at each side of the inflatable bed, with a gap in between the upper and lower tensioning structures:

FIG. 2

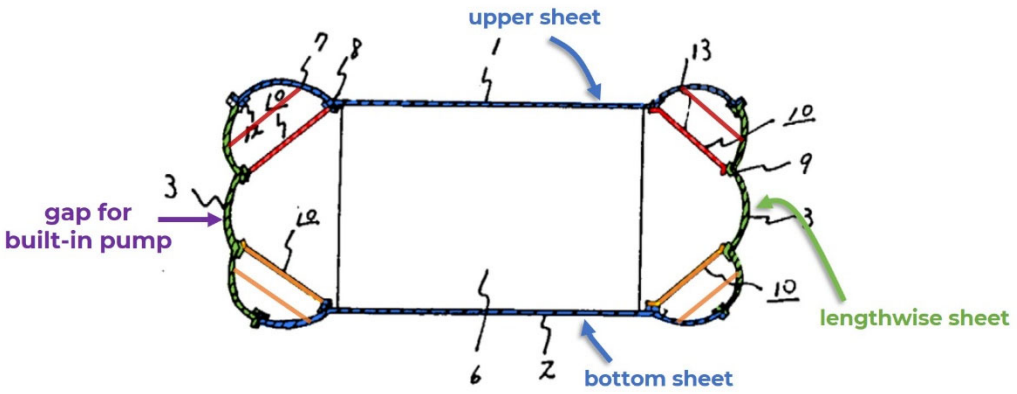

(Ex. 1005, 4, Figs. 2, 4.) This would naturally suggest to a POSA to place a built-in pump in the gap between the upper and lower tensioning structures, to achieve the benefits of allowing more space to install the pump, ensuring that the pump was not immediately adjacent to the tensioning structures, and minimizing any interference between the pump and the tensioning structures.

290. The combination of Aoki, Lin ’773, and Liu ’866 therefore discloses or suggests an inflatable bed comprising a built-in air pump disposed on the side wall and located between a lower edge of a second tensioning structure and an upper edge of a third tensioning structure for inflating said air chamber.

291. Accordingly, in my opinion, Aoki in view of Lin ’773 and Liu ’866 renders obvious claim 19 of the ’633 Patent.

2. Claim 20

a. The inflatable bed according to claim 1,

292. As discussed above, in my opinion Aoki, either individually or in view of Lin '773, discloses or renders obvious all of the limitations of claim 1. (*Supra* §§X.A.1, X.B.1.)

b. wherein said inflatable bed further comprises an air valve, which is disposed on said side wall for the inflation and deflation of said inflatable bed.

293. Liu '866 discloses that "the air bed can be filled up with air once for its whole air-chambers from air-valve 10." (Ex. 1011, 3:38-41.) As shown in annotated Figure 1 below, Liu '866 discloses that the air valve 10 (purple) is disposed on the side wall of the inflatable bed:

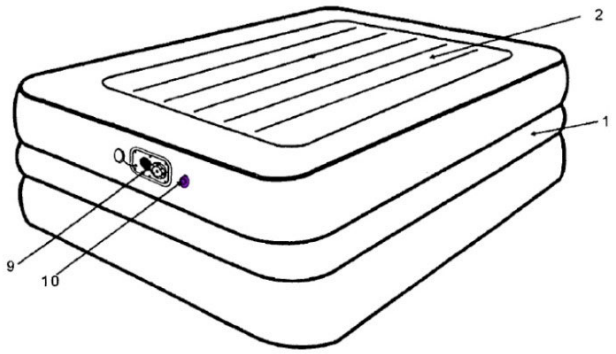

Fig.1

(*Id.*, Fig. 1.)

294. A POSA would have known that Liu '866's air valve would be used for not only inflation but also deflation of the inflatable bed. First, it was well known in the art that air valves were commonly used for both inflation and

deflation. (*See, e.g.*, Ex. 1036, 5 (defining "air valve" as "for the use, reception, passage, of air"); Ex. 1035, 7 (defining "valve" as "any of numerous mechanical devices by which the flow of liquid, gas, or loose material in bulk may be started, stopped, or regulated by a movable part that opens, shuts, or partially obstructs one or more ports or passageways").) Second, Liu '866 describes no other conduit for air to flow out of the air mattress, and so a POSA would understand that the air valve would be used for both inflation and deflation.

295. It would have been obvious to combine the air mattress disclosed and suggested by Aoki and Lin '773 with Liu '866's teachings of disposing an air valve on the side wall for inflation and deflation of the inflatable mattress. Because Aoki is silent as to ways of inflating or deflating its air mattress, a POSA would have been motivated to look to the prior art to provide that teaching, knowing that Aoki's air mattress must be inflated and deflated in some way. A POSA would have been motivated to look to Liu '866, as it addresses the same problems as Aoki—stability limitations, the potential for users to fall off, and aesthetic concerns in large-height air mattresses. (*Compare* Ex. 1005, 1-2, 5, *with* Ex. 1011, 1:44-55, 2:18-31.) Moreover, providing an air valve on the side wall for inflation and deflation of an inflatable bed was well-known in the art before the priority date. (*Supra*, ¶36.) An air valve has been a rudimentary feature of inflatable products for decades, and implementing an air valve with Aoki would

have been well within a POSA's technical grasp. Indeed, I understand that the Examiner originally rejected this claim during prosecution, taking Official Notice that "air valves, such as the one required in [issued claim 20], are well known within the art." (Ex. 1003, 450.)

296. The combination of Aoki, Lin '773, and Liu '866 therefore discloses or suggests an inflatable bed comprising an air valve disposed on the side wall for the inflation and deflation of the inflatable bed.

297. Accordingly, in my opinion, Aoki in view of Lin '773 and Liu '866 renders obvious claim 20 of the '633 Patent.

F. Lin in view of the Catalog and Metzger Renders Obvious Claims 1-13, 17, 19, and 20 of the '633 Patent

298. In my opinion, Lin in view of the Catalog and Metzger renders obvious claims 1-13, 17, 19, and 20 of the '633 Patent.

1. Claim 1

a. An inflatable bed, comprising:

299. I understand that "[a]n inflatable bed, comprising" is the preamble of claim 1. I have been asked to assume that the preamble is limiting. In my opinion, Lin discloses this feature. (Ex. 1007, ¶¶[0002], [0022], Figs. 1, 2.) For example, Lin discloses that it is directed to an "airbed" and other inflatable products. (*Id.*, ¶[0022].) A POSA would thus understand Lin to disclose an inflatable bed.

b. a top sheet and a bottom sheet disposed vertically at an interval;

300. Lin discloses this limitation. (*Id.*, ¶¶[0021], [0023], Figs. 2-4.) As shown in annotated Figure 2 below, Lin discloses an airbed that comprises a top sheet ("upper piece 1") and bottom sheet ("lower piece 2") (blue) disposed vertically at an interval:

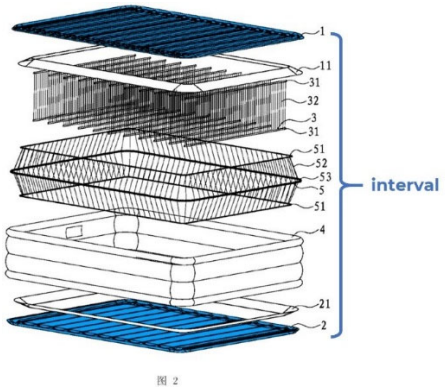

(*Id.*, Fig. 2.) Indeed, this is consistent with Patent Owner's identification of these components of Lin as the top sheet and bottom sheet recited in claim 1 of the '633 Patent, as shown in Patent Owner's annotated version of Lin's Figure 2 that Patent Owner submitted during prosecution of the '633 Patent:

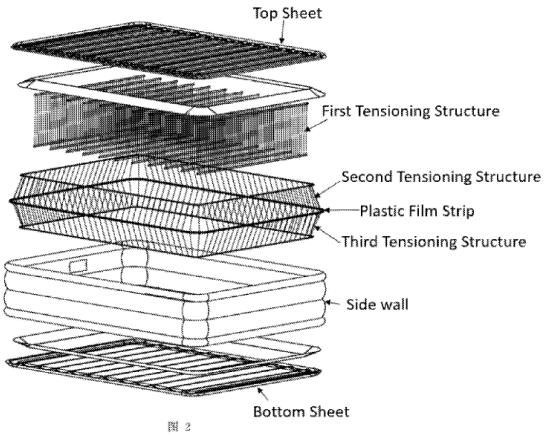

Annotated Figure 2 of Lin

(Ex. 1003, 485.)

c. at least one side wall, an upper edge of said side wall being coupled to an outer edge of said top sheet, a lower edge of said side wall being coupled to an outer edge of said bottom sheet, an air chamber formed between said top sheet, said bottom sheet and said side wall; and

301. Lin discloses this limitation. (Ex. 1007, ¶[0021], Figs. 2-4.) As shown in annotated Figure 2 below, Lin discloses that the airbed comprises a side wall ("wrapping piece 4") (green), with an upper edge of the side wall being coupled to an outer edge of the top sheet ("upper piece 1"), a lower edge of the side wall being coupled to an outer edge of the bottom sheet ("lower piece 2"), and an air chamber formed between the top sheet, bottom sheet and side wall:

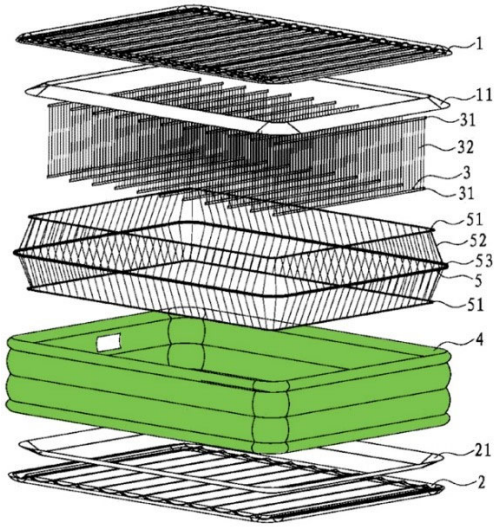

图 2

(*Id.*, Fig. 2, ¶[0021] ("[U]pper and lower sides of the wrapping piece 4 are respectively connected with a periphery of the upper piece 1 and a periphery of the lower piece 2, thereby forming an inflatable product having an air chamber ….").)

Indeed, this is consistent with Patent Owner's identification of Lin's wrapping piece 4 as the side wall recited in claim 1 of the '633 Patent, as shown in Patent Owner's annotated version of Lin's Figure 2 that Patent Owner submitted during prosecution of the '633 Patent:

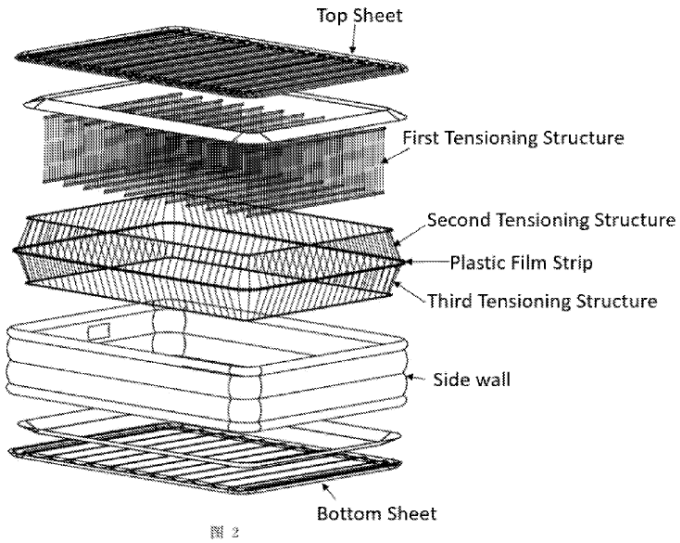

Annotated Figure 2 of Lin

(Ex. 1003, 485.)

d. at least one first tensioning structure disposed in said air chamber, an upper end and a lower end of said first tensioning structure being respectively coupled to said top sheet and said bottom sheet; and

302. Lin discloses this limitation. (Ex. 1007, ¶¶[0021]-[0023], Figs. 2-4.) As shown in annotated Figure 2 below, Lin discloses "a plurality of drawbelts 3" (yellow) disposed in the air chamber, and that an upper end and lower end of each of the drawbelts is respectively welded to the top sheet ("upper piece 1") and the bottom sheet ("lower piece 2"):

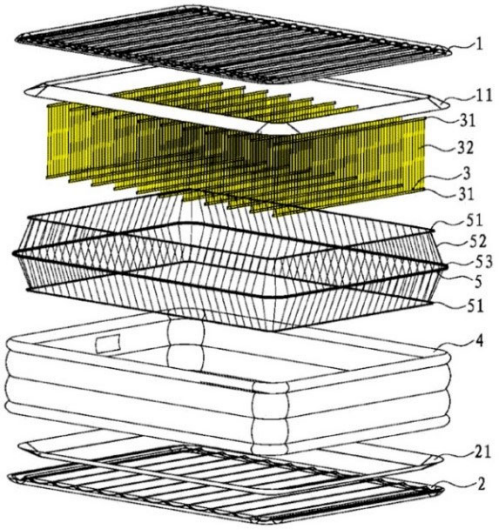

图 2

(*Id.*, Fig. 2, ¶[0021] ("Two ends of each of the drawbelts 3 are respectively connected to a lower surface of the upper piece 1 and an upper surface of the lower piece 2 …."), ¶[0023], Figs. 2-4.) Indeed, this is consistent with Patent Owner's identification of Lin's drawbelts 3 as the first tensioning structure recited in claim 1 of the '633 Patent, as shown in Patent Owner's annotated version of Lin's Figure 2 that Patent Owner submitted during prosecution of the '633 Patent:

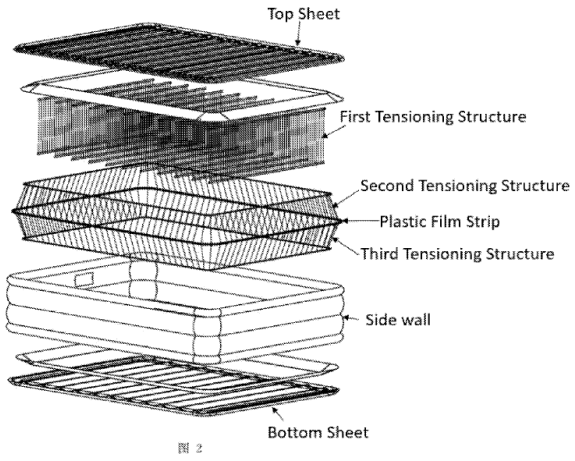

Annotated Figure 2 of Lin

(Ex. 1003, 485.)

e. at least one support structure disposed in said air chamber, said support structure being disposed in a longitudinal direction of at least one of said side walls, at least two outside edges of said support structure being respectively coupled to the side wall adjacent, at least one inside edge of said support structure being coupled to the top sheet or bottom sheet adjacent;

303. Lin discloses this limitation. (Ex. 1007, ¶¶[0021]-[0023], [0025], Fig. 2.) As shown in the annotated Figure 2 below, Lin discloses that the airbed comprises "side wrapping belt 5" (red and orange, middle), "a ring-shaped upper suction piece 11" (red, top), and "a ring-shaped lower suction piece 21" (orange, bottom):

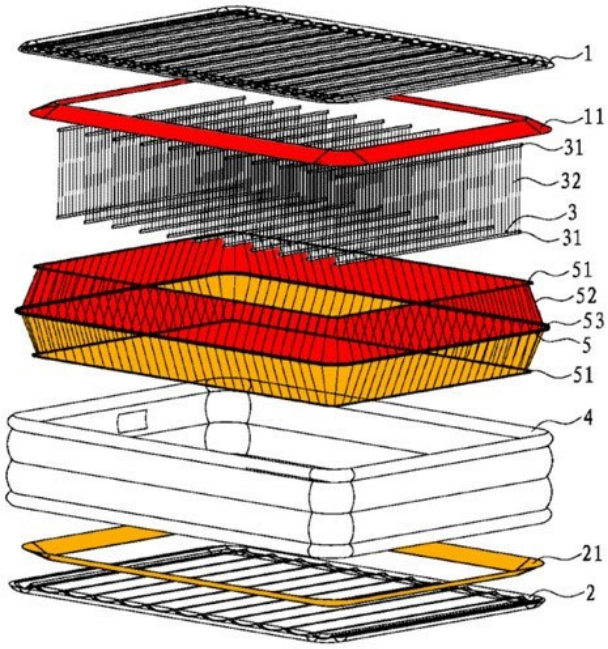

图 2

(*Id.*, ¶¶[0021], [0025], Fig. 2).

304. Lin discloses that the side wrapping belt (5) is disposed within the air chamber in a longitudinal direction, and includes an upper structure and a lower structure. (*Id.*, ¶¶[0021]-[0023]; Fig. 2.) Indeed, this is consistent with Patent Owner's identification of Lin's side wrapping belt 5 as the second and third tensioning structures recited in claim 1 of the '633 Patent, as shown in Patent Owner's annotated version of Lin's Figure 2 that Patent Owner submitted during prosecution of the '633 Patent:

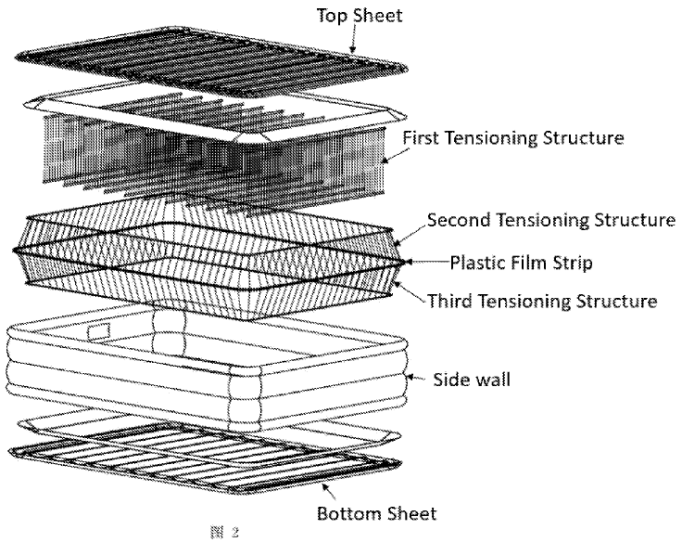

Annotated Figure 2 of Lin

(Ex. 1003, 485.) I will adopt Patent Owner's "second tensioning structure" and "third tensioning structure" references for this limitation.

305. As shown in the annotated Figure below, Lin discloses that the second tensioning structure (in red) includes an inside edge that is "connected to the lower surface of the upper piece 1 [i.e., the top sheet] near the periphery" via plastic strips 51, and that the third tensioning structure (in orange) includes an inside edge

that is connected to "the upper surface of the lower piece 2 [i.e., the bottom sheet] near the periphery" via plastic strips 51:

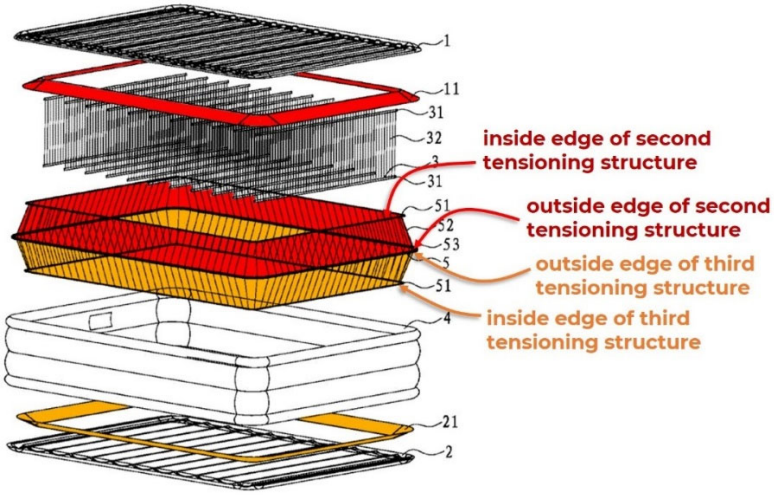

图 2

(Ex. 1007, ¶¶[0021], [0023], Fig. 2.) Lin's second tensioning structure (in red) also includes an outside edge (a first outside edge) coupled to the wrapping piece 4 via plastic strip 53, and Lin's third tensioning structure (in orange) also includes an outside edge (and second outside edge) coupled to the wrapping piece 4 via plastic strip 53. (*Id.*)[4] I note that this is how Patent Owner described Lin's disclosure

[4] The upper suction piece portion of the second tensioning structure and the lower suction piece portion of the third tensioning structure are addressed below in connection with the next limitation of claim 1, but each of the suction pieces also has an outside edge coupled to the side wall and an inside edge coupled to the top and bottom sheets, respectively. (*Infra*, ¶¶311-318.)

during prosecution of the ’633 Patent: “A second tensioning structure 52 wherein the second tensioning structure 52 is coupled to the side wall 4 and the top sheet 1. A third tensioning structure wherein the third tensioning structure is coupled to the side wall 4 and the bottom sheet 2.” (Ex. 1003, 484.)

306. Moreover, a POSA would have known that coupling the upper structure and lower structure to the side walls of the inflatable bed through a common plastic strip was a design choice, and the two structures could instead be coupled to the side walls using separate plastic strips. As explained below, a POSA would have known that using separate plastic strips would allow the outside edge of each structure to be placed at a different location along the side walls, thereby advantageously (1) creating an additional connection point to the side wall and thus more uniformly distributing tensioning resistance along the side wall; and (2) adding additional “layers” to a large-height inflatable bed.

307. As explained above, it was well known in the art as of the Priority Date that one or more diagonal tensioning structures could be provided between the top sheet and side wall and between the bottom sheet and side wall. (*Supra*, §VI.C.) As also explained above, it was well known in the art as of the Priority Date that it would be advantageous to be able to adjust the locations at which the outer edges of tensioning structures were coupled to the side wall of an inflatable bed so as to create more or fewer “layers” to the inflatable bed. (*Id.*; Ex. 1013,

¶¶[0067], [0073] (disclosing use of multiple diagonal "peripheral strips" and that "when more than one peripheral strip is used to respectively surround the side wall and connected to positions of different height, then the air mattress having the side wall with more-than-three-layered structure can easily be formed"); Ex. 1010, 5:41-6:14, 6:44-47, 8:59-60, 10:3-8 (disclosing use of multiple "side support beams" to limit the outward expansion of the side panels and forming "separate side panel segments of any desired width"). It was further well known that it would be advantageous to position such diagonal tensioning structures such that there was a gap in between the tensioning structures. (*See, e.g.*, Ex. 1005, 4, Figs. 2, 4; Ex. 1013, ¶¶[0068]-[0069], Fig. 9; Ex. 1014, ¶¶[0027]-[0028], Fig. 3; Ex. 1010, 5:27-6:14, Figs. 5, 6.)

308. For example, Metzger expressly contemplates two separate alternatives for coupling diagonal tensioning structures ("side support beams") to the side walls of an inflatable bed: (1) spacing the edges apart from each other on the side wall; or (2) making them co-linear such that they "extend along a common edge connection … on the side wall." (Ex. 1010, 5:60-64.) Metzger discloses that with the first alternative, "the side support beam edges act to define three separate side panel segments … of approximate equal width extending across the at least one side panel of the mattress measured from the first panel toward the second panel thereof for more uniformly distributing the mattress loading across the face

of the side panel(s)." (*Id.*, 5:64-6:5.) Metzger discloses that with the second alternative, the side support beam edges "will define two separate side panel segments, which side panel segments may be of approximate equal width if so desired, extending across the at least one side panel." (*Id.*, 6:5-10.) However, Metzger also discloses that "[t]he respective first edges of the side support beams may be positioned and spaced from one another as desired along the side panel(s) of the mattress for forming separate side panel segments of any desired width thereacross." (*Id*., 6:10-14.)

309. A POSA implementing Lin's tensioning structures would have been motivated to look to Metzger's teachings of options for disposing such tensioning structures, as Metzger discloses almost the same structures as Lin (large-height inflatable bed incorporating diagonal tensioning structures between the top and bottom sheets, top and side sheets, and bottom and side sheets), and both Lin and Metzger are directed to solving the same problems—enhancing stability and preventing deformity in large-height inflatable beds. (*Compare* Ex. 1007, ¶¶[0002], [0006], [0013], *with* Ex. 1010, 1:60-2:51.) A POSA would have known from Metzger's teachings that using two diagonal tensioning structures with separate outside edges such that the tensioning structures were disposed at an interval along the side wall was a simple choice from a finite number of identified, predictable solutions (i.e., separate or co-linear), and would have had a reasonable

expectation of success in selecting this choice. A POSA further would have been motivated to try disposing such tensioning structures at an interval to provide the benefits of "more uniformly distributing the mattress loading across the face of the side panel(s)." (Ex. 1010, 5:64-6:5.) While disposing the two halves of Lin's side wrapping belt at an interval would require a separate plastic strip, this would have represented a minimal addition of material and cost in exchange for the added benefits of more uniform distribution of the mattress loading across the face of the side walls and creation of additional "layers" of the inflatable bed. In any event, a POSA would have thus known that either option would have trade-offs, and either would be obvious to try. (*Id.*)

310. Accordingly, it would have been obvious to implement Lin's side wrapping belt using two separate outside edges, which would have yielded a structure depicted in the following modified Figure 2 of Lin:

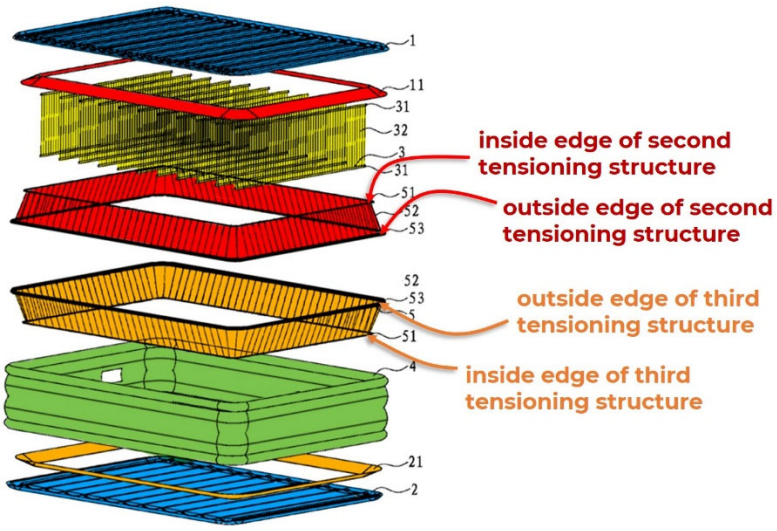

图 2

(Ex. 1007, Fig. 2.) As shown above, this modified implementation of Lin would comprise a support structure disposed in the air chamber in a longitudinal direction of at least one of the side walls, with at least two outside edges of the support structure being respectively coupled to the side wall adjacent, and at least one inside edge of the support structure being coupled to the top sheet or bottom sheet adjacent. Such a modification of Lin would not change its other features, such as its upper sheet and lower sheet (blue), side walls (green),[5] and plurality of drawbelts (yellow), disclosed by Lin as described above. (*Supra*, §§X.F.1.a-d.)

[5] As shown in the annotated Figure, the modification would change the location of the connection seams on the side walls to create additional "layers" of the inflatable bed, consistent with Metzger's teaching. (Ex. 1010, 5:60-6:10; *see also* Ex. 1013, ¶¶[0067], [0073].) As also reflected in the Figure and explained further below, a POSA would have understood that with this modification it would be beneficial to place the built-in pump in between the second and third tensioning structure. (*Infra*, ¶¶399-403.)

f. ***wherein said support structure comprises a second tensioning structure and a third tensioning structure, at least two outside edges of said second tensioning structure are respectively coupled to said at least one side wall, at least one inside edge of said second tensioning structure is coupled to said top sheet; and***

wherein at least two outside edges of said third tensioning structure are respectively coupled to said at least one side wall, at least one inside edge of said third tensioning structure is coupled to said bottom sheet.

311. As shown in annotated Figure 2 below, in addition to the side wrapping belt (5), Lin discloses "a ring-shaped upper suction piece 11" (red), and "a ring-shaped lower suction piece 21" (orange) that "are respectively disposed between the upper piece 1 and the wrapping piece 4 and between the lower piece 2 and the wrapping piece 4":

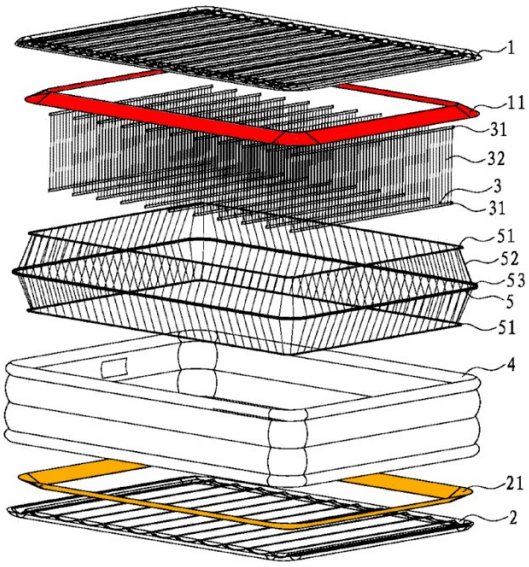

图 2

(Ex. 1007, Fig. 2; ¶[0025].)

312. As discussed above, Lin was considered by the Examiner during prosecution of the ’633 Patent. (*Supra*, §VII.B.) However, the Examiner allowed the claims after Patent Owner submitted an annotated version of Lin that omitted any reference to suction pieces 11 and 21. (*Id.*; Ex. 1003 at 484-485.) As explained below, the Examiner erred by allowing the claims without addressing Lin’s disclosures regarding suction pieces 11 and 21.

313. As also noted above, Lin was also considered by the EPO in connection with an opposition proceeding concerning the EP ’401 Patent. (*Supra*, §VII.B.2.) While I understand that the Board is not bound by and need not consider the EPO proceeding in this matter, I address it here for the sake of completeness. I understand that in the EPO proceeding, the EP Opposition Division concluded that the EP ’401 Patent claims were novel over Lin because it was not clear from Lin’s disclosure whether the suction pieces 11 and 21 were disposed on the inside or the outside of the air chamber, and thus Lin did not have a “direct and unambiguous disclosure” of two outside edges of each of second and third tensioning structures coupled to the adjacent side wall. (Ex. 1038, 911-913.) In particular, the EP Opposition Division determined that while Figure 2 of Lin suggested that the suction pieces were disposed on the inside of the air chamber, Figures 3 and 4 appeared to indicate that the suction pieces were disposed on the outside of the air chamber. (*Id.*, 912.) The EP Opposition Division further

considered Lin's disclosure that the suction pieces are respectively disposed between the upper piece and side wall and the lower piece and side wall, and determined that this description would apply to both interpretations—that is, that the suction pieces are disposed in the inside or outside the air chamber. (*Id.*, 912.) Accordingly, the EP Opposition Division concluded that "both interpretations … are equally possible" and thus Lin lacked a direct and unambiguous disclosure of a second tensioning structure with two outside edges coupled to the adjacent side wall, and a third tensioning structure with two outside edges coupled to the adjacent side wall. (Ex. 1038, 913.)

314. I disagree with the EP Opposition Division's conclusion, because as discussed below, a POSA would understand Lin to disclose that its suction pieces are disposed inside the air chamber. Regardless, and as explained below, it would have been obvious to a POSA to dispose Lin's suction pieces in the inside of the air chamber such that the outside edges of each suction piece would be coupled to the adjacent side wall. In particular, a POSA would have been motivated to combine Lin's disclosure with that of the Catalog, which teaches placing suction-piece-like tensioning structures in the inside of an inflatable bed air chamber.

315. As an initial matter, Lin itself would have suggested to a POSA to dispose the suction pieces in the inside of the air chamber. First, Lin discloses that the suction pieces "improve the aesthetics of the bed" by "prevent[ing] the

wrapping piece from overly protruding," as indicated by the connection seams in the annotated Figure 2 below:

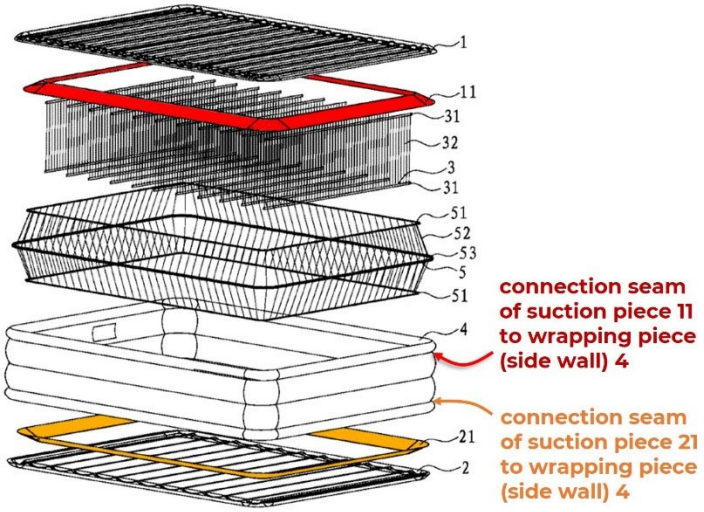

图 2

(Ex. 1007, ¶¶[0012]-[0013], Fig. 2.) A POSA would understand from the connection seams shown in the annotated Figure above that the suction pieces should be coupled to the top sheet and side walls, and bottom sheet and side walls, respectively, as recited in claim 1 of the '633 Patent. Lin does not show or disclose any other component or indentation that would create such a connection seam, and it was known in the art that such seams and indentations generally indicated the presence of tensioning structures disposed on the inside surface of an inflatable bed. (*See, e.g.*, Ex. 1001, Figs. 1, 6; Ex. 1005, 1, 5, Fig. 1; Ex. 1010, 5:60-6:14, Figs. 1, 7; Ex. 1014, ¶[0027], Fig. 3; Ex. 1013, ¶¶[0067]-[0072],Figs. 6, 9; Ex. 1008, 16.) Indeed, this is reflected by the '633 Patent's own disclosure of

the connection seams formed by its second and third tensioning structures, as shown in annotated Figure 6 below:

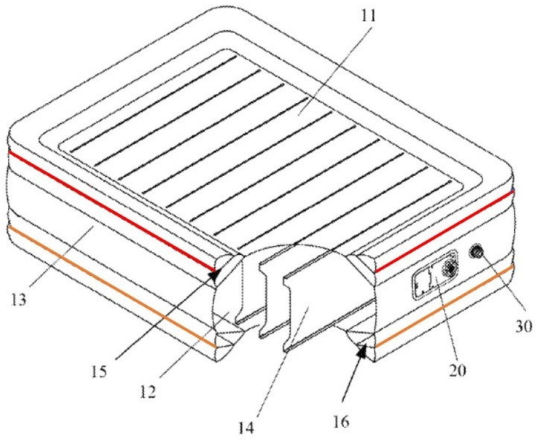

Fig. 6

. (Ex. 1001, Fig. 6; *see also id.*, Fig. 1.)

316. Second, a POSA would understand Lin's Figure 2 to irrefutably indicate that the suction pieces were disposed on the inside of the air chamber such that they coupled the top sheet and bottom sheet to the side walls. The top sheet (1) and bottom sheet (2) are depicted above and below suction pieces (11) and (21), respectively. A POSA would understand this to indicate that the suction pieces should be disposed inside of the perimeter of the top sheet and bottom sheet. (*See, e.g.,* Ex. 1007, ¶[0015] ("FIG. 2 is an exploded perspective view of a first embodiment of the present utility model"); Ex. 1037, 3 (defining "exploded view" as "An illustration or diagram of a construction that shows its parts separately ***but in positions that indicate their proper relationships to the whole***") (emphasis added).) A POSA would have understood that if Lin had intended the suction

pieces to be on the outside of the air chamber, Lin would have depicted the suction pieces to be on the top and bottom of the figure, above and below the top and bottom sheets, respectively. The position of the top and bottom sheets thus conveys to a POSA that the suction pieces should be disposed within the air chamber.

317. In addition, as shown in the annotated Figure 2 below, the Figure depicts the suction pieces as dimensionally smaller and within the perimeter of the top sheet (red arrow) and bottom sheet (orange arrow), and further within the perimeter of the side walls (green arrow):

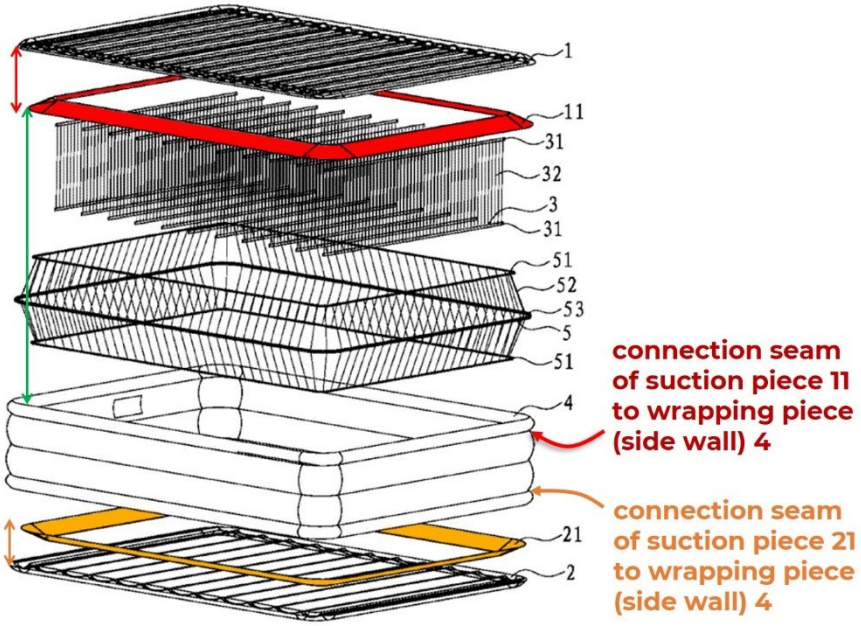

图 2

(Ex. 1007, Fig. 2.) A POSA would again understand from this drawing that Lin's suction pieces are to be disposed within the air chamber, coupled to the top and bottom sheets and side walls, respectively.

318. Moreover, while Lin's Figure 2 is irrefutable in my opinion that Lin is teaching to dispose the suction pieces on the inside of the air chamber, Figures 3 and 4 are unclear as to exactly what portions of the airbed the numerals are pointing to. (Ex. 1007, Figs. 3, 4.) That is, I do not view either Figure 3 or 4 to refute the clear direction of Figure 2. A POSA implementing Lin's inflatable bed would thus have been motivated to follow the clear direction of Figure 2 in order to meet the objectives of Lin—preventing bulging of the side walls while providing an aesthetically appealing look to the bed—rather than the unclear and confusing numerals and lines of Figures 3 and 4.

319. Nonetheless, in implementing Lin, a POSA would have sought out teachings from other prior art to determine advantageous arrangements for Lin's components, including its suction pieces. Because Lin is directed to problems with large-height inflatable beds, including the needs for stability and prevention of protrusion of the periphery of the bed, (Ex. 1007, ¶¶[0002], [0006]), a POSA would have been motivated to look to other references disclosing large-height inflatable beds similar to Lin. A POSA would thus have been motivated to look to the Catalog because the Catalog describes contemporary tensioning structures used in inflatable beds—including large-height inflatable beds—as of the Priority Date. (Ex. 1008, 3, 6-19.)

320. In particular, it was known in the art before the Priority Date that a large-height inflatable bed would have a "depth" (distance from the top and bottom surfaces of the inflatable bed) of as low as ten inches, but more typically between eighteen to twenty-four inches. (*See, e.g.*, Ex. 1010, 4:52-65.) A POSA would have thus been motivated to look for references disclosing tensioning structures for inflatable beds having such a depth. The Catalog not only discloses an inflatable bed having a depth of twenty-two inches (right within the known range of large-height inflatable beds), but further discloses that this inflatable bed has internal tensioning structures almost exactly the same as Lin's disclosure of internal tensioning structures. (Ex. 1008, 16-17.)

321. Specifically, as shown in the annotated graphics below, the Catalog discloses an "elevated 22" height" airbed comprising a top sheet, bottom sheet, and side walls, with an upper edge of the side walls (green) coupled to an outer edge of the top sheet (blue) and a lower edge of the side walls coupled to an outer edge of the bottom sheet:

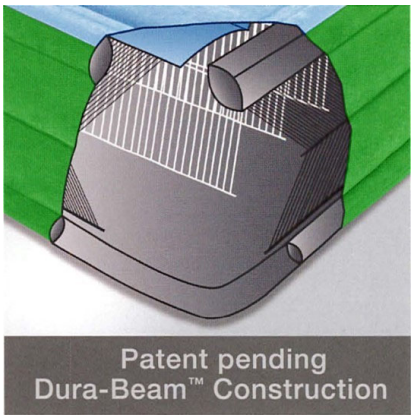

(*Id.*, 16-17.)

322. As shown in the annotated graphics below, the Catalog further discloses that the airbed has at least one first tensioning structure (in yellow, below) made of "Dura-Beam™ Construction" (comprised of "thousands of high-strength polyester fibers") disposed in the air chamber, with an upper end of the tensioning structure coupled to the top sheet (indicated by blue arrow #1) and a lower end coupled to the bottom sheet (indicated by blue arrow #2):

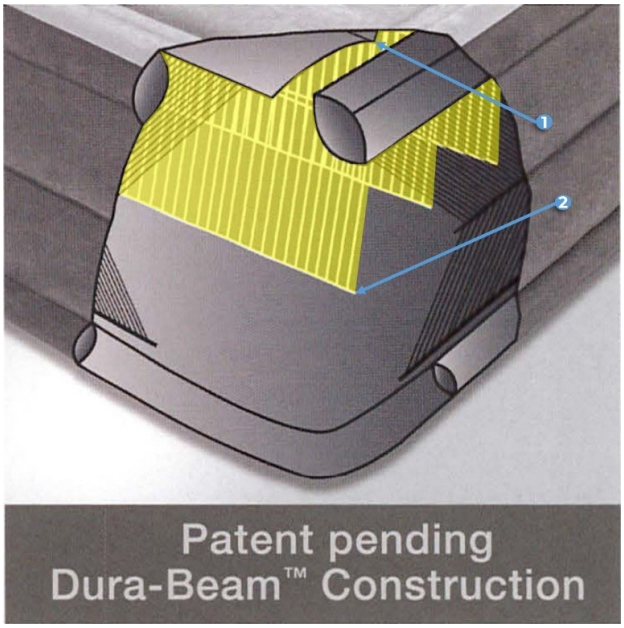

(*Id.*, 6, 16.)

323. The Catalog further discloses that the inflatable bed has a support structure disposed in the air chamber. As shown in the annotated graphic below, the support structure is comprised of (1) center structures (red and orange) made of "Dura-Beam™ Construction," with a top structure coupled to the top sheet and

side wall and a bottom structure coupled to the bottom sheet and side wall, much like Lin's "side wrapping belt 5" (*supra*, ¶¶303-305); and (2) an upper structure (red) coupled to the top sheet and side wall, and a lower structure (orange) coupled to the bottom sheet and side wall, much like Lin's upper and lower suction pieces (*supra*, ¶311):

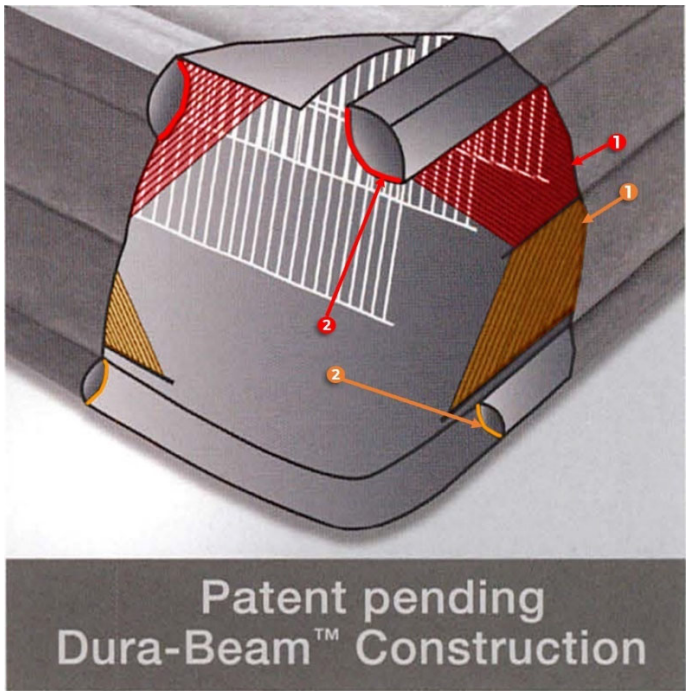

(Ex. 1008, 16.) The Catalog further indicates that the upper structure and lower structure (indicated by #2 in the Figure above) serve as tensioning structures. Specifically, a POSA would have understood from the connection seams shown in the annotated graphics below that the upper structure and lower structure would be connected between and "pull" on the top sheet and side wall (red) and bottom sheet and side wall (orange), respectively, to prevent bulging of the top sheet, bottom sheet, and side walls:

(*Id.*) Thus, a POSA would have understood that these structures would be connected between the top sheet and side walls and bottom sheet and side walls, respectively, to prevent the top sheet and side walls and bottom sheet and side walls from urging away from each other as the bed is inflated.

324. The Catalog discloses that this construction "provides the ideal comfort and firmness for a rejuvenating night's sleep" and that "[t]he horizontal air chambers provide added stability and support around the entire bed." (*Id.*, 17.)

325. Thus, a POSA implementing Lin would have been motivated to look to the Catalog's teaching of placing the entirety of upper and lower support structures within the air chamber of an inflatable bed in determining the placement of Lin's suction pieces 11 and 21. Both Lin and the Catalog disclose large-height inflatable beds with internal tensioning structures, and indeed the Catalog discloses essentially the same layout of tensioning structures as Lin. The Catalog discloses that its tensioning structures are directed to the same objectives in large-height inflatable beds identified by Lin—specifically, preventing protrusion of the periphery and enhancing the stability of the inflatable bed. (Ex. 1007, ¶¶[0002], [0006], [0013]; Ex. 1008, 6, 16-17.) A POSA would have been motivated by the Catalog's teaching to place Lin's suction pieces inside the air chamber of the inflatable bed such that they prevented the top sheet and side walls, and bottom sheet and side walls, respectively, from protruding as the bed is inflated.

326. A POSA further would have been motivated to implement Lin's suction pieces in the inside of the air chamber as disclosed in the Catalog based on the background knowledge and skill in the art a POSA would have had as of the Priority Date. As described above, it was well-known in the art as of the Priority Date that the use of tensioning structures coupled to the top sheet and side walls and bottom sheet and side walls of an air mattress would satisfy the objectives of preventing bulging or deformation of these surfaces and also improving the

aesthetics of the bed—objectives to which Lin and the Catalog are expressly directed. (*Supra*, §VI; Ex. 1007, ¶¶[0012]-[0013], [0025]; Ex. 1008, 6, 16-17.) Thus, a POSA would have been motivated to apply Lin's disclosure of its suction pieces such that they were disposed in the inside of the air chamber and were coupled to the top and bottom sheets and side walls of the inflatable bed, as taught by the Catalog. A POSA would have understood that this would have been the application of a known technique to address known issues in large-height inflatable beds, and would have yielded predictable results. (*Supra*, §VI.)

327. As described above, a POSA implementing Lin's tensioning structures would have been motivated to look to Metzger's teachings of options for disposing such tensioning structures along the side wall, and thus it would have been obvious to modify Lin to couple the upper and lower structures of the side wrapping belt to the side walls using two separate plastic strips instead of a common plastic strip such that the structures were disposed at an interval along the side wall. (*Supra*, ¶¶306-310.)

328. When implemented in this way and with Lin's suction pieces inside the air chamber (as taught by Lin's Figure 2 and the Catalog), the resulting support structure would comprise a second tensioning structure, wherein at least two outside edges of the second tensioning structure (one from upper suction piece 11 and one from the upper structure of side wrapping belt 5) are respectively coupled

to at least one side wall (wrapping piece 4), and at least one inside edge of the second tensioning structure (from upper suction piece 11 or from the upper structure of side wrapping belt 5) is coupled to said top sheet (upper piece 1), as show in the annotated Figure below:

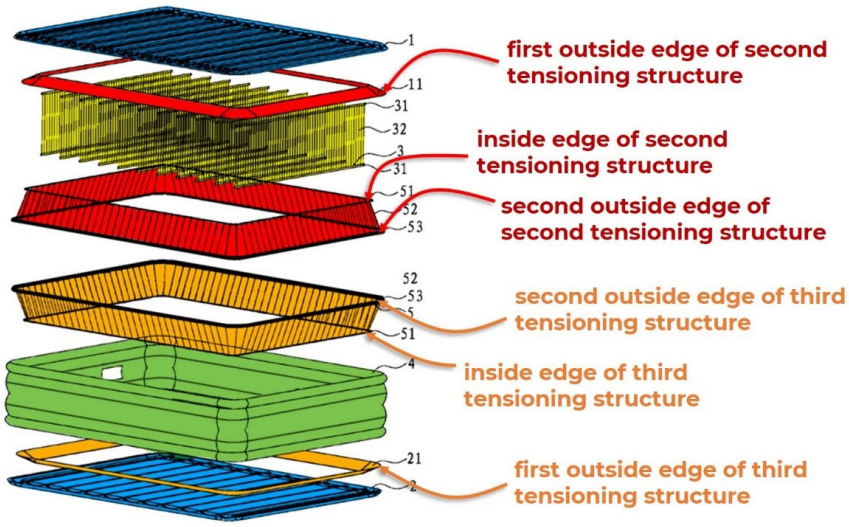

图 2

(Ex. 1007, Fig. 2.) Further, as shown above, the resulting support structure would comprise a third tensioning structure, wherein at least two outside edges of the third tensioning structure (one from lower suction piece 21 and one from the upper structure of side wrapping belt 5) are respectively coupled to at least one side wall (wrapping piece 4), and at least one inside edge of the third tensioning structure (from lower suction piece 21 or from the upper structure of side wrapping belt 5) is coupled to the bottom sheet (lower piece 2).

329. Accordingly, in my opinion, Lin in view of the Catalog and Metzger renders obvious claim 1 of the ’633 Patent.

2. Claim 2

a. The inflatable bed according to claim 1,

330. As discussed above, in my opinion Lin in view of the Catalog and Metzger renders obvious all of the limitations of claim 1. (*Supra* §X.F.1.)

b. wherein said second tensioning structure and said third tensioning structure are respectively provided with a plurality of air holes, through which an airflow passage is formed in said air chamber.

331. Lin discloses this limitation. (Ex. 1007, ¶[0023], Fig. 2.) As described above and shown in annotated Figure 2 below, Lin's side wrapping belt 5 forms part of the second tensioning structure (in red) and third tensioning structure (in orange):

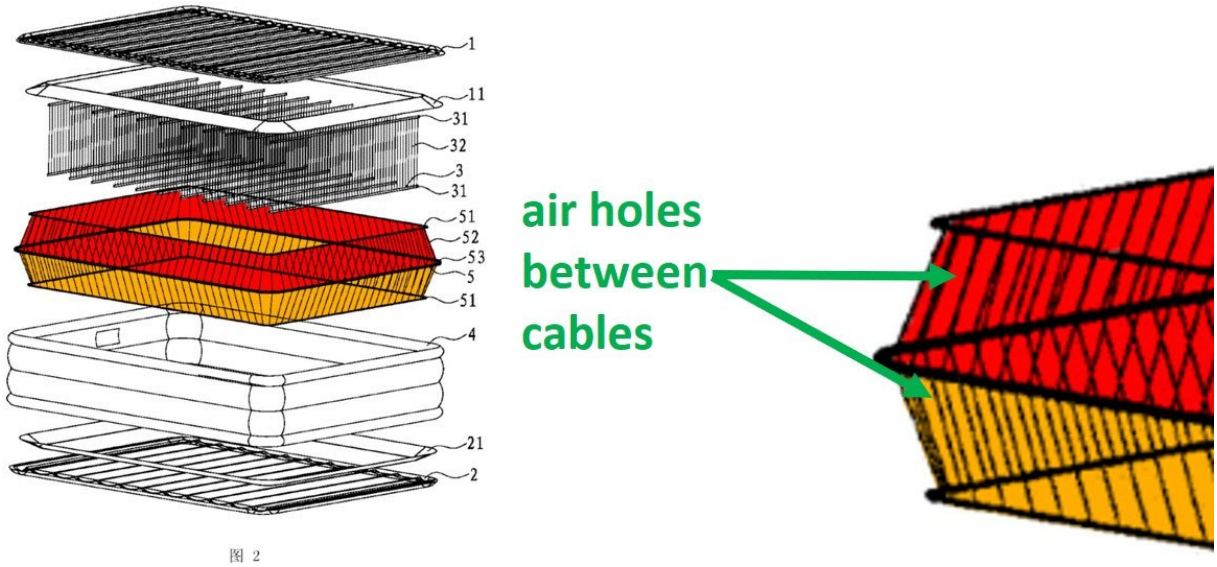

(*Id.*, Fig. 2; *supra* ¶¶303-305, 327-328.) As shown in the Figures above, side wrapping belt 5 is made of a "plurality of cables 52." (*Id.*, ¶[0023].) The space between each cable 52 constitutes an air hole such that the second and third

tensioning structures include a plurality of air holes through which an airflow passage is formed in the air chamber. (*Supra,* §VIII.A.)

332. Moreover, use of such air holes in tensioning structures was well known in the art before the Priority Date. (Ex. 1011, 3:20-22, 3:38-41, Figs. 2, 8; Ex. 1013, ¶[0068]; Ex. 1014, ¶¶[0023]-[0024], Figs. 5, 7, 8.; Ex. 1025, 3:6-10, Fig. 3; Ex. 1041, 3:55-67, 5:14-30, 5:47-55; Ex. 1015, ¶¶[0041], [0054]; Ex. 1039, 5:45-62, 6:8-11.)

333. As described above, a POSA implementing Lin's tensioning structures would have been motivated to look to Metzger's teachings of options for disposing such tensioning structures along the side wall, and thus it would have been obvious to modify Lin to couple the upper and lower structures of the side wrapping belt to the side walls using two separate plastic strips instead of a common plastic strip such that the structures were disposed at an interval along the side wall. (*Supra*, ¶¶306-310.) Modifying Lin in this way would not alter the plurality of air holes provided in each structure as explained above.

334. Accordingly, in my opinion, Lin in view of the Catalog and Metzger renders obvious claim 2 of the '633 Patent.

3. Claim 3

a. The inflatable bed according to claim 1,

335. As discussed above, in my opinion Lin in view of the Catalog and Metzger renders obvious all of the limitations of claim 1. (*Supra* §X.F.1.)

b. wherein said second tensioning structure and said third tensioning structure are disposed at an interval.

336. As described above, a POSA implementing Lin's tensioning structures would have been motivated to look to Metzger's teachings of options for disposing such tensioning structures along the side wall, and thus it would have been obvious to modify Lin to couple the upper and lower structures of the side wrapping belt to the side walls using two separate plastic strips instead of a common plastic strip such that the structures were disposed at an interval along the side wall. (*Supra*, ¶¶306-310.) As shown in the annotated and modified Figure 2 below, this would result in the second tensioning structure and third tensioning structure being disposed at an interval:

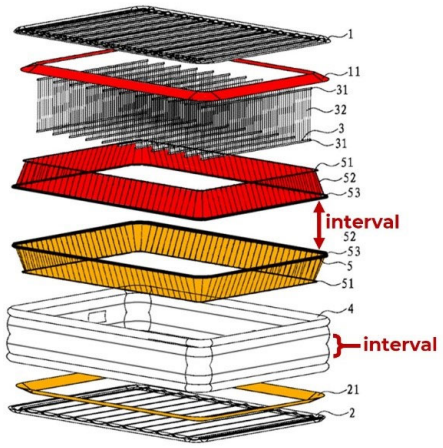

图 2

337. Accordingly, in my opinion, Lin in view of the Catalog and Metzger renders obvious claim 3 of the ’633 Patent.

4. Claim 4

a. The inflatable bed according to claim 1,

338. As discussed above, in my opinion Lin in view of the Catalog and Metzger renders obvious all of the limitations of claim 1. (*Supra* §X.F.1.)

b. wherein said second tensioning structure comprises at least two first I-beams, an outside edge and an inside edge of each of said first I-beams are respectively coupled to said side wall and said top sheet adjacent, the at least two first I-beams are disposed at an interval.

339. As described above and as shown in annotated Figure 2 below, Lin discloses a second tensioning structure (red) comprising upper suction piece 11 and the upper half of side wrapping belt 5, each of which constitutes an I-beam:

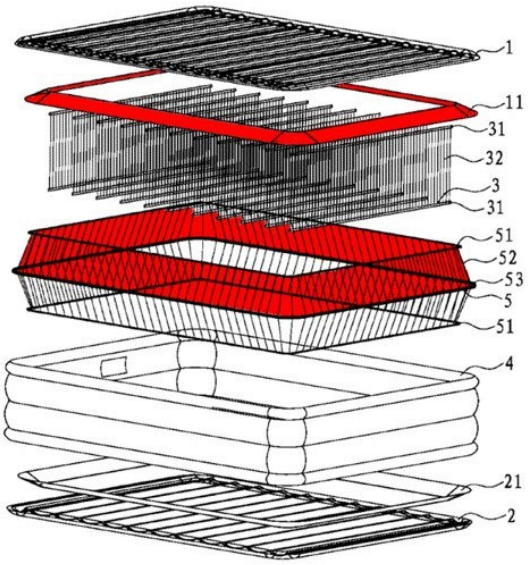

图 2

(Ex. 1007, ¶¶[0023]-[0025], Fig. 2; *supra*, §X.F.1.f.)

340. As discussed above, a POSA implementing Lin would have been motivated to look to the Catalog's teaching of placing its upper and lower tensioning structures within the air chamber of an inflatable bed, and thus would have been motivated to dispose Lin's suction pieces 11 and 21 inside the air chamber of the inflatable bed. (*Supra*, ¶¶314-326.) As shown in the annotated graphic below, the Catalog further teaches that an outside edge and inside edge of each of the two upper tensioning structures (i.e., the upper half of the center "Dura-Beam™ Construction" tensioning structure (#1 below) and the upper tensioning structure (#2 below)) should be respectively coupled to the side wall and top sheet adjacent, and the two structures should be disposed at an interval:

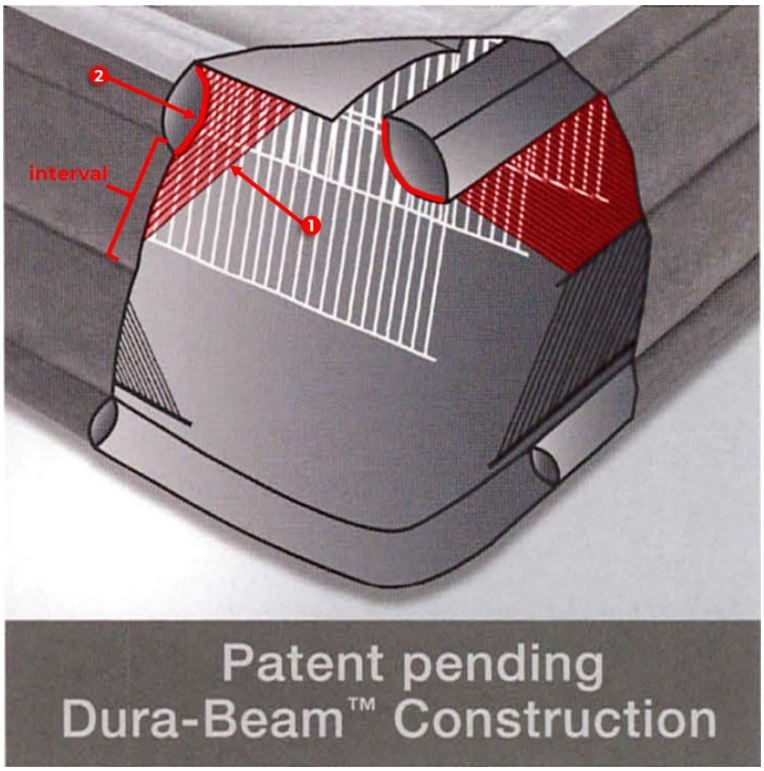

(Ex. 1008, 16.)

341. A POSA would have been motivated to combine the Catalog's teaching of coupling an outside edge and inside edge of each upper tensioning structure to the side wall and top sheet adjacent and disposing the two structures at an interval in implementing Lin's upper suction piece and side wrapping belt. A POSA would have known from the Catalog that this would enhance the stability and support of the inflatable bed by spreading the tensile load over a larger area of the sidewall and top sheet, and provide the aesthetic of a multi-layered bed, consistent with Lin's objectives. (Ex. 1007, ¶¶[0002], [0006], [0012]-[0013], [0024]-[0025]; Ex. 1008, 6, 16-17.) In addition, such teaching is consistent with Lin's disclosure. As shown in the annotated Figure below, when the upper suction piece is disposed within the air chamber, an outside edge and inside edge of each of Lin's I-beams are respectively coupled to the side wall and top sheet adjacent, and the two I-beams are disposed at an interval:

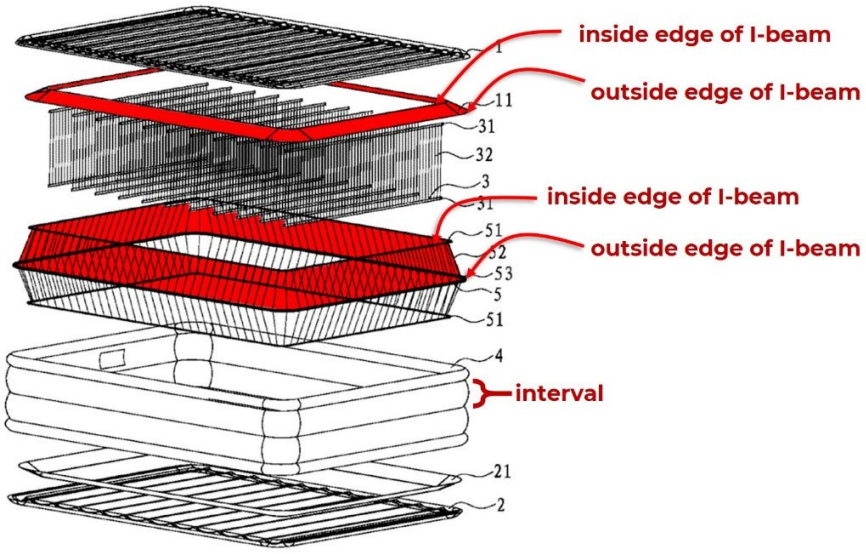

图 2

(Ex. 1007, Fig. 2.)

342. As described above, a POSA implementing Lin's tensioning structures would have been motivated to look to Metzger's teachings of options for disposing such tensioning structures along the side wall, and thus it would have been obvious to modify Lin to couple the upper and lower structures of the side wrapping belt to the side walls using two separate plastic strips instead of a common plastic strip such that the structures were disposed at an interval along the side wall. (*Supra*, ¶¶306-310.) Modifying Lin to couple the side wrapping belt to the side walls using two separate plastic strips instead of a common plastic strip as taught by Metzger would not alter the disposition of the two first I-beams of the second tensioning structure, as shown in the annotated and modified Figure 2 of Lin below:

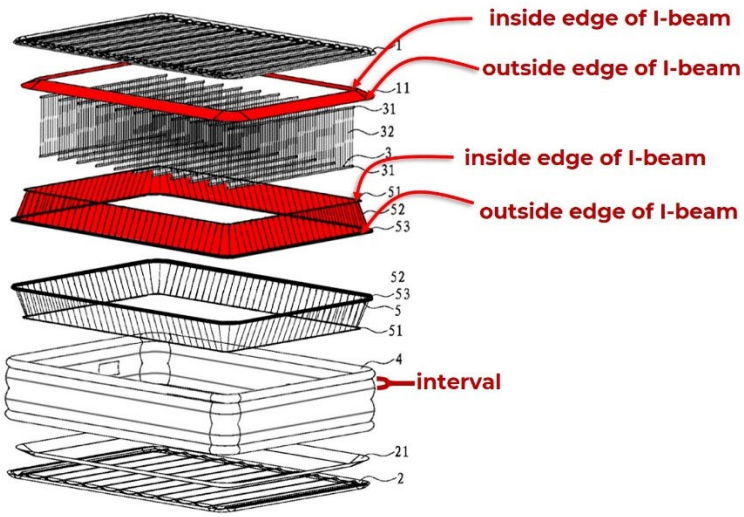

图 2

343. Accordingly, in my opinion, Lin in view of the Catalog and Metzger renders obvious claim 4 of the ’633 Patent.

5. Claim 5

a. The inflatable bed according to claim 4,

344. As discussed above, in my opinion Lin in view of the Catalog and Metzger renders obvious all of the limitations of claim 4. (*Supra* §X.F.4.)

b. wherein said at least two first I-beams are spaced apart from each other at a lower surface of said top sheet.

345. As shown in the annotated graphic below, the Catalog discloses that its two upper tensioning structures (red) are spaced apart from each other at a lower surface of the top sheet, as indicated by the connection points of each structure to the top sheet:

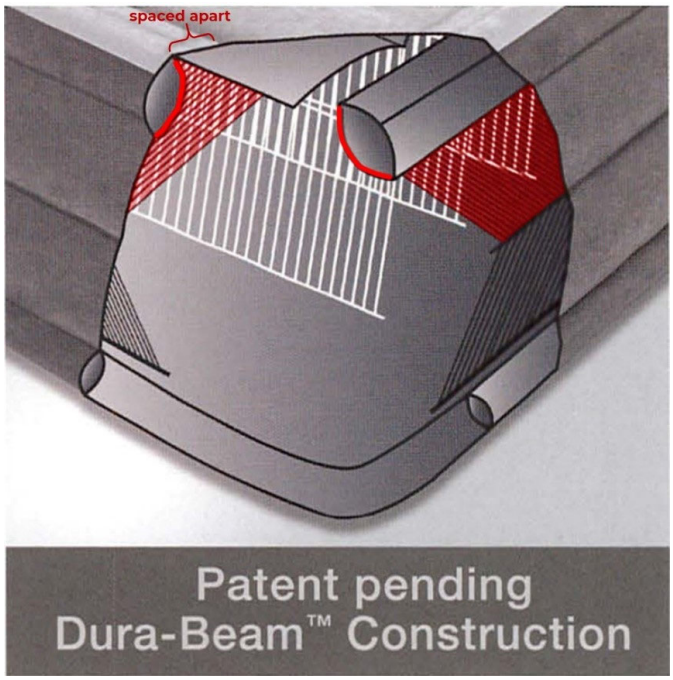

(Ex. 1008, 16.)

346. As discussed above, a POSA implementing Lin would have been motivated to look to the Catalog's teaching of placing its upper and lower support structures within the air chamber of an inflatable bed, and thus would have been motivated to dispose Lin's suction pieces 11 and 21 inside the air chamber of the inflatable bed. (*Supra*, ¶¶314-326.) A POSA further would have been motivated to follow the Catalog's teaching of disposing the two upper tensioning structures such that they were spaced apart from each other at a lower surface of the top sheet. A POSA would have known that spacing the two beams apart at the lower surface of the top sheet would have (1) provided an additional connection point to prevent bulging of the periphery of the top sheet of the inflatable bed; (2) served to more effectively spread the resistance to tensile forces along the top sheet as compared to a single connection point; and (3) added another "layer" to the top sheet (similar to the "layers" created by the two tensioning structures along the side walls), thus assisting in preventing a user from rolling off the bed while also enhancing aesthetics. (*See, e.g.*, Ex. 1008, 16-17; Ex. 1007, ¶¶[0012]-[0013], [0024]-[0025]; Ex. 1005, 4-5, Fig. 4; *supra*, §VI.C.) Lin discloses its upper suction piece as a separate structure from the side wrapping belt, and a POSA would have been motivated to follow the Catalog's teaching of spacing apart upper tensioning structures at a lower surface of the top sheet to likewise space apart

Lin's upper suction piece and side wrapping belt at a lower surface of the top sheet.

347. As described above, a POSA implementing Lin's tensioning structures would have been motivated to look to Metzger's teachings of options for disposing such tensioning structures along the side wall, and thus it would have been obvious to modify Lin to couple the upper and lower structures of the side wrapping belt to the side walls using two separate plastic strips instead of a common plastic strip such that the structures were disposed at an interval along the side wall. (*Supra*, ¶¶306-310.) Modifying Lin to couple the side wrapping belt to the side walls using two separate plastic strips instead of a common plastic strip as taught by Metzger would not alter the spaced-apart disposition of the two first I-beams at a lower surface of the top sheet.

348. Accordingly, in my opinion, Lin in view of the Catalog and Metzger renders obvious claim 5 of the '633 Patent.

6. Claim 6

a. The inflatable bed according to claim 4,

349. As discussed above, in my opinion Lin in view of the Catalog and Metzger renders obvious all of the limitations of claim 4. (*Supra* §X.F.4.)

b. wherein said at least two first I-beams are disposed at an interval on an inner surface of said side wall.

350. As described above, a POSA implementing Lin would have been motivated to look to the Catalog's teaching of placing its upper and lower support structures within the air chamber of an inflatable bed, and thus would have been motivated to dispose Lin's suction pieces 11 and 21 inside the air chamber of the inflatable bed. (*Supra*, ¶¶314-326.) As shown in the annotated graphic below, the Catalog further teaches that the two upper tensioning structures (red) should be respectively coupled to the inner surface of the side wall at locations 1 and 2 (in green) below, and thus should be disposed at an interval on an inner surface of the side wall:

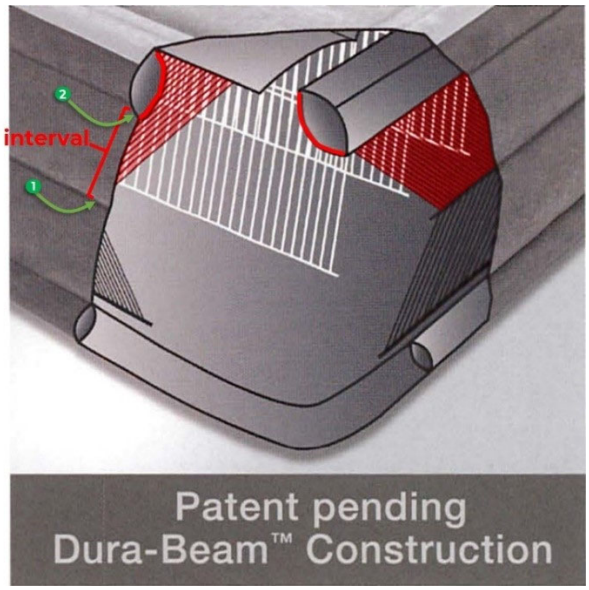

(Ex. 1008, 16.)

351. A POSA would have been motivated to combine the Catalog's teaching of disposing its two upper tensioning structures at an interval on an inner surface of the side wall in implementing Lin's upper suction piece and side wrapping belt. A POSA would have known from the Catalog that this would enhance the stability and support of the inflatable bed by spreading the tensile load over a larger area of the sidewall, and provide the aesthetic of a multi-layered bed, consistent with Lin's objectives. (Ex. 1007, ¶¶[0002], [0006], [0012]-[0013], [0024]-[0025]; Ex. 1008, 6, 16-17.) In addition, such teaching is consistent with Lin's disclosure. As shown in annotated Figure 2 below, Lin discloses that the upper suction piece and the upper half of the side wrapping belt of the second tensioning structure (red) are coupled to the inner surface of the side wall at connection seams that are spaced apart from each other, and thus the upper suction piece and upper half of the side wrapping belt are disposed at an interval on an inner surface of the side wall:

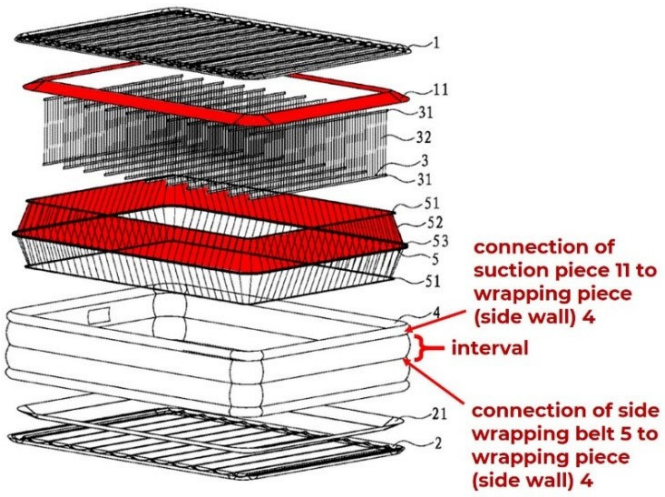

图 2

(Ex. 1007, Fig. 2.)

352. As described above, a POSA implementing Lin's tensioning structures would have been motivated to look to Metzger's teachings of options for disposing such tensioning structures along the side wall, and thus it would have been obvious to modify Lin to couple the upper and lower structures of the side wrapping belt to the side walls using two separate plastic strips instead of a common plastic strip such that the structures were disposed at an interval along the side wall. (*Supra*, ¶¶306-310.) Modifying Lin to couple the side wrapping belt to the side walls using two separate plastic strips instead of a common plastic strip as taught by Metzger would not alter the disposition of the two first I-beams at an interval on an inner surface of the side wall, as shown in the annotated and modified Figure 2 of Lin below:

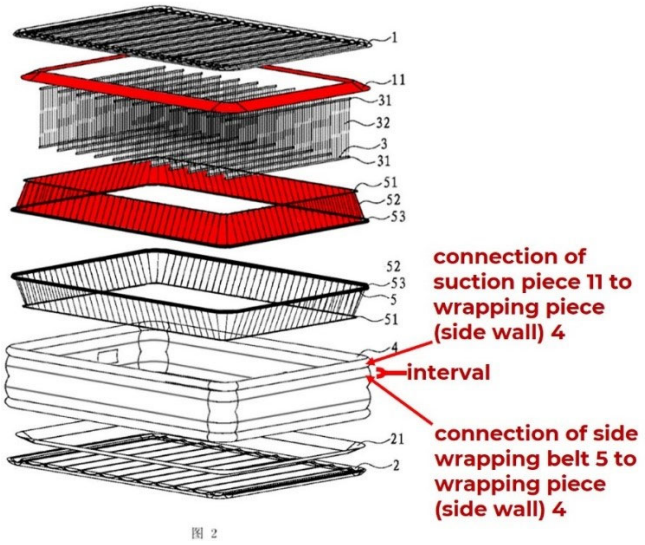

353. Accordingly, in my opinion, Lin in view of the Catalog and Metzger renders obvious claim 6 of the ’633 Patent.

7. Claim 7

a. The inflatable bed according to claim 4,

354. As discussed above, in my opinion Lin in view of the Catalog and Metzger renders obvious all of the limitations of claim 4. (*Supra* §X.F.4.)

b. wherein said at least two first I-beams as a whole are of a continuous annular structure or a segmental annular structure.

355. Lin discloses this limitation. (Ex. 1007, ¶¶[0023], [0025], Fig. 2.) As shown in annotated Figure 2 below, Lin discloses that both the upper suction piece and upper half of the side wrapping belt as a whole are of a continuous annular structure or segmental annular structure:

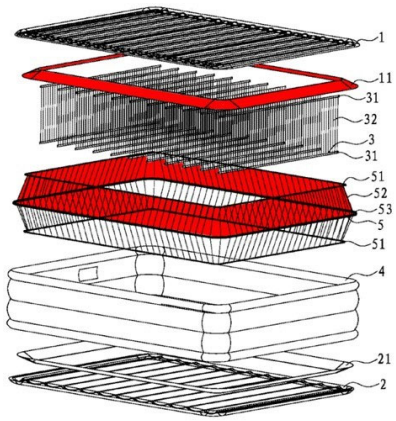

图 2

(*Id.*, ¶[0023] (describing the side wrapping belt as “ring-shaped”), ¶[0025] (describing the upper suction piece as “ring-shaped”), Fig. 2.) Indeed, the above Figure comports with the ’633 Patent’s disclosure of its I-beams having a

continuous annular structure or a segmental annular structure. (*See, e.g.*, Ex. 1001, Fig. 7.)

356. As described above, a POSA implementing Lin's tensioning structures would have been motivated to look to Metzger's teachings of options for disposing such tensioning structures along the side wall, and thus it would have been obvious to modify Lin to couple the upper and lower structures of the side wrapping belt to the side walls using two separate plastic strips instead of a common plastic strip such that the structures were disposed at an interval along the side wall. (*Supra*, ¶¶306-310.) Modifying Lin to couple the side wrapping belt to the side walls using two separate plastic strips instead of a common plastic strip as taught by Metzger would not alter the continuous or segmental annular structure of the two first I-beams, as shown in the annotated and modified Figure 2 of Lin below:

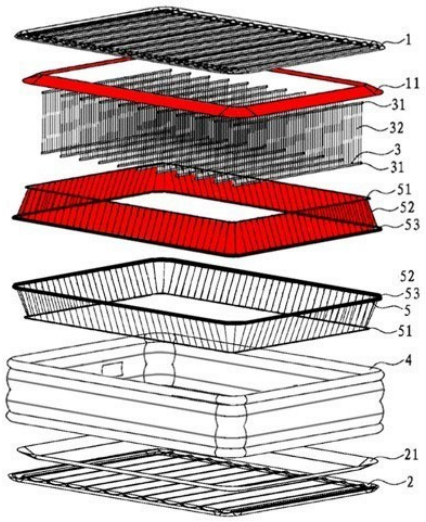

图 2

357. Accordingly, in my opinion, Lin in view of the Catalog and Metzger renders obvious claim 7 of the ’633 Patent.

8. Claim 8

a. The inflatable bed according to claim 1,

358. As discussed above, in my opinion Lin in view of the Catalog and Metzger renders obvious all of the limitations of claim 1. (*Supra* §X.F.1.)

b. wherein said third tensioning structure comprises at least two second I-beams, an outside edge and an inside edge of each of said second I-beams are respectively coupled to the side wall and said bottom sheet adjacent, the at least two second I-beams are disposed at an interval.

359. As described above and as shown in annotated Figure 2 below, Lin discloses a third tensioning structure (orange) comprising lower suction piece 21 and the lower half of side wrapping belt 5, each of which constitutes an I-beam:

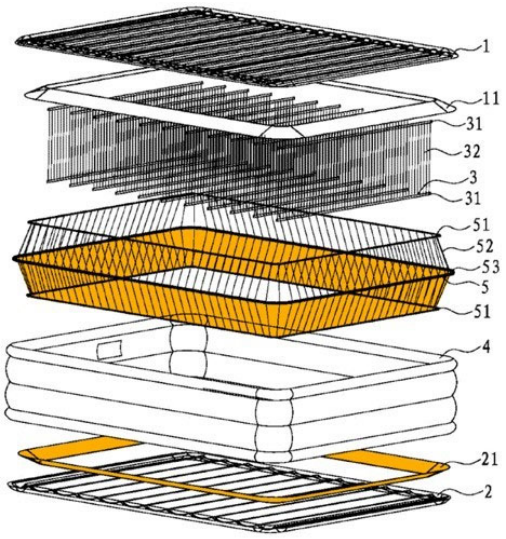

图 2

(Ex. 1007, ¶¶[0023]-[0025], Fig. 2; *supra*, §X.F.1.f.)

360. As discussed above, a POSA implementing Lin would have been motivated to look to the Catalog's teaching of placing its upper and lower tensioning structures within the air chamber of an inflatable bed, and thus would have been motivated to dispose Lin's suction pieces 11 and 21 inside the air chamber of the inflatable bed. (*Supra*, ¶¶314-326.) As shown in the annotated graphic below, the Catalog further teaches that an outside edge and inside edge of each of the two lower tensioning structures (i.e., the lower half of the center "Dura-Beam™ Construction" tensioning structure (#1 below) and the lower tensioning structure (#2 below)) are respectively coupled to the side wall and bottom sheet adjacent, and the two structures are disposed at an interval:

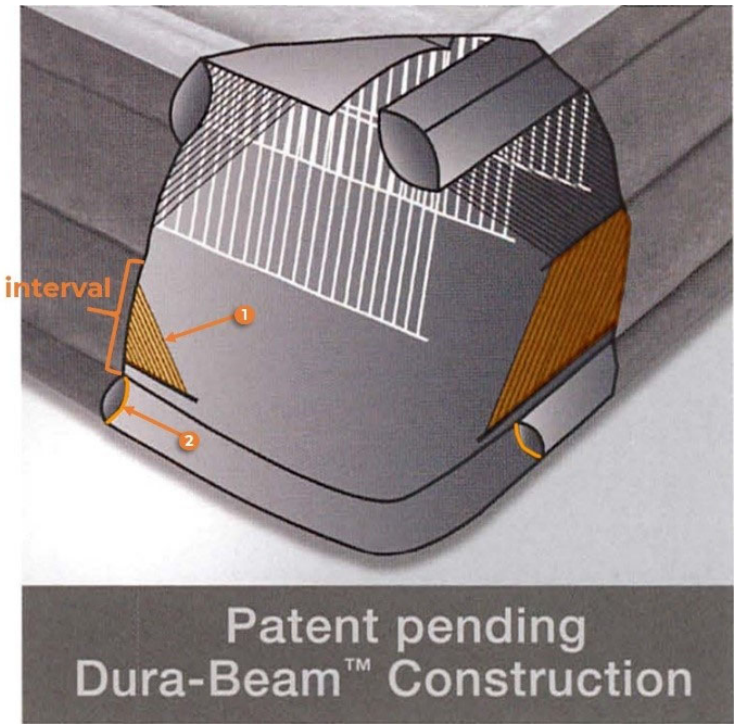

(Ex. 1008, 16.)

361. A POSA would have been motivated to combine the Catalog's teaching of coupling an outside edge and inside edge of each lower tensioning structure to the side wall and bottom sheet adjacent and disposing the two structures at an interval in implementing Lin's lower suction piece and side wrapping belt. A POSA would have known from the Catalog that this would enhance the stability and support of the inflatable bed by spreading the tensile load over a larger area of the sidewall, and provide the aesthetic of a multi-layered bed, consistent with Lin's objectives. (Ex. 1007, ¶¶[0002], [0006], [0012]-[0013], [0024]-[0025]; Ex. 1008, 6, 16-17.) In addition, such teaching is consistent with Lin's disclosure. As shown in the annotated Figure below, when the lower suction piece is disposed within the air chamber, an outside edge and inside edge of each of Lin's I-beams are respectively coupled to the side wall and top sheet adjacent, and the two I-beams are disposed at an interval:

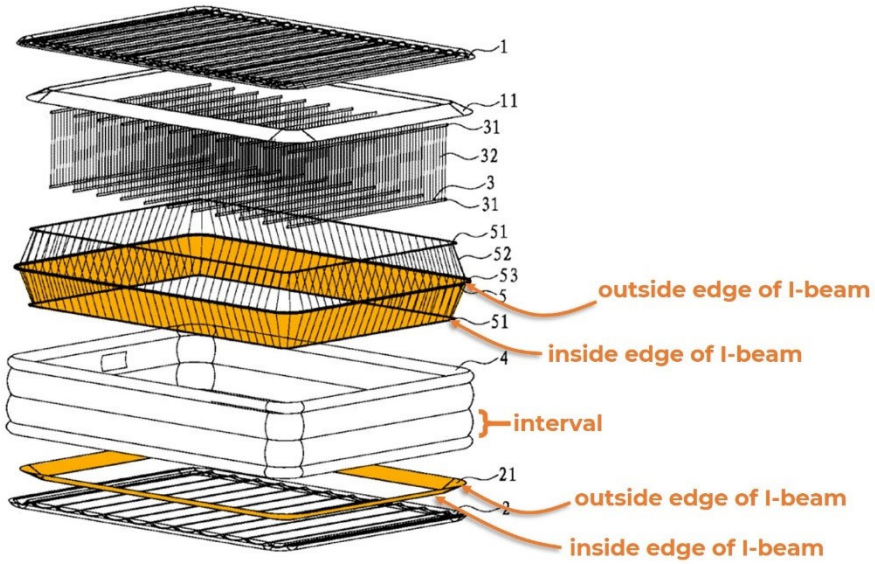

图 2

(Ex. 1007, Fig. 2.)

362. As described above, a POSA implementing Lin's tensioning structures would have been motivated to look to Metzger's teachings of options for disposing such tensioning structures along the side wall, and thus it would have been obvious to modify Lin to couple the upper and lower structures of the side wrapping belt to the side walls using two separate plastic strips instead of a common plastic strip such that the structures were disposed at an interval along the side wall. (*Supra*, ¶¶306-310.) Modifying Lin to couple the side wrapping belt to the side walls using two separate plastic strips instead of a common plastic strip as taught by Metzger would not alter the two second I-beams of the third tensioning structure, as shown in the annotated and modified Figure 2 of Lin below:

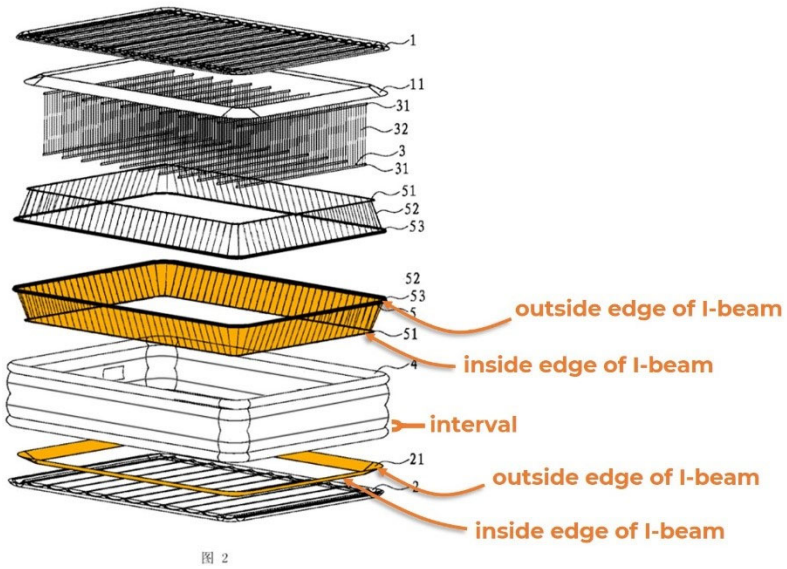

363. Accordingly, in my opinion, Lin in view of the Catalog and Metzger renders obvious claim 8 of the '633 Patent.

9. Claim 9

a. The inflatable bed according to claim 8,

364. As discussed above, in my opinion Lin in view of the Catalog and Metzger renders obvious all of the limitations of claim 8. (*Supra* §X.F.8.)

b. wherein said at least two second I-beams are spaced apart from each other at an upper surface of said bottom sheet.

365. As shown in the annotated graphic below, the Catalog discloses that its two lower tensioning structures (orange) are spaced apart from each other at an upper surface of the bottom sheet, as indicated by the connection points of each structure to the bottom sheet:

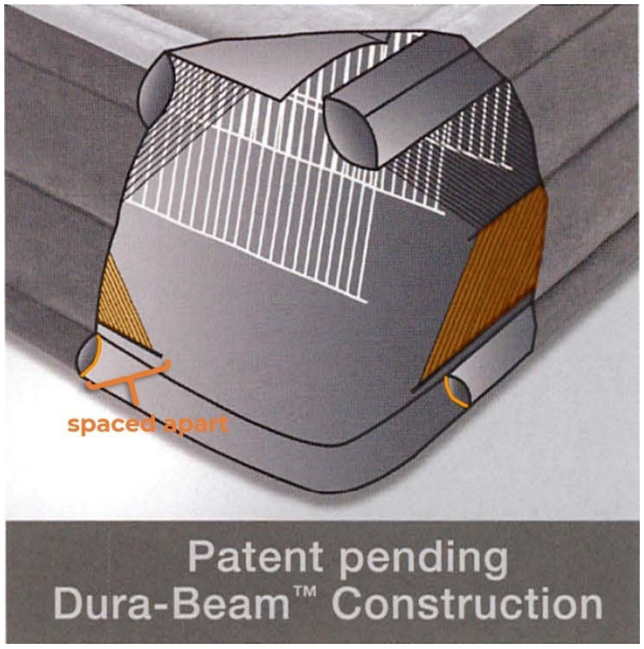

(Ex. 1008, 16.)

366. As discussed above, a POSA implementing Lin would have been motivated to look to the Catalog's teaching of placing its upper and lower support structures within the air chamber of an inflatable bed, and thus would have been motivated to dispose Lin's suction pieces 11 and 21 inside the air chamber of the inflatable bed. (*Supra*, ¶¶314-326.) A POSA further would have been motivated to follow the Catalog's teaching of disposing the two lower tensioning structures such that they were spaced apart from each other at an upper surface of the bottom sheet. A POSA would have known that spacing the two beams apart at the upper surface of the bottom sheet would have (1) provided an additional connection point to prevent bulging of the periphery of the bottom sheet of the inflatable bed; (2) served to more effectively spread the resistance to tensile forces along the bottom sheet as compared to a single connection point; and (3) added another "layer" to the bottom sheet (similar to the "layers" created by the two tensioning structures along the side walls), thus enhancing the stability of the inflatable bed while also enhancing aesthetics. (*See, e.g.*, Ex. 1008, 16-17; Ex. 1007, ¶¶[0012]-[0013], [0024]-[0025]; Ex. 1005, 4, Fig. 4; *supra*, §VI.C.) Lin discloses its lower suction piece as a separate structure from the side wrapping belt, and a POSA would have been motivated to follow the Catalog's teaching of spacing apart lower tensioning structures at an upper surface of the bottom sheet to likewise space apart Lin's lower suction piece and side wrapping belt at an upper surface of the bottom sheet.

367. As described above, a POSA implementing Lin's tensioning structures would have been motivated to look to Metzger's teachings of options for disposing such tensioning structures along the side wall, and thus it would have been obvious to modify Lin to couple the upper and lower structures of the side wrapping belt to the side walls using two separate plastic strips instead of a common plastic strip such that the structures were disposed at an interval along the side wall. (*Supra*, ¶¶306-310.) Modifying Lin to couple the side wrapping belt to the side walls using two separate plastic strips instead of a common plastic strip as taught by Metzger would not alter the spaced-apart disposition of the two second I-beams at an upper surface of the bottom sheet.

368. Accordingly, in my opinion, Lin in view of the Catalog and Metzger renders obvious claim 9 of the '633 Patent.

10. Claim 10

a. The inflatable bed according to claim 8,

369. As discussed above, in my opinion Lin in view of the Catalog and Metzger renders obvious all of the limitations of claim 8. (*Supra* §X.F.8.)

b. wherein said at least two second are disposed at an interval on the inner surface of said side wall.

370. Although the claim states "said at least two second," I assume it is intended to recite "said at least two second I-beams," as "second I-beams" are referenced in claim 8.

371. As described above, a POSA implementing Lin would have been motivated to look to the Catalog's teaching of placing its upper and lower support structures within the air chamber of an inflatable bed, and thus would have been motivated to dispose Lin's suction pieces 11 and 21 inside the air chamber of the inflatable bed. (*Supra*, ¶¶314-326.) As shown in the annotated graphic below, the Catalog further teaches that the two lower tensioning structures (orange) are respectively coupled to the inner surface of the side wall at locations 1 and 2 (in green) below, and thus are disposed at an interval on an inner surface of the side wall:

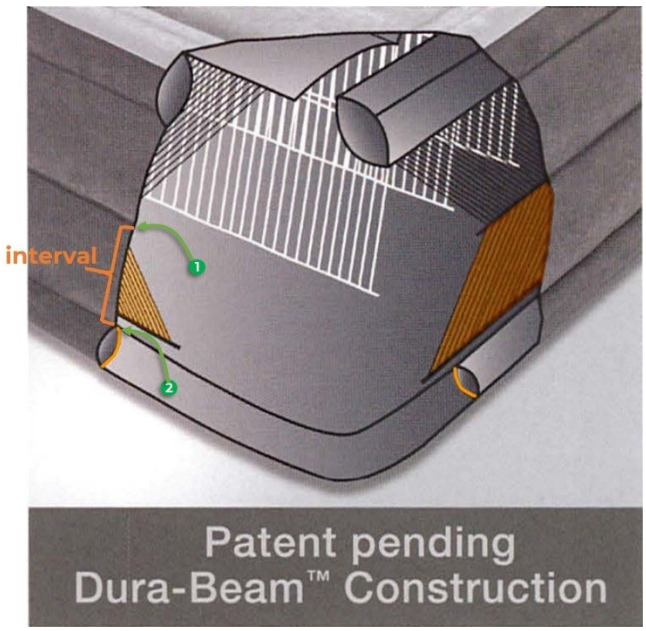

(Ex. 1008, 16.)

372. A POSA would have been motivated to combine the Catalog's teaching of disposing its two lower tensioning structures at an interval on an inner

surface of the side wall in implementing Lin's lower suction piece and side wrapping belt. A POSA would have known from the Catalog that this would enhance the stability and support of the inflatable bed by spreading the tensile load over a larger area of the sidewall and bottom sheet, and provide the aesthetic of a multi-layered bed, consistent with Lin's objectives. (Ex. 1007, ¶¶[0002], [0006], [0012]-[0013], [0024]-[0025]; Ex. 1008, 6, 16-17.) In addition, such teaching is consistent with Lin's disclosure. As shown in annotated Figure 2 below, Lin discloses that the lower suction piece and the lower half of the side wrapping belt of the third tensioning structure (orange) are coupled to the inner surface of the side wall at connection seams that are spaced apart from each other, and thus the lower suction piece and lower half of the side wrapping belt are disposed at an interval on an inner surface of the side wall:

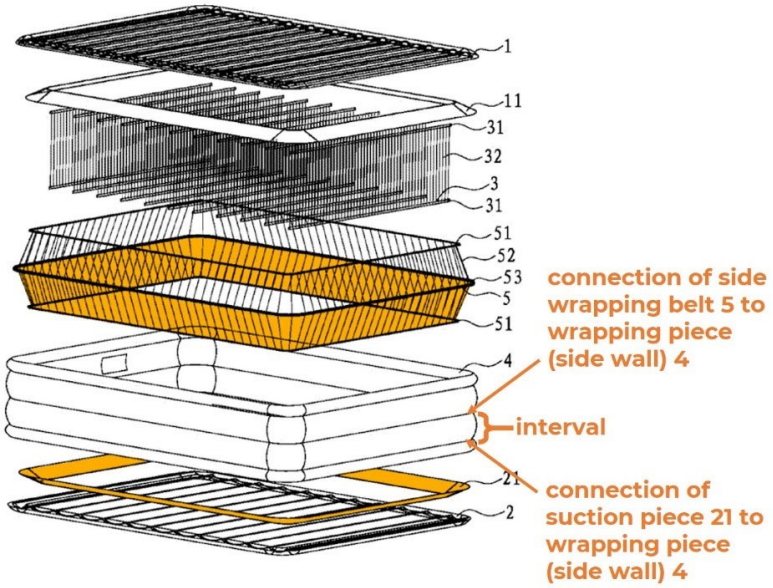

图 2

(Ex. 1007, Fig. 2.)

373. As described above, a POSA implementing Lin's tensioning structures would have been motivated to look to Metzger's teachings of options for disposing such tensioning structures along the side wall, and thus it would have been obvious to modify Lin to couple the upper and lower structures of the side wrapping belt to the side walls using two separate plastic strips instead of a common plastic strip such that the structures were disposed at an interval along the side wall. (*Supra*, ¶¶306-310.) Modifying Lin to couple the side wrapping belt to the side walls using two separate plastic strips instead of a common plastic strip as taught by Metzger would not alter the disposition of the two second I-beams at an interval on an inner surface of the side wall, as shown in the annotated and modified Figure 2 of Lin below:

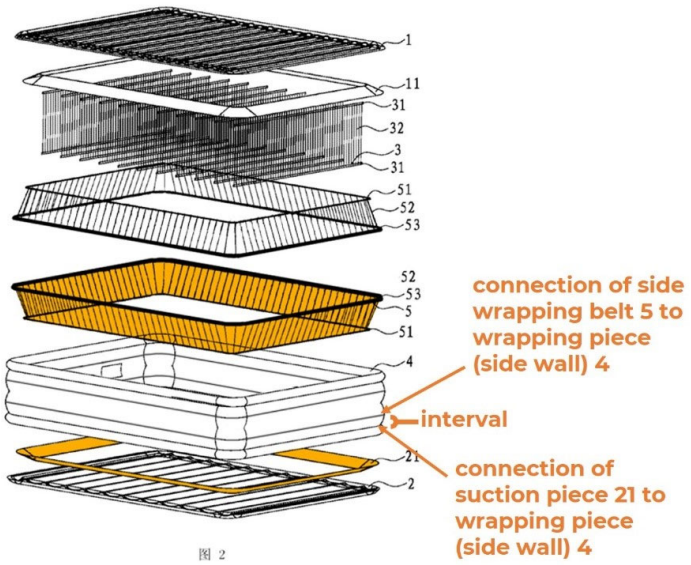

374. Accordingly, in my opinion, Lin in view of the Catalog and Metzger renders obvious claim 10 of the '633 Patent.

11. Claim 11

a. The inflatable bed according to claim 8,

375. As discussed above, in my opinion Lin in view of the Catalog and Metzger renders obvious all of the limitations of claim 8. (*Supra* §X.F.8.)

b. wherein said at least two second I-beam as a whole are of a continuous annular structure or a segmental annular structure.

376. Lin discloses this limitation. (Ex. 1007, ¶¶[0023], [0025], Fig. 2.) As shown in annotated Figure 2 below, Lin discloses that both the lower suction piece and lower half of the side wrapping belt as a whole are of a continuous annular structure or segmental annular structure:

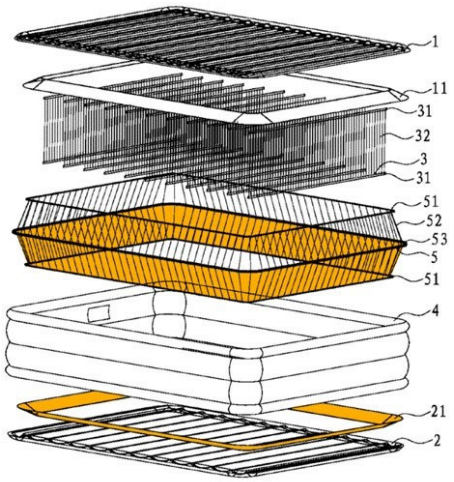

图 2

(*Id.*, ¶[0023] (describing the side wrapping belt as "ring-shaped"), ¶[0025] (describing the lower suction piece as "ring-shaped"), Fig. 2.) Indeed, the above Figure comports with the '633 Patent's disclosure of its I-beams having a continuous annular structure or a segmental annular structure. (Ex. 1001, Fig. 7.)

377. As described above, a POSA implementing Lin's tensioning structures would have been motivated to look to Metzger's teachings of options for disposing such tensioning structures along the side wall, and thus it would have been obvious to modify Lin to couple the upper and lower structures of the side wrapping belt to the side walls using two separate plastic strips instead of a common plastic strip such that the structures were disposed at an interval along the side wall. (*Supra*, ¶¶306-310.) Modifying Lin to couple the side wrapping belt to the side walls using two separate plastic strips instead of a common plastic strip as taught by Metzger (*supra*, §X.F.1.e) would not alter the continuous or segmental annular structure of the two second I-beams, as shown in the annotated and modified Figure 2 of Lin below:

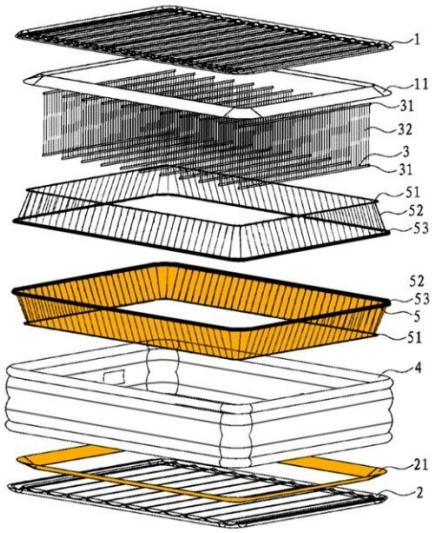

图 2

378. Accordingly, in my opinion, Lin in view of the Catalog and Metzger renders obvious claim 11 of the '633 Patent.

12. Claim 12

a. The inflatable bed according to claim 1,

379. As discussed above, in my opinion Lin in view of the Catalog and Metzger renders obvious all of the limitations of claim 1. (*Supra* §X.F.1.)

b. wherein said first tensioning structure, said second tensioning structure and said third tensioning structure are all made of thermoplastic plastic sheet.

380. Lin discloses this limitation. (Ex. 1007, ¶¶[0009]-[0011], [0023], [0028].) Lin discloses that its drawbelts 3 (the first tensioning structure) include "plastic strips at both ends" that are "used for welding with the upper piece 1 and the lower piece 2[.]" (*Id.*, [0023]; *see also id.*, ¶[0011].) As described above, the upper half of Lin's side wrapping belt (5) forms part of the second tensioning structure and includes a plastic strip 51 and plastic strip 53, and the lower half of Lin's side wrapping belt forms part of the third tensioning structure and includes a plastic strip 51 and plastic strip 53. (*Id.*, ¶¶[0009]-[0010], [0023].)

381. Alternatively, Lin teaches that drawbelts 3 (the first tensioning structure) and side wrapping belt 5 (forming parts of the second and third tensioning structures) "can alternatively be implemented with a linear drawbelt or a cylindrical drawbelt of an integral plastic piece as long as they satisfy the requirements of the internal pressure of the inflatable product." (*Id.*, ¶[0028].)

382. Lin discloses that its drawbelts 3 (first tensioning structure) are

coupled to the top and bottom sheets by welding, and that its side wrapping belt (second and third tensioning structures) are coupled to the top sheet and side wall, and to the bottom sheet and side wall, respectively, by welding. (*Id.*, ¶¶[0011], [0023].) A POSA would have known that welding the plastic strips (or integral plastic piece) of Lin's tensioning structures would necessarily require that these materials be thermoplastic. (*See, e.g.*, Ex. 1035, 4 (defining "thermoplastic" as "capable of softening or fusing when heated and of hardening again when cooled").)

383. In addition, Metzger discloses that each of the spaced coils (first tensioning structure) and side support beams (second and third tensioning structures) may be formed of "polyvinylchloride, polyethylene, and the like," and may be attached to the top and bottom sheet and side walls of the bed "by using any known heat welding, fusing, or bonding technique." (Ex. 1010, 6:15-30.)

384. A POSA would have known from these disclosures that these tensioning structures constituted thermoplastic plastic sheets. First, polyvinylchloride (PVC) is a known thermoplastic plastic sheet. (*See, e.g.,* Ex. 1046, 543 (defining PVC as "[a] thermoplastic prepared by free-radical polymerization of vinyl chloride in dispersion (emulsion), bulk, or suspension processes"); Ex. 1047, 1 ("Poly(vinyl chloride) (PVC) is one of the major thermoplastics with low production cost, as well as good insulation performance,

chemical and fire resistance; it is widely used in different fields. It ranks second among the most used thermoplastics and is considered the most versatile macromolecular compound."); Ex. 1048, Abstract (identifying PVC as thermoplastic).) Moreover, a POSA would have understood that connecting plastic by heat welding or fusing would necessarily require that the tensioning structures would be made of thermoplastic plastic sheet. (*See, e.g.*, Ex. 1035, 4.)

385. A POSA would have known from Metzger's teaching and Lin's disclosure of using "an integral plastic piece" (Ex. 1007, ¶[0028]), that Lin could be implemented by using thermoplastic sheets for the entirety of the drawbelt, side wrapping belt, and suction pieces. A POSA would have known that using thermoplastic sheets for these tensioning structures would simplify the manufacturing process by using one material that could be easily welded to the top sheet, bottom sheet, and side walls, while providing a "flexible barrier material" and "fluid tight edge connection" between the outer sheets and tensioning structures. (Ex. 1010, 6:15-30.) Indeed, I understand that Patent Owner's own expert in a prior IPR proceeding asserted that "using PVC for the interior and exterior components of a mattress was well-known in the art and in the background knowledge of a PHOSITA" before the Priority Date, and that "using the same material as the top and bottom side of the mattress and the extending parts would ensure that they could be suitably welded together." (Ex. 1043, ¶¶21, 105.) While

using thermoplastic sheets for each tensioning structure in place of Lin's cables and plastic strips might add weight and extra material to the inflatable bed, a POSA would have known that the choice between such materials naturally presented trade-offs, and it would have been obvious to try implementing the first, second, and third tensioning structures with thermoplastic sheets depending on the application and cost, weight, and manufacturing considerations.

386. Accordingly, in my opinion, Lin in view of the Catalog and Metzger renders obvious claim 12 of the '633 Patent.

13. Claim 13

a. The inflatable bed according to claim 1,

387. As discussed above, in my opinion Lin in view of the Catalog and Metzger renders obvious all of the limitations of claim 1. (*Supra* §X.F.1.)

b. wherein one or more of said first tensioning structure, said second tensioning structure and said third tensioning structure at least partially comprise mesh, laminated plastic sheet or a threads.

388. Lin discloses that its drawbelts 3 (the first tensioning structure) comprise "cables 32," and that its side wrapping belt 5 (forming parts of the second and third tensioning structures) comprise "cables 52." (Ex. 1007, ¶[0023].) A POSA would have understood that these cables constituted a type of thread. (Ex. 1035, 5 (defining "thread" as "a filament, a group of filaments twisted together, or

a filamentous length formed by spinning and twisting short textile fibers into a continuous strand”).)

389. As discussed above, a POSA implementing Lin would have been motivated to look to the Catalog’s teaching of placing its upper and lower tensioning structures within the air chamber of an inflatable bed, and thus would have been motivated to dispose Lin’s suction pieces 11 and 21 inside the air chamber of the inflatable bed. (*Supra*, ¶¶314-326.) In addition, the Catalog discloses that each of its tensioning structures at least partially comprise “Dura-Beam™ Construction,” which is comprised of “thousands of high-strength polyester fibers.” (*Id.*, 6, 16-17.) The Catalog further discloses that the polyester fibers of “Dura-Beam™ Construction” are “spun.” (Ex. 1008, 13.) A POSA would have known that spun polyester fibers constitute a type of thread, and thus the tensioning structures are each comprised of threads. (Ex. 1035, 5 (defining “thread” as “a filament, a group of filaments twisted together, or a filamentous length formed by spinning and twisting short textile fibers into a continuous strand”).)

390. A POSA would have been motivated to use “Dura-Beam™ Construction” as disclosed by the Catalog for Lin’s first, second, and third tensioning structures, as a POSA would have known from the Catalog that this would enhance the durability, stability, support, and aesthetics of the inflatable

bed, consistent with Lin's objectives. (Ex. 1007, ¶¶[0002], [0006], [0012]-[0013], [0024]-[0025]; Ex. 1008, 6, 16-17.) A POSA would have known that use of Dura-Beam™ Construction for the tensioning structures of Lin would have been a simple substitution of known materials, and would have yielded predictable results.

391. As described above, a POSA implementing Lin's tensioning structures would have been motivated to look to Metzger's teachings of options for disposing such tensioning structures along the side wall, and thus it would have been obvious to modify Lin to couple the upper and lower structures of the side wrapping belt to the side walls using two separate plastic strips instead of a common plastic strip such that the structures were disposed at an interval along the side wall. (*Supra*, ¶¶306-310.) Modifying Lin to couple the side wrapping belt to the side walls using two separate plastic strips instead of a common plastic strip as taught by Metzger would not alter Lin's use of threads for one or more of the first, second, and third tensioning structure.

392. Accordingly, in my opinion, Lin in view of the Catalog and Metzger renders obvious claim 13 of the '633 Patent.

14. Claim 17

a. The inflatable bed according to claim 1,

393. As discussed above, in my opinion Lin in view of the Catalog and Metzger renders obvious all of the limitations of claim 1. (*Supra* §X.F.1.)

b. wherein a location where said top sheet is located in the inside part of an upper edge of said second tensioning structure is lower than the location where said top sheet is located in the outside part of the upper edge of said second tensioning structure.

394. With the understanding of the meaning of this claim limitation I set out above (*supra*, ¶183), the Catalog discloses this limitation. As shown in the annotated graphic below, the Catalog discloses an upper edge of a second tensioning structure (red arrow), and that a location where the top sheet is located at the inside part of the upper edge (blue arrow #1) is lower than a location where the top sheet is located at the outside part of the upper edge (blue arrow #2):

(Ex. 1008, 16.)

395. As discussed above, a POSA implementing Lin would have been motivated to look to the Catalog's teaching of placing its upper and lower support structures within the air chamber of an inflatable bed, and thus would have been

motivated to dispose Lin's suction pieces 11 and 21 inside the air chamber of the inflatable bed. (*Supra*, ¶¶314-326.) A POSA would have been motivated to combine the Catalog's teaching of providing that a location where the top sheet is located at the inside part of an upper edge of a second tensioning structure is lower than a location where the top sheet is located at the outside part of the upper edge in implementing Lin's upper suction piece and side wrapping belt. A POSA would have known from the Catalog that this would enhance the stability and support of the inflatable bed and provide the aesthetic of a multi-layered bed, consistent with Lin's objectives. (Ex. 1007, ¶¶[0002], [0006], [0012]-[0013], [0024]-[0025]; Ex. 1008, 6, 16-17.)

396. As described above, a POSA implementing Lin's tensioning structures would have been motivated to look to Metzger's teachings of options for disposing such tensioning structures along the side wall, and thus it would have been obvious to modify Lin to couple the upper and lower structures of the side wrapping belt to the side walls using two separate plastic strips instead of a common plastic strip such that the structures were disposed at an interval along the side wall. (*Supra*, ¶¶306-310.) Modifying Lin to couple the side wrapping belt to the side walls using two separate plastic strips instead of a common plastic strip as taught by Metzger would not alter the location of the upper edges of the second tensioning structure in relation to the top sheet as explained above.

397. Accordingly, in my opinion, Lin in view of the Catalog and Metzger renders obvious claim 17 of the ’633 Patent.

15. Claim 19

a. The inflatable bed according to claim 1,

398. As discussed above, in my opinion Lin in view of the Catalog and Metzger renders obvious all of the limitations of claim 1. (*Supra* §X.F.1.)

b. wherein said inflatable bed further comprises a built-in air pump, which is disposed on said side wall and is located between a lower edge of said second tensioning structure and an upper edge of said third tensioning structure for inflating said air chamber.

399. As shown in the annotated graphic below, the Catalog discloses a “Built-in AC electric pump” for “fast inflation and deflation” of the airbed, disposed between the edges of two tensioning structures:

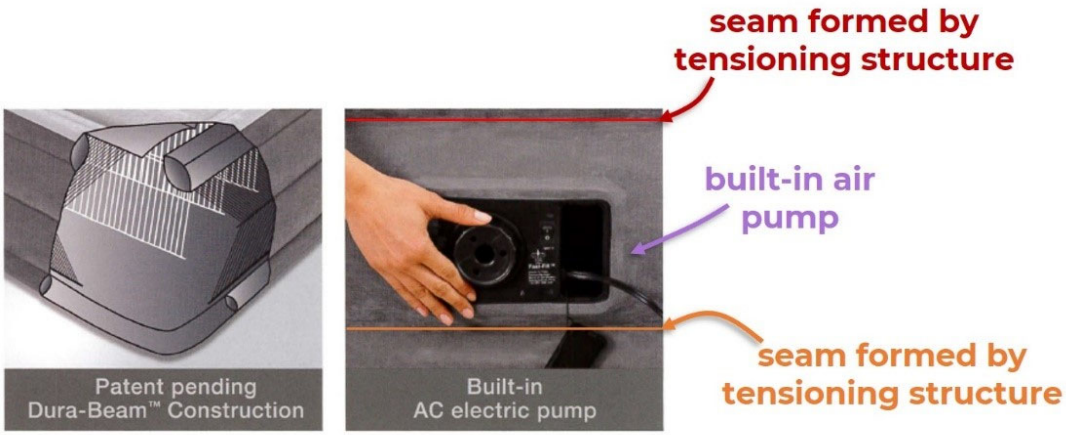

AIRBED WITH BUILT-IN ELECTRIC PUMP

Item	Size	Approximate Inflated Size	Built-in Pump	Case Pack	Case Weight
64417 / E 64418	Queen	60" x 80" x 22" (152cm x 203cm x 56cm)	110 – 120V 220 – 240V	2 Ea.	43.6 Lb. (19.8kg)

(Ex. 1008, 16-17.)

400. In addition, as shown in annotated Figure 2 below, Lin discloses that one of its side walls (wrapping piece 4) has a space (purple), also in between the edges of two tensioning structures, which a POSA would have understood to indicate a location for placement of a built-in air pump:

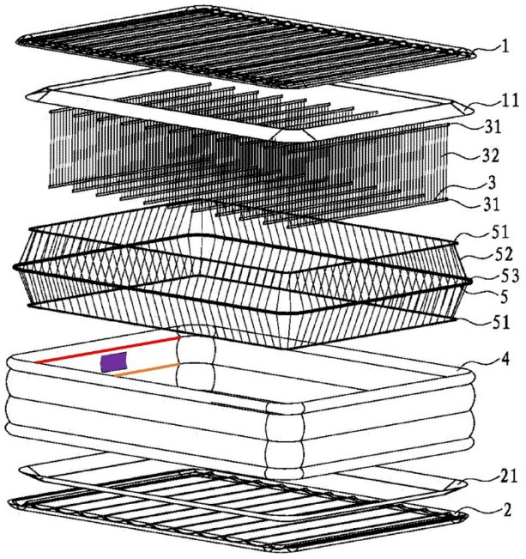

图 2

(Ex. 1007, Fig. 2.)

401. As discussed above, it was known in the art as of the Priority Date that it would be advantageous to provide an inflatable bed with a built-in air pump, as such pumps provided benefits such as user convenience, spatial efficiency, increased durability, cost-efficiency, and marketability. (*Supra*, ¶¶36, 286.) A POSA would know from the Catalog's teaching that such a built-in pump could be provided effectively in Lin's airbed, as the Catalog discloses the same layout of tensioning structures as in Lin, and Lin contemplates providing a built-in air pump along its side wall.

402. As also described above, a POSA implementing Lin's tensioning structures would have been motivated to look to Metzger's teachings of options for disposing such tensioning structures along the side wall, and thus it would have been obvious to modify Lin to couple the upper and lower structures of the side wrapping belt to the side walls using two separate plastic strips instead of a common plastic strip such that the structures were disposed at an interval along the side wall. (*Supra*, ¶¶306-310.) As shown in the annotated and modified Figure 2 of Lin below, in modifying Lin in this way, a POSA would have known that the pump could be placed in different locations along the side wall, including in between the outside edge of upper suction piece 11 (top red line) and the outer plastic strip of the upper structure of the side wrapping belt (bottom red line) (as shown in the first annotated Figure below), or in between outer plastic strip of the upper structure of the side wrapping belt (bottom red line) and above the outer plastic strip of the lower structure of the side wrapping belt (top orange line) (as shown in the second annotated Figure below):

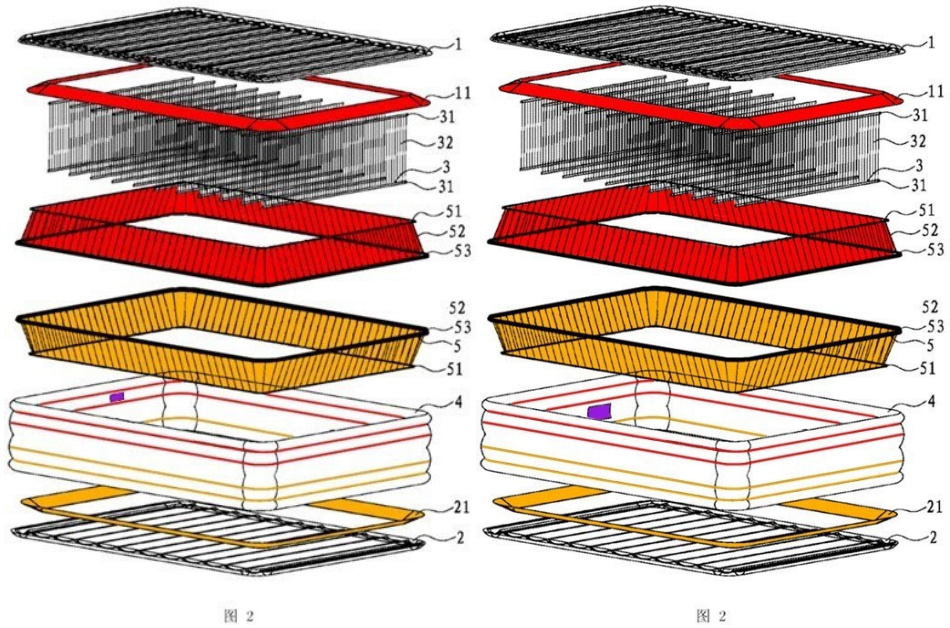

(Ex. 1007, Fig. 2.)

403. A POSA would have known that the specific location of the pump on the side wall reflects a design choice from among a finite number of options, and a POSA would have a reasonable expectation of success in placing the pump in either location shown above. While either option would thus have been obvious to try, a POSA would have known that placing the pump as shown in the second option above (in between the plastic strips of the upper and lower structures of the side wrapping belt) would provide more space to install the pump, ensure that the pump was not immediately adjacent to the tensioning structures, and minimize any interference between the pump and the tensioning structures. Indeed, as shown in the annotated and modified Figure 7 of Metzger below, where two tensioning structures are used to connect each of the top sheet and side walls and bottom sheet

and side walls as disclosed by Lin and the Catalog, and these upper and lower tensioning structures are disposed at an interval as taught by Metzger, there is a gap in between the upper and lower tensioning structures:

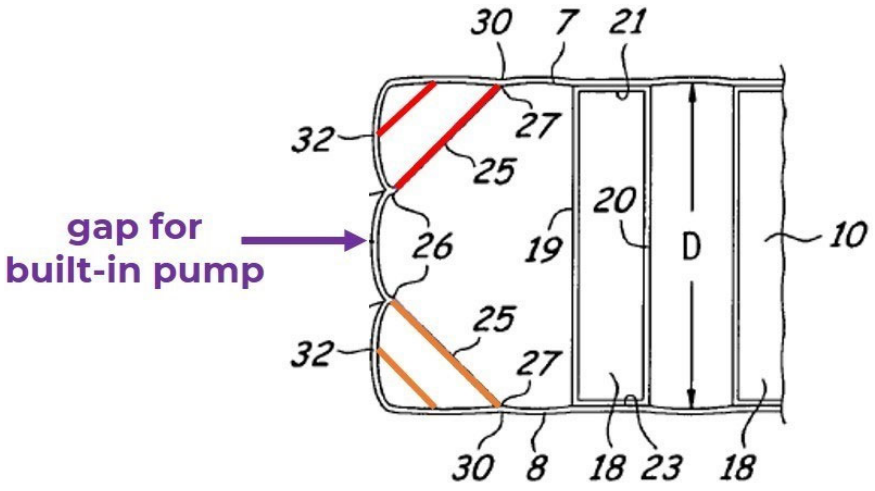

(Ex. 1010, Fig. 7.) This would naturally suggest to a POSA to place a built-in pump in the gap between the upper and lower tensioning structures, to achieve the benefits of allowing more space to install the pump, ensuring that the pump was not immediately adjacent to the tensioning structures, and minimizing any interference between the pump and the tensioning structures. While a POSA would have known that the pump could also be disposed between the upper two structures comprising the second tensioning structure (red in Figure above), or between the lower two structures comprising the third tensioning structure (orange in Figure above), as either would be a viable design option, a POSA would have known that disposing the pump in the gap between the upper two structures (red) and lower two structures (orange) would have provided the benefits noted above—

providing more space to install the pump, ensuring that the pump was not immediately adjacent to the tensioning structures, and minimizing any interference between the pump and the tensioning structures. (*Id.*)

404. The combination of Lin, the Catalog, and Metzger therefore discloses or suggests a built-in air pump disposed on a side wall and located between a lower edge of the second tensioning structure and an upper edge of the third tensioning structure for inflating the air chamber. Lin in view of the Catalog and Metzger therefore renders obvious claim 19.

405. Accordingly, in my opinion, Lin in view of the Catalog and Metzger renders obvious claim 19 of the '633 Patent.

16. Claim 20

a. The inflatable bed according to claim 1,

406. As discussed above, in my opinion Lin in view of the Catalog and Metzger renders obvious all of the limitations of claim 1. (*Supra* §X.F.1.)

b. wherein said inflatable bed further comprises an air valve, which is disposed on said side wall for the inflation and deflation of said inflatable bed.

The Catalog discloses that the built-in air pump located on the side wall allows for inflating and deflating the airbed. (Ex. 1008, 16 (disclosing inflating times for pump), 17 ("For added convenience, the bed comes with a powerful built-in electric pump for fast inflation and deflation.").) A POSA would have

understood that the pump thus comprised an air valve disposed on the side wall for the inflation and deflation of the inflatable bed, as can be seen in the annotated graphic below:

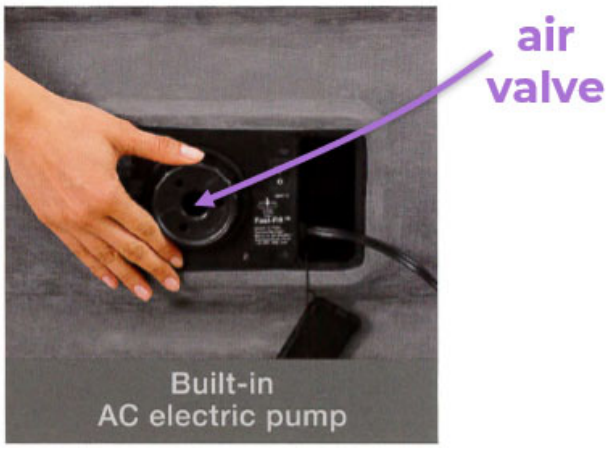

(Ex. 1008, 16; *see also* Ex. 1035, 7 (defining "valve" as "any of numerous mechanical devices by which the flow of liquid, gas, or loose material in bulk may be started, stopped, or regulated by a movable part that opens, shuts, or partially obstructs one or more ports or passageways").) Furthermore, the Catalog discloses that the inflatable bed is "[a]ir lock tested" (Ex. 1008, 17), which would have indicated to a POSA that the bed would necessarily have an air valve to lock in air after the bed were inflated.

407. Even if the Catalog's disclosures of a built-in air pump and air lock referred to above did not constitute an air valve for inflation and deflation of the inflatable bed, it would have been obvious to dispose such an air valve on the side wall of the inflatable bed. First, use of air valves was well-known in the art before

the Priority Date. (*Supra*, ¶36.) For example, the Catalog explicitly discloses that air valves were used in connection with inflatable beds for inflation and deflation. (*See, e.g., id.*, 26, 30.) It would have been obvious to a POSA that such air valves would be used with large-height inflatable beds such as that disclosed on pages 16-17 of the Catalog, either in addition to or in lieu of a built-in air pump. (*See, e.g.*, *id.*; Ex. 1011, 3:38-44 ("[T]he air bed can be filled up with air once for its whole air-chambers from air-valve 10 via air-holes 41, 51, 81 with a built-in electrical air pump or other air pump."); Ex. 1012, 1:33-51, 5:1-39 (disclosing use of air valves as part of built-in air pumps).)

408. As also described above, a POSA implementing Lin's tensioning structures would have been motivated to look to Metzger's teachings of options for disposing such tensioning structures along the side wall, and thus it would have been obvious to modify Lin to couple the upper and lower structures of the side wrapping belt to the side walls using two separate plastic strips instead of a common plastic strip such that the structures were disposed at an interval along the side wall. (*Supra*, ¶¶306-310.) Modifying Lin in this way would not alter the presence of the air valve disposed on the side wall for inflation and deflation of the inflatable bed, as explained above.

409. Accordingly, in my opinion, Lin in view of the Catalog and Metzger renders obvious claim 20 of the '633 Patent.

G. Lin in view of the Catalog, Metzger, and Lin '773 Renders Obvious Claims 12-14 and 16 of the '633 Patent

410. In my opinion, Lin in view of the Catalog, Metzger, and Lin '773 renders obvious claims 12-14 and 16 of the '633 Patent.

1. Claim 12

a. The inflatable bed according to claim 1,

411. As discussed above, in my opinion Lin in view of the Catalog and Metzger renders obvious all of the limitations of claim 1. (*Supra* §X.F.1.)

b. wherein said first tensioning structure, said second tensioning structure and said third tensioning structure are all made of thermoplastic plastic sheet.

412. As discussed above, Lin in view of the Catalog and Metzger discloses or suggests this limitation. (*Supra*, §X.F.12.b.) However, if the Board disagrees, this limitation is nonetheless disclosed by Lin '773.

413. As described above, Lin '773 discloses improved tensioning structures that "join two pieces of material that are urged away from one another in use," including sheets comprising a double-layer air mattress. (*Supra*, §IX.D; Ex.1009, 7:9-14, 7:62-8:3.) As shown in annotated Figure 1 below, Lin '773 discloses that its tensioning structures may comprise a "plurality of substantially parallel strands 32" (yellow) captured between two weld strips 31 (red) at the top and bottom of the strands:

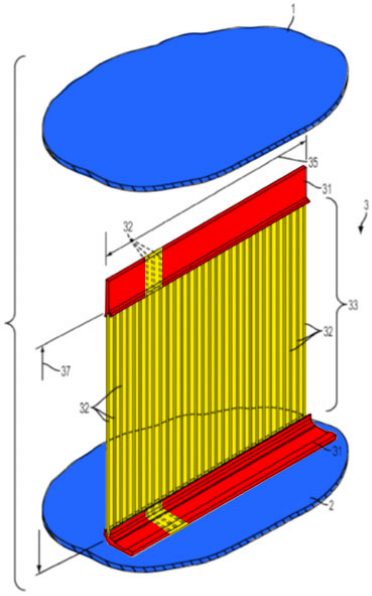

FIG. 1

(Ex. 1009, 7:17-22, 12:22-31, Fig. 1.) The weld strips, in turn, are welded to an "upper material 1" and "lower material 2," such as the top and bottom sheets (blue) of an inflatable bed, as shown above and further in annotated Figure 3 below:

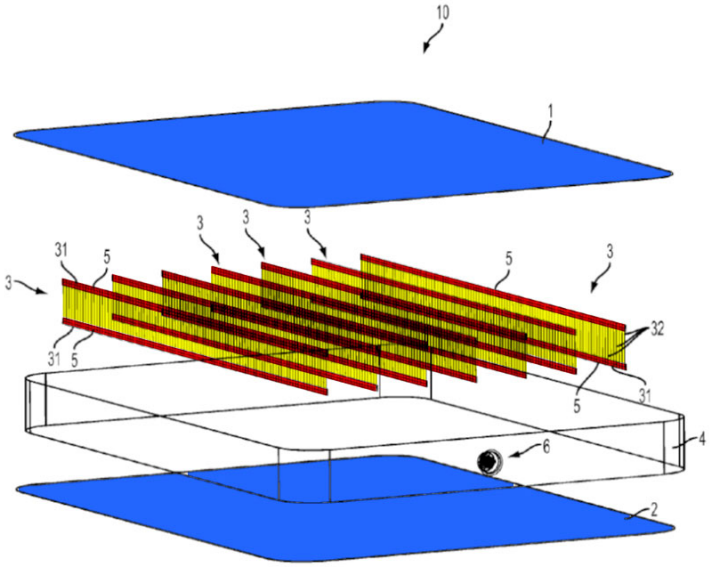

FIG. 3

(*Id.*, 7:22-25, 7:53-66, Fig. 3.)

414. In addition, Lin ’773 discloses that instead of weld strips, the strands can be affixed to a single weld sheet spanning the distance between the outer sheets of the inflatable bed, as shown in annotated Figures 12 and 13 below, or be encapsulated between two weld sheets spanning the distance between the outer sheets, as shown in annotated Figure 14 below:

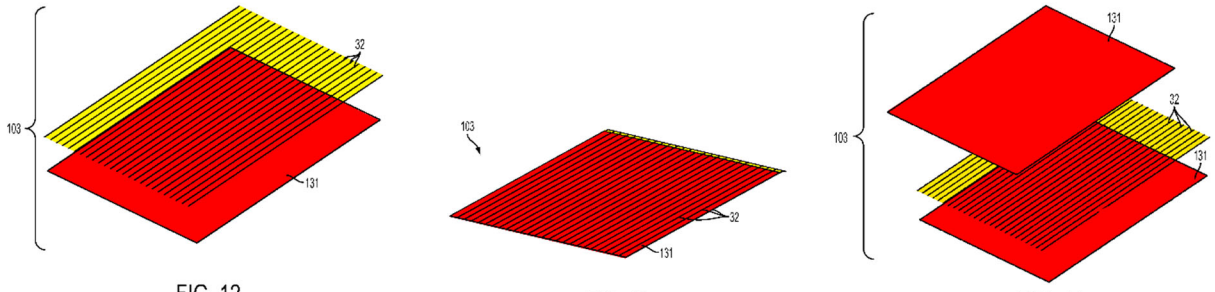

FIG. 12 FIG. 13 FIG. 14

(*Id.*, 12:37-67; Figs. 12-14.)

415. Lin ’773 discloses that its weld strips are “made of PVC,” and that the weld strips may be welded to the top and bottom sheets of the inflatable bed “applying heat to melt and fuse the material of weld strips 31 to the abutting material.” (Ex. 1009, 8:12-20.) PVC is a known thermoplastic plastic sheet, and a POSA would have understood that connecting PVC by “applying heat to melt and fuse the material of weld strips 31 to the abutting material” (Ex. 1009, 8:12-20), would necessarily require that the weld strips be thermoplastic. (Ex. 1046, 5; Ex. 1047, 1; Ex. 1048, Abstract; Ex. 1035, 4.) Lin ’773 further discloses that the weld sheets are also made of plastic. (Ex. 1009, 14:46-52.)

416. A POSA implementing Lin would have been motivated to look to Lin '773's teachings of advantageous tensioning structures for use in inflatable beds. Lin '773 teaches that such tensioning structures could be used to join the top and bottom sheets of a double-layer mattress, including "in combination with one another as required or desired for a particular design." (Ex. 1009, 7:4-14, 7:53-63.) Lin '773 teaches that such tensioning structures could be used to join the top and bottom sheets of a double-layer mattress, or "in any application where a lightweight, packable structure is needed to join two pieces of material that are urged away from one another in use," including "in combination with one another as required or desired for a particular design." (Ex. 1009, 7:4-14, 7:53-63.) Lin '773 further discloses that its tensioning structures serve to maintain the rectangular shape of the inflatable bed by preventing the surfaces of the bed from urging away from each other and thus taking on the shape of a balloon (*id.*, 1:38-52, 7:16-25, 8:47-55)—the same problem in the art to which Lin is addressed (Ex. 1007, ¶¶[0002], [0006], [0013].). Lin '773 further teaches that its tensioning structures provide various advantages over known tensioning structures, including providing high tensile strength while minimizing weight, materials, and costs. (*Supra*, §IX.D; Ex. 1009, 1:20-22 (noting that the disclosed tensioning structures are "light weight and low in cost"); 6:52-56 ("The tensioning structures are lightweight and occupy minimal volume when the device is deflated and packed

away, while also functioning as a strong and durable internal support upon inflation and use of the inflatable device."); 8:67-9:1 ("These regular threads provide substantial tensile strength at a very low cost."); 9:52-55 ("The above-described exemplary arrangement of tensioning structure 3 achieves high tensile strength while promoting light weight and low packed volume of the finished inflatable product."); 10:19-20 ("Because of use of strands 32 rather than PVC sheets, the overall weight of mattress 10 can also be reduced."); 16:17-31 ("In this way, the tensioning structure performs well an internal structure of the inflatable product, while facilitating an overall reduction in weight and deflated/folded volume of the inflatable product."); 18:25-27 ("A tensioning structure in accordance with the present disclosure is also a low-cost option for imparting a desired structure and shape to an inflatable device.").)

417. A POSA would have thus been motivated to employ Lin '773's tensioning structures as the tensioning structures in the air mattress disclosed and suggested by Lin, the Catalog, and Metzger, to achieve the advantages disclosed by Lin '773. A POSA would have a reasonable expectation of success in using Lin '773's design as a tensioning structure, as both Lin and Lin '773 disclose similar materials for their tensioning structures (strands/cables with plastic material on each end), and that their tensioning structures may be welded to the outside surfaces of the inflatable bed via the plastic material on each end. (Ex. 1007,

¶¶[0023], [0028], Fig. 2; Ex. 1009, 7:4-25, 8:4-29, 8:47-55, Figs. 3, 4.) Moreover, use of such materials as tensioning structures was well known before the Priority Date. (*Supra*, §VI.D.)

418. A POSA further would have known that in employing Lin '773's tensioning structures as the tensioning structures in the air mattress disclosed and suggested by Lin, the Catalog, and Metzger, either using two plastic weld strips on either end of the strands (as shown in annotated Figure 1 above) or using one or more plastic weld sheets (as shown in annotated Figures 12-14 above) would be obvious to try. Lin '773 discloses both implementations as options for achieving the objectives of Lin '773—providing high tensile strength to prevent the outer sheets of an inflatable bed from urging away from each other during inflation, while and minimizing weight, materials, and costs (Ex. 1009, 1:20-22, 1:38-52, 6:52-56, 7:16-25, 8:47-9:1; 9:52-55; 10:19-20; 12:37-67, 16:17-31; 18:25-30—and a POSA would thus have a reasonable expectation of success in employing either option.

419. Implementing Lin by using Lin '773's tensioning structures for Lin's drawbelts, side wrapping piece, and suction pieces—whether by using plastic strips or one or more plastic sheets—would result in the first, second, and third tensioning structures all being made of thermoplastic plastic sheet. (Ex. 1036, 13 (defining "made of" as "to have been fashioned, whether by human agency or by

nature, out of (certain materials); to have as its material, constituents, or component parts; to consist or be composed of".)

420. Accordingly, in my opinion, Lin in view of the Catalog, Metzger, and Lin '773 renders obvious claim 12 of the '633 Patent.

2. Claim 13

a. The inflatable bed according to claim 1,

421. As discussed above, in my opinion Lin in view of the Catalog and Metzger renders obvious all of the limitations of claim 1. (*Supra* §X.F.1.)

b. wherein one or more of said first tensioning structure, said second tensioning structure and said third tensioning structure at least partially comprise mesh, laminated plastic sheet or a threads.

422. As discussed above, Lin in view of the Catalog and Metzger discloses or suggests this limitation. (*Supra*, ¶¶388-389.) However, if the Board disagrees that Lin in view of the Catalog and Metzger discloses or suggests that one or more of the first, second, and third tensioning structures at least partially comprise threads, this limitation is nonetheless disclosed by Lin '773.

423. Lin '773 discloses that the strands comprising its tensioning structures "may be made of regular cotton, polyester, nylon ***thread*** made of multiple filaments twisted together, of the type typically used in clothing seams, or any other strand types," and that "[t]hese regular ***threads*** provide substantial tensile strength at a very low cost." (Ex. 1009, 8:64-9:1 (emphasis added).)

424. As described above, a POSA implementing Lin would have been motivated to look to Lin '773's teachings of advantageous tensioning structures for use in inflatable beds, and would have been motivated to employ Lin '773's tensioning structures as the tensioning structures in the air mattress disclosed and suggested by Lin, the Catalog, and Metzger, to achieve the advantages disclosed by Lin '773. (*Supra*, ¶¶416-417.) Implementing Lin by employing Lin '773's tensioning structures for Lin's drawbelts, side wrapping belt, and suction pieces would thus result in the first, second, and third tensioning structures at least partially comprising threads.

425. Accordingly, in my opinion, Lin in view of the Catalog, Metzger, and Lin '773 renders obvious claim 13 of the '633 Patent.

3. Claim 14

a. The inflatable bed according to claim 13,

426. As discussed above, in my opinion Lin in view of the Catalog, Metzger, and Lin '773 renders obvious all of the limitations of claim 13. (*Supra* §X.G.2.)

b. wherein two side surfaces of said mesh or said threads are at least partially coupled integrally with two opposite plastic strips, said mesh and said threads are sandwiched between the two opposite plastic strips.

427. As explained above and as shown in annotated Figure 1 below, Lin ’773 discloses that its strands may be sandwiched between two weld strips (red) at the top and bottom of the strands:

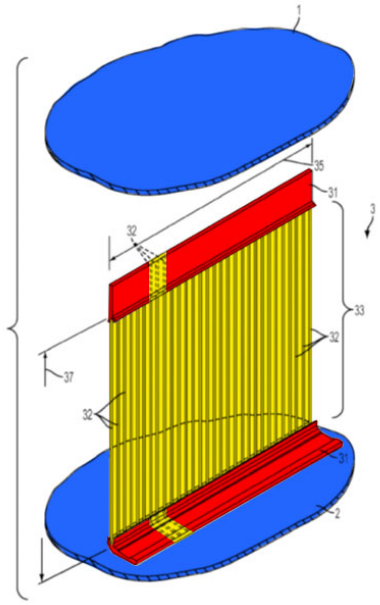

FIG. 1

(Ex. 1009, 7:17-22, 12:22-31, Fig. 1; *supra*, ¶100.) In particular, and as shown in annotated Figures 10 and 11 below, Lin ’773 discloses that “two mutually opposed weld strips” (31, in red) may be disposed on either side of the strands (32, yellow) and “‘trap’ or capture the strands therebetween, thereby contributing to a high-strength coupling interface”:

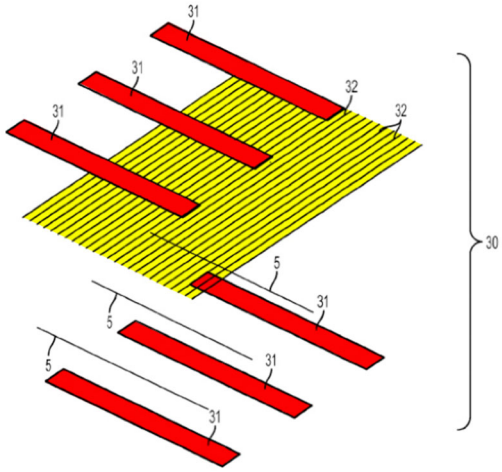

FIG. 10

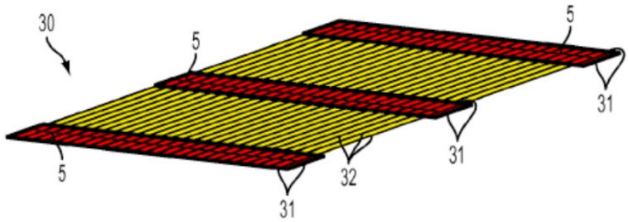

FIG. 11

(*Id.*, 12:22-28, Figs. 10, 11.) Lin '773 discloses that this "dual layer tensioning structure 3 has improved strength and can be welded to" the top and bottom sheets (1 and 2) of the inflatable bed to prevent these sheets from urging away from each other as the bed is inflated, as shown below in annotated Figures 1 and 3 below:

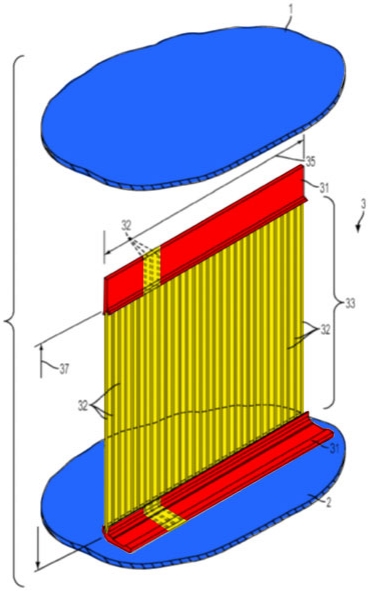

FIG. 1

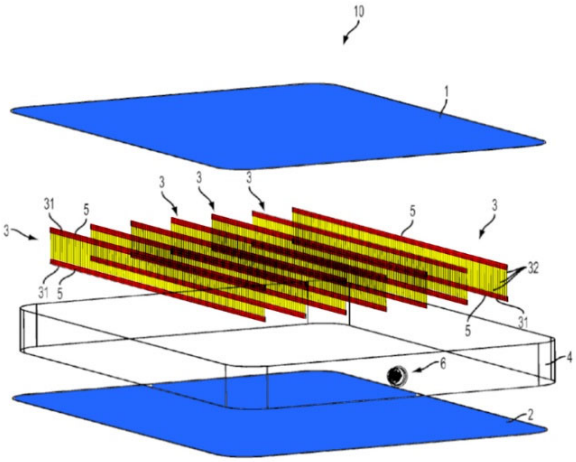

FIG. 3

(*Id.*, 7:16-25, 8:47-55, 12:28-31, Figs. 1, 3.)

428. Lin ’773 further discloses that the weld strips may be made of plastic such as PVC. (Ex. 1009, Abstract, 2:8-26, 8:12-20; Ex. 1046, 5 (defining PVC as “[a] thermoplastic prepared by free-radical polymerization of vinyl chloride in dispersion (emulsion), bulk, or suspension processes”); Ex. 1047, 1 (“Poly(vinyl chloride) (PVC) is one of the major thermoplastics with low production cost, as well as good insulation performance, chemical and fire resistance; it is widely used in different fields.”); Ex. 1048, Abstract (identifying PVC as thermoplastic).) Lin ’773 thus discloses that the threads comprising its strands (Ex. 1009, 8:64-9:1) are sandwiched between two opposite plastic strips.

429. Lin ’773 further discloses that the weld strips may be “fixedly connect[ed]” to the strands by applying “heat or electromagnetic waves,” or by “any suitable welding method.” (*Id.*, 11:11-59.) A POSA would have understood that disposing the strands in between the weld strips and connecting them in this way would result in the strands being coupled integrally with the two opposite weld strips, as the materials of both the strands and weld strips would be fused together.

430. Moreover, the process of coupling threads with plastic strips by “sandwiching” the mesh or threads between the plastic strips so that they are coupled integrally, was well-known before the Priority Date. (*See, e.g.*, Ex. 1015, ¶[0051], Fig. 5A.) Indeed, I understand the Examiner came to this same

conclusion in rejecting this claim during prosecution of the ’633 Patent. (Ex. 1003, 448 (citing WO 2013/0130117 (Ex. 1052).)

431. As discussed above, a POSA would have been motivated to employ Lin ’773’s tensioning structures (including Lin ’773’s threads and weld strips) in the air mattress disclosed and suggested by Lin, the Catalog, and Metzger. (*Supra*, ¶¶416-417.) Accordingly, the combination of Lin, the Catalog, and Lin ’773 discloses or suggests first, second, and third tensioning structures that at least partially comprise threads, with two side surfaces of the threads at least partially coupled integrally with two opposite plastic strips, and the threads are sandwiched between the two opposite plastic strips.

432. Accordingly, in my opinion, Lin in view of the Catalog, Metzger, and Lin ’773 renders obvious claim 14 of the ’633 Patent.

4. Claim 16

a. The inflatable bed according to claim 1,

433. As discussed above, in my opinion Lin in view of the Catalog and Metzger renders obvious all of the limitations of claim 1. (*Supra* §X.F.1.)

b. wherein said first tensioning structure is coupled to said top and bottom sheets by means of high-frequency welding; said second tensioning structure is coupled to said top sheet and said side wall by means of high-frequency welding; and said third tensioning structure is coupled to said bottom sheet and said side wall by means of high-frequency welding.

434. Both Lin and Lin '773 teach coupling their tensioning structures to the top and bottom sheets, to the top sheet and side wall, and to the bottom sheet and side wall, by welding. Specifically, Lin discloses that its drawbelts 3 (first tensioning structure) are coupled to the top and bottom sheets by welding, and that its side wrapping belt (second and third tensioning structures) are coupled to the top sheet and side wall, and to the bottom sheet and side wall, respectively, by welding. (Ex. 1007, ¶¶[0011], [0023].) Lin '773 also discloses that its tensioning structure may be coupled to the sheets of the inflatable bed by welding. (Ex. 1009, 7:16-25, 8:4-29, 8:47-55, Figs. 3, 4.)

435. Lin '773 further discloses that its tensioning structure may be manufactured using "a high-frequency welder." (Ex. 1009, 11:11-38, Fig. 7.) A POSA would have been motivated by Lin '773's teachings of using a high-frequency welder to couple the first, second, and third tensioning structures disclosed and suggested by Lin and the Catalog to the top sheet, bottom sheet, and side walls, respectively, by means of high-frequency welding. A POSA would have known that high-frequency welding was a known method of welding that

provided several advantages, including short weld times, simple technique, consistent performance, and relative low cost, among others. (*See, e.g.*, Ex. 1049, 3-4.) Moreover, the process of coupling tensioning structures by means of high-frequency welding was well-known and long employed in the art before the Priority Date. (*See, e.g.,* Ex. 1026, 4:26-37, 5:39-46; Ex. 1027, ¶¶[0035], [0036], [0041]; Ex. 1034, ¶[0011].) Indeed, I understand the Examiner came to this same conclusion in rejecting this claim during prosecution of the ’633 Patent. (Ex. 1003, 449.)

436. Accordingly, the combination of Lin, the Catalog, Metzger, and Lin ’773 discloses or suggests a first tensioning structure coupled to the top and bottom sheets of an inflatable bed by means of high-frequency welding, a second tensioning structure coupled to the top sheet and side wall by means of high-frequency welding, and a third tensioning structure coupled to the bottom sheet and side wall by means of high-frequency welding.

437. Accordingly, in my opinion, Lin in view of the Catalog, Metzger, and Lin ’773 renders obvious claim 16 of the ’633 Patent.

H. Lin in view of the Catalog, Metzger, Lin ’773, and Liu Renders Obvious Claims 15 and 16 of the ’633 Patent

438. In my opinion, Lin in view of the Catalog, Metzger, Lin ’773, and Liu renders obvious claims 15 and 16 of the ’633 Patent.

1. Claim 15

a. The inflatable bed according to claim 13,

439. As discussed above, in my opinion Lin in view of the Catalog, Metzger, and Lin '773 renders obvious all of the limitations of claim 13. (*Supra* §X.G.2.)

b. wherein two side surfaces of said mesh or said threads are at least partially coupled integrally with an U-shaped plastic strip, said mesh and said threads are sandwiched between the U-shaped plastic strip.

440. As discussed above, Lin '773 discloses that its tensioning structure may comprise strands made of threads sandwiched between plastic weld strips. (*Supra*, ¶¶231, 237, 241-243; Ex. 1009, 7:17-22, 8:12-20, 8:64-9:1, 12:22-31, Figs. 1, 3, 10, 11.) A POSA would have known that weld strips could "'trap' or capture the strands 32 therebetween," as disclosed by Lin '773 (*id*., 12:25-28), by two different means. While two separate weld strips could be used, it was also well known and obvious to use a single weld strip "folded over" the ends of the strands such that the weld strip was U-shaped and the strands were sandwiched between the U-shaped weld strip.

441. For example and as described above, Liu discloses use of tensioning structures "to join two pieces of material that are urged away from one another in use," including sheets comprising a multiple-layer air mattress. (*Supra*, §IX.D; Ex.1015, ¶¶[00037]-[0040], [0063].) As shown in annotated Figures 1 and 2

below, Liu discloses that its tensioning structures may comprise two plastic weld strips (red) and a panel "made of a material having fibers that form an open cell mesh construction where the cells may be shaped, cut, or otherwise formed into various geometrical shapes" (yellow):

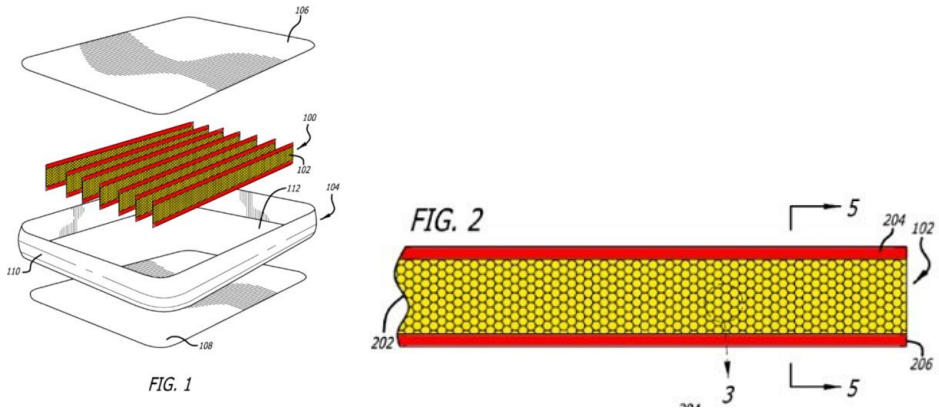

(Ex. 1015, ¶¶[0037], [0040]; Figs. 1, 2.) Liu further discloses that the fibers of the mesh construction "may be constructed by knotting or weaving together strands of materials such as twine, wire, string, or ***threads***." (Ex. 1015, ¶[0046] (emphasis added).) As shown below in annotated Figure 5B, Liu further discloses that "a single weld strip 502" (red) "may be used and folded about the lateral ends of the panel 202" (yellow) "such that one end of the weld strip is affixed to a bottom surface of the panel 202 and the opposite end of the strip is affixed to a top surface of the panel 202":

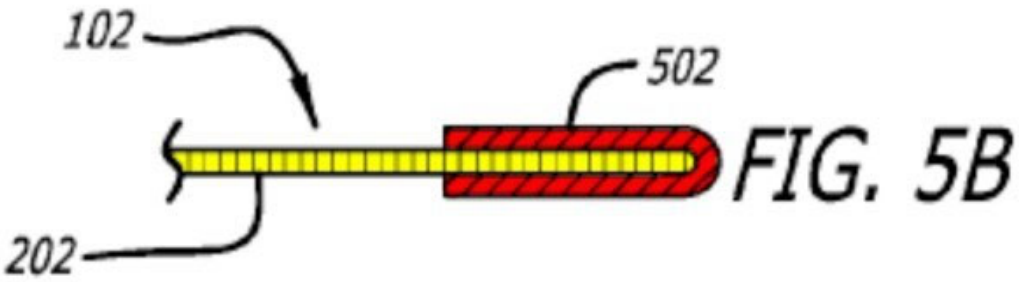

(Ex. 1015, ¶[0052], Fig. 5B.)

442. Liu further discloses that "[t]he weld strips 204 and 206 may be affixed to the panel 202 using suitable coupling techniques, such as radio-frequency (RF) welding, hot-air coupling (e.g., melting or welding), adhering (e.g., gluing) or other means known in the art." (*Id.*, ¶[0051].) A POSA would have understood that folding the weld strip about the lateral ends of the mesh panel and then coupling it by radio-frequency welding or melting would result in the mesh being coupled integrally with the U-shaped weld strip, as the materials of both the panel and weld strip would be fused or integrated together.

443. Liu teaches that such tensioning structures could be used to join the top and bottom sheets of a multiple-layer mattress, or "in any application where a lightweight, packable structure is needed to join two pieces of material that are urged away from one another in use," including "in combination with one another as required or desired for a particular design." (Ex. 1015, ¶¶[0035]-[0040], [0063].) Liu is directed to the same problems as Lin and Lin '773 (preventing deforming of large-height inflatable beds), and, like Lin '773, discloses

advantageous tensioning structures comprising two weld strips to achieve this objective. (Ex. 1007, ¶¶[0002], [0006], [0013]; Ex. 1009, 1:38-52, 7:16-25, 8:47-55; Ex.1015, ¶¶[0009]-[0010], [00037]-[0041], [0054], [0063].) Liu further teaches that its tensioning structures provide various advantages over known tensioning structures, including facilitating the free flow of air from one portion of the air chamber to the next while being lightweight, "simple in structure, easy to manufacture, durable, and low in production cost." (Ex. 1015, ¶¶ [0054], [0061].)

444. A POSA implementing Lin '773's tensioning structures in the air mattress disclosed and suggested by Lin, the Catalog, and Metzger (*supra*, ¶¶416-417) thus would have been motivated to look to Liu's teachings regarding advantageous methods of attaching plastic weld strips to threads. A POSA would have been motivated to try either of the two principal ways to sandwich threads between weld strips—that is, either using two separate weld strips (as taught by Lin '773 and Liu) or a single weld strip folded over the ends of the threads (as taught by Liu). A POSA would have known that these two options constituted a finite number of identified, predictable solutions for sandwiching threads between weld strips in a tensioning structure, and would have a reasonable expectation of success in trying either option. A POSA would have known that both options would yield a tensioning structure with threads effectively sandwiched between plastic. A POSA thus would have known that either solution would be obvious to

try. Indeed, the process of coupling mesh or threads with a plastic strip by "sandwiching" the mesh or threads between a U-shaped plastic strip so that they are coupled integrally, was well known before the Priority Date. I understand the Examiner came to this same conclusion in rejecting this claim during prosecution of the '633 Patent. (Ex. 1003, 448.)

445. Accordingly, the combination of Lin, the Catalog, Metzger, Lin '773, and Liu disclose or suggest first, second, and third tensioning structures that at least partially comprise threads, with two side surfaces of the threads at least partially coupled integrally with a U-shaped plastic strip, and the threads are sandwiched between the U-shaped plastic strip.

446. Accordingly, in my opinion, Lin in view of the Catalog, Metzger, Lin '773, and Liu renders obvious claim 15 of the '633 Patent.

2. Claim 16

a. The inflatable bed according to claim 1,

447. As discussed above, in my opinion Lin in view of the Catalog and Metzger renders obvious all of the limitations of claim 1. (*Supra* §X.F.1.)

b. wherein said first tensioning structure is coupled to said top and bottom sheets by means of high-frequency welding; said second tensioning structure is coupled to said top sheet and said side wall by means of high-frequency welding; and said third tensioning structure is coupled to said bottom sheet and said side wall by means of high-frequency welding.

448. As discussed above, a POSA would have been motivated by Lin '773's teachings of using a high-frequency welder to couple the first, second, and third tensioning structures disclosed and suggested by Lin and the Catalog to the top sheet, bottom sheet, and side walls, respectively, by means of high-frequency welding. (*Supra*, ¶¶434-436.) However, as explained below, to the extent a POSA would not have understood Lin '773 to teach coupling tensioning structures to the top sheet, bottom sheet, and side walls by means of high-frequency welding, a POSA would have been motivated by Liu's teachings to employ high-frequency welding to couple these materials.

449. Liu discloses that its tensioning structures may be coupled to sheets of an inflatable mattress (such as the top and bottom sheets) by "RF welding, hot-air coupling, adhering, or other means known in the art." (Ex. 1015, ¶[0054].) A POSA would have understood that RF (radio frequency) welding constitutes high-frequency welding. (*See, e.g.*, Ex. 1046, 4 ("Radio frequency (RF) welding, also called high frequency welding, HF welding or dielectric welding, uses high frequency (normally 27.12 MHz) electro-magnetic energy to generate heat in

materials by virtue of their electrical properties….”); Ex. 1049, 17 (“Dielectric welding is also known as high frequency (HF) welding and radio frequency (RF) heating or welding”); Ex. 1050, 3 (“One other method worth a mention is radio frequency welding (RF). Materials are fused together using high frequency energy to cause molecules to oscillate.”).)

450. Liu is directed to the same problems as Lin and Lin ’773 (preventing deforming of large-height inflatable beds), and, like Lin ’773, discloses advantageous tensioning structures comprising two weld strips to achieve this objective. (Ex. 1007, ¶¶[0002], [0006], [0013]; Ex. 1009, 1:38-52, 7:16-25, 8:47-55; Ex.1015, ¶¶[0009]-[0010], [00037]-[0041], [0054], [0063].) A POSA thus would have been motivated to look to Liu’s teachings regarding advantageous attachment methods for coupling tensioning structures comprising weld strips (as disclosed by Lin ’773) to the outer surfaces of an inflatable bed.

451. Thus, to the extent a POSA would not have understood Lin ’773 to teach coupling tensioning structures to the top sheet, bottom sheet, and side walls by means of high-frequency welding, a POSA would have been motivated by Liu’s teachings to employ high-frequency welding to couple these materials. A POSA would have known that high-frequency welding was a known method of welding that provided several advantages, including short weld times, simple technique, consistent performance, and relative low cost, among others. (*See, e.g.*, Ex. 1049,

3-4.) Moreover, the process of coupling tensioning structures by means of high-frequency welding was well-known and long employed in the art before the Priority Date. (*See, e.g.,* Ex. 1026, 4:26-37, 5:39-46; Ex. 1027, ¶¶[0035], [0036], [0041]; Ex. 1034, ¶[0011].) Indeed, I understand the Examiner came to this same conclusion in rejecting this claim during prosecution of the ’633 Patent. (Ex. 1003, 449.)

452. Accordingly, the combination of Lin, the Catalog, Metzger, Lin ’773, and Liu disclose or suggest a first tensioning structure coupled to the top and bottom sheets of an inflatable bed by means of high-frequency welding, a second tensioning structure coupled to the top sheet and side wall by means of high-frequency welding, and a third tensioning structure coupled to the bottom sheet and side wall by means of high-frequency welding.

453. Accordingly, in my opinion, Lin in view of the Catalog, Metzger, Lin ’773, and Liu renders obvious claim 16 of the ’633 Patent.

I. Lin in view of the Catalog, Metzger, and Chung Renders Obvious Claim 20 of the ’633 Patent

454. In my opinion, Lin in view of the Catalog, Metzger, and Chung renders obvious claim 20 of the ’633 Patent.

1. Claim 20

a. The inflatable bed according to claim 1,

As discussed above, Lin in view of the Catalog and Metzger renders obvious the elements of claim 1. (*Supra* §X.F.1.)

b. wherein said inflatable bed further comprises an air valve, which is disposed on said side wall for the inflation and deflation of said inflatable bed.

455. As explained above, in my opinion Lin in view of the Catalog and Metzger renders obvious claim 20 of the '633 Patent. (*Supra*, §X.F.16.) However, if the Board disagrees that the Catalog discloses an air valve as recited in this limitation, this feature is nonetheless disclosed by Chung, and it would have been obvious to a POSA to look to Chung for implementing the Catalog's teaching of disposing a built-in air pump on the side wall of an inflatable bed.

456. Chung discloses various air pump assemblies that are built into inflatable beds, whereby the air pump assemblies include air valves. (*See, e.g.*, Ex. 1012, 1:33-2:3, 5:1-39.) For example, as show in the annotated Figure 4A below, Chung discloses a built-in air pump assembly (purple) disposed on a side wall of an inflatable bed, for inflating two separate components of the inflatable bed—a "mattress pad 41" and a "back support 42":

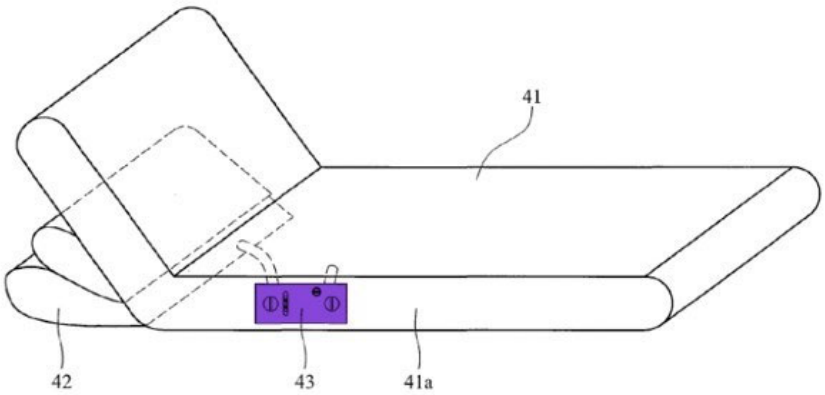

FIG. 4A

(*Id.*, 5:1-6, Fig. 4A.)

457. As shown in annotated Figure 4C below, Chung discloses that the air pump assembly comprises two valves (light purple)—one (436, on left) for inflation and deflation of the back support, and one (436′, on right) for inflation and deflation of the mattress pad:

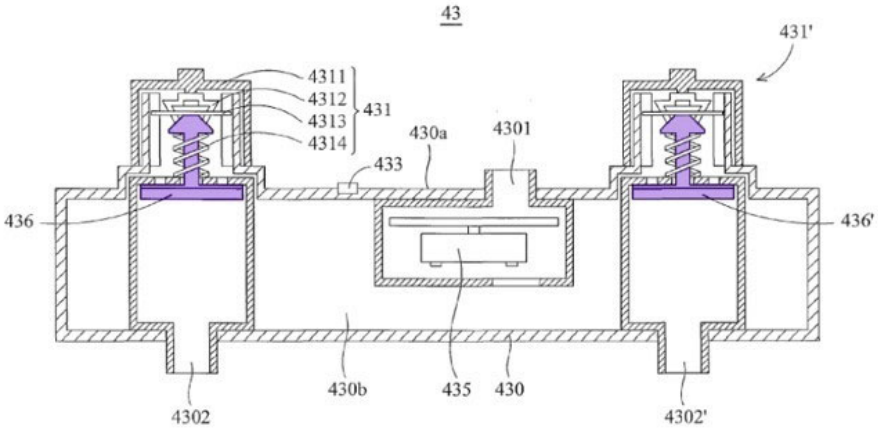

FIG. 4C

(*Id.*, 5:7-20, Fig. 4C.) Both valves operate in the same way to inflate and deflate the back support and mattress pad, respectively. (*Id.*, 5:7-39.)

458. Chung discloses that the two valves 436 and 436′ are opened or closed by twisting valve switches 431 or 431′, respectively, which are shown below in annotated Figure 4B:

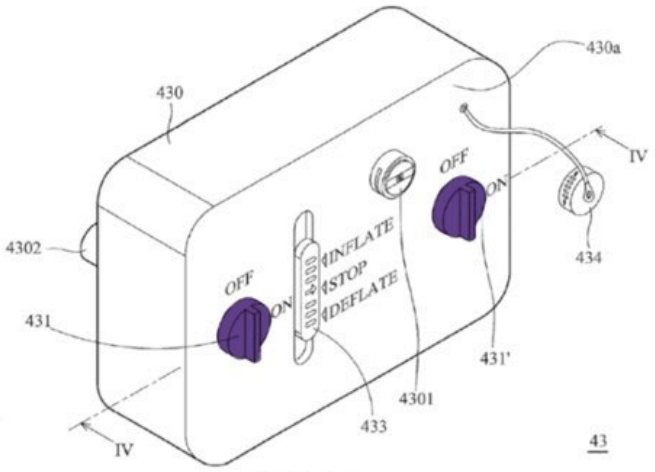

FIG. 4B

(*Id.*, 5:17-39, Fig. 4C.) As shown in annotated Figures 4D-4F below, twisting valve switch 431, for example, causes a cam element 4312 to depress a bar 4313, which compresses a spring 4314 to open the valve 436:

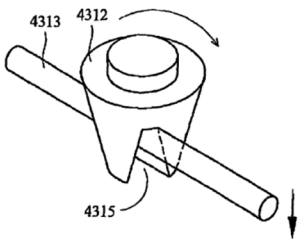

FIG. 4D

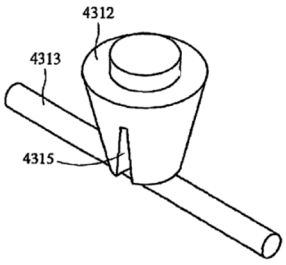

FIG. 4E

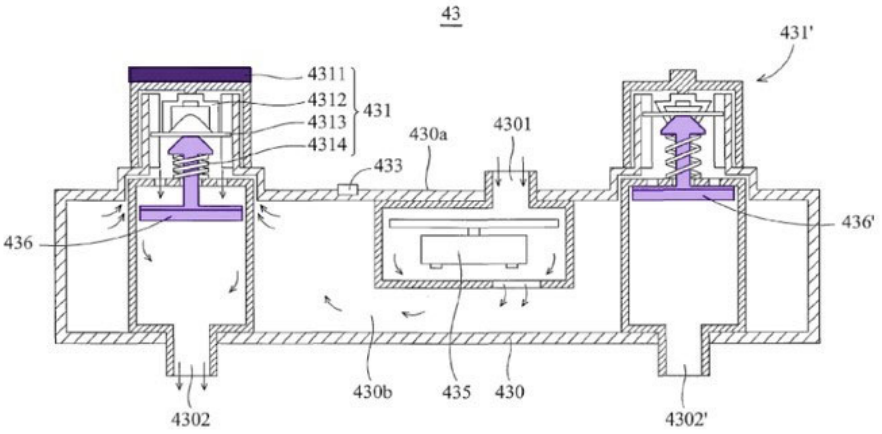

FIG. 4F

(*Id.*, 5:17-39, Figs. 4D-4F.) Outside air is thereby pumped into the back support through the air intake 4301 and air outlet 4302, as indicated by the arrows in the annotated Figure 4F above. (*Id.*, 5:34-37.) Chung discloses that the air valve could also be used for deflation of the inflatable bed. (*Id.*, 5:40-6:12, Figs. 4B, 4H, 4J, 4L, 4N.)

459. Chung thus discloses a built-in air pump disposed on the side wall of an inflatable bed, and that the air pump includes an air valve for inflation and deflation of the inflatable bed. (*Id.*, 5:1-6:12, Figs. 4A-4N.) A POSA would have therefore known before the Priority Date that built-in air pumps (which, as described above, were also well known in the art before the Priority Date, *supra*, ¶36) included air valves for inflation and deflation as part of the pump. A POSA further would have known that such air pumps were advantageous because they eliminated the need for providing an air valve(s) separate from the pump. It was

well known before the Priority Date that because a separate air valve constitutes another opening in the material of the inflatable bed, which may lead to leakage of air from the air chamber over time, eliminating the need to dispose a separate air valve on the inflatable bed would be advantageous because it avoids this potential for leakage. In addition, it was known that eliminating the need to dispose a separate air valve on the inflatable bed would simplify the manufacturing process by avoiding the need to manufacture a separate air valve, create an aperture for the air valve in the wall(s) of the bed, or incorporate the air valve into the bed.

460. Accordingly, to the extent a POSA would not understand the pump disclosed by the Catalog to include an air valve, a POSA would have been motivated to use a pump such as disclosed in Chung to provide an air valve as part of the pump, thereby avoiding the need to dispose a separate air valve on the inflatable bed. Use of such a pump would have been a simple substitution of known built-in air pumps with a reasonable expectation of success, and would have been well within a POSA's technical grasp. (*Supra*, ¶286.)

461. Accordingly, in my opinion, Lin in view of the Catalog, Metzger, and Chung renders obvious claim 20 of the '633 Patent.

XI. CONCLUSION

462. In signing this declaration, I recognize that the declaration may be filed as evidence in a contested case before the Patent Trial and Appeal Board of the United States Patent and Trademark Office. I also recognize that I may be subject to cross-examination in the case and that cross-examination will take place within the United States. If cross-examination is required of me, I will cooperate to the best of my ability to appear for cross-examination within the United States during the time allotted for cross-examination.

463. I declare that all statements made herein of my own knowledge are true and that all statements made on information and belief are believed to be true; and further that these statements were made with the knowledge that willful false statements and the like are punishable by fine or imprisonment, or both, under Section 1001 of Title 18 of the United States Code.

464. I declare under penalty of perjury that the foregoing is true and correct.

Executed on: 1/19/2022

Bernhard Kuchel

APPENDIX A

Bernhard (Ben) Kuchel

1165 Old Chimney Lane
King, North Carolina 27021

Home: (336) 994-2050
Cell: (336) 561-1838 blkuchel@embarqmail.com

SUMMARY

Creative, R&D Engineering Executive with extensive expertise in process, product, and machine design. Uniquely able to combine keen customer knowledge with advanced technical expertise to find cost-efficient ways to create new products and reinvent existing ones. Strong skills in the areas of strategic and tactical planning, process engineering, project management, and vendor relations. Effective at designing innovative solutions and building creative teams to increase ROI and broaden product line. Areas of accomplishment:

- New Product and Path to Market Development
- Product, Machine, and Process Innovation
- International Project Management
- Multiple Patent Holder and Expertise in Patent Applications and Litigation
- Strong Leadership and Team Building Skills
- Solid Communication Ability

PROFESSIONAL EXPERIENCE

PRODUCT DESIGN CONSULTANT, King, NC **2008 – Present**

New product development with focus on the bedding industry and supply base.

Principal

- Provide bedding industry consultation to institutional investment firms and consumer advocate groups.
- Acquisition subject matter expert for Bain Capital, LLC regarding Simmons Bedding.
- Concept, IP, and path-to-market analysis for independent inventors.
- Optimize and redesign of a 3-tier bedding product line resulting in 12% cost improvement. Process and machine impact analysis performed.
- Facilitate non-traditional suppliers entering the furniture and bedding markets through industry, process, and testing knowledge.
- Subject matter expert on multiple published articles in *Consumer Reports* (Consumers Union).
- Forge strategic manufacturing partners to facilitate new bedding brand introductions nationwide.

SEALY INCORPORATED, Trinity, NC **2005 – 2008**

$1.7 Billion Worldwide Bedding Manufacturer.

Director of Advanced Technology and Product Development

Set strategy for department of 8 tasked with translating market needs into commercially viable products.

- Instrumental in redesigning and re-launching all 7 of the Company's bedding brands over 2 years in a new regulatory environment.
- Led collaboration with a Chinese supplier to enter a new air bed product category within 9 months.
- Delivered patent pending product designs aimed at new and expanded categories.
- Developed university and non-traditional design partnerships in several key areas.
- Challenged the Company's design process through three "skunkworks" projects resulting in 8 new product concepts.
- Initiated industrial design focus and consumer psychographic-based research into product design.

- Restructured department to improve communication, foster increased creativity, and respond to rapidly changing competitive market.

SIMMONS COMPANY, Norcross, GA **1995 – 2004**
$850 Million Worldwide Bedding Manufacturer.
Director of Process Development
Led centralized R&D group structured to define and solve engineering, process, and product problems for global manufacturing (17 domestic and 35 international locations). Projects encompassed design concepts through implementation and included budgeting, financial analysis and justification, and securing patents.

- Engineered solutions shortening product cycle time, optimizing product costs, and supporting supply chain management to produce marketable easily manufactured products.
- Instituted standardized manufacturing processes across the network resulting in significant increases in quality and improvements in productivity.
- Implemented a computer driven maintenance system in 17 facilities achieving a $1.8MM average annual savings.
- Developed industry leading product features resulting in 21% sales increase in first year.
- Directly influenced the defining of specifications for over $50MM annually in raw materials.
- Reduced raw material usage through design optimization and vendor selection in 4 key areas resulting in cost improvements up to 33%.
- Obtained and defended patents on over a dozen machinery, process, and product innovations.
- Consistently completed projects within or under budget while generating $2MM to $4MM annual manufacturing cost savings.
- Developed in-house continuing education for manufacturing personnel.
- Developed software tools to expedite capacity and capital equipment modeling for all 17 North America facilities.

THE TORRINGTON COMPANY, Norcross, GA **1993 – 1995**
$1.5 Billion Worldwide Bearing and Automotive Component Manufacturer. A Division of Ingersoll-Rand Company.
Program Manager 1994 – 1995
Managed cross-functional teams to implement new manufacturing technologies in production facilities worldwide.

- Explored and procured manufacturing technology ensuring on-time delivery of new product production.
- Interfaced with Product Engineers, Manufacturing Engineers, Purchasing, Business Managers, and OEM's to define program goals, new products, and machinery.

Senior Design Group Leader 1993 – 1994
Managed design group responsible for solving plant problems by designing specialized machinery.

- Defined and evaluated the group's goals, performance, and structure.

THE GOODYEAR TIRE & RUBBER COMPANY, Akron, OH **1986 – 1993**
$12 Billion Worldwide Tire and Rubber Component Manufacturer.
Machine Design Staff Engineer 1991 – 1993
Led engineering groups in the design of automated performance and race tire machinery.

- Received patent and trade secret awards for innovative work on new machinery and processes.
- Designed innovative race tire lettering system in use to this day.
- Interacted with management and production; determined requirements and needs of new designs.
- Worked with project teams, production plants, machine shops, and electrical engineers to

determine solutions and implement designs.

Machine Design Engineer 1986 – 1991

Designed automatic passenger tire machinery and subsystems from conception to installation.

- Selected electric, pneumatic, hydraulic, and power transmission components for use in automatic machinery.
- Designed linkages, guidance systems, knives, and positioning devices.
- Active in the development of department standards and systems; leader of department system related workgroups.

EDUCATION

Bachelor of Mechanical Engineering with High Honors
The Georgia Institute of Technology, Atlanta, Georgia 1986

EXPERT WITNESS AND LITIGATION SUPPORT EXPERIENCE

Summary: Patent and personal injury litigation related to the bedding and inflatable pool and spa industries. Experience includes prior art analysis, infringement analysis, invalidity analysis, expert reports, IPR and PGR declarations, claim constructions, risk analysis, lawsuit preparations, court testimony, and depositions. Intellectual property expert while employed by both Simmons and Sealy.

FAEGRE BAKER DANIELS LLP, Denver, CO **2018 - 2019**

Case: Intex Recreation Corporation v. Team Worldwide Corporation, IPR2019-00243, Patent Trial and Appeal Board

• Expert Witness involving invalidity of a patent related to a pump design for inflatable objects.

Case: Intex Recreation Corporation v. Team Worldwide Corporation, IPR2019-00244, Patent Trial and Appeal Board

• Expert Witness involving invalidity of a patent related to a pump design for inflatable objects.

Case: Intex Recreation Corporation v. Team Worldwide Corporation, PGR2019-00015, Patent Trial and Appeal Board

• Expert Witness involving invalidity of a patent related to a pump design for inflatable objects.

Case: Intex Recreation Corporation v. Team Worldwide Corporation, IPR2019-00245, Patent Trial and Appeal Board

• Expert Witness involving invalidity of a patent related to a pump design for inflatable objects.

FARELLA BRAUN + MARTEL LLP, San Francisco, CA **2018 – 2019**

Case: Level Sleep, LLC v. Sleep Number Corporation et al., No. 2:18-CV-00119 RWS, Eastern District of Texas

- Expert Witness involving infringement litigation of two patents related to bed designs.

MATTIACCI LAW LLC, Moorestown, NJ **2017 – 2019**

Case: Hines v. Tempur-Pedic et al., No. 1:18-CV-01021-RMB-AMD, District of New Jersey

- Expert Witness involving personal injury sustained from a bedding product design.

DUNLAP CODDING P.C., Chicago, IL **2017 – Present**

Case: Leach et al. v. Pharmedoc, Inc., No. 16-CV-1034-SLP, Western District of Oklahoma

- Expert Witness involving patent infringement litigation related to pillow product designs.

GIBSON, DUNN & CRUTCHER LLP, Dallas, TX **2017 – 2018**
Case: Serta Simmons Bedding, LLC and Dreamwell, LTD. v. Casper Sleep, Inc., No. 17-CV-7468, Southern District of New York
- Expert Witness involving invalidity and Preliminary Injunction for three patents related to foam bed design.

FAEGRE BAKER DANIELS LLP, Indianapolis, IN **2016 - Present**
Case: Team Worlwide Corporation v. Wal-Mart Stores, Inc., No. 2:17-CV-00235, Eastern District of Texas
- Consultant involving infringement of three patents related to pump design for an inflatable air bed.

Case: Bestway (USA), Inc. v. Intex Marketing LTD., IPR2017-01655, Patent Trial and Appeal Board
- Expert Witness involving invalidity of a patent related to inflatable pool and spa design.

Case: Bestway (USA), Inc. v. Intex Marketing LTD., IPR2017-01397, Patent Trial and Appeal Board
- Expert Witness involving invalidity of a patent related to a method of manufacturing internal tensioning structures for use in inflatable products.

Case: Bestway (USA), Inc. v. Intex Marketing LTD., IPR2017-01396, Patent Trial and Appeal Board
- Expert Witness involving invalidity of a patent related to a method of inflatable bedding manufacturing.

Case: Bestway (USA), Inc. v. Intex Marketing LTD., IPR2017-00848, Patent Trial and Appeal Board
- Expert Witness involving invalidity of a patent related to inflatable bedding design.

Case: Bestway (USA), Inc. v. Intex Marketing LTD., PGR2017-00003, Patent Trial and Appeal Board
- Expert Witness involving invalidity of a patent related to inflatable pool and spa design.

ARENT FOX LLP, Washington, DC **2015 - 2016**
Case: Select Comfort Corporation v. Tempur Sealy International, Inc., No. 0:13-CV-02451-DWF-SER, District of Minnesota
- Expert Witness involving false advertising claims related to bedding design and performance.

K & L GATES LLP, Dallas, TX **2014 - 2017**
Case: Select Comfort Corporation v. Tempur Sealy International, Inc., No. 0:14-CV-00245-JNE-JSM, District of Minnesota
- Expert Witness involving infringement and invalidity of a patent related to pump design for an inflatable air bed.

Case: Select Comfort Corporation v. Tempur Sealy International, Inc., IPR2014-01419, Patent Trial and Appeal Board
- Expert Witness involving invalidity of a patent related to pump design for an inflatable air bed.

MICHAEL BEST & FRIEDRICH LLP, Milwaukee, WI **2012 - 2013**
Case: Leggett & Platt, Inc. v. Simmons Bedding Company, No. 3:11-CV-5041-RED, Western District of Missouri

- Expert Witness involving infringement and invalidity of a patent related to bedding design.

TROUTMAN SANDERS LLP, Atlanta, GA **2005 - 2007**
Case: Atlanta Attachment Company v. Leggett & Platt, Inc., No. 1:05-CV-1071, Northern District of Georgia

- Expert Witness involving infringement of two patents related to bedding manufacture and product design.

PATENTS / HONORS / SOCIETIES / ORGANIZATIONS

Patents: 5102490, 5746877, 5749133, 6718726, 6931685, 7168117, 7418753, 7788746, 7814594, 7832040
Gamma Beta Pi Honor Society
Pi Tau Sigma Honor Society
Society of Automotive Engineers, VP GT Chapter
Tau Beta Pi Honor Society
EIT Certificate
Simmons Owner of the Month Award
Riverwood Therapeutic Riding Center - Volunteer

PROFESSIONAL DEVELOPMENT

Finance and Accounting for Non-Financial Managers – Georgia Institute of Technology
Project Management – North Carolina State University
LeanSigma Principles - TBM
New Product Development – Georgia Institute of Technology
Bench Marking Maintenance Management – Auburn University
Practical Machining Principles – IAMS
First Things First – S. Covey
Activity Based Cost Management – Torrington
Motor and Drive Seminar – Allen-Bradley
CADAM I and II – Lansing Community College
Professional Development Phase A through E – Kent State University
Goodyear Training: Leadership Development, Management Workshop, Finance