US007346950B2

(12) **United States Patent**
Chung

(10) **Patent No.: US 7,346,950 B2**
(45) **Date of Patent: Mar. 25, 2008**

(54) **INFLATABLE PRODUCT PROVIDED WITH ELECTRIC AIR PUMP**

(75) Inventor: **Wang Cheng Chung**, Taipei (TW)

(73) Assignee: **Team Worldwide Corporation**, Taipei (TW)

(*) Notice: Subject to any disclaimer, the term of this patent is extended or adjusted under 35 U.S.C. 154(b) by 97 days.

(21) Appl. No.: **10/696,813**

(22) Filed: **Oct. 30, 2003**

(65) **Prior Publication Data**

US 2004/0123395 A1 Jul. 1, 2004

Related U.S. Application Data

(62) Division of application No. 09/886,030, filed on Jun. 22, 2001.

(51) **Int. Cl.**
A47C 27/08 (2006.01)

(52) **U.S. Cl.** **5/706**; 5/708; 5/713

(58) **Field of Classification Search** 5/706, 5/708, 713; 417/238, 239, 360, 423.14, 423.15
See application file for complete search history.

(56) **References Cited**

U.S. PATENT DOCUMENTS

10,139	A		10/1853	Scott	
388,037	A	*	8/1888	Hargin	5/708
3,303,518	A	*	2/1967	Ingram	5/710
3,606,623	A		9/1971	Aymar	
3,781,928	A		1/1974	Swallert	
4,306,322	A	*	12/1981	Young et al.	5/710
4,390,226	A		6/1983	Hohn	
4,435,864	A	*	3/1984	Callaway	5/706
4,619,481	A	*	10/1986	Grudzinskas	297/284.1
4,766,628	A		8/1988	Walker	
4,862,533	A		9/1989	Adams, III	
4,890,344	A	*	1/1990	Walker	5/713
4,935,968	A		6/1990	Hunt et al.	
4,941,221	A		7/1990	Kanzier	
5,020,517	A		6/1991	Foster et al.	
5,068,933	A		12/1991	Sexton	
5,127,808	A		7/1992	Nichols et al.	
5,249,319	A	*	10/1993	Higgs	5/714
5,267,363	A		12/1993	Chaffee	
5,279,018	A		1/1994	Glenn, III	
5,297,545	A		3/1994	Infante	
5,345,630	A		9/1994	Healy	

(Continued)

FOREIGN PATENT DOCUMENTS

CH 678266 A5 8/1991

(Continued)

OTHER PUBLICATIONS

Instruction sheet for "Insta-Bed", Sep. 2000, USA.

Primary Examiner—James M. Hewitt
(74) *Attorney, Agent, or Firm*—Quintero Law Office

(57) **ABSTRACT**

An inflatable product includes a first chamber, a pack, and a fan and motor received in the pack. The pack has an air intake connected to the outside of the first chamber and a first air outlet connected to the inside of the first chamber. A first valve for opening and closing the first air outlet is received in the pack. Air is pumped by the fan and motor from the outside of the first chamber through the air intake and the first valve and then into the first chamber from the first air outlet.

14 Claims, 33 Drawing Sheets

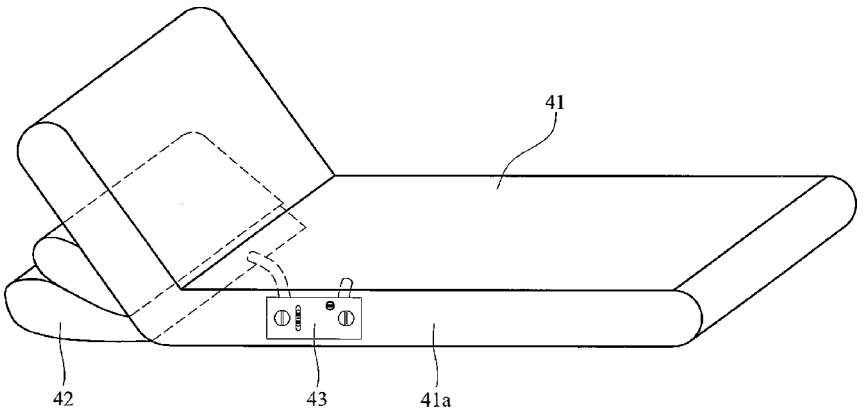

U.S. PATENT DOCUMENTS

5,367,726 A * 11/1994 Chaffee 5/706
5,397,950 A 3/1995 Norbury, Jr. et al.
5,503,618 A 4/1996 Rey
5,522,337 A 6/1996 Meyers et al.
5,542,136 A 8/1996 Tappel
5,605,482 A 2/1997 Choy
5,606,756 A 3/1997 Price
5,624,242 A * 4/1997 Wu 417/238
5,687,438 A 11/1997 Biggie et al.
5,711,041 A 1/1998 Chen
5,794,289 A 8/1998 Wortman et al.
5,806,115 A 9/1998 Brown
5,848,875 A 12/1998 San-Jou
5,890,882 A 4/1999 Feldman
5,931,207 A 8/1999 Gianino
5,966,762 A 10/1999 Wu
6,098,221 A * 8/2000 Kloppenborg 5/706
6,098,245 A * 8/2000 Satterfield et al. 15/412
6,119,292 A 9/2000 Haas
6,158,978 A * 12/2000 Norbury, Jr. 417/350
6,237,653 B1 5/2001 Chaffee
6,287,095 B1 * 9/2001 Saputo et al. 417/472
6,298,511 B1 10/2001 Collymore
6,315,526 B1 11/2001 Jones
6,431,845 B1 * 8/2002 Thomas et al. 417/571
6,457,192 B2 * 10/2002 Choi et al. 5/114
6,485,276 B2 * 11/2002 Yang 417/423.14
6,499,166 B1 12/2002 Jones
6,591,437 B1 * 7/2003 Phillips 5/713
6,609,260 B2 8/2003 Hand et al.
6,722,306 B1 4/2004 Wang
6,793,469 B2 9/2004 Chung
7,039,972 B2 5/2006 Chaffee
2001/0044969 A1 * 11/2001 Chaffee 5/655.3
2004/0073999 A1 * 4/2004 Fruge 5/12.1

FOREIGN PATENT DOCUMENTS

DE 297 21 150 U1 3/1998
JP JP 6-133832 5/1994
WO WO/8809140 12/1988

* cited by examiner

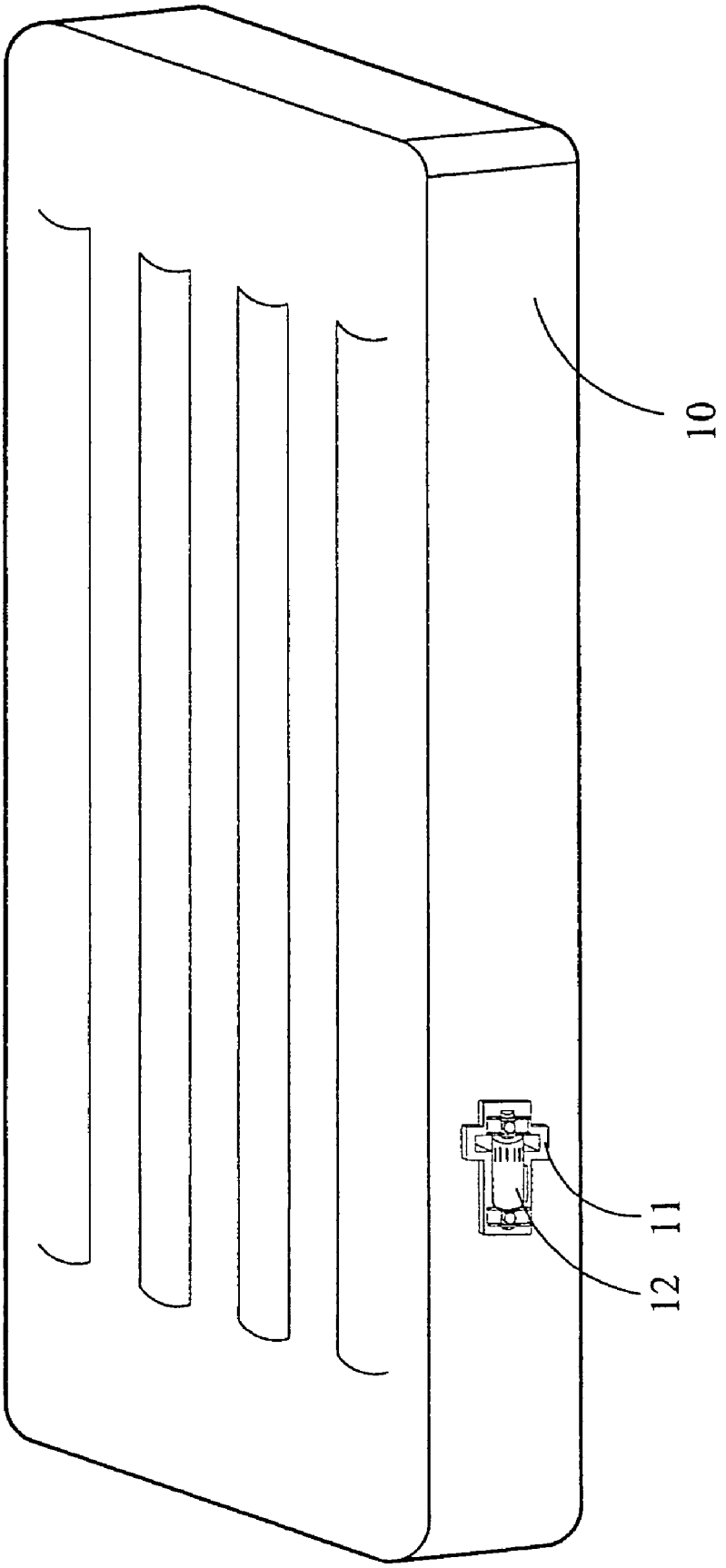

FIG. 1A

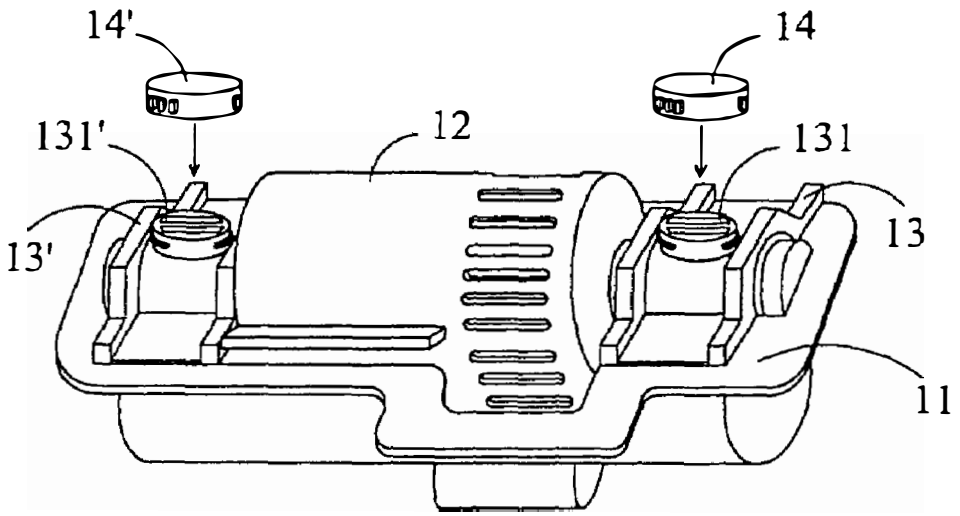

FIG. 1B

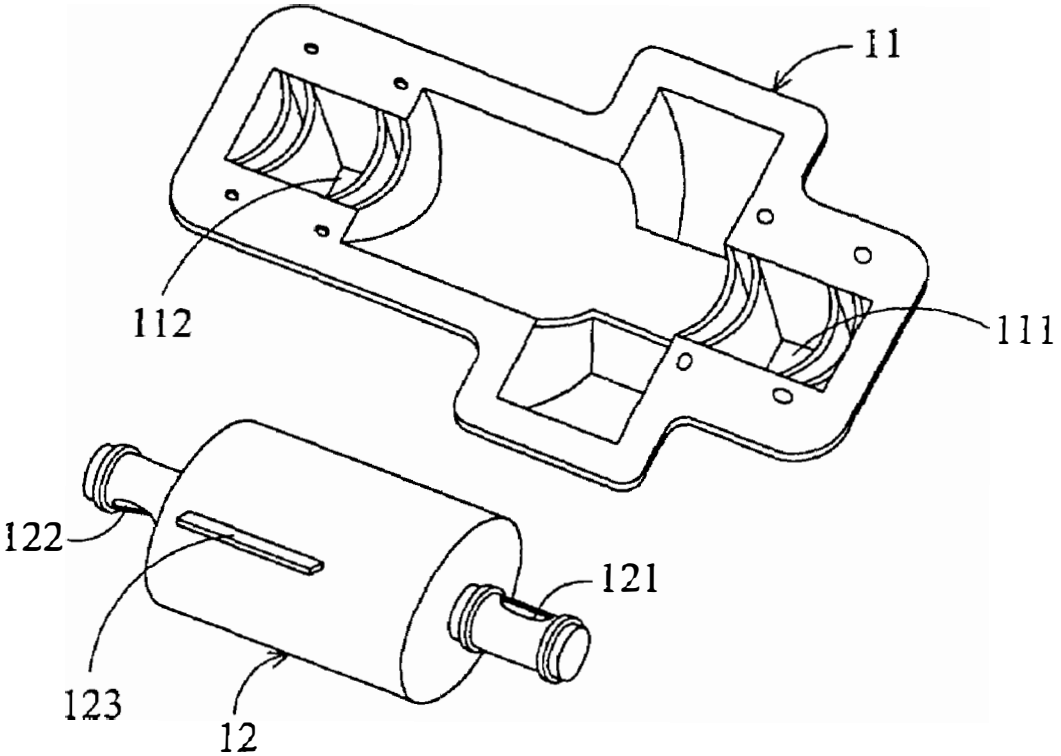

FIG. 1C

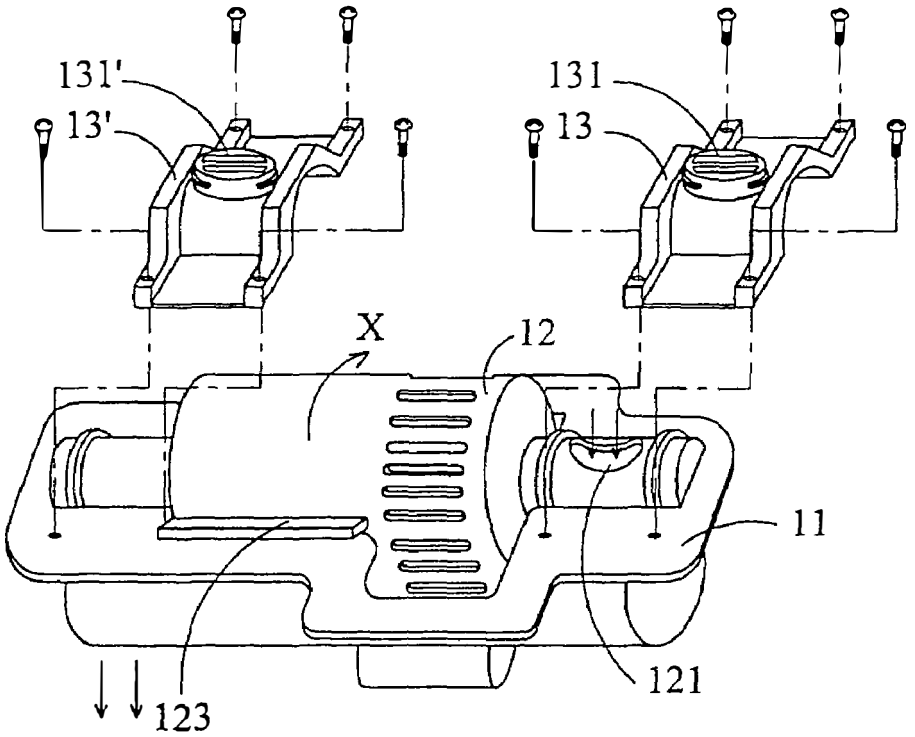

FIG. 1D

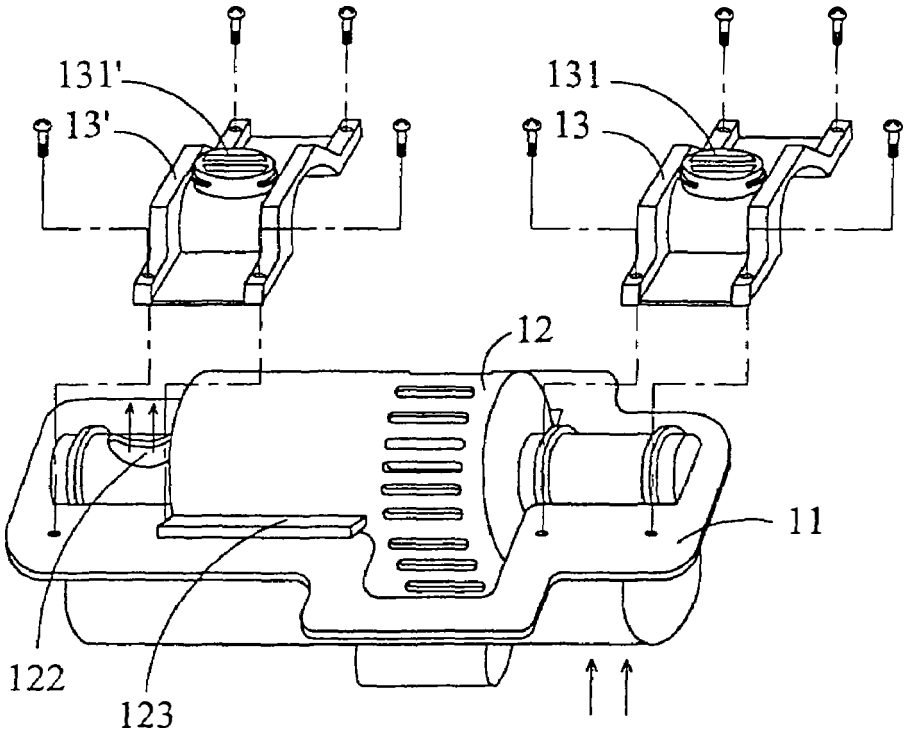

FIG. 1E

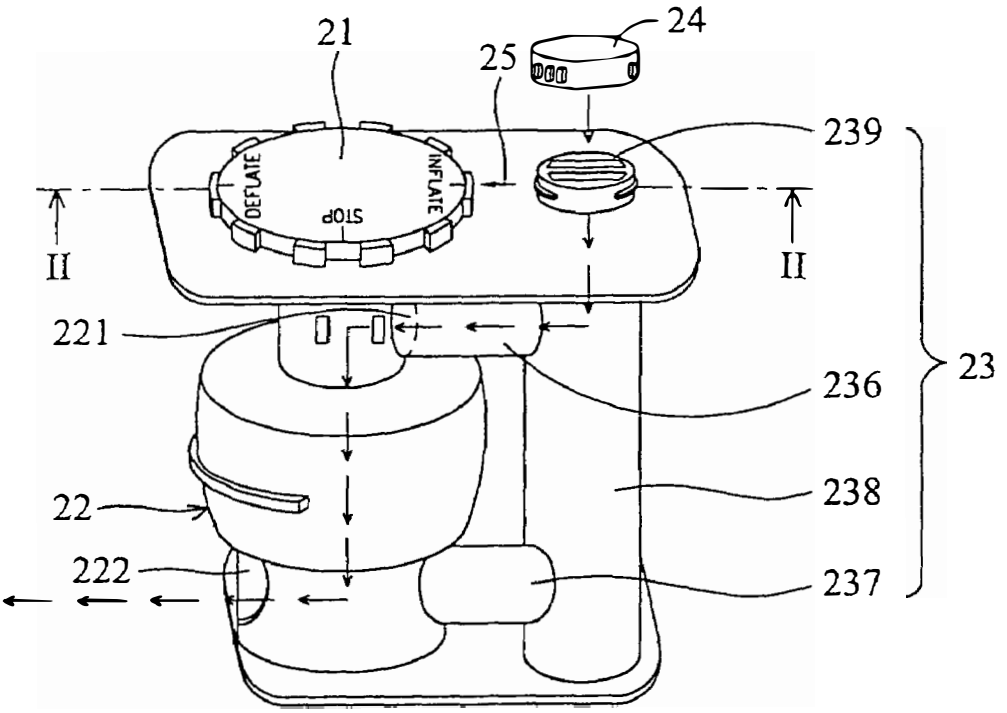
21
24
25
239
DEFLATE
INFLATE
STOP
II
II
221
236
23
238
22
222
237

FIG. 2A

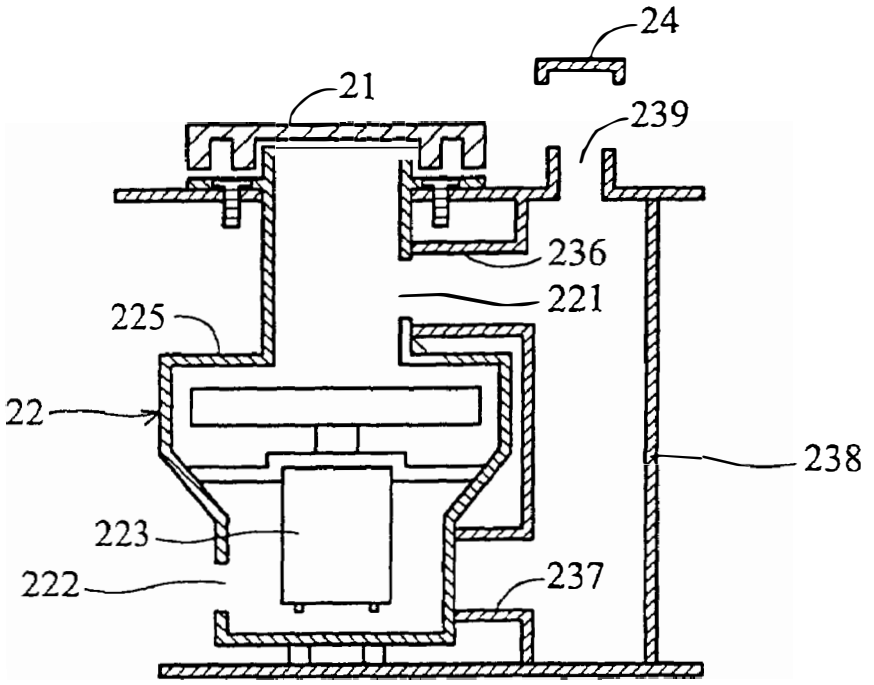
24
21
239
236
221
225
22
238
223
222
237

FIG. 2B

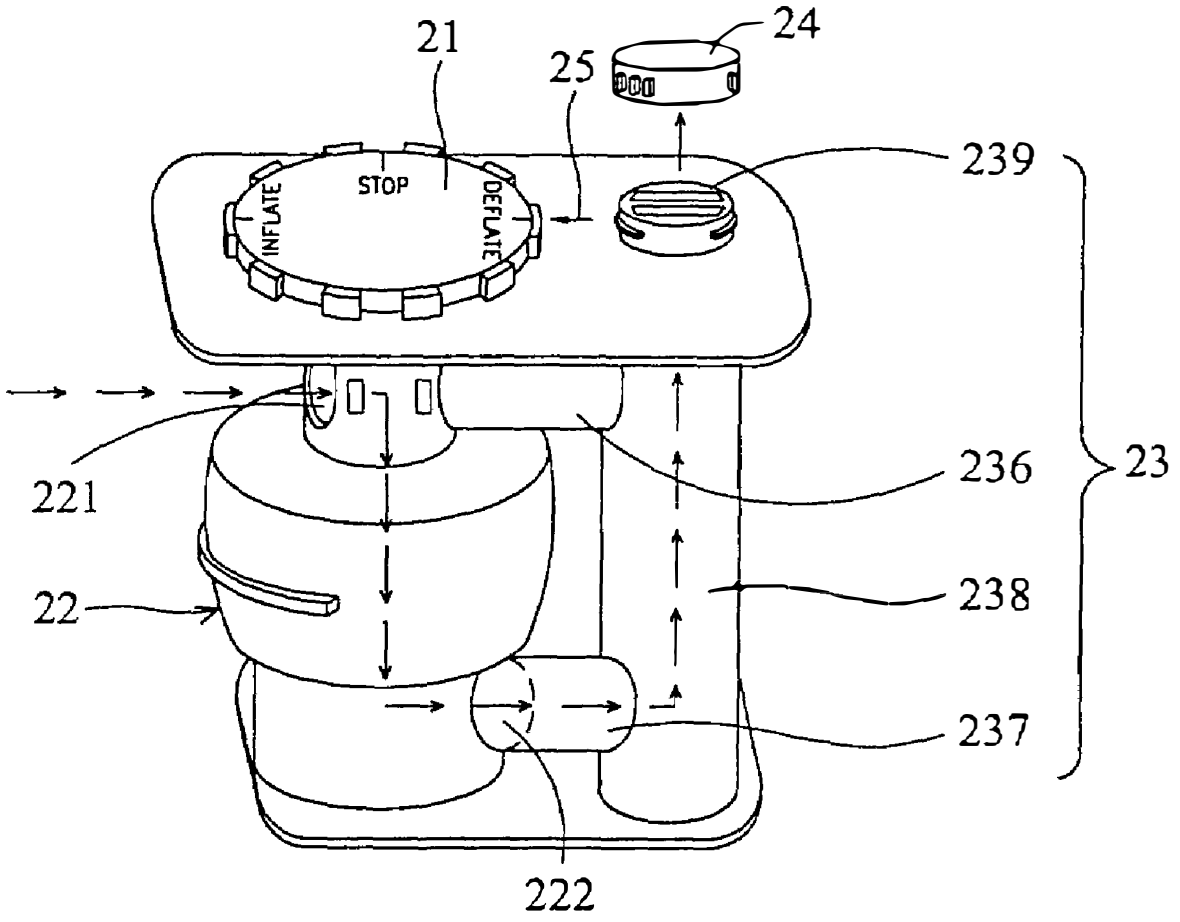

FIG. 2C

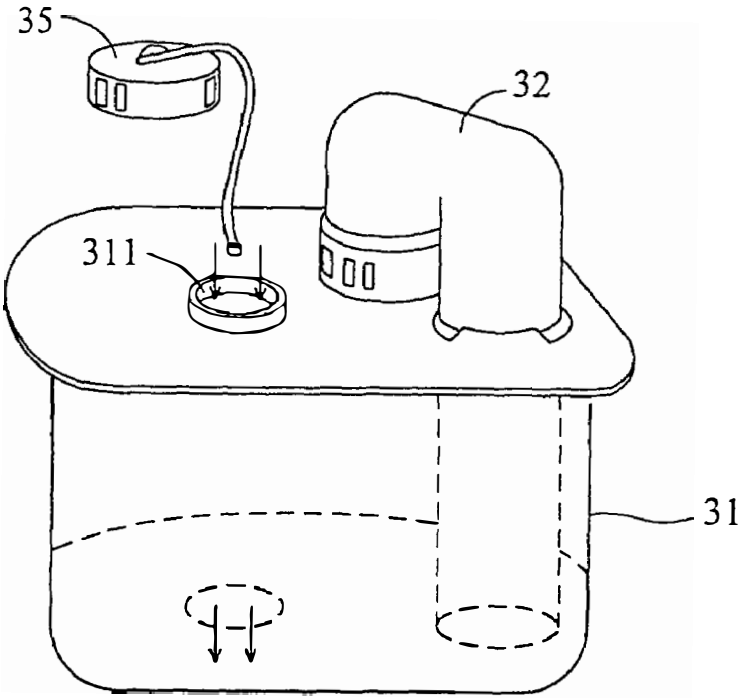

FIG. 3A

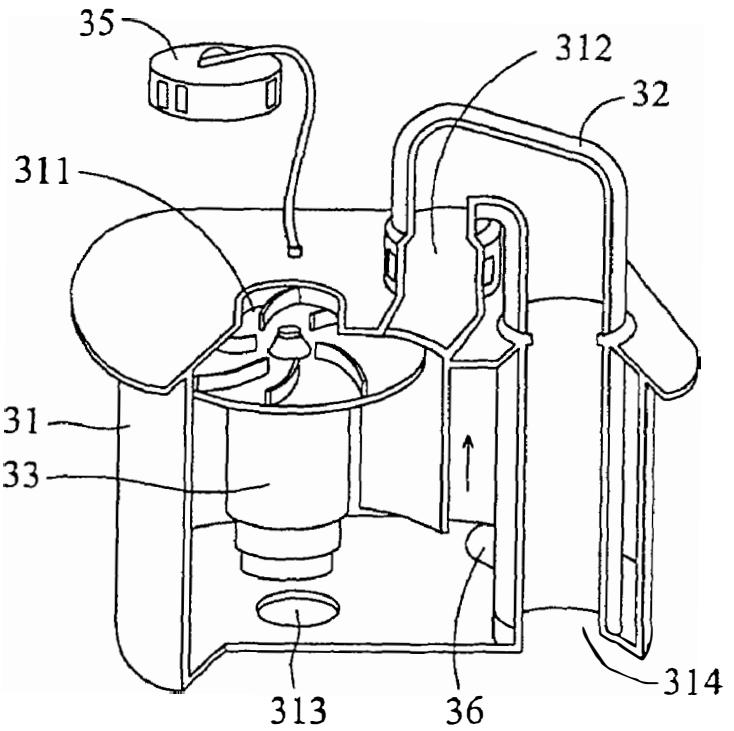

FIG. 3B

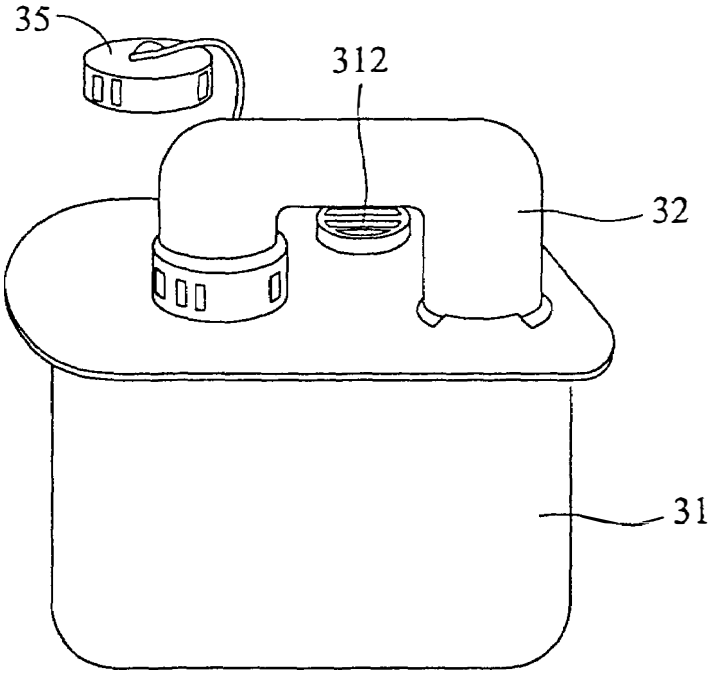

FIG. 3C

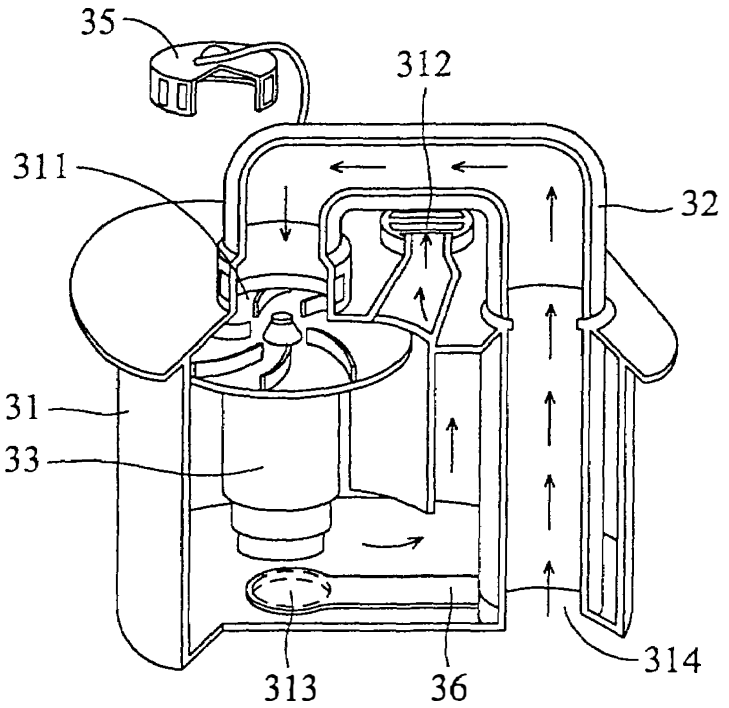

FIG. 3D

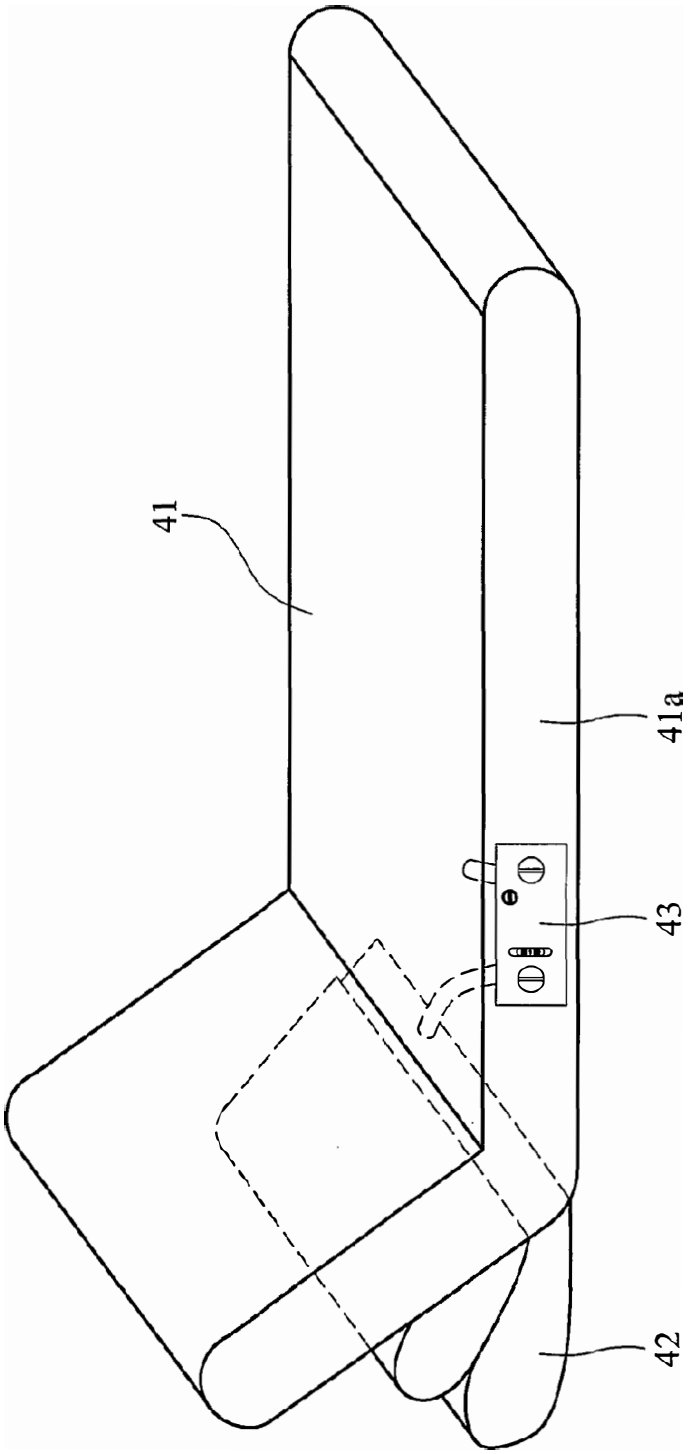

FIG. 4A

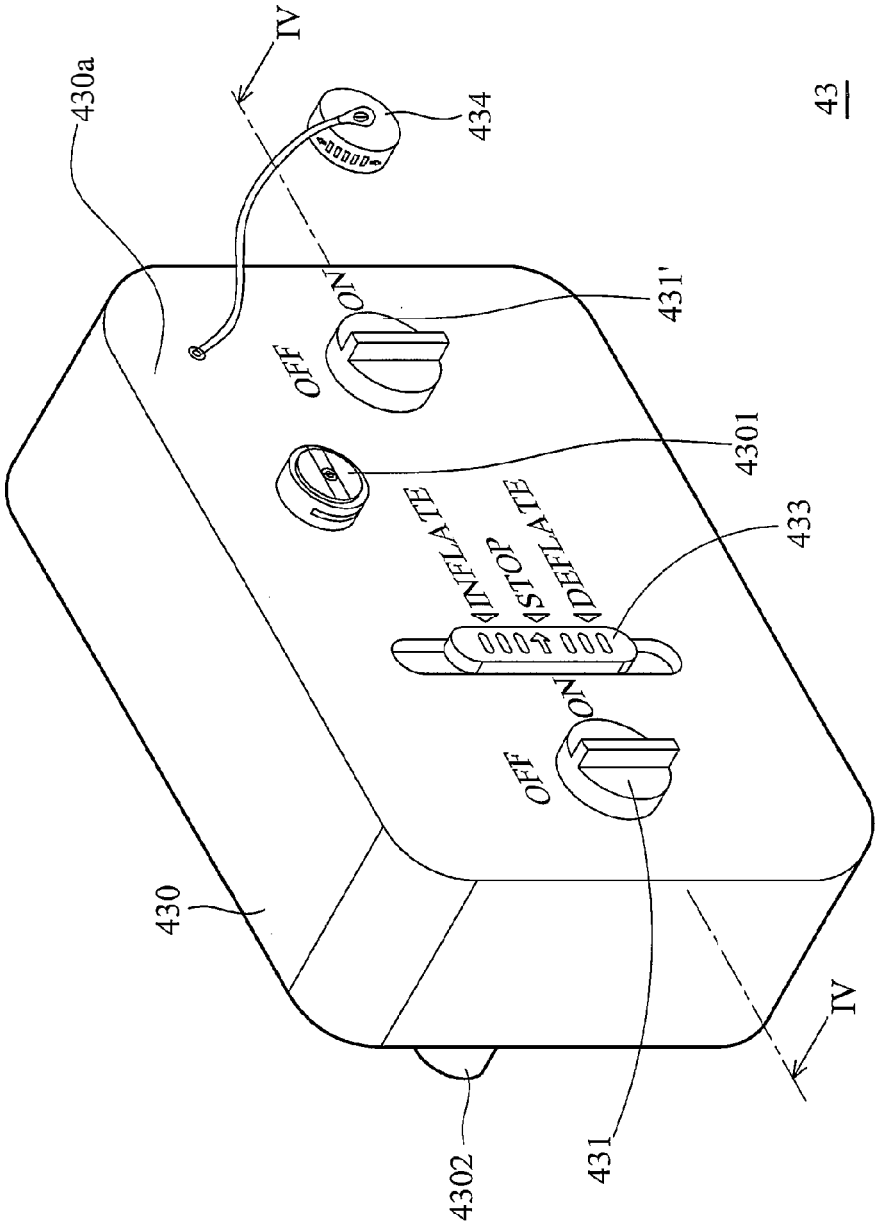
430a
IV
434
43
431'
ON
OFF
4301
433
INFLATE
STOP
DEFLATE
ON
OFF
430
IV
4302
431

FIG. 4B

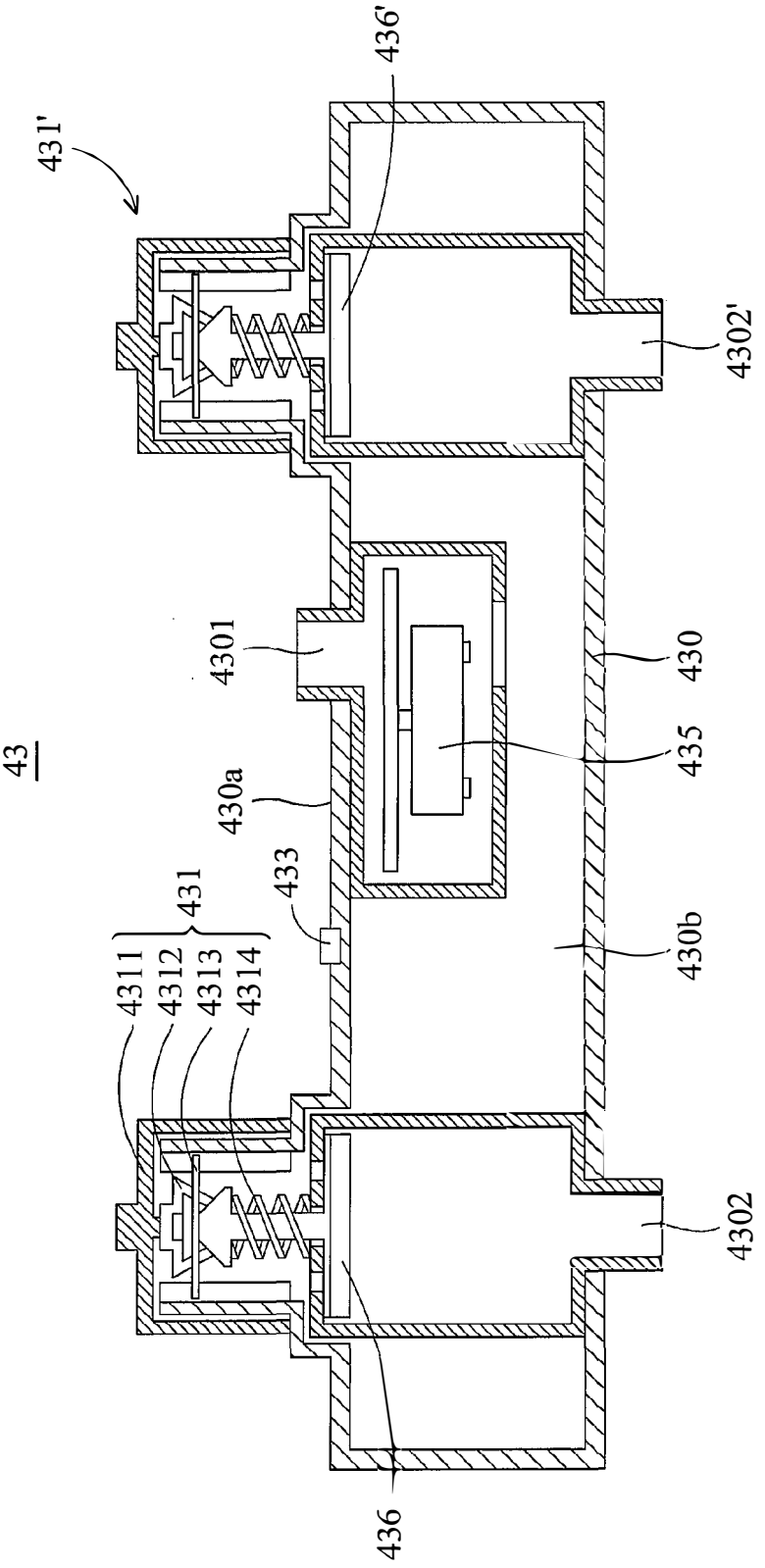
43
431'
436'
4302'
4301
430
430a
435
433
431
4311
4312
4313
4314
430b
4302
436

FIG. 4C

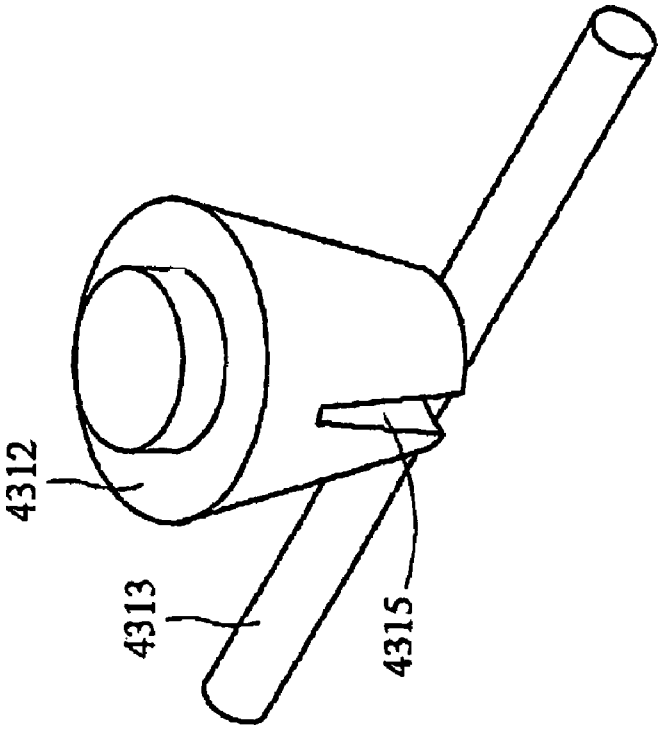

FIG. 4E

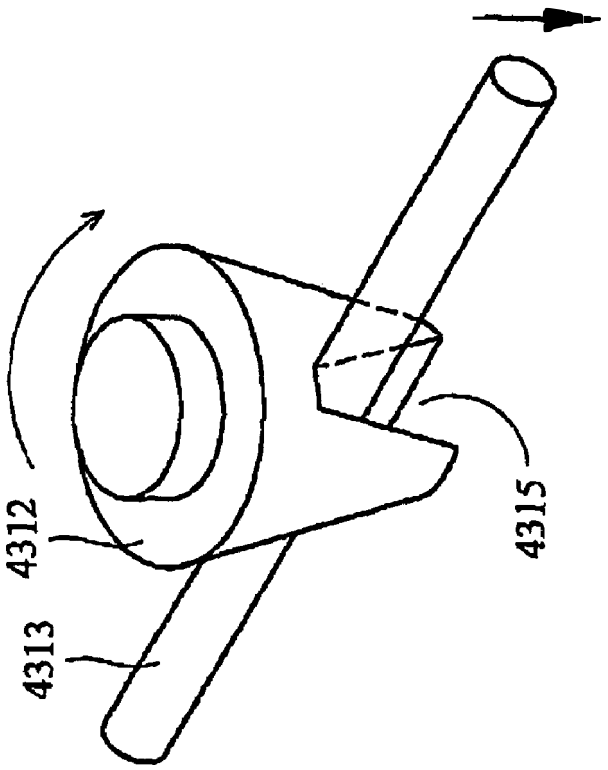

FIG. 4D

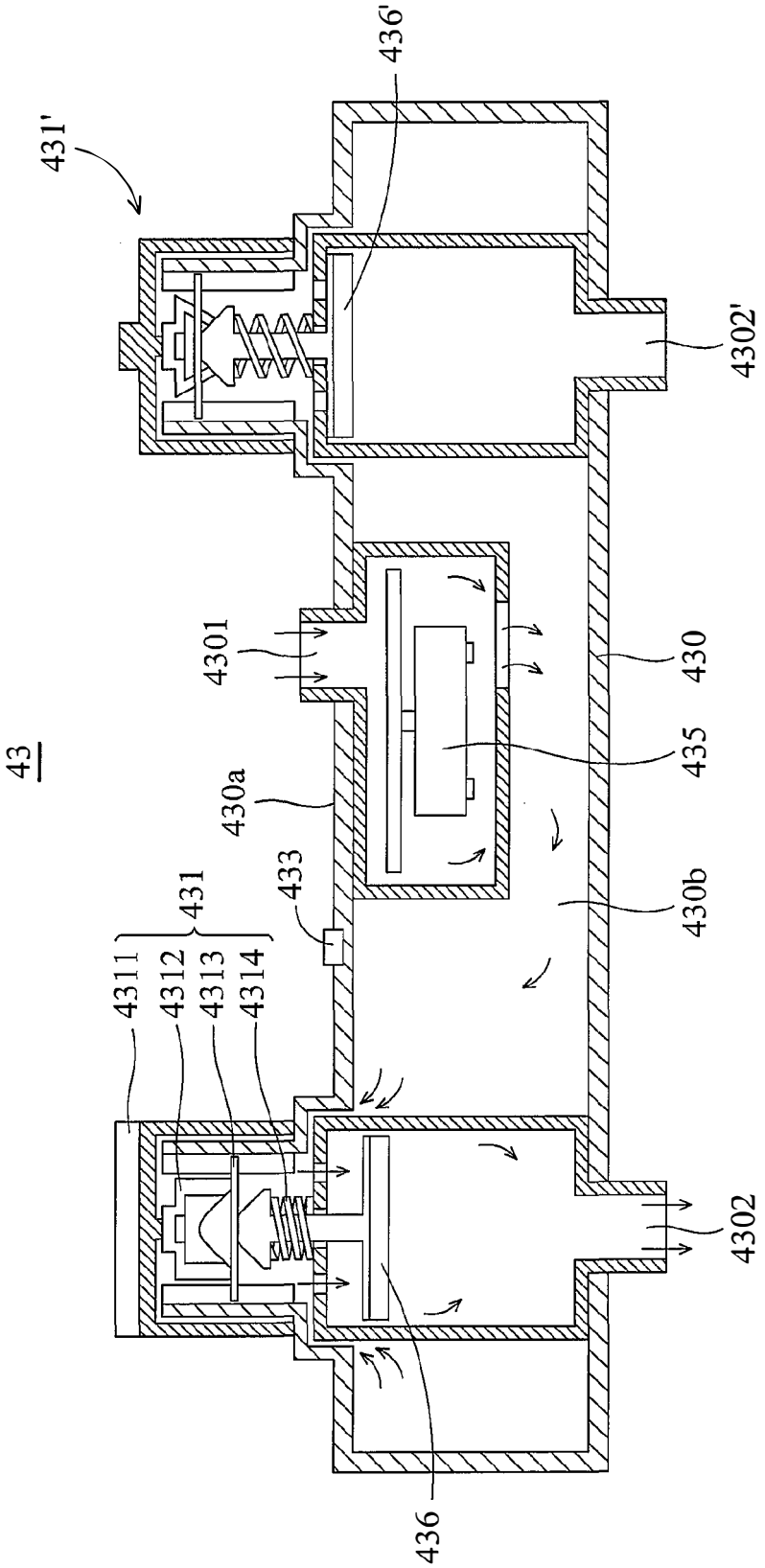
43
431'
436'
4302'
4301
430
435
430a
433
431
430b
4311
4312
4313
4314
4302
436

FIG. 4F

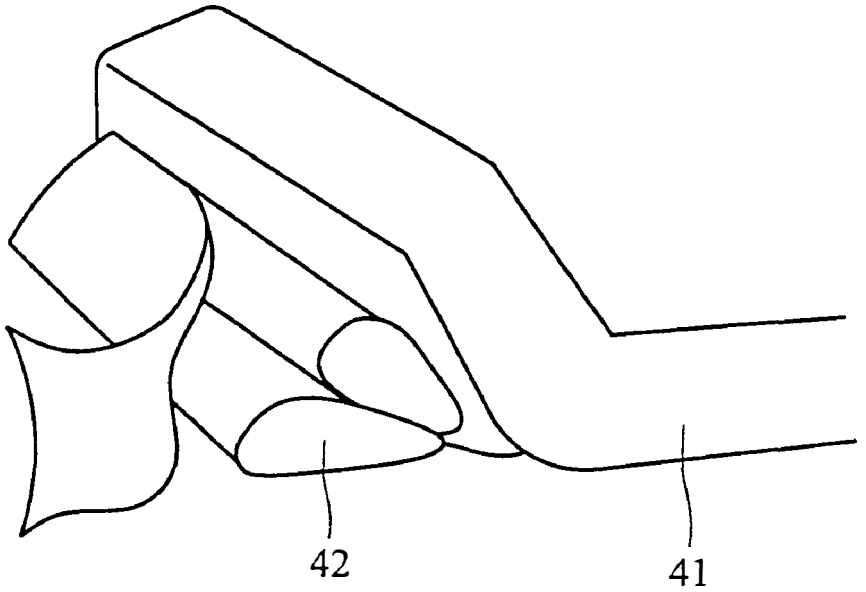

FIG. 4G

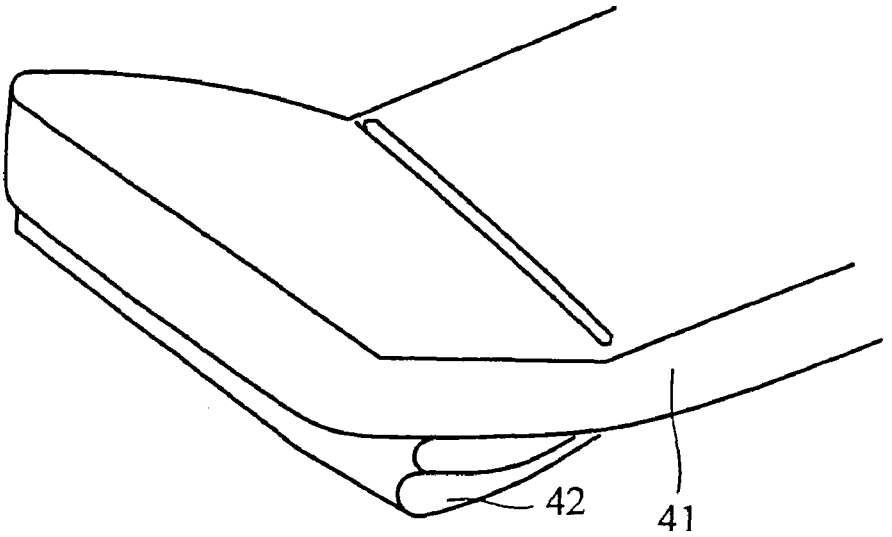

FIG. 4H

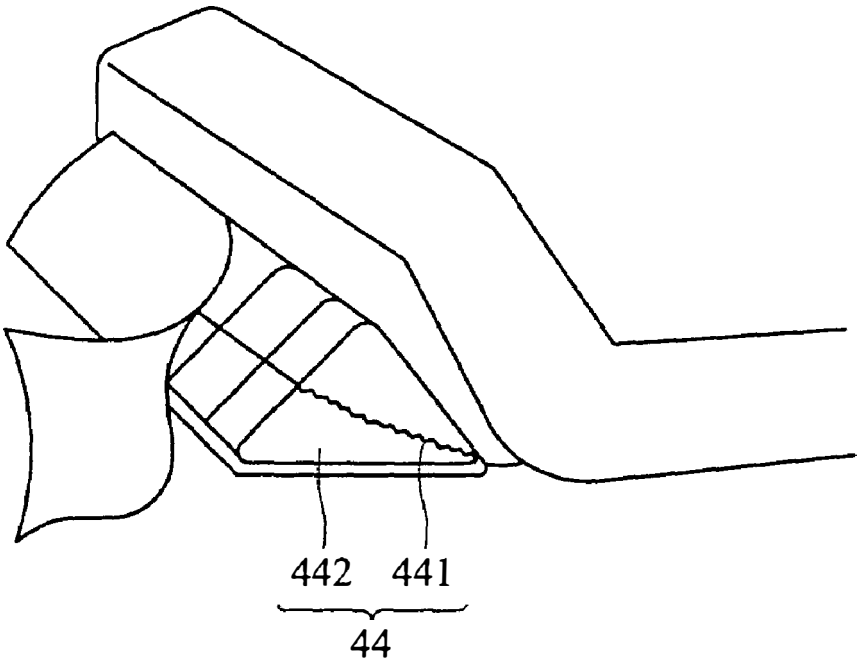

FIG. 4I

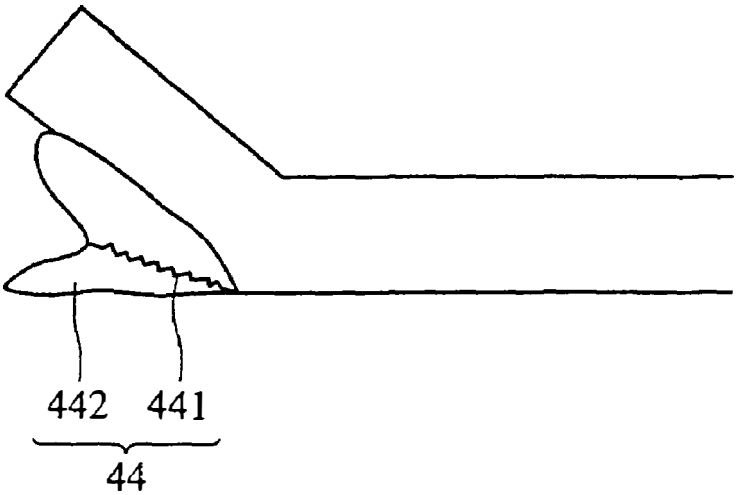

FIG. 4J

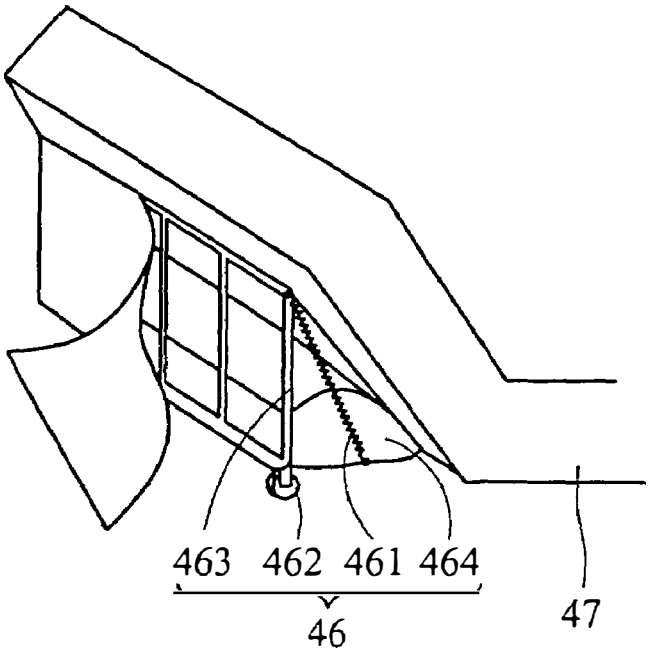

FIG. 4K

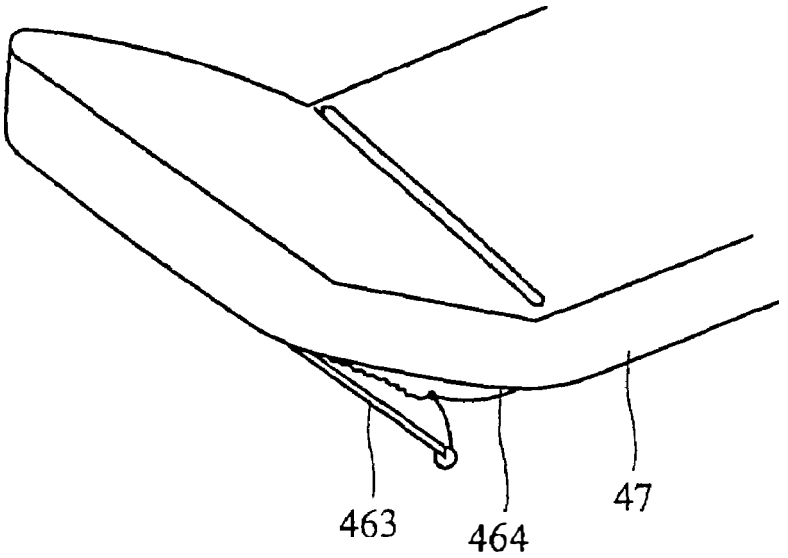

FIG. 4L

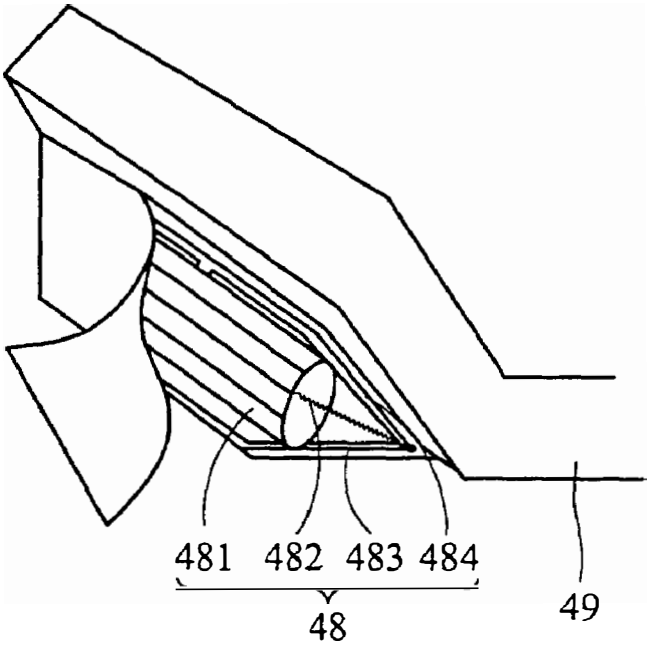

FIG. 4M

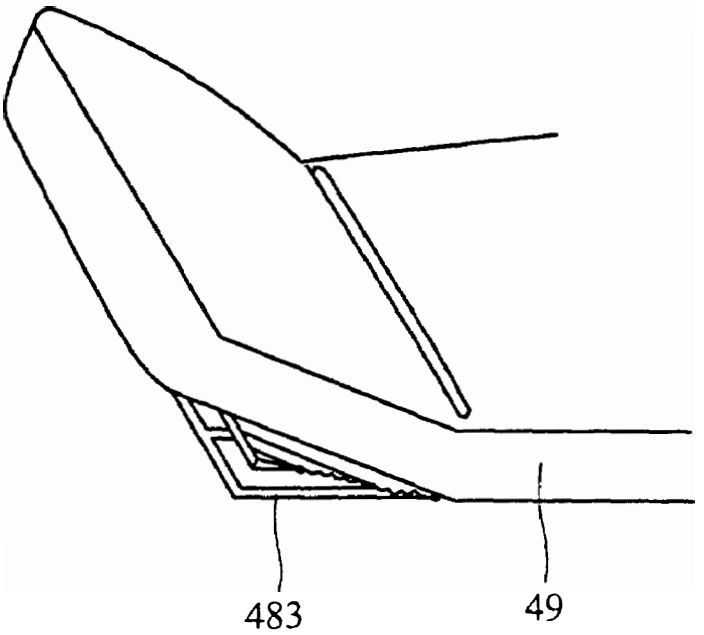

FIG. 4N

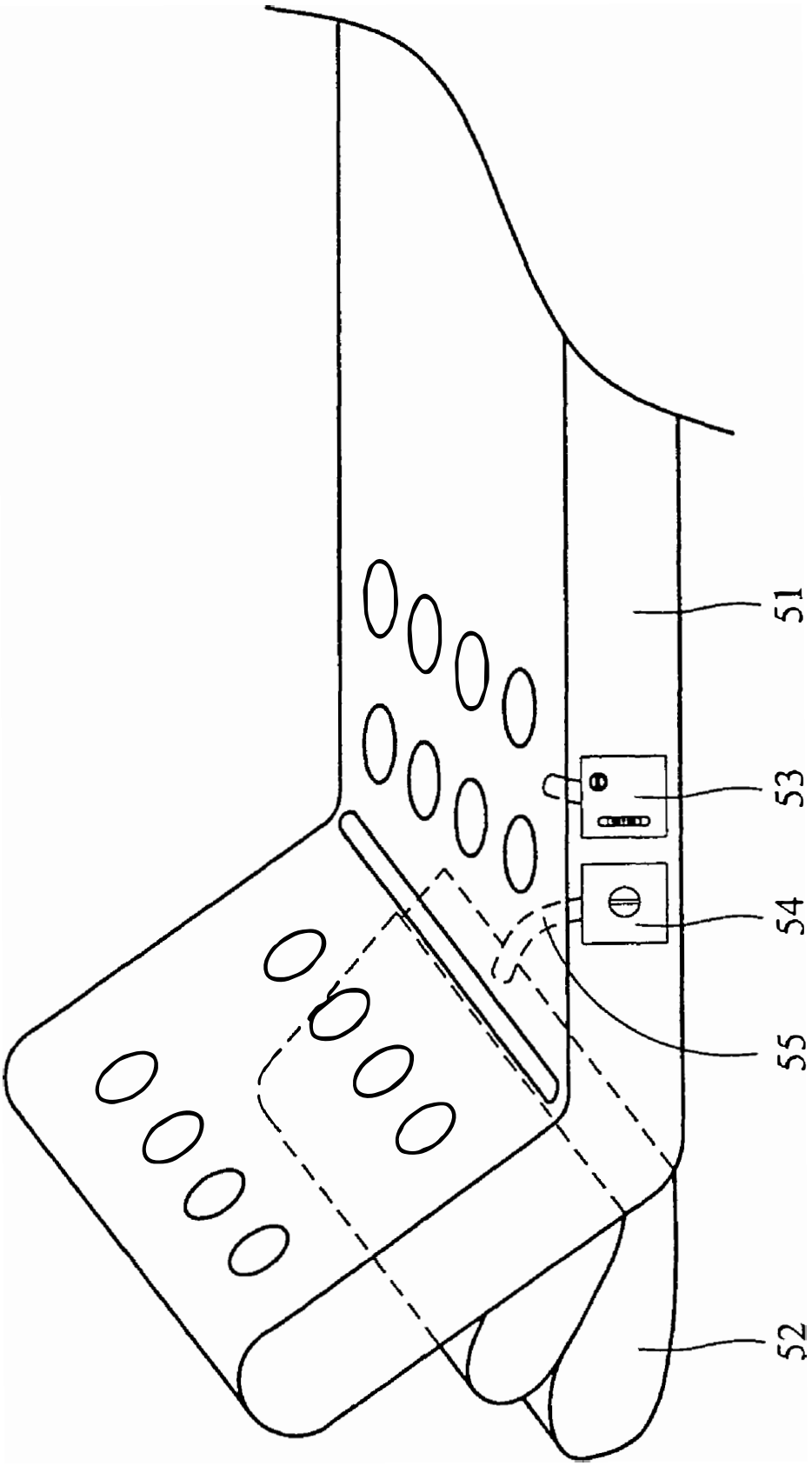

FIG. 5A

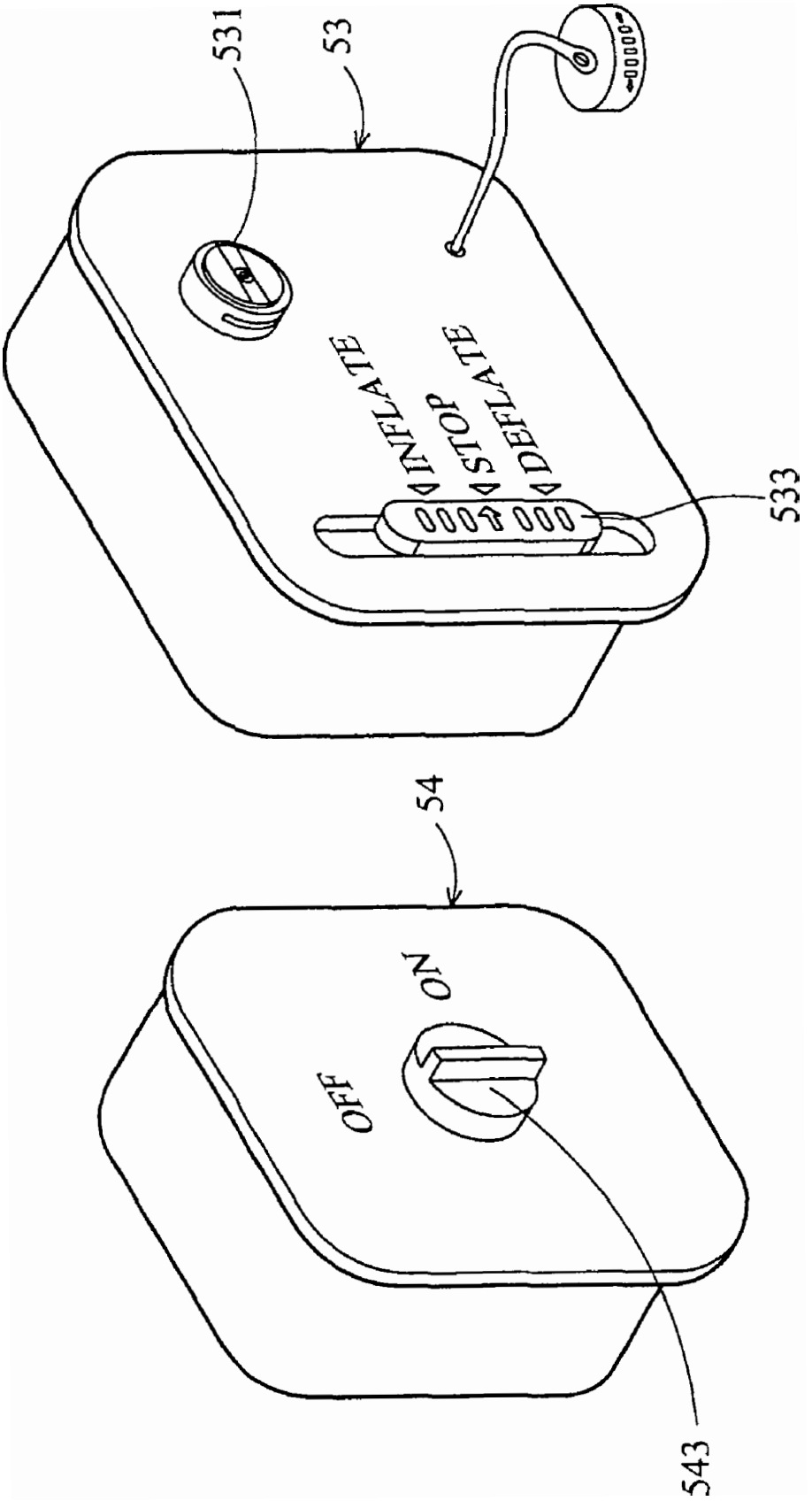

FIG. 5B

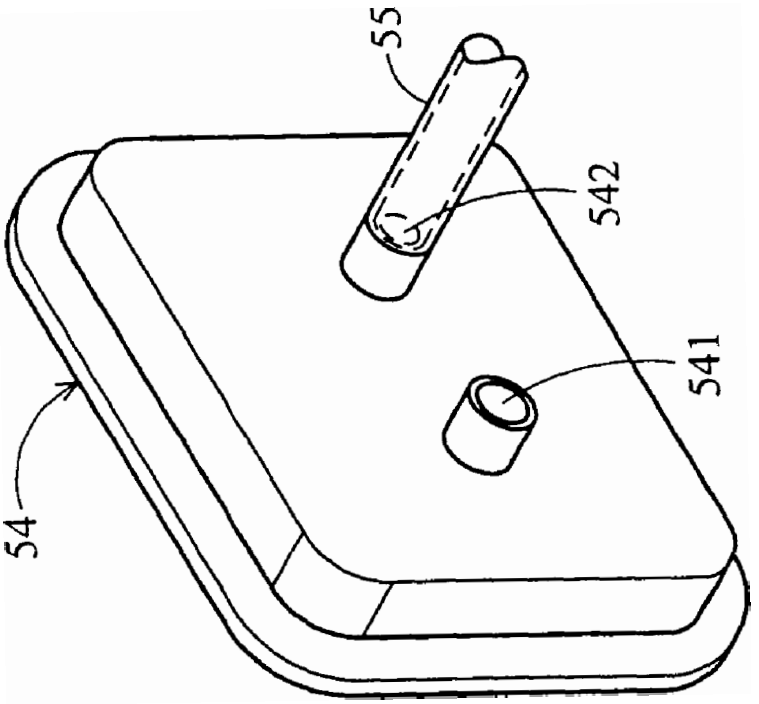

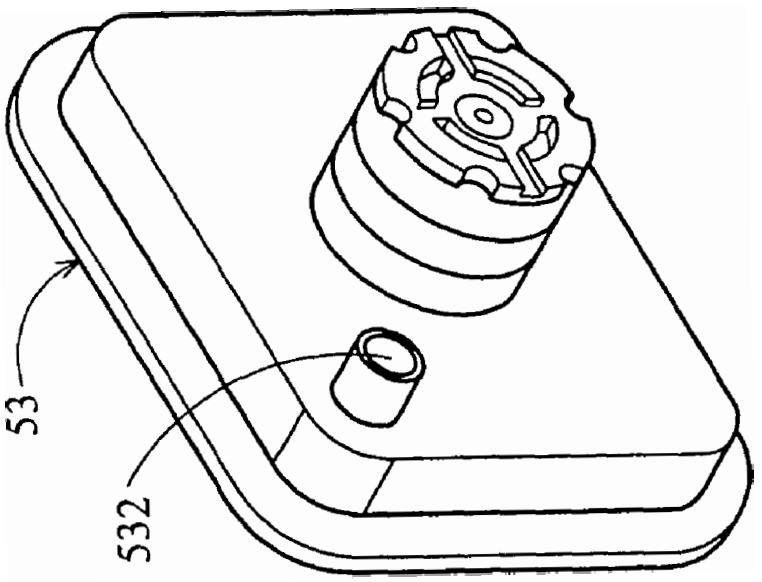

FIG. 5C

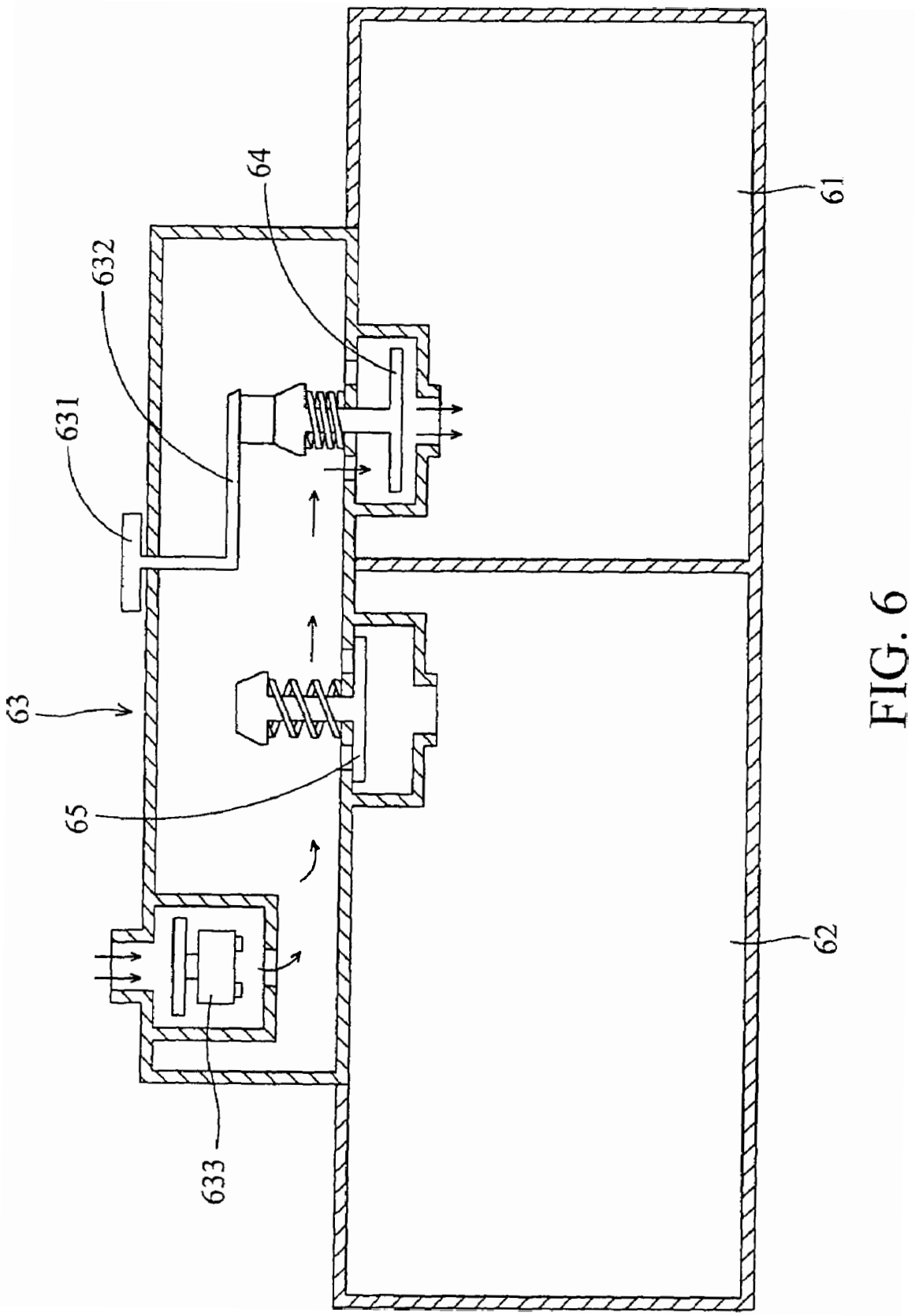

FIG. 6

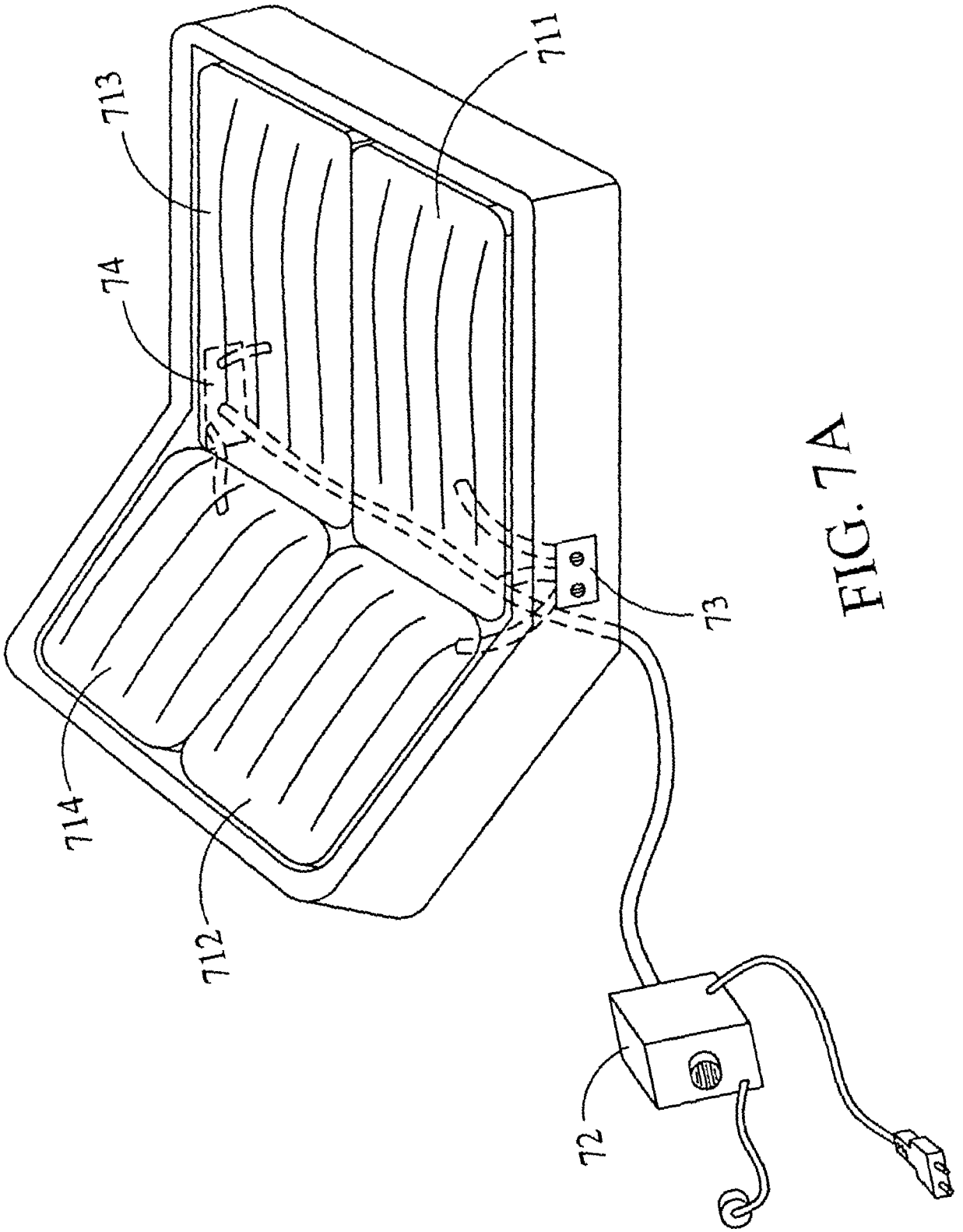

FIG. 7A

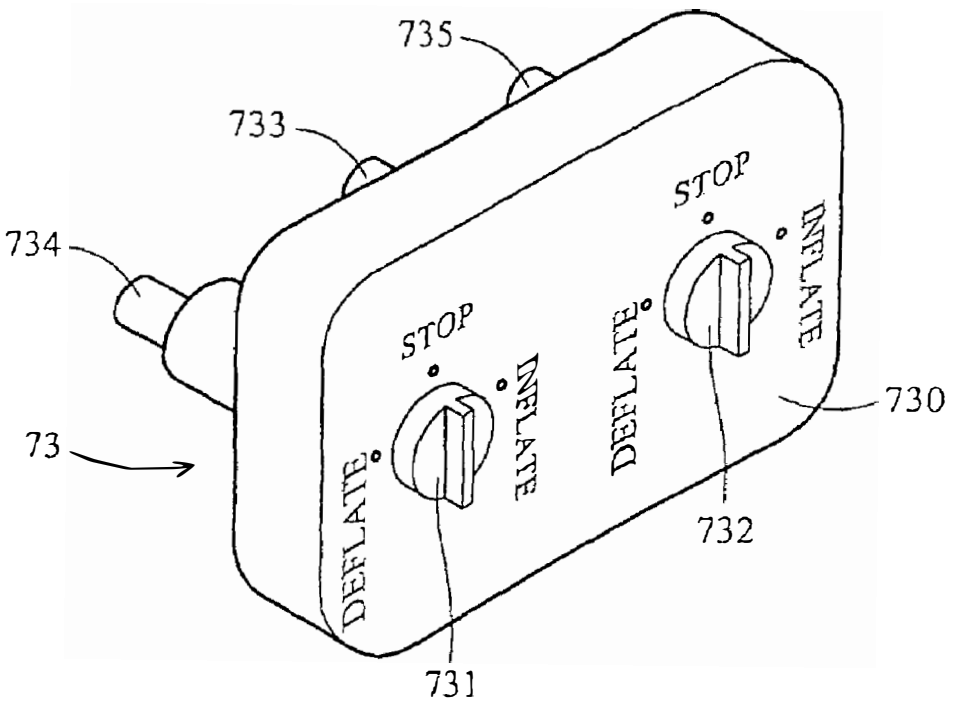
735
733
734
73
STOP
DEFLATE
INFLATE
STOP
DEFLATE
INFLATE
730
731
732

FIG. 7B

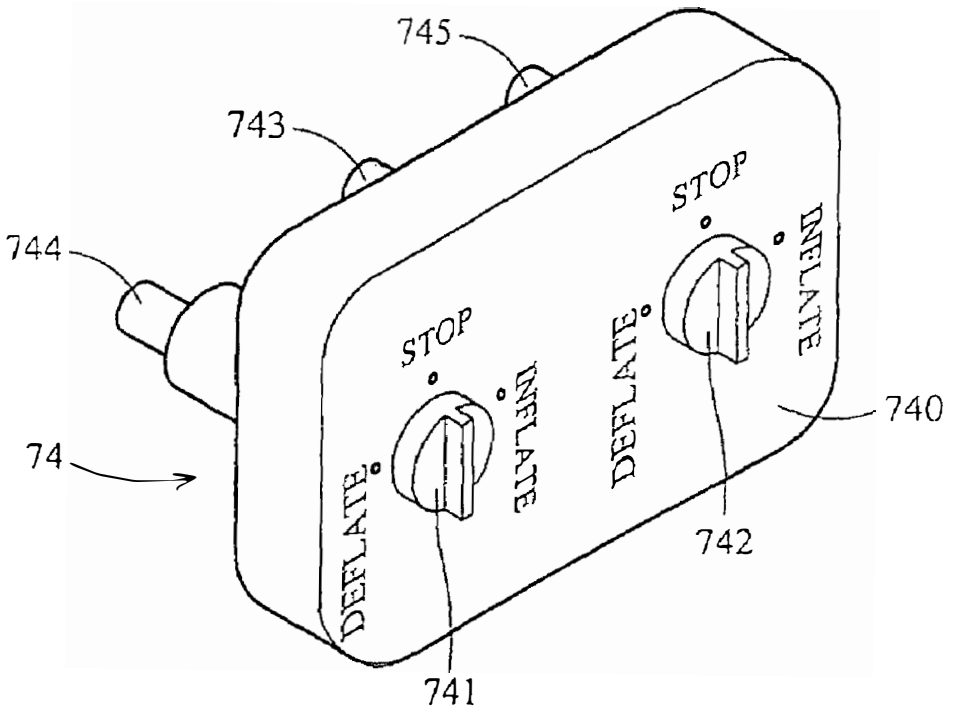
745
743
744
74
STOP
DEFLATE
INFLATE
STOP
DEFLATE
INFLATE
740
741
742

FIG. 7C

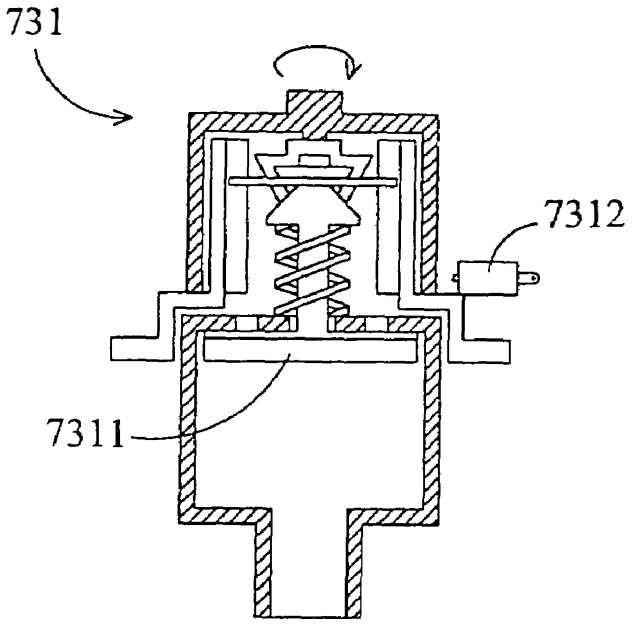

FIG. 7D

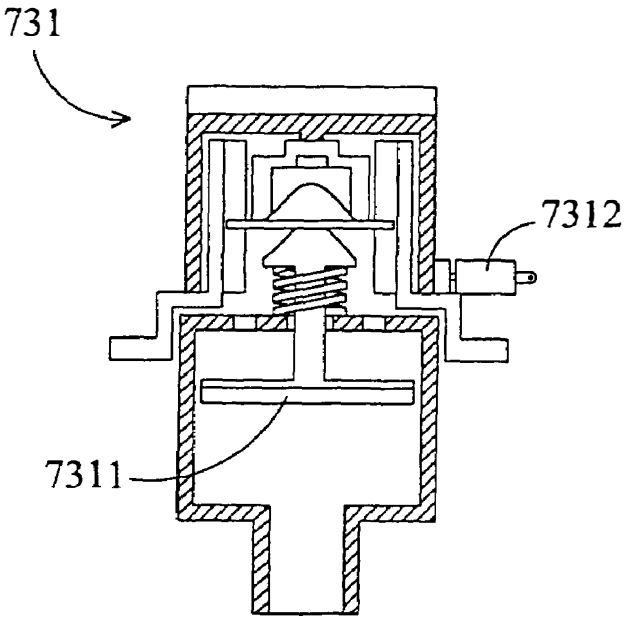

FIG. 7E

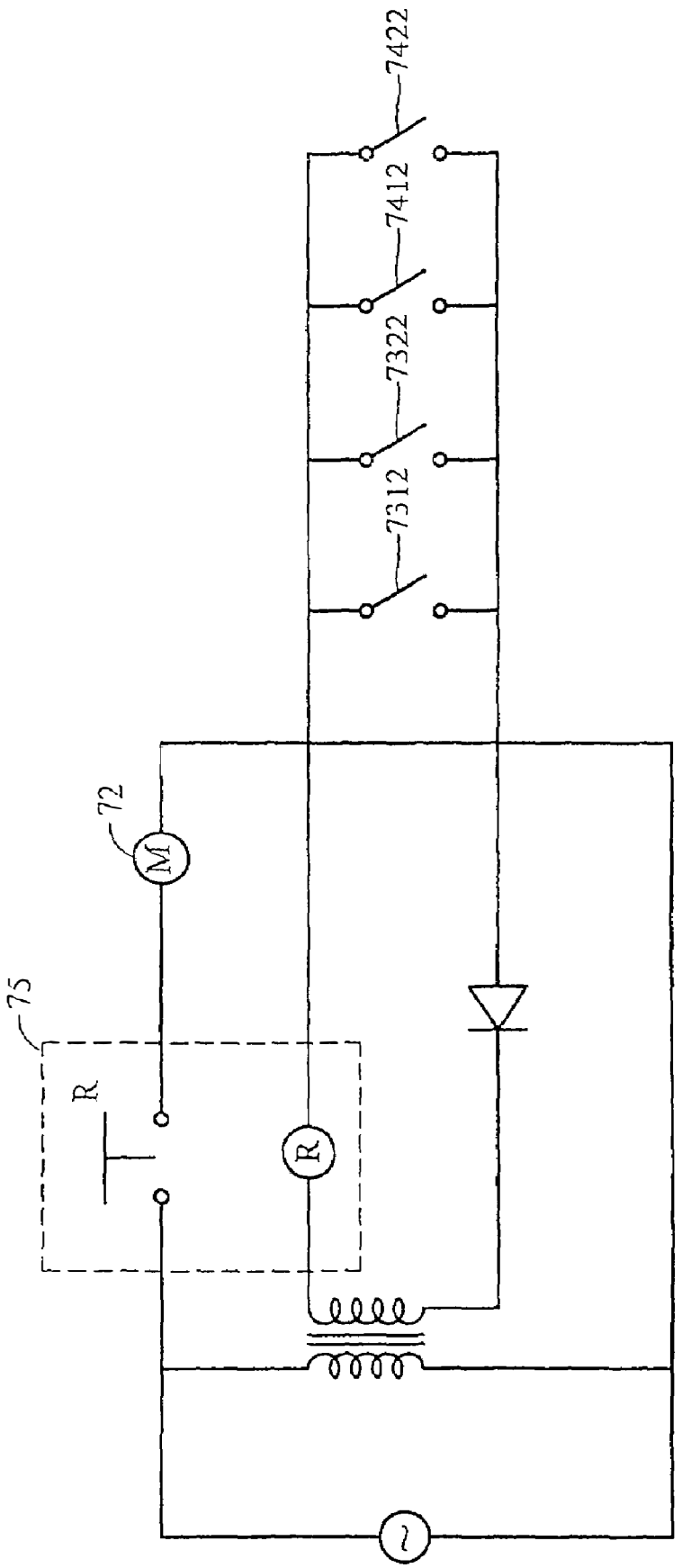

FIG. 7F

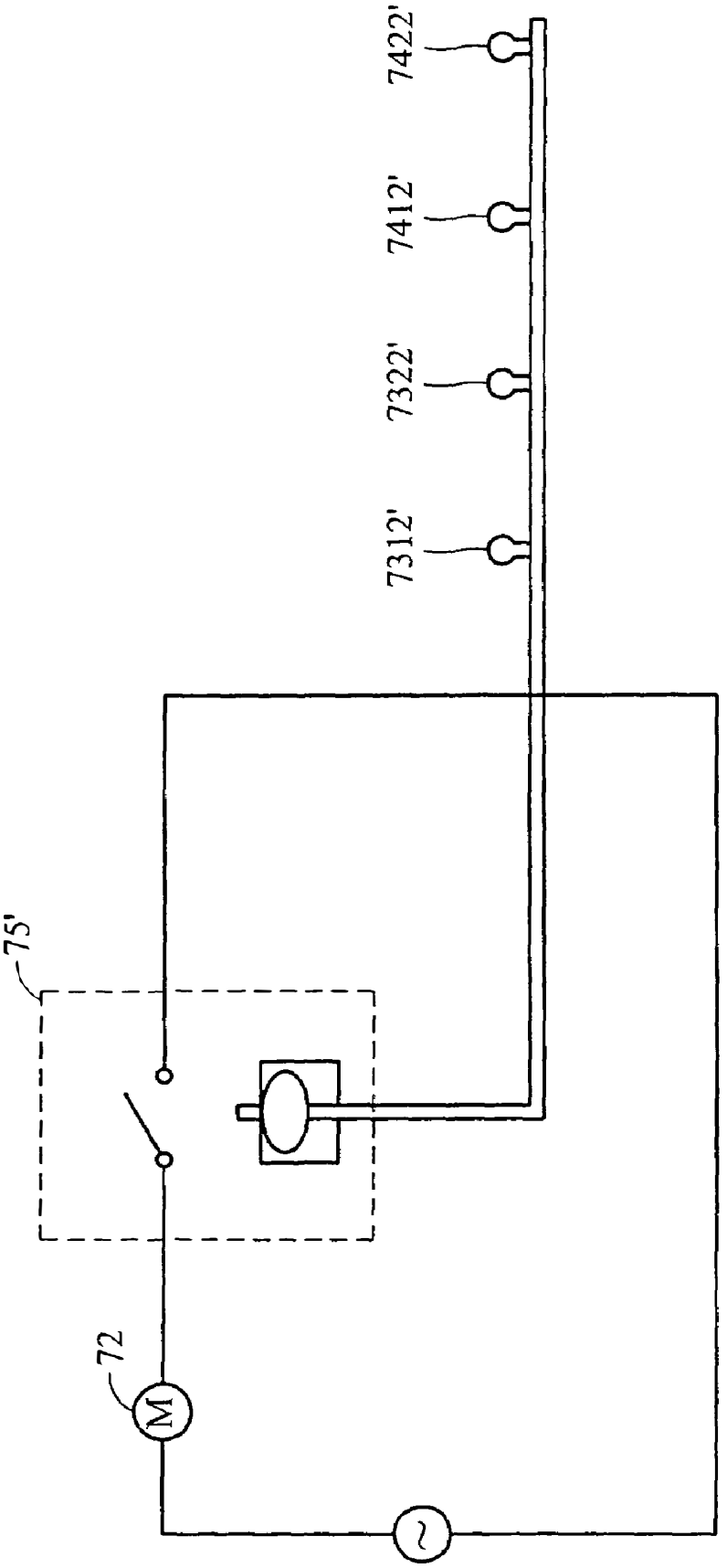

FIG. 7G

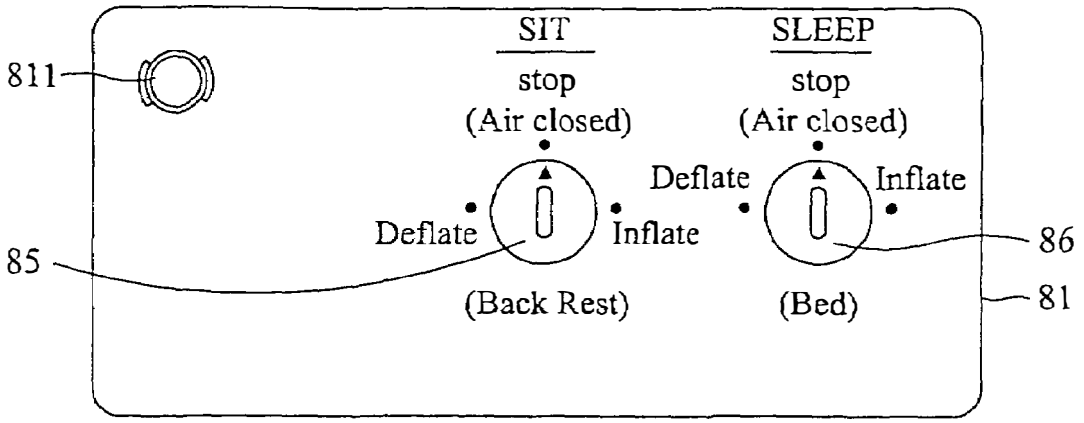

FIG. 8A

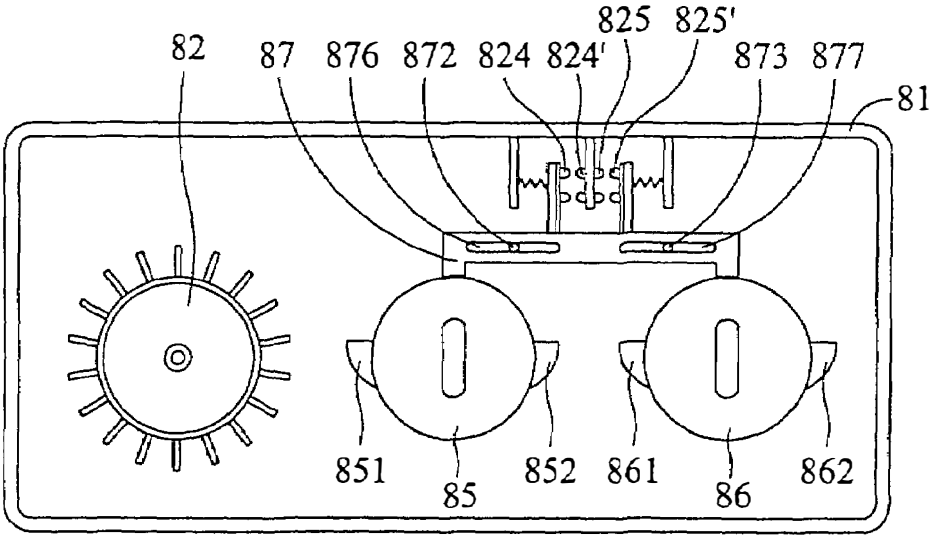

FIG. 8B

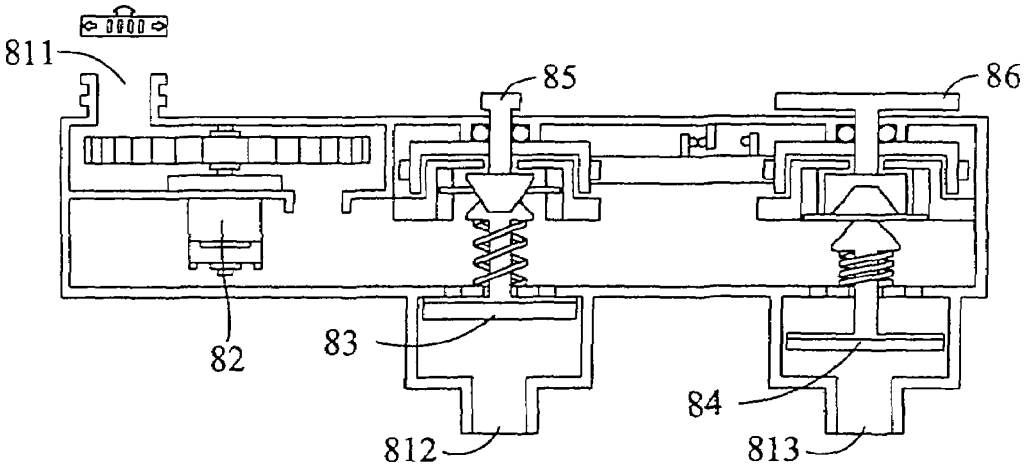

FIG. 8C

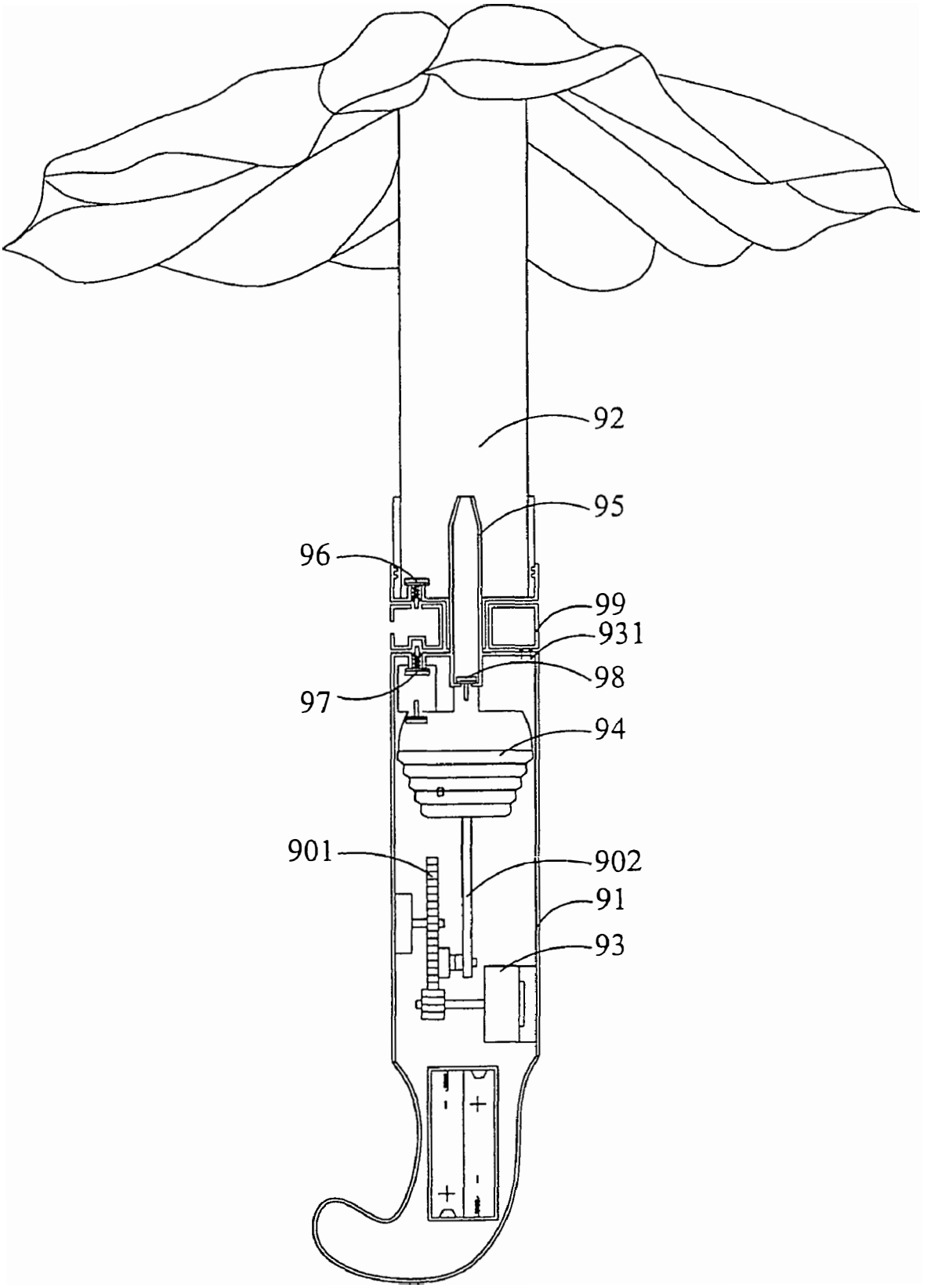

FIG. 9A

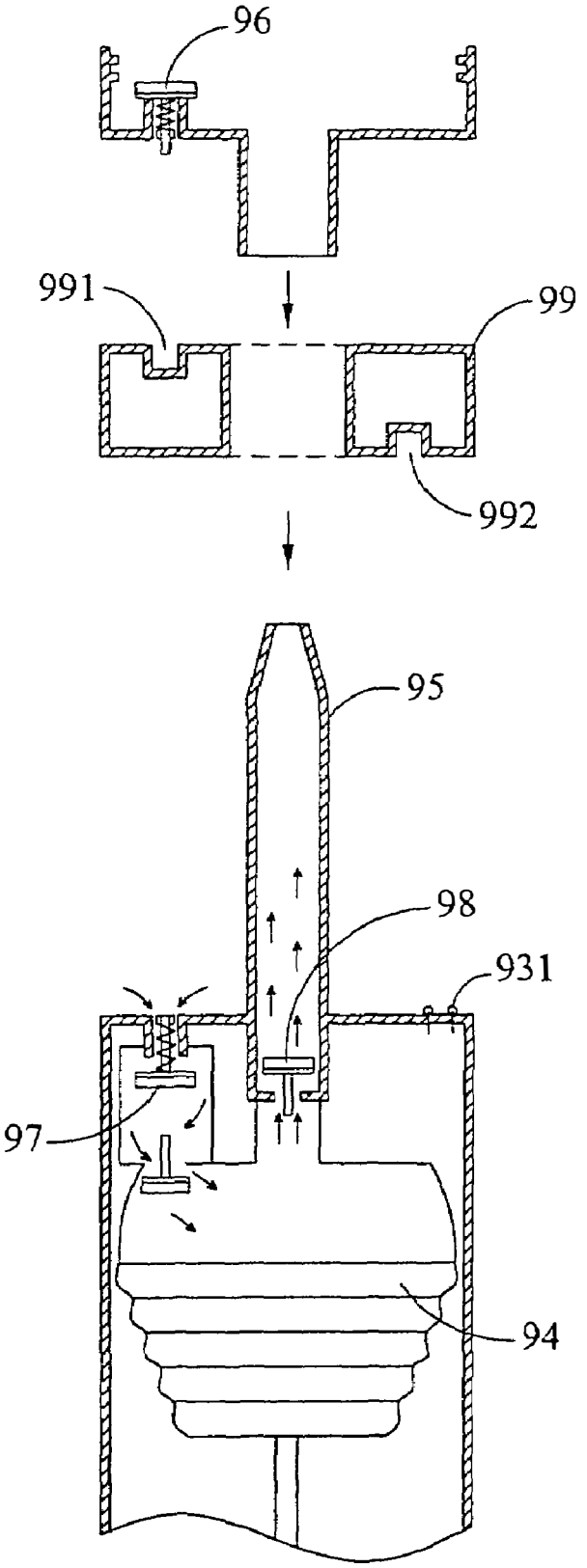

FIG. 9B

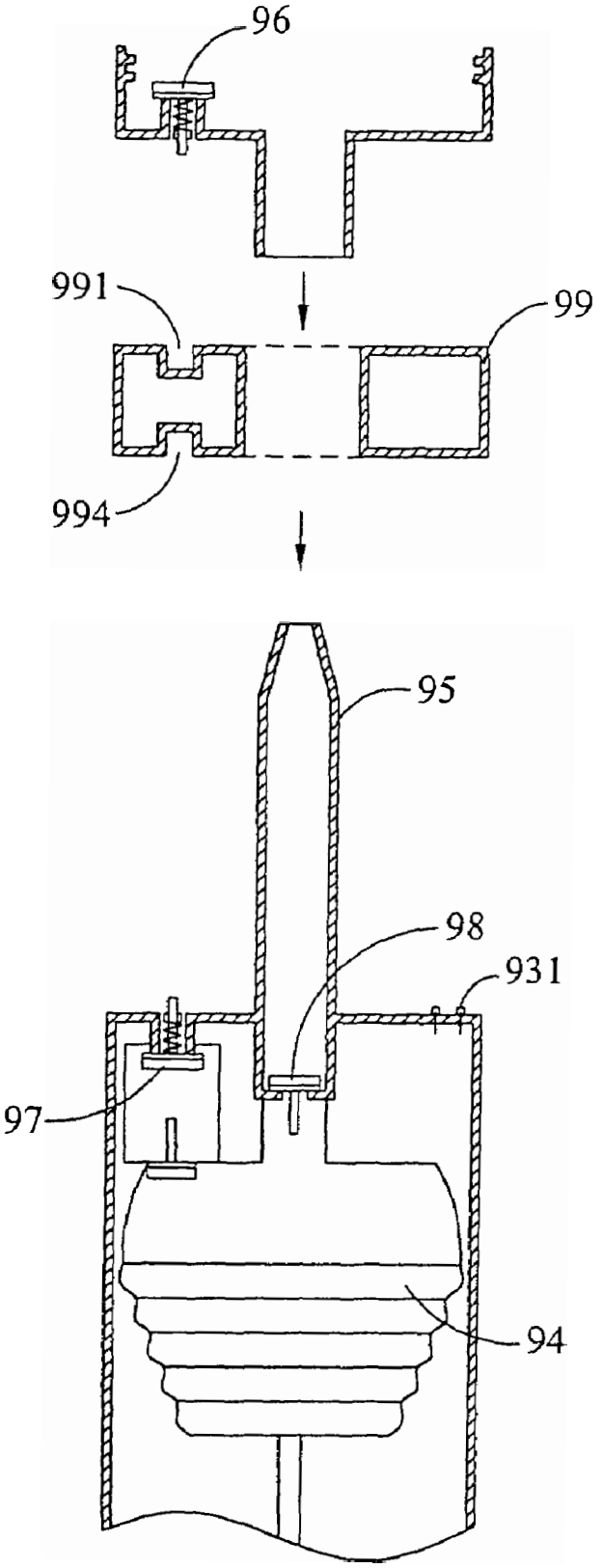

FIG. 9C

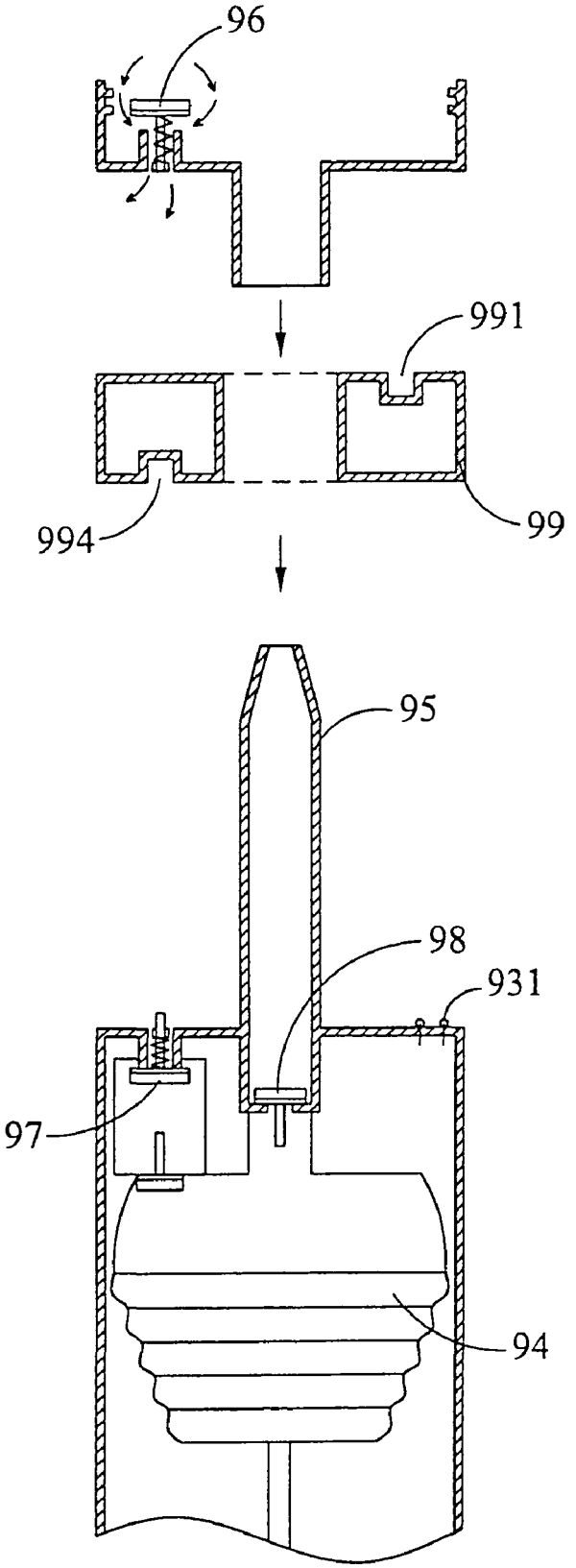

FIG. 9D

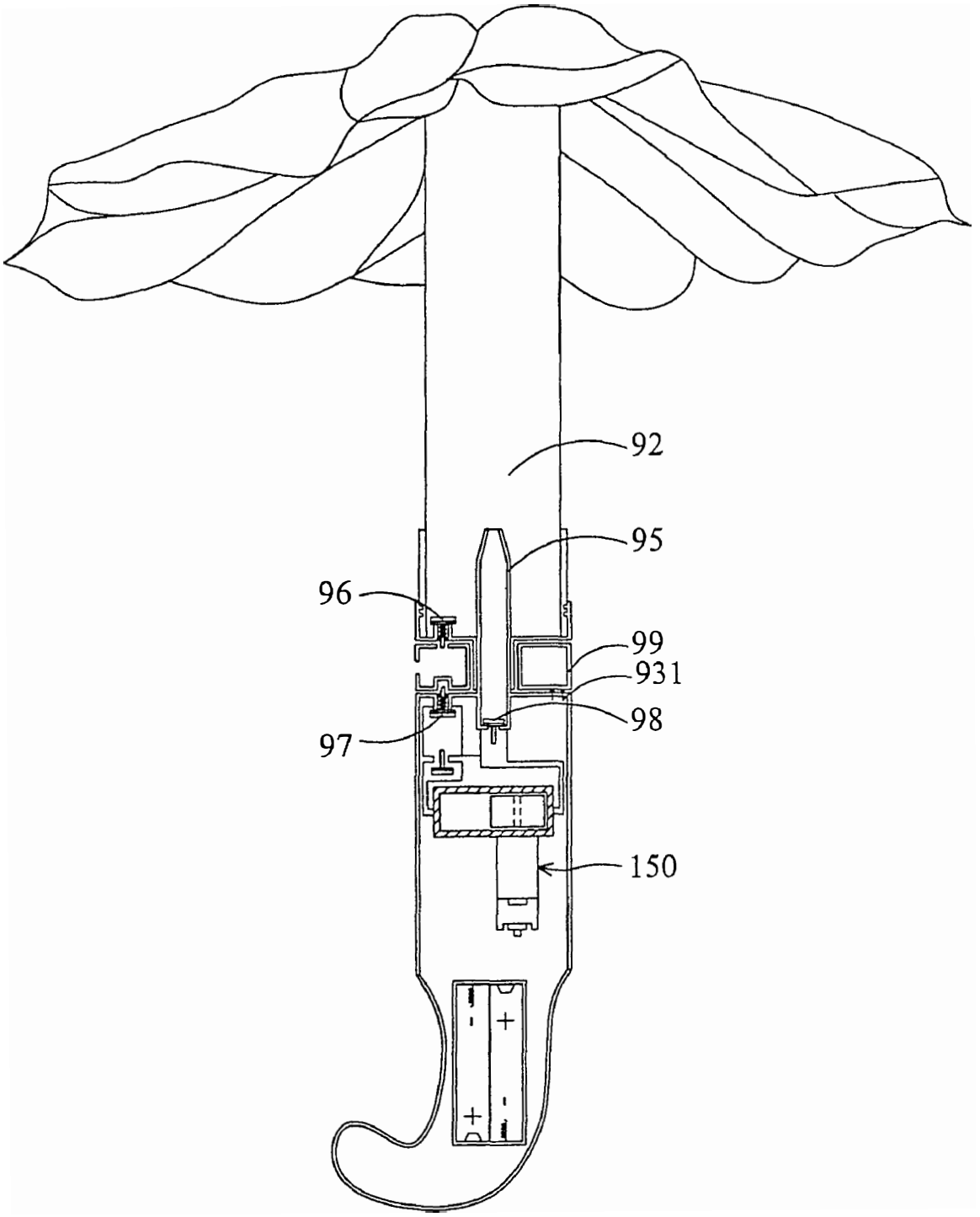

FIG. 10A

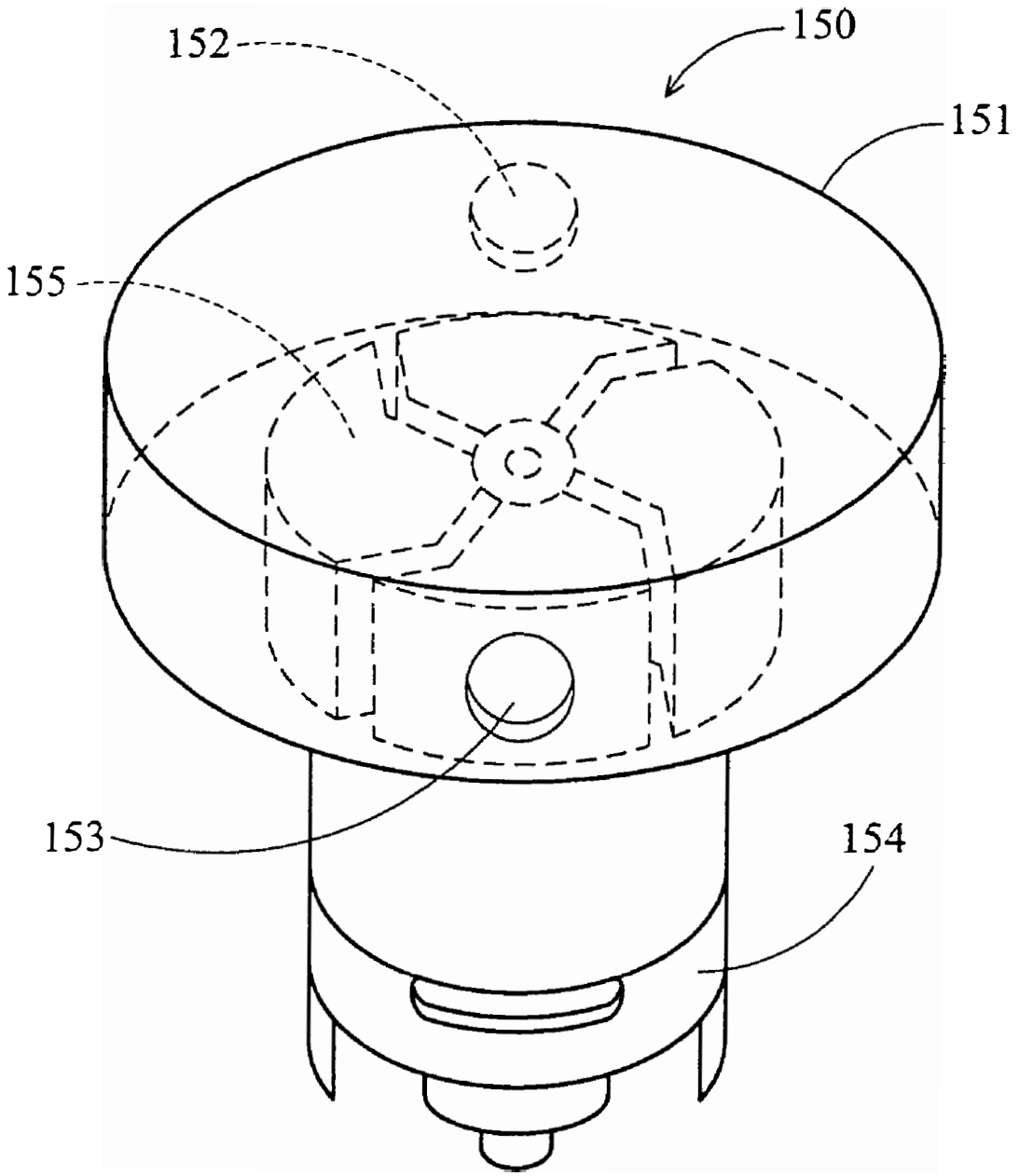

FIG. 10B

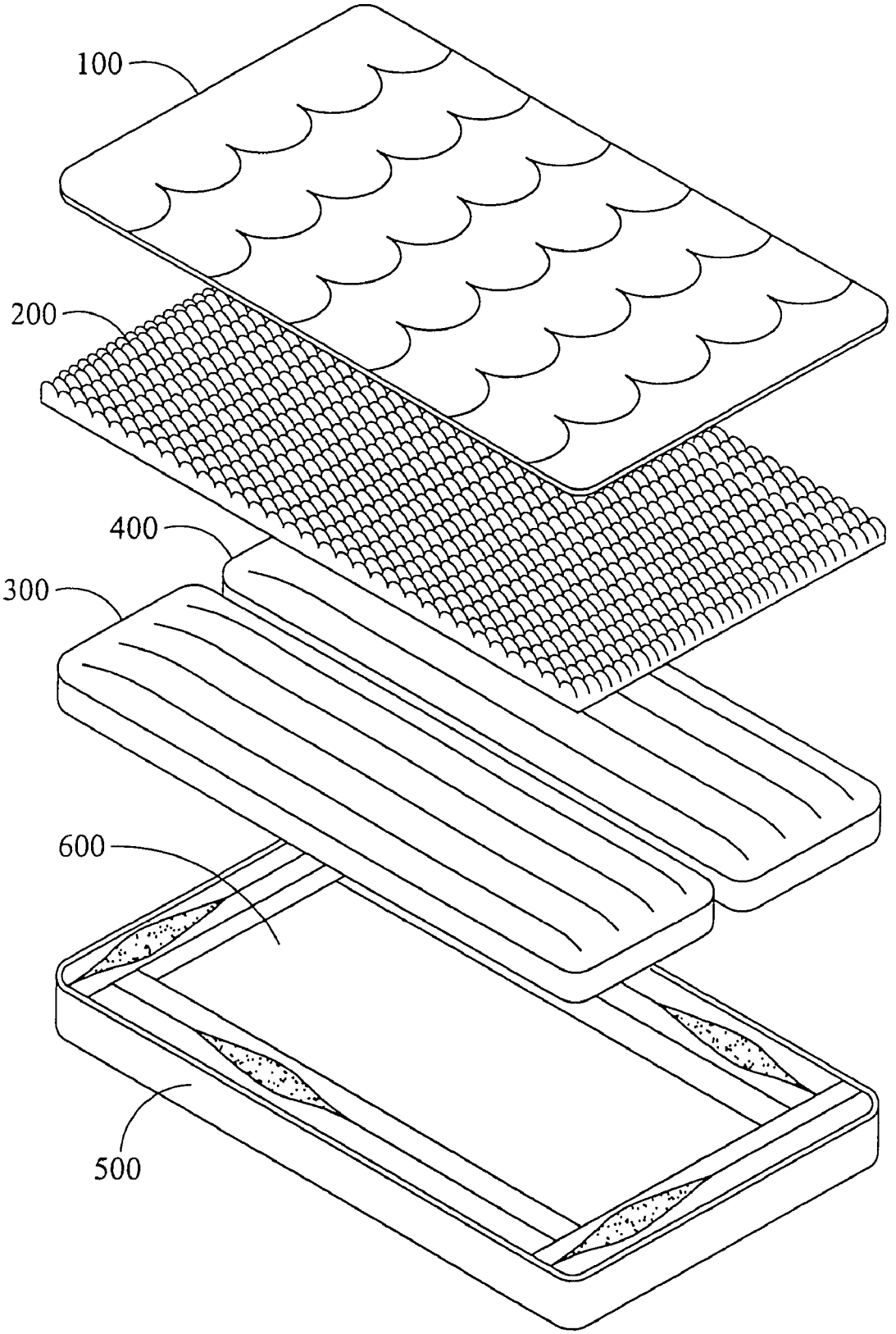

FIG. 11 (PRIOR ART)

INFLATABLE PRODUCT PROVIDED WITH ELECTRIC AIR PUMP

CROSS-REFERENCE TO RELATED APPLICATION

This application is a divisional of U.S. application Ser. No. 09/886,030, filed Jun. 22, 2001.

BACKGROUND OF THE INVENTION

1. Field of the Invention

The present invention relates in general to an inflatable product provided with an electric air pump.

2. Description of the Related Art

Referring to FIG. **11**, prior art provides a conventional air mattress for two people with a top fabric cover **100**, a layer of foam **200**, two inflatable chambers **300**, **400**, a frame **500** and a bottom fabric cover **600**. The inflatable chambers **300**, **400** are inflated by an electric air pump (not shown), which is separately provided, requiring users to carry two items, the air mattress itself, and an electric air pump. Inconvenience results, especially for outdoor use.

The present invention provides a modified air mattress, which has a built-in electric air pump eliminating the need for an external pump. Furthermore, operation of the air mattress of the present invention is easy.

SUMMARY OF THE INVENTION

An object of the present invention is to provide an air mattress, easily operated and conveniently carried.

In another embodiment of the invention, an inflatable product includes a first chamber, a pack, and a fan and motor received in the pack. The pack has an air intake connected to the outside of the first chamber and a first air outlet connected to the inside of the first chamber. A first valve for opening and closing the first air outlet is also provided, wherein the first valve is received in the pack. Air is pumped by the fan and motor from the outside of the first chamber through the air intake and the first valve and then into the first chamber from the first air outlet. The inflatable product may include a second chamber, in which case the pack is provided with a second air outlet connected to the second chamber so that the fan and motor pump air into the second chamber through the second air outlet. A second valve for opening and closing the second air outlet is preferably included. A two-way valve device may be connected between the first and second chamber so that the air in the first chamber flows into the second chamber through the two-way valve device.

A valve switch may be manually operated and include a cam element, a bar and a spring, the cam element rotatable between a first orientation and a second orientation. When the cam element is in the first orientation, the bar is depressed by the cam element, and the spring is compressed by the bar to open the first valve or the second valve. The cam element preferably has a recess, and when the cam element is in the second orientation, the bar is pushed by the spring and received in the recess to close the first valve or the second valve.

The air mattress of the present invention includes a chamber and an electric air pump for inflating the chamber. The air pump has an air intake and an air outlet. The air intake is connected to the outside of the chamber and the air outlet is connected to the inside of the chamber when the air pump is moved to first position. The air intake is connected to the inside of the chamber and the air outlet is connected to the outside of the chamber when the air pump is moved to second position.

BRIEF DESCRIPTION OF THE DRAWINGS

The present invention can be more fully understood by reading the subsequent detailed description and examples with references made to the accompanying drawings, wherein:

FIG. **1**A is a perspective diagram of an inflatable product in accordance with a first embodiment of the present invention;

FIG. **1**B is an expanded view of the inflatable product of the first embodiment of the present invention;

FIG. **1**C is an exploded diagram of the air pump and pump seat of FIG. **1**B;

FIG. **1**D is a schematic diagram of the air pump of the first embodiment during inflation;

FIG. **1**E is a schematic diagram of the air pump of the first embodiment during deflation;

FIG. **2**A depicts an air pump of a second embodiment of the present invention during inflation;

FIG. **2**B is a sectional view of FIG. **2**A along line II—II;

FIG. **2**C depicts the air pump of the second embodiment of the present invention during deflation;

FIG. **3**A depicts an air pump of a third embodiment of the present invention during inflation;

FIG. **3**B depicts the air pump of FIG. **3**A, with a part of the housing removed;

FIG. **3**C depicts the air pump of the third embodiment of the present invention during deflation;

FIG. **3**D depicts the air pump of FIG. **3**C, with a part of the housing removed;

FIG. **4**A is a perspective diagram of an inflatable product in accordance with a fourth embodiment of the present invention;

FIG. **4**B is an expanded view of FIG. **4**A;

FIG. **4**C is a sectional view of FIG. **4**B along line IV—IV;

FIG. **4**D is a schematic diagram of the cam element and bar of the valve switch of the fourth embodiment, where the valve switch is closed;

FIG. **4**E is a schematic diagram of the cam element and bar of the valve switch of the fourth embodiment, where the valve switch is opened;

FIG. **4**F depicts the air pump assembly of the fourth embodiment during inflation;

FIG. **4**G depicts the back support of the air mattress of the fourth embodiment, wherein the back support is filled with air;

FIG. **4**H depicts the deflated back support of the air mattress of FIG. **4**G;

FIG. **4**I depicts a modified example of the back support of the air mattress of the fourth embodiment, wherein the back support is filled with air;

FIG. **4**J depicts the deflated back support of the air mattress of FIG. **4**I;

FIG. **4**K depicts another modified example of the back support of the air mattress of the fourth embodiment, wherein the back support is filled with air;

FIG. **4**L depicts the deflated back support of the air mattress of FIG. **4**K;

FIG. **4**M depicts another modified example of the back support of the air mattress of the fourth embodiment, wherein the back support is filled with air;

FIG. **4**N depicts the deflated back support of the air mattress of FIG. **4**M;

FIG. **5**A is a perspective diagram of an inflatable product in accordance with a fifth embodiment of the present invention;

FIG. **5**B is an expanded view of FIG. **5**A;

FIG. **5**C is a back view of FIG. **5**B;

FIG. **6** depicts an inflatable product in accordance with a sixth embodiment of the present invention;

FIG. **7**A depicts an inflatable product in accordance with a seventh embodiment of the present invention;

FIG. **7**B depicts the first control pack of the inflatable product of FIG. **7**A;

FIG. **7**C depicts the second control pack of the inflatable product of FIG. **7**A;

FIGS. **7**D and **7**E depict the operation of the switch of the first control pack of FIG. **7**B;

FIG. **7**F depicts a control circuit for activating the air pump of FIG. **7**A;

FIG. **7**G depicts a modified control circuit of FIG. **7**F;

FIG. **8**A is a front view of the operating panel of the air pump assembly in accordance with an eighth embodiment of the present invention;

FIG. **8**B is the front view of the air pump assembly of FIG. **8**A, with the operating panel removed;

FIG. **8**C is a bottom view of FIG. **8**C;

FIG. **9**A depicts an inflatable product of a ninth embodiment of the present invention;

FIG. **9**B is an expanded view of the inflatable product of FIG. **9**A, during inflation;

FIG. **9**C is an expanded view of the inflatable product of FIG. **9**A, in stop mode;

FIG. **9**D is an expanded view of the inflatable product of FIG. **9**A, during deflation;

FIG. **10**A shows a modified inflatable umbrella of the ninth embodiment of the present invention;

FIG. **10**B is a perspective diagram of a fan assembly of FIG. **10**A;

FIG. **11** is an exploded perspective diagram of a conventional air mattress.

DETAILED DESCRIPTION OF THE PREFERRED EMBODIMENT

Referring to FIGS. **1**A and **1**B, an inflatable product of a first embodiment of the present invention has an inflatable chamber **10**, a pump seat **11** mounted on the chamber **10**, an air pump **12** carried by the pump seat **11**, two holding elements **13**, **13'** to hold the air pump **12**, and two covers **14**, **14'** for covering the vents **131**, **131'** provided on the holding elements **13**. Referring to FIG. **1**C, the seat **11** has two holes **111**, **112** on its bottom, through which air enters the chamber **10**. The air pump **12** has a substantially rolling-pin-shaped housing with a fan and motor (not shown) inside. An air intake **121** and an air outlet **122** are provided at opposite ends of the housing. The housing of the air pump **12** has a rib **123** on its outer surface, wherein the rib **123** extends in the axial direction of the housing. Referring to FIG. **1**D, the air pump **12** is carried by the seat **11** with the rib **123** resting on the seat **11**. Then, the holding elements **13** are screwed to the seat **11** for holding the air pump **12**.

During inflation, the air pump **12** pumps air into the inflatable product. Air flows through the vent **131** of the holding element **13**, the air intake **121** and air outlet **122** of the air pump **12**, and the hole **112** on the bottom of the seat **11**. Air then flows into the inflatable product via the hole **112** on the bottom of the seat **112**.

During deflation, the air pump **12** is rotated in direction X until the rib **123** rests on the seat **11** at another side. As shown in FIG. **1**E, the air intake **121** faces down and the air outlet **122** faces up so that the air pump **12** can pump air out of the inflatable product. Air flows through the hole **111** of the seat **11**, the air intake **121** and air outlet **122** of the air pump **12**, and then out from the vent **131'** of the holding element **13'**.

Referring to FIG. **2**A, an inflatable product of a second embodiment of the present invention is provided with a rotatable switch **21**, an air pump **22**, a piping system **23** and a cover **24**. On the top surface of the switch **21**, "INFLATE", "STOP" and "DEFLATE" settings appear. The air pump **22** is firmly connected to the switch **21**. The air pump **22** thus follows the switch **21**'s rotation when twisted. Referring to FIG. **2**B, the air pump **22** has a substantially rolling-pin-shaped housing **225** with a fan and motor **223** inside. An air intake **221** and an air outlet **222** are provided at opposite ends of the housing. The piping system **23** includes a main pipe **238**, two side pipes **236**, **237** and a vent **239**. The main pipe **238** is connected to the outside via the vent **239** and connected to the air pump **22** in the housing **225** via the side pipes **236**, **237**. The cover **24** is used to close the vent **239**.

During inflation, the switch **21** is rotated to "INFLATE". The air intake **221** is switched to connect the side pipe **236**, while the side pipe **237** is closed by the housing **225** of the air pump **22**. The air pump **22** pumps air into the inflatable product in accordance with a path as indicated by the arrows. In detail, air flows through the vent **239**, main pipe **238**, side pipe **236** and air intake **221**, and out from the air outlet **222**.

When inflation is finished, the user rotates the switch **21** to "STOP". The air pump **22** stops. Also, the air intake **221** and air outlet **222** are closed by the housing **225** of the air pump **22**.

During deflation, the switch **21** is rotated to "DEFLATE". As shown in FIG. **2**C, the air outlet **222** is switched to connect the side pipe **237**, while the side pipe **236** is closed by the housing **225** of the air pump **22**. The air pump **22** evacuates air from the inflatable product in accordance with a path as indicated by arrows. In detail, air flows through the air intake **221**, air outlet **222**, side pipe **237** and main pipe **238**, and out from the vent **239**.

Referring to FIGS. **3**A and **3**B, an inflatable product of a third embodiment of the present invention is provided with a housing **31**, a fan and motor **33**, a switching pipe **32**, a flap **36** and a cover **35**. The fan and motor **33** is received in the housing **31**. The flap **36** is firmly connected to the switching pipe **32**. Therefore, when the switching pipe **32** is rotated, the flap **36** follows. An air intake **311** and an air outlet **312** are provided on the top surface of the housing **31**, while another air intake **314** and air outlet **313** are provided on the bottom surface of the housing **31**. During inflation, the switching pipe **32** is connected to the air outlet **312** on the top surface of the housing **31**. The cover **35** is removed from the air intake **311**. The inflatable product (not shown) is inflated by the fan and motor **33**. Air flows through the air intake **311** and the air outlet **313**, and into the inflatable product.

Referring to FIGS. **3**C and **3**D, During deflation, the switching pipe **32** is switched from the air outlet **312** to the air intake **311** on the top surface of the housing **31**. Also, the flap **36** follows the switching pipe **32** to rotate to close the air outlet **313** on the bottom surface of the housing **31**. The air in the inflatable product is evacuated by the fan and motor **33**. The path of the airflow is indicated by arrows. Air flows through the air intake **314**, the switching pipe **32** and the air intake **311**, and into the housing **31**. Then, air flows out from the air outlet **312**.

Referring to FIG. **4**A, an inflatable product of a fourth embodiment of the present invention is an air mattress which includes a mattress pad **41** comprising a chamber wall **41**a, a back support **42** and an air pump assembly **43** built into the mattress pad **41** to inflate the mattress pad **41** and the back support **42**. The back support **42** is inflated to raise the backrest of the mattress pad **41**. Referring to FIGS. **4**B and **4**C, the air pump assembly **43** has a pack **430** comprising a pack wall **430**a exposed to the outside of the chamber, an interior region **430**b, a fan and motor **435** received in the pack **430**, a motor switch **433** mounted on the pack **430** to activate the fan and motor **435**, two valves **436**, **436'** disposed in the pack **430**, and two valve switches **431**, **431'** for opening/closing the valves **436**, **436'**. The pack **430** has an air intake **4301**, a first air outlet **4302** connected to the back support **42**, and a second air outlet **4302'** connected to the mattress pad **41**. The valve switches **431**, **431'** have the same structure. Therefore, only the valve switch **431** is introduced and the description of the valve switch **431'** is omitted. The valve switch **431** has a cap **4311**, a cam element **4312**, a bar **4313** and a spring **4314**. The cam element **4312** is firmly connected to the cap **4311**. When the cap **4311** is twisted, the cam element **4312** follows the cap **4311**'s rotation. Referring to FIG. **4**D, the cam element **4312** has a recess **4315** on its bottom, via which the cam element **4312** sits on the bar **4313**.

To inflate the back support **42**, the user turns on the motor switch **433** to activate the fan and motor **435**. In addition, the user turns on the valve switch **431** by twisting the cap **4311**. The cam element **4312** follows the cap **4311**'s rotation as shown in FIG. **4**D. Then, the bar **4313** is depressed by the cam element **4312** as shown in FIG. **4**E. Referring to FIG. **4**F, the spring **4314** is compressed by the bar **4313** and the valve **461** is opened. Then, outside air is pumped into the back support **42** through the air intake **4301** and air outlet **4302** of the air pump assembly **43**. Arrows indicate the path of airflow.

If the user further turns on the valve switch **431'**, then the mattress pad **41** is inflated.

Referring to FIG. **4**G, the back support **42** is inflated to raise the backrest of the mattress pad **41**. Referring to FIG. **4**H, the backrest of the mattress pad **41** is lowered when the back support **42** is deflated. It is noted that the cross section of the back support **42** is V-shaped. By such an arrangement, the mattress pad **41** is flat enough that a user cannot detect the presence of the deflated back support **42**.

FIGS. **4**I and **4**J depict a modified example of the back support of the air mattress, wherein the back support **44** has a flexible chamber **442** of a triangular cross section and an elastic string **441** binding the chamber **442**. When the chamber **442** is filled with the air, the elastic string **44** is stretched. When the chamber **442** is deflated, the elastic string **44** automatically contracts to collapse the chamber **442**.

FIGS. **4**K and **4**L depict another modified example of the back support of the air mattress, wherein the back support **46** has a flexible chamber **464**, a frame **463** pivoted to the mattress pad **47** and connected to the chamber **464**, an elastic string **461** fixed to the frame **463** for binding the chamber **464**, and round slider **462** mounted on the bottom of the frame **463**. When the chamber **464** is filled with air, the elastic string **461** is stretched. When the chamber **464** is deflated, the elastic string **461** automatically contracts to collapse the chamber **464**. Then, the chamber **464** pulls the frame **463**. The frame **463** slides on the ground via the round sliders **462** and rotates toward the mattress pad **47** to collapse the chamber **464**.

FIGS. **4**M and **4**N depict another modified example of the back support of the air mattress, wherein the back support **48** has a flexible chamber **481**, a first frame **483**, a second frame **484** hinged to the first frame **483**, and an elastic string **482** fixed to the frames **483**, **484** to bind the chamber **481**. The flexible chamber **481** is sandwiched between the frames **483**, **484**. When the chamber **464** is filled with air, the elastic string **461** is stretched and the frames **483**, **484** are spread. When the chamber **464** is deflated, the elastic string **461** automatically contracts to collapse the chamber **464**. Also, the frames **483**, **484** are closed to collapse the chamber **481**.

Referring to FIG. **5**A, an inflatable product of a fifth embodiment of the present invention includes two inflatable chambers **51**, **52**, an air pump assembly **53** and a two-way valve device **54**. The air pump assembly **43** is used to inflate the chambers **51** and **52** via the two-way valve device **54**, wherein the two-way valve device **54** is connected to the chamber **52** via a pipe **55**. Also referring to FIGS. **5**B and **5**C, the air pump assembly **53** has a motor switch **533** and an air intake **531** on its front surface, and an air outlet **532** on its rear surface. The two-way valve device **54** has a valve switch **543** on its front surface, an air intake **541** and an air outlet **542** on its rear surface. During inflation, the user turns on the motor switch **533** to pump air into the chamber **51** through the air intake **531** and air outlet **532**. To further inflate the chamber **52**, the valve switch **54** is turned on so that air in the chamber **51** flows into the chamber **52** through the two-way valve device **54**.

Referring to FIG. **6**, an inflatable product of a sixth embodiment of the present invention includes two inflatable chambers **61**, **62** and an air pump assembly **63**. The air pump assembly **63** inflates the chambers **61**, **62** via two check valves **64**, **65**, respectively. The air pump assembly **63** has a fan and motor **633**, a valve switch **631** and a cantilever arm **632** connected to the valve switch **631**. To inflate the chamber **61**, the user twists the valve switch **631** so that the cantilever arm **632** depresses the valve **64**. The valve **64** is thus opened. Arrows indicate the path of airflow. Similarly, the user twists the valve switch **631** to open the valve **65** by the cantilever arm **632**, when the chamber **62** is inflated.

Referring to FIG. **7**A, an inflatable product of a seventh embodiment of the present invention includes four inflatable chambers **711**, **712**, **713**, **714**, an air pump **72**, a first control pack **73** for controlling the air pump **72** to inflate the chambers **711**, **712**, and a second control pack **74** for controlling the air pump **72** to inflate the chambers **713**, **714**. Referring to FIG. **7**B, the first control pack **73** has a pack body **730**, two switches **731**, **732**, an air intake **733** connected to the air pump **72** and two air outlets **734**, **735** respectively connected to the chambers **712**, **711**. Referring to FIG. **7**C, the second control pack **74** has the same structure as the first control pack **73**. The second control pack **74** has a pack body **740**, two switches **741**, **742**, an air intake **743** connected to the air pump **72** and two air outlets **744**, **745** respectively connected to the chambers **713**, **714**. Referring to FIG. **7**D, the switch **731** is connected to a valve **7311** while a micro switch **7312** is provided beside the switch **731**. When the switch **731** is rotated to the "INFLATE" position, the valve **7311** is opened and the micro switch **7312** is turned on as shown in FIG. **7**E. Other switches **732**, **741**, **742** have the same structure as the switch **731**, thereby having micro switches beside. Further referring to FIG. **7**F, when any of the micro switches **7312**, **7322**, **7412**, **7422** is turned on, a relay **75** is activated and turned on. Then, the air pump **72** is supplied with power to inflate the corresponding chambers **711**, **712**, **713**, **714**.

FIG. **7**G depicts a modified control circuit of FIG. **7**F, wherein reference numerals **7312'**, **7322'**, **7412'**, **7422'** represent air bulbs instead of micro switches. When any of the air bulbs **7312'**, **7322'**, **7412'**, **7422'** is pressed, a pressure switch **75'** is turned on. Then, the air pump **72** is supplied with power to inflate the corresponding chambers **711**, **712**, **713**, **714**.

FIGS. **8**A, **8**B and **8**C show an air pump assembly in accordance with an eighth embodiment of the present invention, wherein FIG. **8**A is the front view of the operating panel of the air pump assembly, FIG. **8**B is the front view of the air pump with the operating panel removed, and FIG. **8**D is a bottom view of FIG. **8**C. The air pump assembly includes a pack **81** with a vent **811** on its top and two vents **812**, **813** on its bottom, a fan and motor **82** received in the pack **81**, two valves **83**, **84** for opening/closing the vents **812** and **813**, two switches **85**, **86** and an elongated slider **87** provided beside the switches **85**, **86**. The elongated slider **87** has two slots **876**, **877** with pins **872**, **873** received inside, while the pins **872**, **873** are firmly fixed in the pack **81**. By the arrangement, the slider **87** is slideable with respect to the pins **872**, **873**. Furthermore, the fan and motor **82** have two pairs of electrodes **824**, **824'** and **825**, **825'**. The electrodes **824'**, **825** are fixed to the pack **81**, while the electrodes **824**, **825'** are firmly connected to the slider **87**. When the slider **87** is moved to the right, the pair of electrodes **824**, **824'** physically contact each other. Then, the fan and motor **82** is activated to rotate in a normal direction. When the slider **87** is moved to the left, the pair of electrodes **825**, **825'** physically contact each other. Then, the fan and motor **82** is activated to rotate in a reverse direction. Furthermore, the switches **85**, **86** have ears **851**, **852**, **861**, **862** to push the slider **87** in different directions.

During inflation, the switch **85**, for example, is rotated to "INFLATE". The valve **83** connected to the switch **85** is opened. Meanwhile, the ear **851** of the switch **85** pushes against the slider **87** so that the pair of electrodes **824**, **824'** physically contact each other. Thus, the fan and motor **82** is activated to pump air from the top vent **811** to the bottom vent **812**. When the switch **85** is rotated to "DEFLATE", the valve **83** is opened. The ear **852** of the switch **85** pushes against the lever **871** so that the pair of electrodes **825**, **825'** contact each other and the pair of electrodes **824**, **824'** separate. Then, the fan and motor **82** operates in reverse to pump air from the bottom vent **812** to the top vent **811**. Similarly, air is pumped from the top vent **811** to the bottom vent **813** when the switch **86** is rotated to "INFLATE". On the other hand, air is pumped from the bottom vent **813** to the top vent **811** when the switch **86** is rotated to "DEFLATE".

Referring to FIG. **9**A, an inflatable product of a ninth embodiment of the present invention is an umbrella. The umbrella has a stiff handle **91** and an inflatable (flexible) shank **92**. An air pump is arranged in the handle **91** to pump the inflatable shank **92**. The air pump has a nozzle **95**, bellows **94** for supplying the shank **92** with air via the nozzle **95**, and a motor **93** for operating the bellows **94** via gears **901** and a link **902**. Furthermore, a ring switch **99** is provided around the handle **91** to activate the motor **93**. In addition, three check valves **96**, **97**, **98** are provided to control the airflow. The first check valve **97** for controlling the entrance of air into the bellows **94** is provided under the ring switch **99**. The second check valve **96** for controlling the exit of air from the inflatable shank **92** is provided over the ring switch **99**. The third check valve **98** is provided between the bellows **94** and the nozzle **95** for controlling the airflow from the bellows **94** to the shank **92**.

On the top and bottom of the ring switch **99** are provided a plurality of recesses. Referring to FIG. **9**B, During inflation, the ring switch **99** is rotated to such a position that a top recess **991** of the ring switch **99** is positioned under the check valve **96**, allowing the check valve **96** to be closed. Meanwhile, the check valve **97** is opened by the bottom of the ring switch **99**. Also, a bottom recess **992** of the ring switch **99** is positioned over the button **931** of the motor **93** to release the button **931**. Then, the motor **93** operates the bellows **94** via the gears **901** and link **902**. Outside air is pumped into the shank **92** through the check valves **97**, **98**. The path of airflow is indicated by arrows.

To stop the inflating operation, the user rotates the ring switch **99** to the position shown in FIG. **9**C, wherein the top recess **991** of the ring switch **99** is still positioned under the check valve **96** so that the check valve **96** is closed. Another bottom recess **994** of the ring switch **99** is positioned over the check valve **97** so that the check valve **97** is closed. Also, the bottom of the ring switch **99** pushes the button **931** to stop the motor **93**.

To deflate the umbrella, the user rotates the ring switch **99** to the position shown in FIG. **9**D, wherein the bottom recess **994** of the ring switch **99** is still positioned over the check valve **97** so that the check valve **97** is closed. The bottom of the ring switch **99** continues pushing the button **931** so that the motor **93** is still at rest. The top of the ring switch **99** pushes the check valve **96** so that the check valve **96** is opened. Then, air in the shank **92** of the umbrella automatically flows out through the check valve **96**.

FIGS. **10**A and **10**B show a modified inflatable umbrella, wherein the air pump of the ninth embodiment including the bellows **94**, link **902**, gears **901** and motor **93** are replaced with another kind of air pump **150**. The air pump **150** includes a cylindrical reservoir **151**, a fan (air pressure rotator) **155** eccentrically received in the reservoir **151**, and a motor **154** provided outside the reservoir **151** to rotate the fan **155**. The reservoir **151** has an air intake **152** connected to the first check valve **97** and an air outlet **153** connected to the third check valve **98**. During operation, air is pumped into the reservoir **151** through the air intake **152** and then pumped out through the air outlet **153**. Furthermore, it is noted that the fan **155** is eccentrically arranged in the reservoir **151**. This fan assembly generates sufficient air pressure to inflate the umbrella.

While the invention has been described by way of example and in terms of the preferred embodiment, it is to be understood that the invention is not limited to the disclosed embodiments. To the contrary, it is intended to cover various modifications and similar arrangements (as would be apparent to those skilled in the art). Therefore, the scope of the appended claims should be accorded the broadest interpretation so as to encompass all such modifications and similar arrangements.

What is claimed is:

1. An inflatable product, including:

a first chamber comprising a chamber wall;

a pack having an interior region, an air intake communicating the interior region to the outside of the first chamber and a first air outlet communicating the interior region to the inside of the first chamber, wherein the pack is built in the chamber wall and extends into an interior of the first chamber;

a first valve for opening and closing the first air outlet, wherein the first valve is connected to the pack; and

a fan and motor disposed in the interior region of the pack, wherein, on activation of the fan and motor to inflate the first chamber, air is pumped from outside of the first

chamber through the air intake into the interior region of the pack, then through the first valve and first air outlet into the first chamber.

2. The inflatable product as claimed in claim **1**, further including a second chamber, and the pack further having a second air outlet communicating the interior region of the pack to the second chamber, wherein, on activation of the fan and motor to inflate the second chamber, air is pumped into the second chamber through the second air outlet.

3. The inflatable product as claimed in claim **2**, further including a second valve for opening and closing the second air outlet.

4. The inflatable product as claimed in claim **3**, further including a valve switch to selectively open the first valve or the second valve.

5. The inflatable product as claimed in claim **4**, wherein the valve switch comprises a cantilever arm, and the cantilever arm is rotated to selectively depress the first valve or the second valve for selectively opening the first valve or the second valve.

6. The inflatable product as claimed in claim **1**, further including a second chamber and a two-way valve device connected between the first and second chamber so that the air in the first chamber flows into the second chamber through the two-way valve device.

7. The inflatable product as claimed in claim **1**, further including a valve switch to open the first valve.

8. The inflatable product as claimed in claim **7**, wherein the valve switch includes a cam element, a bar and a spring, the cam element is rotatable between a first orientation and a second orientation, and when the cam element is in the first orientation, the bar is depressed by the cam element, and the spring is compressed by the bar to open the first valve.

9. The inflatable product as claimed in claim **8**, wherein the cam element has a recess, and when the cam element is in the second orientation, the bar is pushed by the spring and received in the recess to close the first valve.

10. The inflatable product as claimed in claim **7**, wherein the valve switch includes a spring, the valve switch is moveable between a first orientation and a second orientation, and when the valve switch is in the first orientation, the spring is compressed to open the first valve.

11. The inflatable product as claimed in claim **1**, wherein the first valve is a two-way valve.

12. The inflatable product as claimed in claim **1**, wherein the first valve is arranged to allow manual opening and closing of the first air outlet.

13. The inflatable product as claimed in claim **1**, wherein the pack comprises a pack wall exposed to the outside of the first chamber, and the air intake communicates the outside of the first chamber to the interior region of the pack through the pack wall.

14. The inflatable product as claimed in claim **13**, further comprising a control switch to activate the motor, wherein the control switch is disposed on the pack wall.

* * * * *