US 20060265810A1

(19) United States

(12) Patent Application Publication

(10) Pub. No.: US 2006/0265810 A1

(43) Pub. Date: Nov. 30, 2006

Wu

(54) INFLATABLE AIR MATTRESS PULL BAND

(76) Inventor: **Hsin-Tsai Wu**, Taipei City (TW)

Correspondence Address:
LEONG C LEI
PMB # 1008
1867 YGNACIO VALLEY ROAD
WALNUT CREEK, CA 94598 (US)

(21) Appl. No.: **11/138,329**

(22) Filed: **May 27, 2005**

Publication Classification

(51) **Int. Cl.**
A47C 27/08 (2006.01)

(52) **U.S. Cl.** **5/712**

(57) **ABSTRACT**

A pull band for an inflatable air mattress particularly of medium and large sizes to provide for the mattress excellent elongation and self-balanced mechanism is divided into an upper and a lower portions to respectively jointed to the upper and the lower perimeters of the mattress in symmetric, corresponding and inverse fashion to form an enclosure for providing pull strength to regulate the form of and to support the mattress; the band yielding support for the mattress saturated with the air to effectively cope with external pressure for maintaining in shape; and the mattress being automatically restored to its shape once the external pressure is released.

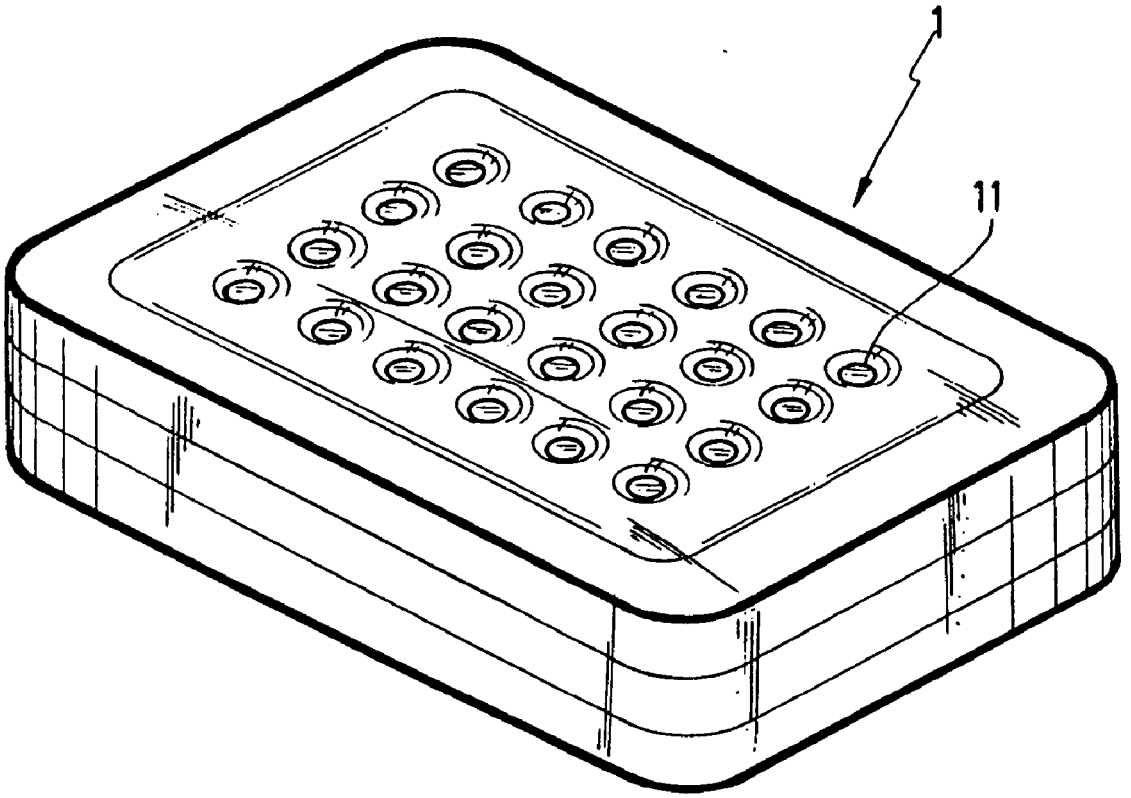

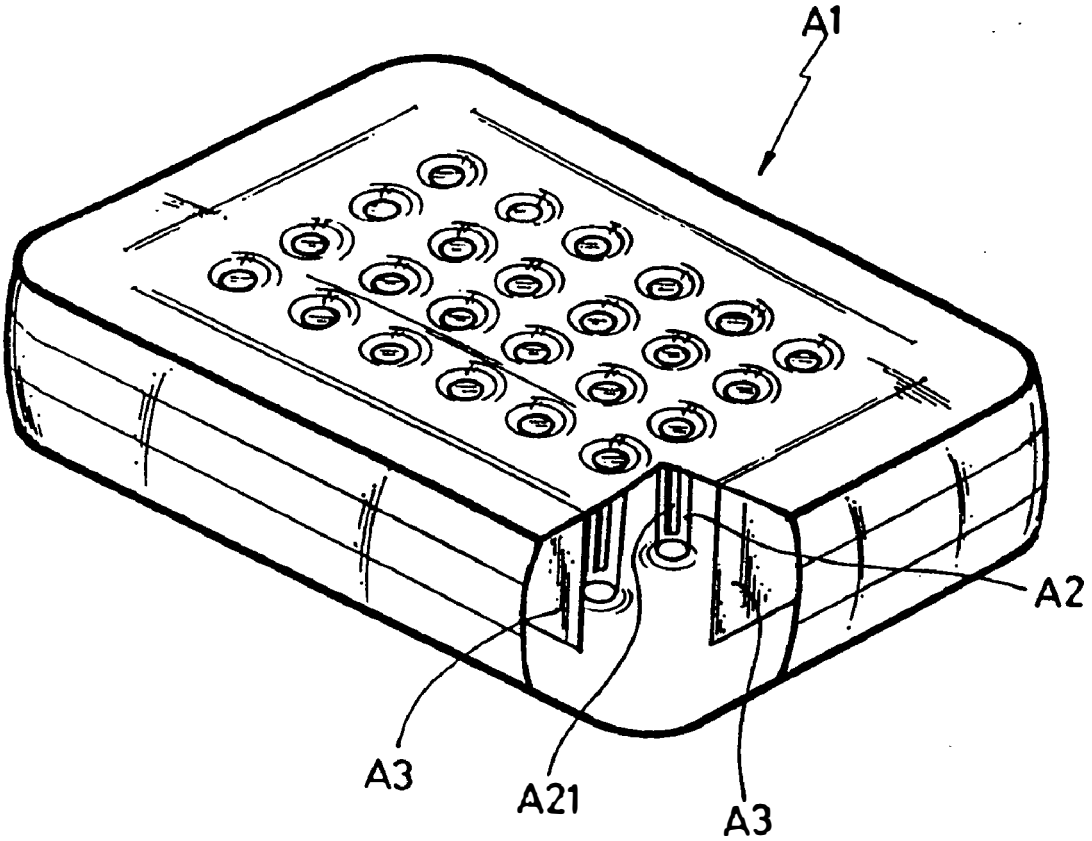

PRIOR ART

FIG.1

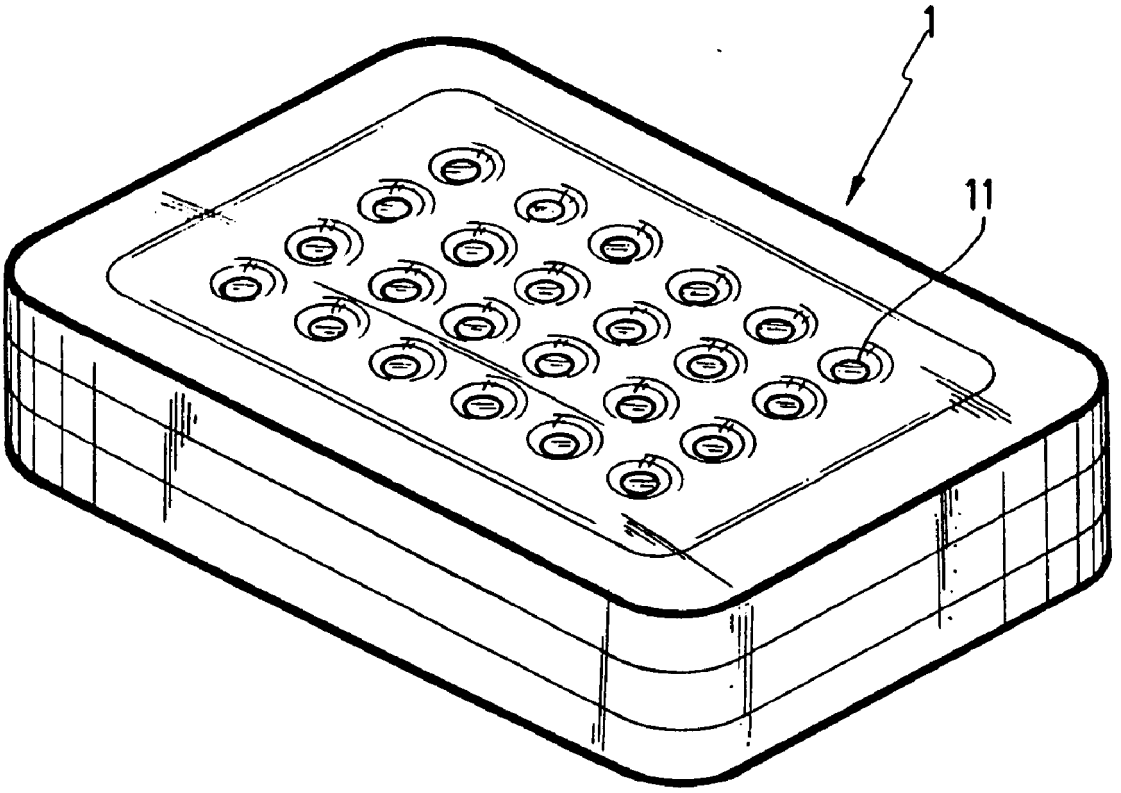

FIG.2

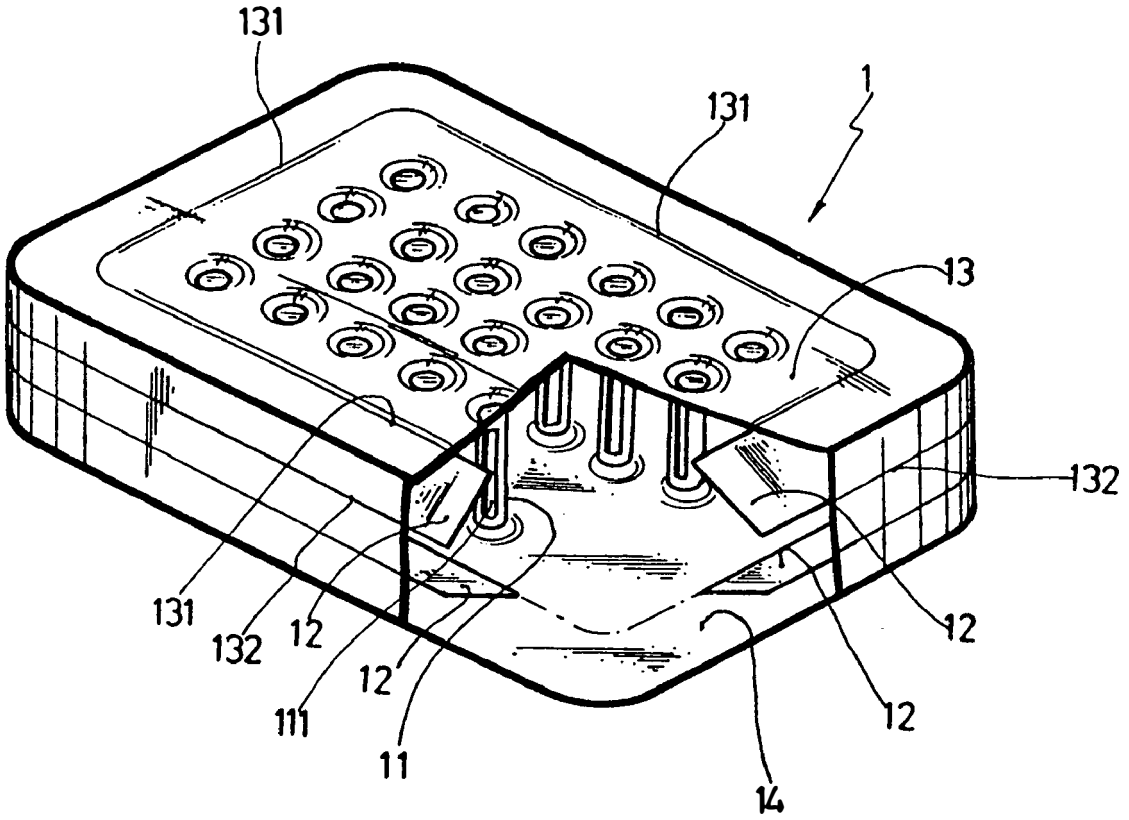

FIG.3

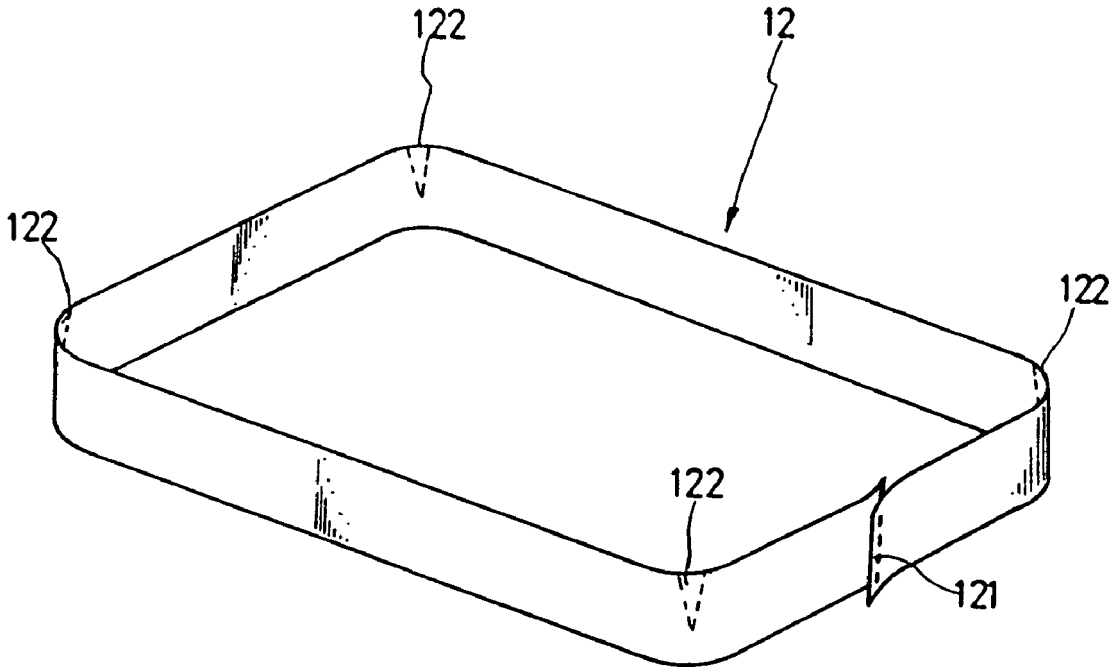

FIG.4

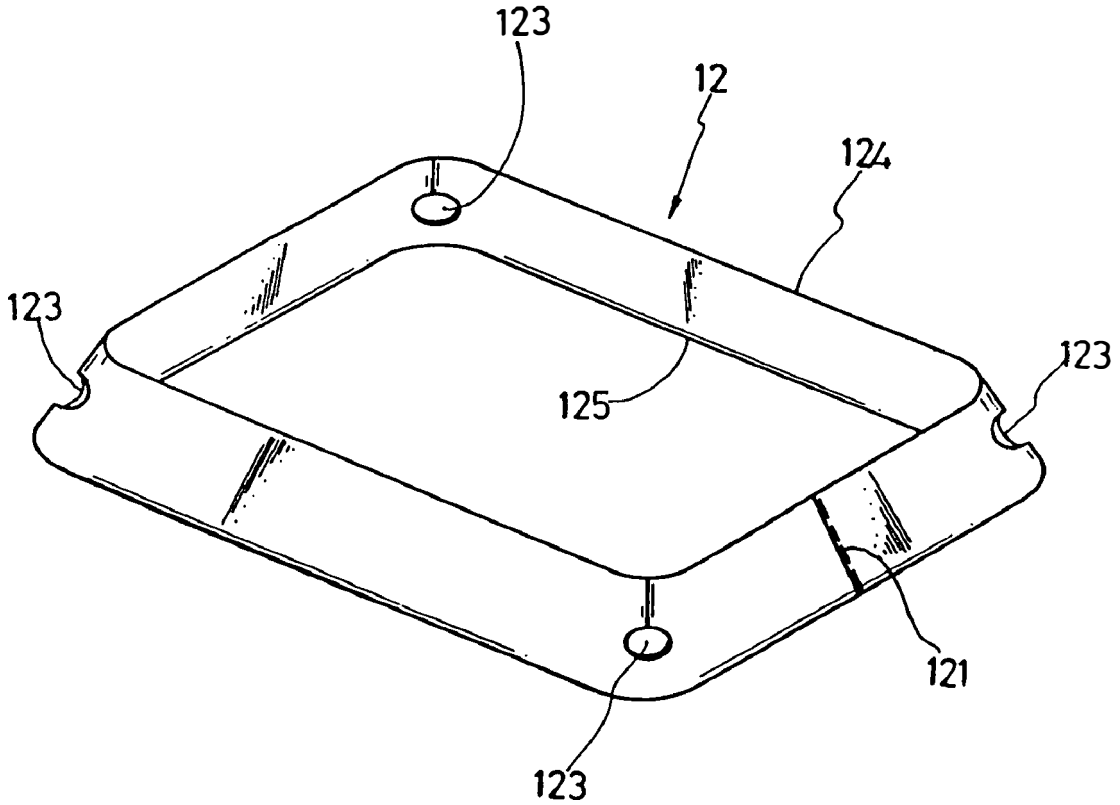

FIG.5

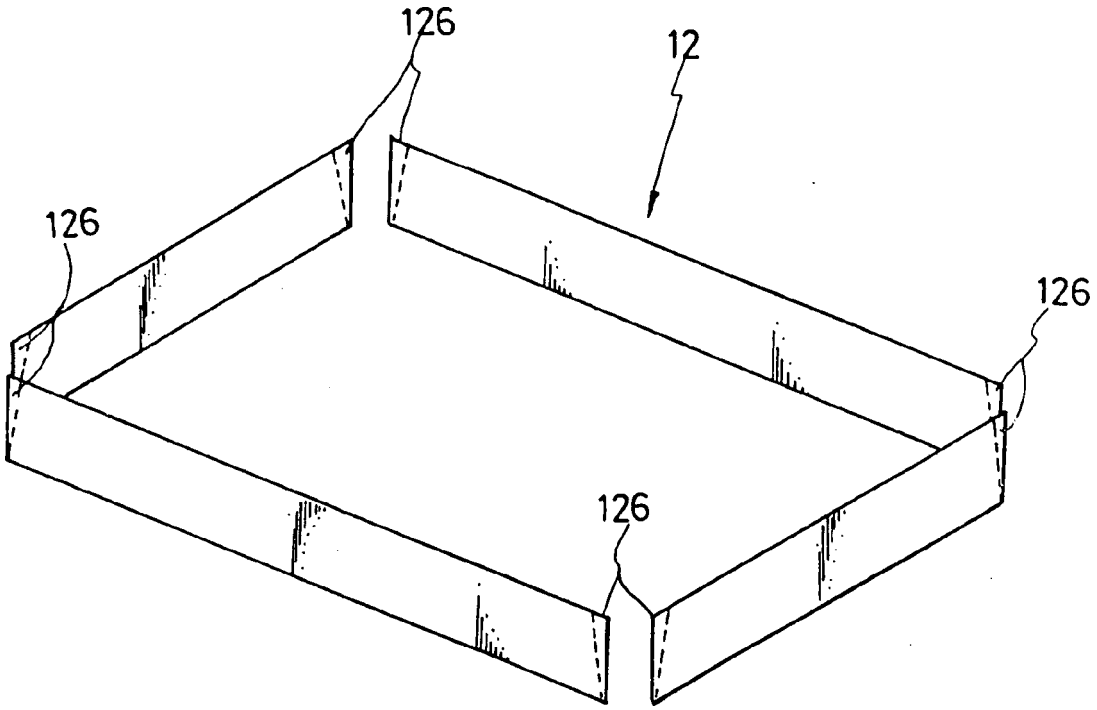

FIG.6

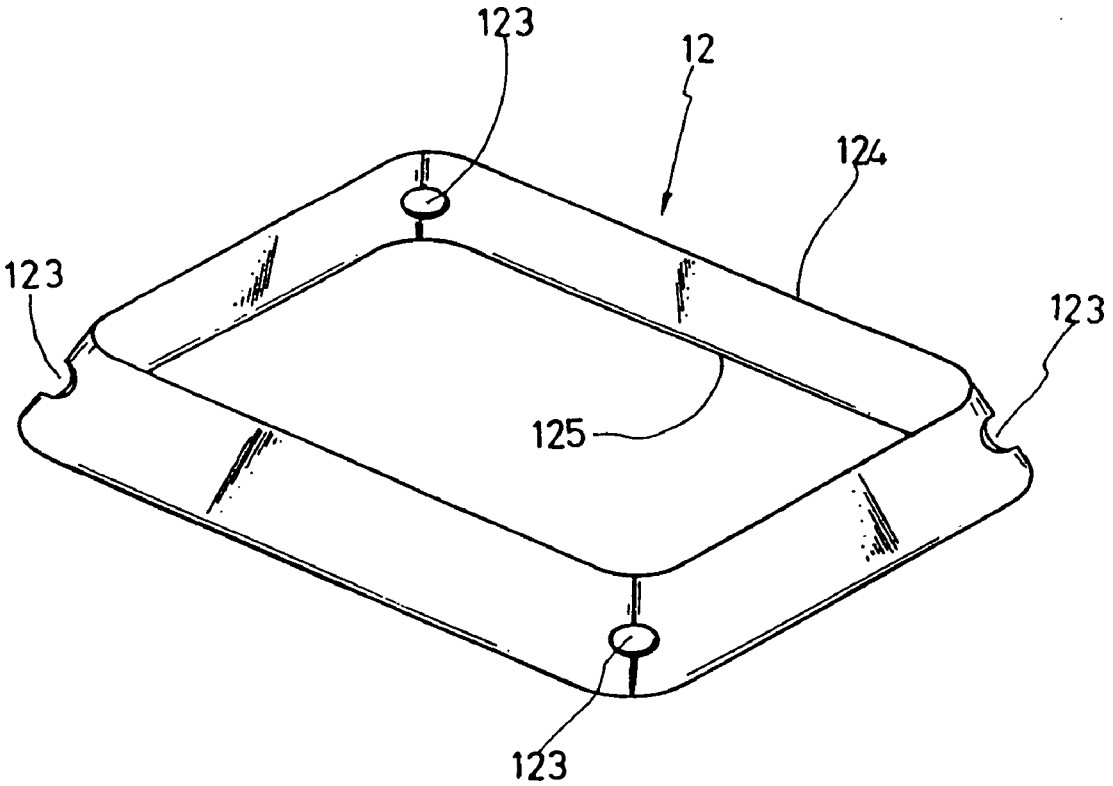

FIG.7

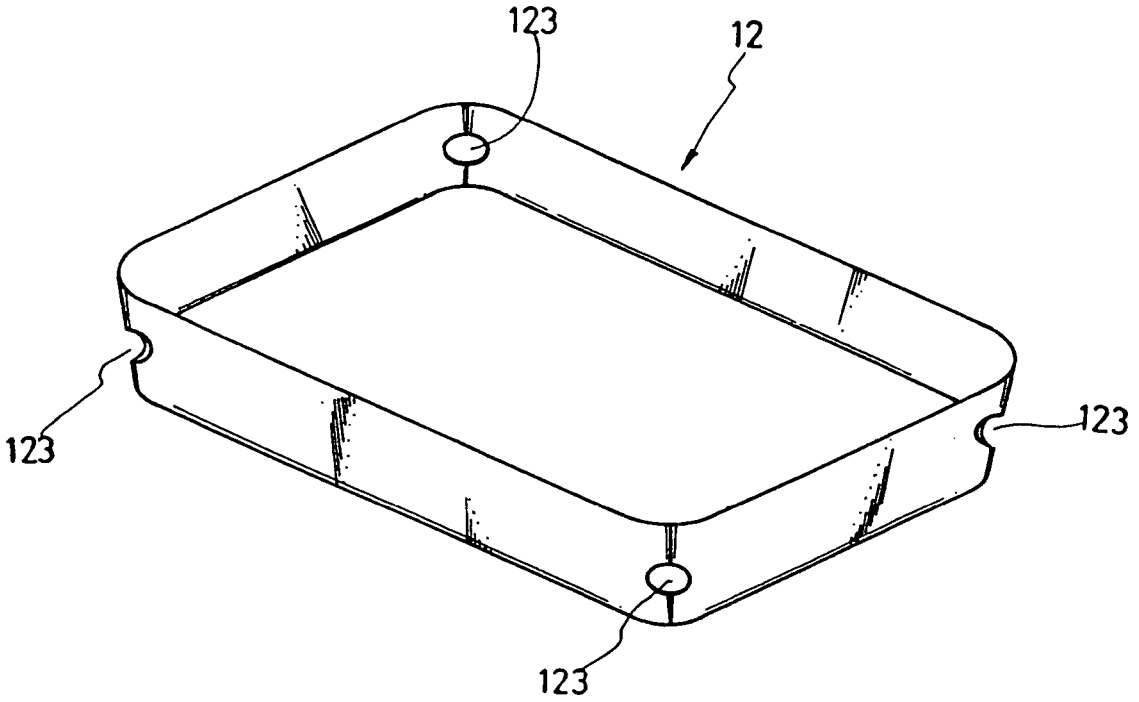

FIG.8

INFLATABLE AIR MATTRESS PULL BAND

BACKGROUND OF THE INVENTION

[0001] (a) Technical Field of the Invention

[0002] The present invention is related to a pull band for an inflatable air mattress of medium or large size, and more particularly to one that provides an excellent elongation and automatic restoration mechanism.

[0003] (b) Description of the Prior Art

[0004] Whereas most of inflatable products generally available in the market are for entertaining, sports and leisure activities, the product is inflated without compromising its handy and lightweight features to operate on land or surface.

[0005] An inflatable air mattress (A1) of the prior art as illustrated in **FIG. 1** of the accompanying drawings having been introduced into the market for many years contains multiple pull rings (A2) and a pull band (A3), both being critical to whether the mattress (A1) maintains its shape in use or not. Those pull rings (A2) are arranged in a check fashion and each is disposed with an air vent channel (A21) to provide air convection between them and the mattress (A1). The primary purpose, however, of those pull rings (A2) is to prevent the inflated mattress (A1) from becoming a spherical shape by maintaining the top and the bottom of the mattress (A1) in parallel to each other.

[0006] To improve pull strength on four sides of the mattress (A1) and keep it in a fixed form, four pull bands (A3) are provided in the mattress (A1) to respectively lay flushed against four sides of the mattress (A1) to provide traction for its top and the bottom. Accordingly, four sides of the mattress (A1) are prevented from bulging and the mattress (A1) is kept in a consistent form.

[0007] As illustrated in **FIG. 1**, a band (A3) is comprised of four individual sections (A3), two identical shorter sections and two identical longer sections. Those four sections (A3) of the band (A3) directly and vertically connect the top and the bottom of the mattress (A1) to provide traction mechanism by vertical link. However, the prior art of the band is found with the following flaws:

[0008] 1. Whereas the band (A3) inside the mattress (A1) are divided into four sections to respectively provide traction for two shorter and two longer sides of the mattress (A1), the traction forces exerted are naturally unbalanced; and four corners of the mattress (A1) tend to bulge due to the absence of the pull strength. Eventually, the mattress (A1) is not properly aligned.

[0009] 2. Whereas the band (A3) inside the mattress (A1) directly and vertically connects the top and the bottom of the mattress (A1), such application of force is referred as a linear pull force in dynamics. Therefore, once the mattress (A1) is inflated, there is the absence of traction on the tope edge and sidewalls of the mattress (A) to pop up to negatively affect the appearance of the entire mattress.

[0010] 3. For the same reason given in the preceding subparagraph 2, the force from the band (A3) is only applied to the inner edge perimeter, resulting in protruded deformation on the circumference of the mattress to significantly compromise the resilience and comfort of the mattress as it is directly related to the balanced pressure and stabilizing effect of the mattress.

SUMMARY OF THE INVENTION

[0011] The primary purpose of the present invention is to provide an improved construction of the pull band in the inflated air mattress that eliminates those flaws found with the prior art. To achieve the purpose, the band of the present invention is made in an integral enclosure as a breakthrough in solving the problem of deformation at four corners of the mattress. Meanwhile, the band is linked either as an entire piece or by section at a certain inclination to guide the pull and the traction otherwise on the top to the sides of the mattress in forming a perfect integrated traction not only to reduce the deformation when the mattress is inflated but also to give automatic restoration for the shape of the mattress. Furthermore, as the mattress is well balanced and stabilized, it offers the optimal resilience and comfort to sleep on.

[0012] The foregoing object and summary provide only a brief introduction to the present invention. To fully appreciate these and other objects of the present invention as well as the invention itself, all of which will become apparent to those skilled in the art, the following detailed description of the invention and the claims should be read in conjunction with the accompanying drawings. Throughout the specification and drawings identical reference numerals refer to identical or similar parts.

[0013] Many other advantages and features of the present invention will become manifest to those versed in the art upon making reference to the detailed description and the accompanying sheets of drawings in which a preferred structural embodiment incorporating the principles of the present invention is shown by way of illustrative example.

BRIEF DESCRIPTION OF THE DRAWINGS

[0014] **FIG. 1** is a schematic view of the prior art with a cutaway.

[0015] **FIG. 2** is a perspective view of a preferred embodiment of the present invention.

[0016] **FIG. 3** is a schematic view of the preferred embodiment with a cutaway of the present invention.

[0017] **FIG. 4** is a schematic view showing a construction of the pull band of the present invention.

[0018] **FIG. 5** is schematic view showing another construction of the pull band of the present invention.

[0019] **FIG. 6** is a schematic view showing a construction of another preferred embodiment of the present invention.

[0020] **FIG. 7** is a schematic view showing a construction of another preferred embodiment yet of the present invention.

[0021] **FIG. 8** is a schematic view showing an outwardly inclined construction of a lower pull band of the present invention.

DETAILED DESCRIPTION OF THE PREFERRED EMBODIMENTS

[0022] The following descriptions are of exemplary embodiments only, and are not intended to limit the scope,

applicability or configuration of the invention in any way. Rather, the following description provides a convenient illustration for implementing exemplary embodiments of the invention. Various changes to the described embodiments may be made in the function and arrangement of the elements described without departing from the scope of the invention as set forth in the appended claims.

[0023] Referring to **FIGS. 2 and 3**, an inflatable air mattress (**1**) is essentially comprised of multiple pull rings (**11**) arranged in a check fashion and an enclosure of pull band (**12**). The pull ring (**11**) similar to that of the prior art is provided with an air vent channel (**111**) and connects the top (**13**) and the base (**14**) of the mattress (**1**) to define it a basic configuration. The pull band (**12**) as illustrated in **FIG. 3** surrounds and connects an inner perimeter (**131**) of the top (**13**) at a certain inclination to become, together with a girder (**132**) of the top (**13**), an oblique traction band to secure the configuration of the mattress (**1**).

[0024] As illustrated in **FIGS. 4 and 5**, the band (**12**) is comprised of a complete strip enclosed to fence the inner space defined by the top (**13**) and the perimeter (**131**) of the top (**13**) before having both ends of the band (**12**) jointed in position. Four rounded corners (**122**) of the band (**12**) are further jointed in a triangle where a circular or an oval air vent channels (**123**) is disposed to give the band (**12**) an outwardly inclined configuration as illustrated in **FIG. 5**.

[0025] In the outwardly inclined configuration of the band (**12**), a plane defined by a perimeter of the top edge of the band (**12**) is smaller in size than that by the base of the band (**12**). Accordingly, a smaller top edge perimeter (**124**) of the band (**12**) is connected to the perimeter of the top (**13**) while the greater base perimeter (**125**) is connected to the girder (**132**) of the top (**13**) to define a built-in inclined configuration for the band (**12**) for providing pull as an enclosure.

[0026] Now referring to **FIGS. 6 and 7**, the enclosure of the band (**12**) is done by section. Wherein, two sides (**126**) of each section of the band (**12**) are jointed in oblique for the entire band (**12**) to indicate inclined configuration inwardly or outwardly as illustrated in **FIG. 8**.

[0027] As illustrated in **FIG. 3**, the present invention is applied in a multi-layer inflatable air mattress (**1**) by dividing the band (**12**) into an upper portion and a lower portion. The upper portion of the band (**12**) is respectively jointed to the inner perimeter (**131**) of the mattress and the girder (**132**). As extended, the lower portion of the band (**12**) is made in a configuration corresponding to and in symmetry with that of the upper portion of the band (**12**) but arranged in a fashion of inverse inclination to respectively joint to a lower girder (**133**) of the mattress and an inner perimeter (**134**) to provide the mattress (**1**) the traction between the upper and the lower layers, thus to be further applied to the multi-layer inflatable air mattress to provide interlayer traction mechanism.

[0028] It will be understood that each of the elements described above, or two or more together may also find a useful application in other types of methods differing from the type described above.

[0029] While certain novel features of this invention have been shown and described and are pointed out in the annexed claim, it is not intended to be limited to the details above, since it will be understood that various omissions, modifications, substitutions and changes in the forms and details of the device illustrated and in its operation can be made by those skilled in the art without departing in any way from the spirit of the present invention.

I claim:

1. A pull band in an inflatable air mattress is essentially comprised of multiple built-in pull rings and a pull band; wherein the band related to an enclosure of an integral strip in an inclined configuration; an air vent channel being provided at four rounded corners of the band; the upper perimeter of the top edge of the band being shorter than that of the bottom edge of the band; the upper perimeter of the band being jointed to the inner perimeter of the mattress; and the lower perimeter of the band being jointed to that of the girder of the bank to provide traction by inclined joint.

2. The pull band in the inflatable air mattress of claim 1, wherein both ends are jointed to form the enclosure; four rounded corners are jointed in a triangle; and each joint is provided with an air vent channel to give the inclined configuration to the band.

3. The pull band in the inflatable air mattress of claim 1, wherein the enclosure of the band is broken into two identical shorter sections and two identical longer sections that are jointed to one another; each joint is made in an inclined fashion; four rounded corners being each provided with an air vent channel and indicating the same inclined fashion as that of the band.

4. The pull band in the inflatable air mattress of claim 1, wherein the band is applied to a multi-layer inflatable air mattress; the band being arranged in an internally or externally inclined configuration; the band being divided into an upper portion and a lower portion; both portions being respectively jointed to the inner perimeter and the upper girder of the mattress as well as the lower girder and the base perimeter of the mattress in symmetric, corresponding and inverse fashion to provide traction among the layers.

* * * * *