Jan. 3, 1950 L. J. GOLDSMITH 2,493,067

MATTRESS

Filed Sept. 8, 1945

FIG. 1.

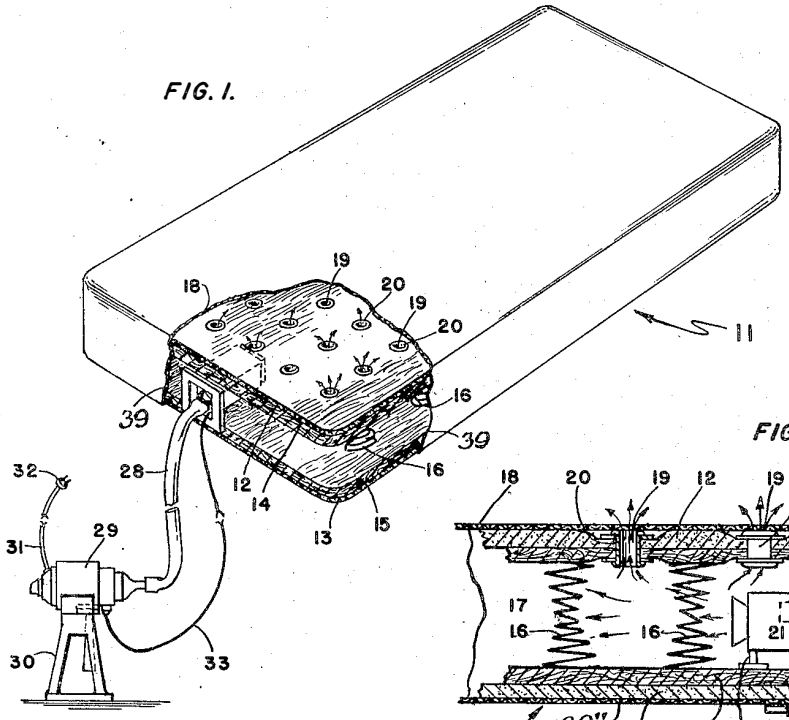

FIG. 2.

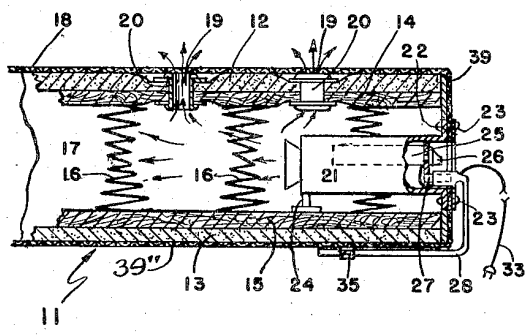

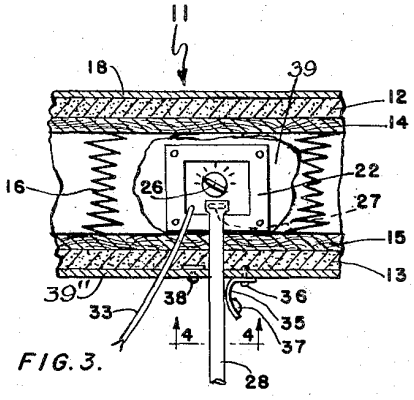

FIG. 3.

FIG. 6.

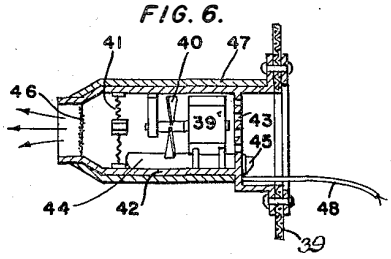

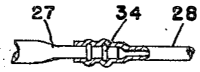

FIG. 5.

FIG. 4.

INVENTOR.

LOUIS J. GOLDSMITH,

BY Irving Seidman

ATTORNEY

Patented Jan. 3, 1950 2,493,067

UNITED STATES PATENT OFFICE

2,493,067

MATTRESS

Louis J. Goldsmith, New York, N. Y.

Application September 8, 1945, Serial No. 615,118

1 Claim. (Cl. 219—39)

1

This invention relates to improvements in mattresses and has particular reference to the type known as "inner spring mattresses."

One object of this invention resides in the provision of a mattress of the said type wherein means are included for blowing air of varying temperatures into the inner compartment of the mattress, and permitting such air to circulate through the said inner compartment, and to heat or cool the mattress to a temperature above or below the normal outside or surrounding temperature.

A further object of this invention is to provide a mattress of the type described wherein outlets are formed in the upper layers or surface of said mattress through which outlets the air within the said inner compartment is permitted to flow and raise or lower the temperature of the upper outer covering or casing of said mattress.

Another object of this invention is the provision therein of a heating and distributing chamber attached within the said inner compartment and having means connected thereto for regulating, to any desired temperature, the air as it flows through the said distributing chamber.

Another object of this invention is the inclusion therein of a blower for driving the air into said distributing chamber and having means within the said distributing chamber to heat the said air current as it passes through same.

A further object of this invention is the inclusion in same of a flat, flexible tube for connecting an air blower with the said air distributing chamber.

A further object of this invention is the inclusion in same of a non-porous encircling band or wall arranged around the edges of said mattress to prevent any of the air within the said inner compartment from escaping through the sides or edge walls of the mattress.

Another object of this invention is the inclusion therein of a housing arranged within and at one end of said mattress and carrying a blower and temperature changing means therein.

A further object of this invention is the inclusion of a thermostatic means for setting and maintaining the temperature of the air within the mattress at any desired degree.

A still further object of this invention is the provision of an organization in which the constituent elements are so arranged structurally and functionally as to assure improved results with materials and members which may be manufactured at reasonable cost, may be easily assembled and which will be efficient in operation with minimum wear to the parts.

The invention possesses other objects and features of advantage, some of which, with the foregoing will be set forth in the following description and in the claim wherein parts will be identified by specific means for convenience, but they are intended to be as generic in their application to similar parts as the art will permit. In the accompanying drawings there has been illustrated the best embodiment of the invention known to me, but such embodiment is to be regarded as typical only of many possible embodiments, and the invention is not to be limited thereto.

2

The novel features considered characteristic of my invention are set forth with particularity in the appended claim. The invention itself, however, both as to its organization and its method of operation, together with additional objects and advantages thereof, will best be understood from the following description of a specific embodiment when read in connection with the accompanying drawings, in which:

Fig. 1 is a perspective view, partly broken away, of a mattress and shows an air blowing mechanism attached thereto.

Fig. 2 is a sectional detail view.

Fig. 3 is a partial end elevation with a portion of the casing removed.

Fig. 4 is a sectional view of the air tube and is taken on line 4—4 of Fig. 3.

Fig. 5 is a detail, partly in section, and shows the means employed for attaching the air tube to its connecting nozzle, and

Fig. 6 is a sectional view showing a modified form of air distributing chamber which forms a part of this invention.

Referring in detail to the parts, numeral 11 designates an inner spring mattress having an upper and lower pad 12 and 13, respectively, of cotton or other suitable material, in close contact with which are the sisal pads 14 and 15 respectively.

Attached to and between the said sisal pads are spiral springs 16 which act as spacers between said sisal pads to form an air compartment 17. The top panel 18 of the outer casing of the mattress is made of porous glass fibrous material. The bottom panel 39'' and the side and end walls 39 of the casing are made of any suitable, non-porous, airtight material.

The upper cotton pad 12 and sisal pad 14 are perforated at intervals to provide the ports 19. Eyelets 20 may be provided in said ports to clamp the said cotton and sisal pads together.

A distributing chamber 21 formed with a flanged end 22 is arranged at one end of the mattress, extends into said air compartment 17, and is attached to an end wall of the mattress by rivets 23 or by other suitable means. A leg or block 24 may be provided as an inner supporting means. An adjustable thermostat 25, having a manipulating knob 26, is set within the said chamber. An air inlet nozzle 27 provides a means for attaching a tube 28 which is in turn attached to an elec-

trically operated blower unit **29**. The said blower unit may be a regulation portable hair drying machine comprising an electrically operated motor, blower and heating unit and a nozzle outlet to which the said flexible air tube may be connected. (See Fig. 1.) The said blower unit **29** may be mounted upon a stand **30** and electric current may be conveyed to the motor by means of a conductor **31** having the regulation plug connector **32**. A second conductor **33** connects the said thermostat **25** with a heating unit in said blower unit **29** and with the source of electric current.

The nozzle outlet and inlet **27** may be formed with ridges **34** which act as a gripping means to hold the end of the flat air tube **28** thereon.

To the underside of the mattress there is provided a strap **35** secured to the mattress by a rivet **36** or by other approved means. This strap is adapted to engage around the said flat air tube when same is not in use and hold it against the underside of mattress (see Fig. 2).

The said strap **35** being held in closed position by means of a snap hook **37—38**.

A wall **39**, of any suitable non-porous material, encircles the mattress and acts to prevent the air within the aforesaid air compartment **17** from escaping.

In operation, the portable hair dryer or blower unit **29** is connected to an electrical source, the flat air tube **33** connected to the blower as shown, the knob **26** set for the degree of heat desired, the free end of the conductor attached to the blower unit and the motor current turned on.

Air will be blown and heated by the unit **29**, forced through flat tube **33** and into the distributing chamber **21**.

The thermostat **25** having been set to the desired degree of heat, the air flowing through the distributing chamber will be maintained at that temperature and distributed into and through the said air compartment **17** and out through the outlet ports **19** and through the pores of the fibrous glass material **18**.

For cooling, the thermostat unit is turned to zero and unheated air is blown through the air compartment.

In the modified form shown in Fig. 6, a motor **39'**, fan **40** and heating element **41** is mounted in a distribution casing **42** which is mounted or attached to the mattress as hereinbefore described.

The said casing **42** is formed with a perforated back or screen **43** and has a thermostat **44** set in a lower corner. A knob or operating handle **45** being provided for manipulation. A fine wire mesh screen **46** may be provided at the outlet end of the casing. With this form set within the mattress, no outside unit is necessary. An asbestos jacket **47** may be provided as shown. An electric conductor **48** is provided to convey electrical energy to the motor, heating unit and thermostat.

I claim:

A mattress comprising a casing of non-porous material open at its top, top and bottom pads of non-porous material arranged in said casing and coacting therewith to provide an air compartment, a porous covering for the top pad, said top pad having a series of air outlet openings arranged therein for affording communication between the air compartment and the porous covering, an an electric air heating and propelling means arranged in the air compartment.

LOUIS J. GOLDSMITH.

REFERENCES CITED

The following references are of record in the file of this patent:

UNITED STATES PATENTS

Number	Name	Date
96,989	Somes	Nov. 16, 1869
829,318	Carlson	Aug. 21, 1906
1,817,277	Uhlig	Aug. 4, 1931
1,936,960	Bowman	Nov. 28, 1933
1,989,582	Becker	Jan. 29, 1935
2,259,712	Sweetland	Oct. 21, 1941
2,400,790	Tolen	May 21, 1941

FOREIGN PATENTS

Number	Country	Date
249,760	Great Britain	Apr. 1, 1926