UNITED STATES PATENT AND TRADEMARK OFFICE

BEFORE THE PATENT TRIAL AND APPEAL BOARD

BESTWAY USA, INC.
Petitioner,

v.

INTEX MARKETING LTD.
Patent Owner.

Case IPR2020-01405
U.S. Patent No. 9,901,186

DECLARATION OF JOHN P. ABRAHAM, PH.D.
IN SUPPORT OF PETITION FOR *INTER PARTES* REVIEW

TABLE OF CONTENTS

I. INTRODUCTION 1

II. QUALIFICATIONS 2

III. SCOPE OF ASSIGNMENT AND MATERIALS REVIEWED 4

IV. LEGAL STANDARDS AND UNDERSTANDINGS APPLIED 6

V. LEVEL OF ORDINARY SKILL IN THE ART 9

VI. CLAIM CONSTRUCTION 10

VII. OVERVIEW OF THE ’186 PATENT 10

VIII. GROUND 1: Obviousness of Claims 1, 6-8, 10 Over Hanlie and Fireman 11

A. Overview of Hanlie 12

B. Overview of Fireman 12

C. Combination of Hanlie and Fireman 12

D. Independent Claim 1 17

1. Element 1 preamble: “An inflatable product comprising:” 17

2. Element 1a: “a first sheet;” 17

3. Element 1b: “a second sheet disposed opposite the first sheet, the first and second sheets spaced apart when the product is inflated to define a gap;” 18

4. Element 1c: “a tensioning structure spanning the gap between the first sheet and the second sheet” 19

5. Element 1d: “the tensioning structure comprising: a plurality of strands uniformly spaced apart and arranged substantially parallel to one another” 20

6. *Element 1e: "a first weld sheet having the plurality of strands uniformly affixed to a surface of the first weld sheet; and"* 26

7. *Element 1f: "a second weld sheet disposed opposite the first weld sheet, the plurality of strands captured between the first and second weld sheets when the first and second weld sheets are welded to one another."* 29

E. Dependent Claim 6 32

F. Dependent Claim 7 34

G. Dependent Claim 8 35

H. Independent Claim 10 36

1. *Element 10 preamble: "An inflatable product comprising:"* 36

2. *Element 10a: "a first sheet;"* 36

3. *Element 10b: "a second sheet disposed opposite the first sheet, the first and second sheets spaced apart when the product is inflated to define a gap;"* 37

4. *Element 10c: "a tensioning structure spanning the gap between the first sheet and the second sheet"* 37

5. *Element 10d: "the tensioning structure comprising a plurality of twisted filaments uniformly spaced apart and arranged substantially parallel to one another; and;"* 38

6. *Element 10e: "a first weld sheet having the plurality of strands uniformly affixed to a surface of the first weld sheet; and;"* 38

7. *Element 10f: "a second weld sheet disposed opposite the first weld sheet, the plurality of twisted filaments captured between the first and second weld sheets when the first and second weld sheets are welded to one another."* 39

IX. GROUND 2: Obviousness of Claims 2, 4-5 under 35 U.S.C. § 103 over Hanlie in view of Fireman and Liu 39

A. Overview of Liu 39

B. Combination of Liu with Hanlie and Fireman 42

C. Dependent Claim 2 45

1. Element 2a: "wherein the first and second weld sheets define a width corresponding to an overall width of the plurality of strands;" 45

2. Element 2b: "and the tensioning structure further comprises a plurality of weld strips affixed to a first side of the weld sheet." 49

D. Dependent Claim 4 54

E. Dependent Claim 5 56

X. GROUND 3: Obviousness of Claims 2-5 under 35 U.S.C. § 103 over Hanlie in view of Fireman, LIU, and SONG 59

A. Overview of Song 59

B. Combination of Song with Hanlie, Fireman, Liu, and Song 61

C. Dependent Claim 2 65

1. Element 2a: "wherein the first and second weld sheets define a width corresponding to an overall width of the plurality of strands;" 66

2. Element 2b: "and the tensioning structure further comprises a plurality of weld strips affixed to a first side of the weld sheet." 67

D. Dependent Claim 3 70

E. Dependent Claim 4 72

F. Dependent Claim 5 72

XI. GROUND 4: Obviousness of Claims 1, 6-7, 9-10 under 35 U.S.C. § 103 over Peterson in view of Fireman and Hanlie 73

A. Overview of Peterson 73

B. Combination of Peterson, Hanlie, and Fireman 74

C. Independent Claim 1 78

1. Element 1 preamble: "An inflatable product comprising:" 78

2. Element 1a: "a first sheet;" 78

3. Element 1b: "a second sheet disposed opposite the first sheet, the first and second sheets spaced apart when the product is inflated to define a gap;" 79

4. Element 1c: "a tensioning structure spanning the gap between the first sheet and the second sheet" 80

5. Element 1d: "the tensioning structure comprising: a plurality of strands uniformly spaced apart and arranged substantially parallel to one another" 82

6. Element 1e: "a first weld sheet having the plurality of strands uniformly affixed to a surface of the first weld sheet; and" 84

7. Element 1f: "a second weld sheet disposed opposite the first weld sheet, the plurality of strands captured between the first and second weld sheets when the first and second weld sheets are welded to one another." 85

D. Dependent Claim 6 87

E. Dependent Claim 7 88

F. Dependent Claim 9 89

G. Independent Claim 10 89

1. Element 10 preamble: "An inflatable product comprising:" 89

2. *Element 10a: "a first sheet;"* 90

3. *Element 10b: "a second sheet disposed opposite the first sheet, the first and second sheets spaced apart when the product is inflated to define a gap;"* 90

4. *Element 10c: "a tensioning structure spanning the gap between the first sheet and the second sheet"* 90

5. *Element 10d: "the tensioning structure comprising a plurality of twisted filaments uniformly spaced apart and arranged substantially parallel to one another; and;"* 91

6. *Element 10e: "a first weld sheet having the plurality of strands uniformly affixed to a surface of the first weld sheet; and;"* 92

7. *Element 10f: "a second weld sheet disposed opposite the first weld sheet, the plurality of twisted filaments captured between the first and second weld sheets when the first and second weld sheets are welded to one another."* 93

I, John P. Abraham, hereby declare:

I. INTRODUCTION

1. I am over the age of 18 and am competent to submit this declaration. The statements and opinions herein are based on my personal knowledge and upon my background, education, research, training, and experience relating to the subject matter discussed.

2. I have been retained by Dickinson Wright PLLC on behalf Petitioner Bestway USA, Inc. ("Bestway") in this matter to offer technical opinions relating to U.S. Patent No. 9,901,186 ("the '186 Patent") and to submit this declaration in connection with the *Inter Partes* Review of Claims 1-10 of the '186 Patent. If called upon to do so, I am prepared to testify as an expert witness in this regard.

3. I am Professor and Program Director of Mechanical Engineering at the University of St. Thomas in St. Paul, Minnesota. I believe my educational and work experience, as summarized below, qualify me as an expert in the field of mechanical engineering, with an emphasis on thermal science. My experience encompasses the analysis of air flow, inflatable products and other devices that rely on pressure-volume changes and fluid mechanics.

4. I have based my opinions upon the materials I have reviewed, my background knowledge, education, research, and training. However, my opinions are necessarily based on the information that is available to me at the time of this

declaration. To the extent that additional information is provided to me later, I reserve the right to supplement this declaration or respond to any evidence or expert testimony submitted on Patent Owner's behalf.

II. QUALIFICATIONS

5. I earned a Bachelor of Science degree in Mechanical Engineering with a minor in Mathematics from the University of Minnesota – Twin Cities in 1997. In 1999, I earned a Master of Science degree from the University of Minnesota – Twin Cities. In 2002, I earned a Ph.D. degree in Mechanical Engineering in the area of Thermal Sciences also from the University of Minnesota – Twin Cities, with my thesis on "A comprehensive experimental, analytical, and numerical investigation of the modes of heat transfer in an electrically heated oven."

6. My MS thesis topic was on the design and construction of polymer sheet HVAC equipment. As part of that thesis, I designed, built, and operated a polymer sheet manufacturing machine.

7. In 2002, I joined the faculty of University of St. Thomas in St. Paul, Minnesota, as an Assistant Professor in the Engineering Department. In 2008, I became an Associate Professor at the University of St. Thomas in the Engineering Department. In 2013, I was promoted to a full professorship at the University of St. Thomas in the Engineering Department, where I currently teach in the area of thermodynamics, heat transfer, and fluid mechanics.

8. I have received several honors and awards during my teaching career, including the University of St. Thomas Engineering Professor of the Year in 2005; the University of St. Thomas John Ireland Award in 2009; and the University of St. Thomas Professor of the Year Award in 2016. Each of these honors are the highest awards for teaching and research at my University.

9. I have produced approximately 350 publications, books, book chapters, conference presentations, and patents related to air flow and pressure, biological heat transfer and fluid flow, biomedical device design, energy, burn injuries, climate change, fundamental heat transfer and fluid mechanics, and manufacturing processes. I have also authored approximately 350 popular press articles and have appeared in more than 50 radio and television appearances that focus on scientific subjects.

10. I also have experience specific to inflatable products. In 2002-2004, I worked on testing and characterizing the BAIRHUGGER inflatable patient warmer. In 2016, I also worked for SMITHS medical on an inflatable patient warmer. I am also listed as a co-inventor of U.S. Patent No. 8,118,255, entitled "Vehicle Energy Absorption," which pertains to an inflatable structure for absorbing the energy of impact from a vehicle. This patent was a result of a consulting project I performed with Lockheed Martin.

11. Furthermore, I have worked in the area of polymer construction – including thermal sealing/laminating of polymers for a wide variety of applications (including medical, food packaging, HVAC systems, etc.)

12. I have worked as a consultant to various companies to improve their polymer-sheet extrusion processing, including thermal laminating.

13. I have designed and tested inflatable fabric ducts that are used to convey ventilation air within residences and commercial buildings. These fabrics are inflated with air from a high-pressure source.

14. I have also served as a consultant in various legal matters, as summarized in my Legal Experience C.V., which is being submitted as Exhibit 1003.

III. SCOPE OF ASSIGNMENT AND MATERIALS REVIEWED

15. I have been retained as an expert on behalf of Bestway to provide information and opinions to the Patent Trial and Appeal Board ("the Board") to assist in its analysis of the patentability of the '186 Patent in the above-captioned *Inter Partes* Review.

16. I am being compensated at the rate of $350 an hour. My compensation does not depend on the substance of my opinions nor on the outcome of this proceeding.

17. In formulating my opinions herein, I have relied upon my training, knowledge, and experience that are relevant to the '186 Patent. Furthermore, I have

specifically considered the following documents listed below in addition to any other documents cited in this declaration. I understand that the references are true and accurate copies of what they appear to be:

Exhibit No.	**Description**	**Identifier**
1001	U.S. Patent No. 9,901,186	’186 Patent
1004	File History of U.S. Patent No. 9,901,186	
1007	Plaintiff Intex Recreation Corp.’s June 26, 2020 Preliminary Infringement Contentions, filed in *Intex Recreation Corp. v. Bestway USA, Inc. et al*, No. 2:19-cv-08596-TJH-AS (C.D. Cal.), filed October 4, 2019	
1011	China Patent CN 2676755Y	Hanlie
1012	U.S. Pub. Patent Appl. No. 2004/0040082	Fireman
1013	U.S. Pub. Patent Appl. No. 2003/0188388	Boso
1015	U.S. Pub. Patent Appl. No. 2007/0277324	Liu
1018	U.S. Pub. Patent Appl. No. 2012/0031265	Song
1019	Final Written Decision in *Bestway (USA), Inc. v. Intex Marketing Ltd.*, PGR2017-00003, Paper No 54 at 23 (PTAB Nov. 7, 2018).	
1027	Excerpts from Webster’s Collegiate Dictionary, 10th Ed. (1997)	
1028	U.S. Patent No. 5,924,144	Peterson

IV. LEGAL STANDARDS AND UNDERSTANDINGS APPLIED

18. In connection with the opinions that I am offering herein, I am relying upon the legal standards and understandings that Petitioner's attorneys have provided and/or explained to me, which I summarize below.

19. I understand that in an *Inter Partes* Review proceeding, the Petitioner has the burden to prove that the challenged claims are unpatentable by a preponderance of the evidence. I understand that a "preponderance of the evidence" means that a fact is more likely than not to be true.

20. I understand that the first step in analyzing the patentability of a claim over the prior art is to determine the claim's meaning and scope from the perspective of a person having ordinary skill in the art ("PHOSITA"), *i.e.* what I understand is called claim construction. Next, I understand that the claim as construed is compared to the prior art, as described in more detail below.

21. I understand that each claim must be analyzed from the perspective of a PHOSITA at the time of invention. Petitioner's counsel has asked me to consider the state of the art from the perspective of a PHOSITA during the time period shortly before June 12, 2012, which is the earliest priority date listed on the '186 Patent.

22. I understand that several factors should be considered in determining the ordinary level of skill in the art including (1) the types of problems encountered in the art; (2) the prior art solutions to those problems; (3) the rapidity with which

innovations are made; (4) the sophistication of the technology; and (5) the educational level of active workers in the field of the patent.

23. I have been informed by Petitioner's counsel that in this proceeding, the Board interprets the claims of a patent in an *Inter Partes* review under the same standards used in a United States District Court. I understand that this standard requires interpreting the claims through the lens of PHOSITA in view of the entire patent and the prosecution history. I understand that, unless an express claim construction is adopted by the Board for any term, that the terms of the claims should be given their ordinary and customary meaning to a PHOSITA at the time of the invention, in the light of the specification and prosecution history. Accordingly, in formulating my opinions, I have reviewed the claims of the '186 Patent as I perceive a PHOSITA would have understood them at the time of the earliest priority date (June 12, 2012) of the '186 Patent, after reading the entire '186 Patent specification and the prosecution history.

24. I understand that, for a patent to be "anticipated" by the prior art, every limitation of the claim must be found, expressly, implicitly or inherently, to be disclosed and arranged as required by the claim, in a single prior art reference which describes the claimed invention in sufficient detail to enable a person of ordinary skill in the art to carry out the claimed invention. I understand that if one limitation

of a claim is missing from that prior art, then the claim is not anticipated by the prior art.

25. I understand that a limitation of a claim may be expressly disclosed in the prior art even if the prior art does not use identical terminology. Rather, I understand that the focus is whether the substance of the limitation is disclosed. I understand that a limitation that is not expressly disclosed may be considered to be implicitly disclosed based on the inferences that a PHOSITA would be expected to draw from the express disclosures based on the PHOSITA's knowledge and experience. Moreover, I understand that where an item is not expressly or implicitly disclosed in an item of prior art, the prior art may be considered to disclose that limitation inherently if the limitation would be necessarily present in the prior art, such as when a characteristic necessarily flows from the teachings of the applied prior art.

26. I understand that even if a claimed invention is not anticipated, the claimed invention is still unpatentable as obvious if the differences between the claimed invention and the prior art are such that the claimed invention as a whole would have been obvious before the effective filing date of the claimed invention to a PHOSITA.

27. I understand that there must have existed an apparent reason, as of the effective filing date, for a PHOSITA to have combined the prior art references in the

manner claimed. I understand that reasons that can support conclusion of obviousness include:

- Combining prior art elements according to known methods to yield predictable results;
- Simple substitution of one known element for another to obtain predictable results;
- Use of known technique to improve similar devices (methods, or products) in the same way;
- Applying a known technique to a known device (method, or product) ready for improvement to yield predictable results;
- "Obvious to try" – choosing from a finite number of identified, predictable solutions, with a reasonable expectation of success;
- Known work in one field of endeavor may prompt variations of it for use in either the same field or a different one based on design incentives or other market forces if the variations are predictable to one of ordinary skill in the art;
- Some teaching, suggestion, or motivation in the prior art that would have led one of ordinary skill to modify the prior art reference or to combine prior art reference teachings to arrive at the claimed invention.

V. LEVEL OF ORDINARY SKILL IN THE ART

28. Based on my experience, and applying my above-explained understanding of the relevant legal principles, it is my opinion that a PHOSITA of the '186 Patent, at the time of its earliest filing date of June 12, 2012, would have at least a bachelor's degree in mechanical engineering, or an equivalent field, and two to four years of practical experience in inflatable product design, manufacturing, and related materials.

VI. CLAIM CONSTRUCTION

29. Based on my experience, and applying my above-explained understanding of the relevant legal principles, it is my opinion that no express construction of any claim term of the '186 Patent is needed to resolve any of the issues of patentability I opine about here. Except as otherwise noted below, I have applied the plain and ordinary meaning of the terms of the patent to a PHOSITA as of the earliest filing date (June 12, 2012) in light of the specification and the prosecution history.

30. I understand that claim construction is ultimately a question of law, and that the Board may choose to provide a construction of certain terms should any dispute arise between the parties over how a term should be construed. I reserve the right to review and potentially modify any of my opinions discussed below in view of any such claim construction which is adopted by the Board or any other tribunal.

VII. OVERVIEW OF THE '186 PATENT

31. The '186 Patent relates to inflatable products with internal tensioning structures connecting two adjacent inflatable surfaces, *i.e.* an inflatable bed or air mattress. Ex. 1001 ('186 Patent) at Abstract. Known inflatable products required internal tensioning structures to form the intended shape upon inflation. *Id.*, 1:45-54. In particular, tensioning structures were used to join the top and bottom surfaces of air mattresses together to maintain a rectangular shape. *Id.*, 1:59-66.

32. However, the '186 Patent notes that prior art tensioning structures were "made of PVC sheets" with thicknesses of about 0.36mm, 0.38mm, or 0.7-0.8mm and "contribute[d] to increased weight" and "increase[d] compressed/folded volume of the deflated inflatable structure." *Id.,* 2:14-22. The '186 Patent instead uses "tensioning structure[s]" "formed by connecting a pair of plastic … sheets [sic] via spaced-apart strands" that "provide a high tensile strength between the two opposed plastic" sheets. *Id.,* 2:26-37.

33. The claims recite tensioning structures "formed by connecting a pair of plastic sheets" on opposite sides of the "spaced-apart strands." *Id.,* Abstract; *see also id.*, cls. 1, 10. Such weld sheets "serve[] to provide for proper positioning and protection of the plurality of strands 32, such as to avoid knotting or damage of strands 32 during practical use." *Id.,* 13:63-67.

VIII. GROUND 1: OBVIOUSNESS OF CLAIMS 1, 6-8, 10 OVER HANLIE AND FIREMAN

34. In my opinion, as set forth in more detail below, a PHOSITA would have found Claims 1, 6-8, 10 of the '186 Patent obvious in light of the disclosures from Hanlie (Ex. 1011) and Fireman (Ex. 1012). In particular, Hanlie describes an inflatable mattress with tensioning structures comprised of a PVC-mesh-PVC sandwich.

A. Overview of Hanlie

35. Hanlie is directed to an "enhanced inflatable mattress." Ex. 1011, [54]. Hanlie's mattress contains "straps [which] are joined with the top and bottom side" of the mattress. *Id.*, 11, Abstract. The "straps' two outer layers are made of PVC film, while the inner layer is made of chemical fiber, nylon, or cotton mesh in between." *Id.*, 3. In one embodiment, the mattress has "eighteen evenly spaced horizontal rectangular straps 1, four vertical rectangular straps 7, top side 2, bottom side 3, first covered side 4, second covered side 6 and air valve 5." *Id.*, 3.

B. Overview of Fireman

36. Fireman is directed to a "self-rising swimming pool." Ex. 1012, Abstract. The pool's flexible side walls have a "three-layer construction" "includ[ing] a layer of mesh 42 interposed between two layers 40 of a translucent flexible polymer, such as, for example, polyvinyl chloride (PVC)." *Id.* ¶19. "The mesh layer 42 enhances the tensile strength of the flexible wall 12, increasing the durability of the structure." *Id.* The mesh has a square grid layout and "is constructed of fine polyester fibers bundled into threads approximately 1 mm in thickness, woven into a mesh of a density approximately 36 squares per square inch." *Id.*; Fig. 5A.

C. Combination of Hanlie and Fireman

37. As I explain above, Hanlie teaches an inflatable mattress with straps which act as tensioning structures to maintain the integrity of the mattress. Ex. 1011,

3. Hanlie discloses that those straps are made of a PVC-mesh-PVC sandwich. *Id.* at 3 ("straps' two outer layers are made of PVC film, while the inner layer is made of chemical fiber, nylon, or cotton mesh in between."). A PHOSITA would understand that Hanlie teaches both a mesh as well as a thermally sealed PVC-mesh-PVC sandwich. However, Hanlie does not disclose the exact structure of its mesh, *i.e.*, the particular pattern and relative orientation of the strands within the mesh. In my opinion, this would motivate a PHOSITA to look to other references for particular mesh structures.

38. Square-grid meshes were well-known, conventional mesh structures, and would immediately come to mind to a PHOSITA when reading Hanlie as a potential structure for implementing Hanlie's mesh. Indeed, square grid meshes have been used in structures such as fishing nets going back to ancient times because they are simple, common configurations for mesh that provide durability and strength. In my opinion, a PHOSITA trying to implement Hanlie's invention would naturally look to references describing the use of a square grid mesh in a PVC-mesh-PVC laminated tensile structure for an inflatable product. Fireman is exactly such a reference: it has a laminated PVC-mesh-PVC tension-resisting component as part of an inflatable structure (an inflatable swimming pool). Ex. 1012, ¶19. Fireman's mesh layer addresses the same problem as the mesh layer of Hanlie's straps: it is used to reinforce the tension-resisting structure, increasing its durability and its

ability to resist tension, thereby making a durable inflatable structure that can endure a variety of forces while maintaining its inflated shape. *Id.*

39. Fireman is pertinent to implementing Hanlie's mesh because both Hanlie's strap and Fireman's "three-layer construction" are directed to the same purpose: resisting tension in an inflatable structure. Although Fireman's three-layer structure is in an exterior wall of the inflatable structure, rather than an internal tensioning structure like Hanlie, a PHOSITA would recognize them as solving the same problem: resisting tension. Fireman expressly explains that the "mesh layer 42 enhances the tensile strength of the flexible wall 12, increasing the durability of the structure and allowing larger swimming pools to be constructed, compared to flexible walls made without a reinforcing mesh layer." Ex. 1012, ¶19. Although Fireman is directed to an inflatable pool, whereas Hanlie is directed to an inflatable mattress, a PHOSITA would consider them as both being in the same field of endeavor: durable consumer inflatable structures. Thus, in my opinion, a PHOSITA would find Fireman's square mesh directly applicable as a structure for implementing the mesh layer of Hanlie's strap. In my opinion, a PHOSITA would find Fireman useful in implementing Hanlie because Fireman provides additional details useful to a PHOSITA regarding the specific size, shape (i.e. square), and composition of such a mesh, as well as how to attach PVC layers to the mesh. Ex. 1012, ¶19. Thus, in my opinion, using Fireman's conventional square grid mesh to

implement the mesh layer of Hanlie's straps would have been a simple substitution of one known element (Fireman's square grid mesh) for another (Hanlie's mesh) and would have yielded predictable results (a durable inflatable mattress as described by Hanlie).

40. As noted earlier, Hanlie does not disclose the specific manufacturing steps for making PVC-mesh-PVC straps in detail. In particular, Hanlie describes "the straps' two outer layers of the mesh covered by PVC fabric is fused or sewed to the inner layer." Ex. 1011, 13. (A PHOSITA would understand the term "fuse" in this context as synonymous with plastic welding). However, Hanlie does not disclose the specific steps for how to fuse (i.e. weld) Hanlie's PVC layers to the mesh to create Hanlie's straps. As discussed above, thermal welding of plastics was a well-known technique used in connection with assembly of inflatable structures prior to the '186 Patent.

41. In my opinion, a PHOSITA trying to implement Hanlie's invention would naturally look to references describing the manufacturing steps for making a PVC-mesh-PVC laminated tension-resisting structure for an inflatable product. Fireman is exactly such a reference: it discloses a hot lamination process for making a PVC-mesh-PVC tension-resisting structure for an inflatable product (an inflatable swimming pool). Ex. 1012, ¶¶19, 21. In particular, Fireman discloses that a "hot lamination" process which "employs an arrangement of rolls containing translucent

PVC stock and mesh stock" and where "rolls containing the PVC stock may be heated to soften the PVC" and then "stock is then fed off the rolls, into rollers or other compression means, in such a manner that the mesh layer is interposed between the two PVC layers." *Id.* ¶ 21. A PHOSITA would understand from Fireman that the three-layer material may then be cut to shape and size as needed. Ex. 1012, Fig. 2, 3 (showing cut flexible wall material 12 in portions cut to size).

42. Fireman's hot lamination addresses the same problem as Hanlie's "fusing"—it is used to manufacture a durable, reinforced tension-resisting structure for an inflatable product—but Fireman provides additional details regarding the exact steps for making such a structure. *Id.* In my opinion, a PHOSITA would find Fireman's hot lamination process useful in implementing Hanlie's invention because Fireman provides additional details useful to a PHOSITA regarding the specific manufacturing steps for how to attach PVC layers to the mesh. Ex. 1012, ¶19. Thus, in my opinion, using Fireman's hot lamination process to manufacture the PVC-mesh-PVC structure of Hanlie's straps would have been simple substitution of one known element (Fireman's hot lamination process) for another (Hanlie's fusing) and would have yielded predictable results (a durable laminated strap as described by Hanlie).

D. Independent Claim 1

43. In my opinion, Claim 1 of the '186 Patent would have been obvious over Hanlie in view of Fireman for the following reasons.

1. Element 1 preamble: "An inflatable product comprising:"

44. Hanlie is expressly directed to an "inflatable mattress," which is a type of inflatable product. Ex. 1011, 11, 13. This is illustrated in Hanlie's Fig. 3, which depicts a cut-away of an inflatable mattress (also known as an air mattress or air bed) with the standard rectangular prism shape. *Id.*, Fig. 3. Moreover, Hanlie confirms that it has a top, bottom and sides which form a "closed air chamber." *Id.*, 15. Also, Hanlie discloses an "air valve 5" which further confirms that the mattress is inflatable. *Id.*, 15. In particular, a PHOSITA would understand that the purpose of a valve in an inflatable mattress is to allow the end-user to inflate and deflate the mattress. Thus, in my opinion, Hanlie discloses this limitation.

2. Element 1a: "a first sheet;"

45. Hanlie discloses that its inflatable mattress has a "top side 2" (i.e. a first sheet), and a "bottom side 3." Ex. 1011 at Abstract, [54]. In my opinon, the top and bottom sides of Hanlie's mattress are "sheets" within the meaning of the '186 Patent. In particular, the '186 Patent discloses its sheets are planar surfaces made of PVC and span the top and bottom of the mattress. Ex. 1001, 9:2-18; Figs. 3-4 at 10, 2. Similarly, Hanlie's "top side" is made of PVC. Ex. 1011, 15 ("Top side 2, bottom

side 3, first covered side 4 and second covered side 6 are all made of PVC 21."). Also, Hanlie's figures depict its "top side 2" and "bottom side 3" as planar surfaces that comprise the respective top and bottom of the mattress. Ex. 1011, Figs. 3, 6, 8. Thus, in my opinion, Hanlie discloses this limitation.

> *3. Element 1b: "a second sheet disposed opposite the first sheet, the first and second sheets spaced apart when the product is inflated to define a gap;"*

46. For the same reason that Hanlie discloses a "first sheet," it also discloses a "second sheet." In particular, Hanlie discloses that its inflatable mattress has a "top side 2" and a "bottom side 3" (i.e. a second sheet). Ex. 1011 at Abstract, [54]. As noted above, the top and bottom sides of Hanlie's mattress are "sheets" within the meaning of the '186 Patent because—like the '186 Patent—Hanlie dislcoses sheets made of PVC which are planar surfaces that comprise the top and bottom of the inflatable mattress. '186 Patent at 9:2-18; Figs. 3-4 at 10, 2; Ex. 1011, 15 ("Top side 2, bottom side 3, first covered side 4 and second covered side 6 are all made of PVC 21."), Figs. 3, 6, 8.

47. Hanlie also discloses that the "second sheet" is "disposed opposite the first sheet, the first and second sheets spaced apart when the product is inflated to define a gap." In particular, Hanlie's Figures 2 and 5 depict the "top side" (i.e. first sheet) and "second side" (i.e. second sheet) are "spaced apart"—with a gap between the "top side 2" and "bottom side 3" which is spanned by strap 1. Ex. 1011, Figs. 2,

5. The fact that Hanlie's sheets are spaced apart is also confirmed by Hanlie's description that "[t]he covered side 4, top side 2 and bottom side 3 form one closed air chamber 8." Ex. 1011, 16. A PHOSITA would understand that forming an air chamber when the product is inflated would require that there be space between the top and bottom sheets, i.e. that they be "spaced apart" to "define a gap" as claimed. Indeed, spacing the top and bottom sheets apart is necessary to serve the purpose of an air bed—otherwise the user would not be supported and instead would be lying on the floor.

48. Thus, in my opinion, Hanlie discloses this limitation.

4. Element 1c: "a tensioning structure spanning the gap between the first sheet and the second sheet"

49. In my opinion, each of Hanlie's straps is a "tensioning structure." As discussed above, and as admitted in the '186 Patent (Ex. 1001, 1:45-2:13), the use of internal tensioning structures in inflatable products was well known in the prior art. Consistent with that widespread use in the field, Hanlie describes the purpose of reinforcing its straps is "so the joining between them is strong, **pull resistant** and durable; the joining between the top and bottom side of the mattress and between the covered sides and straps is strong and durable as well." Ex. 1011, 14 (emphasis added). A PHOSITA wound understand that "pull" in this context is another word

for tension, and therefore this passage of Hanlie is disclosing that its straps resist tension.

50. This is further confirmed by Figures 2 and 5 of Hanlie, which show that its straps are welded to the interior of the top and bottom sides of the mattress without slack when inflated, and thus "spanning the gap between the first sheet [i.e. Hanlie's top side 2] and the second sheet [i.e. Hanlie's bottom side 3]." Ex. 1011, Figs. 2, 5. Moreover, the configuration depicted in Hanlie's Figures 2 and 5 further confirms that Hanlie's straps are under tension, i.e. that they resist the tension from the pressure of the air that is inflating the air chamber between the top and bottom sheets. Indeed, Figures 2 and 5 of Hanlie depict its straps as having the same configuration as Figure 1 of the '186 Patent: rectangular, planar structures perpendicular to the top and bottom of the mattress with a vertical extent spanning the gap between the top and bottom sheets and connected to the interior of the top and bottom sheets. Ex. 1001, Fig. 1, 8:56-58. In addition, a PHOSITA would recognize that, when the user of Hanlie's air mattress lays on the mattress, the downward gravitational force from the user's body will tend to distort the top sheet, thereby compressing some straps, but also putting additional tension on other straps, and thus requiring Hanlie's straps to resist tension and thereby maintain the shape of the mattress.

51. Thus, in my opinion, Hanlie discloses this limitation.

5. Element 1d: "the tensioning structure comprising: a plurality of strands uniformly

spaced apart and arranged substantially parallel to one another"

52. Hanlie discloses its "straps 1" are "made of mesh covered by PVC fabric." Ex. 1011, 13. A PHOSITA wound understand that a "mesh" as disclosed in Hanlie would be made of strands. Indeed, Hanlie states that the "mesh" can be "chemical fiber, nylon or cotton," which is consistent with this understanding. Ex. 1011, 11. However, Hanlie does not expressly disclose the exact structure of its mesh, and, in particular, the configuration of the constituent strands of its mesh.

53. In my opinion, Fireman's mesh, however, expressly discloses "a plurality of strands uniformly spaced apart and arranged substantially parallel to one another." In particular, Fireman teaches an inflatable pool with a "portion of the flexible wall being comprised of a layer of mesh interposed between a first layer of translucent polyvinyl chloride (PVC) and a second layer of translucent PVC." Ex. 1012 ¶ 5. Fireman explains that its mesh may be "constructed of bundled threads woven into mesh form," and "enhance[s] the tensile strength of the flexible wall 12." *Id.* The threads of Fireman's mesh are consistent with the ordinary understanding a PHOSITA would have of the meaning of strand in the field. For example, the Merriam Webster's Collegiate Dictionary, Tenth Edition defines "strand" as "fibers or filaments twisted, plaited or laid parallel to form a unit" and "an element (as a yarn or thread) of a woven or plaited material." Ex. 1027, 1161. Similarly, the '186 Patent describes its "strands" as being "strings," which is also consistent with the

disclosure in Fireman of bundled threads. Ex. 1001, Abstract, 2:31-35. Thus, in my opinion, a PHOSITA would understand Fireman as expressly disclosing that its mesh is composed of strands.

54. Additionally, Fireman discloses using a conventional grid mesh made of "squares." Ex. 2012, Fig. 5a, 5b, ¶ 19. As a basic fact of geometry, all four sides of a square are equal in length, the opposing sides of a square are parallel to each other, and the adjacent sides of a square are perpendicular to each other. Ex. 1027 [Merriam Webster's Collegiate Dictionary 10th ed.,], 1141 (defining "square" as "having four equal sides and four right angles"). Accordingly, in my opinion, a mesh using a conventional square-grid pattern such as Fireman has vertical elements that are "uniformly spaced apart and arranged substantially parallel to one another." This is confirmed by Fireman's Figure 5A, which depicts a conventional square-grid configuration of the mesh, with vertical components of the squares (i.e. strands) arranged parallel to one another and uniformly spaced apart. Ex. 1012, Fig. 5A.

55. As discussed in detail above, in my opinion, a PHOSITA would be motivated to combine Fireman's conventional square grid mesh with Hanlie and thereby create "the tensioning structure comprising: a plurality of strands uniformly spaced apart and arranged substantially parallel to one another." In particular, because Hanlie does not disclose the specific detailed structure of its strap's mesh layer, a PHOSITA would need to choose *some* specific mesh structure in

implementing Hanlie's invention. Accordingly, a PHOSITA would be motivated to look to other prior art to select a particular mesh structure in implementing Hanlie. As I note above, a square grid structure is a long-known, conventional structure for a mesh, and would immediately come to mind to a PHOSITA as a potential mesh configuration when reading Hanlie's description.

56. Thus, in my opinion, a PHOSITA attempting to implement Hanlie would be motivated to confirm that a square-grid mesh pattern was suitable for a PVC-mesh-PVC laminated structure as disclosed by Hanlie. Accordingly, in my opinion, a PHOSITA would naturally look to references describing the use of a square grid mesh in a PVC-mesh-PVC laminated tension-resisting structures for an inflatable product. As I describe above, Fireman is exactly such a reference: Fireman describes a "three-layer construction . . . include[ing] a layer of mesh 42 interposed between two layers . . . [of] polyvinyl chloride (PVC)," with a mesh made of "squares," the purpose of which is to "enhance[] the tensile strength of the flexible wall 12." Ex. 1012, ¶ 19. Fireman would confirm to a PHOSITA that a square grid mesh would predictably provide a suitably strong tension-resisting structure for implementing the mesh in Hanlie's straps. Moreover, a PHOSITA would recognize that Fireman provides useful details regarding the specific size, shape, and composition of such a mesh, as well as how to manufacture a PVC-mesh-PVC structure. Ex. 1012, ¶¶ 19-23, Fig. 5A, 5B. Thus, in my opinion, using Fireman's

conventional square grid mesh structure as the mesh layer for Hanlie's straps would have merely been simple substitution of one known element (Fireman's square grid mesh) for another (Hanlie's mesh) to yield predictable results.

57. Thus, it is my opinion that it would be obvious to a PHOSITA to combine Hanlie and Fireman in the manner recited by this claim limitation. In particular, as I opine above, Hanlie's "straps" are tensioning structures, and Fireman's square grid mesh is comprised of a plurality of strands uniformly spaced apart and arranged substantially parallel to one another. As to the specifics of the combination, the only relevant option a PHOSITA would recognize in the manner of combining would be the specific orientation of Fireman's square grid mesh within Hanlie's strap. Given that Fireman's mesh is a square grid, a PHOSITA would recognize that there would be only two meaningfully different potential options: (1) having members of Fireman's mesh substantially parallel with the direction of tension (i.e. having vertical members of Fireman's mesh substantially parallel to, and running the length of, the vertical extent of Hanlie's strap between the top and bottom of the mattress); or (2) having the members be at a different angle from the direction of tension (i.e. having the members of Fireman's mesh be diagonal to the vertical extent of Hanlie's strap).

58. Given that there are only two meaningful options for orienting Fireman's mesh within Hanlie's strap, it is my opinion that a PHOSITA would find

either obvious to try. However, it is my opinion that a PHOSITA would be specifically motivated to orient Fireman's square grid mesh with members substantially parallel with the direction of tension of Hanlie's strap, such that the vertical members would run the length of the vertical extent of Hanlie's strap between the top and bottom of the mattress (and continuing on through the remainder of the strap). In particular, a PHOSITA would recognize that orienting the vertical members of Fireman's mesh in the direction of tension would best allow the mesh to resist tension and maximize the strength of the mesh. In particular, a diagonally oriented mesh would result in threads being partially unsupported at the horizontal and vertical edges of the mesh – and therefore less effective at resisting tension. By contrast, by orienting Fireman's mesh parallel to the direction of tension of Hanlie's strap, there would be vertical members running the entire length of the strap, anchored at both the top and bottom of the mattress, including near the horizontal edges of the strap. This arrangement would guarantee that the support provided by the tensioning structure is uniform and spread across the width of the mesh. However, I note that, regardless of the orientation of Fireman's square grid mesh within Hanlie's strap, the mesh would still satisfy this claim's requirement for "the tensioning structure comprising: a plurality of strands uniformly spaced apart and arranged substantially parallel to one another." That is, even a diagonally oriented mesh would have a plurality of strands which are parallel and uniformly spaced apart

(either the top left to bottom right or the top right to bottom left strands would satisfy the limitation).

59. Thus, in my opinion, the combination of Hanlie and Fireman renders this limitation obvious.

6. Element 1e: "a first weld sheet having the plurality of strands uniformly affixed to a surface of the first weld sheet; and"

60. In my opinion, each of Hanlie's straps comprises "a first weld sheet having the plurality of strands uniformly affixed to a surface of the first weld sheet." In particular, Hanlie discloses that its straps (i.e. tensioning structures) have two outer layers of PVC film (i.e. a first weld sheet and a second weld sheet) on either side of the mesh: "[t]he straps' two outer layers are made of PVC film, while the inner layer is made of chemical fiber, nylon or cotton mesh in between." Ex. 1011, 13. Hanlie also describes that the PVC is "fused" to the mesh. *Id.*, 12 (cl. 2), 15. A PHOSITA would wound understand the term "fuse" in this context as synonymous with thermoplastic welding. This meaning of "fuse" is well known in the art to be thermal welding. Furthermore, the interpretation of fuse is commonly used in the English language. Ex. 1027 [Merriam Webster Collegiate Dictionary, 10th ed.], 474 (defining "fuse" as "to reduce to a liquid or plastic state by heat"). Additionally, Figures 2 and 5 of Hanlie depict the PVC layers (11) as uniformly affixed to the outer surfaces of the inner layer of mesh (12). In my opinion, the result of using

"fusing," (i.e. thermoplastic welding) to create a PVC-mesh-PVC structure as illustrated in Figures 2 and 5 of Hanlie would result in the mesh being uniformly affixed to the PVC layers as claimed. Indeed, this is consistent with the '186 Patent itself, which describes using thermoplastic welding in the form of hot rollers to affix its strands to its weld sheets. Ex. 1001, 15:21-42. A PHOSITA would understand the PVC film layers of Hanlie's strap to be "weld sheets" because they are planar structures which are fused (i.e. welded) to the mesh layer. Also, like the weld sheets of the '186 Patent (Ex. 1001, 17:47-50), a PHOSITA would recognize that the PVC film layers of Hanlie's strap would similarly contain the mesh layer and prevent the members of the mesh from becoming entangled with each other.

61. In my opinion, Fireman also discloses a first weld sheet having the plurality of strands uniformly affixed to a surface of the first weld sheet. In particular, Fireman discloses that its PVC-mesh-PVC structure may be fabricated via a "hot lamination procedure" whereby "rolls containing the PVC stock may be heated" and "then fed off the rolls, into rollers or other compression means, in such a manner that the mesh layer is interposed between the two PVC layers." Ex. 1012, ¶21. Fireman describes that, next, "[t]he three layers are then compressed together in the rollers or other compression means so that the each PVC layer bonds to the mesh and to the other PVC layer in the interstices of the mesh." *Id.* (emphasis added). That Fireman's roller-based hot lamination process results in uniform

affixation of the layers is confirmed by Figures 5A and 5B of Fireman, which depict that the PVC layers uniformly affixed to the mesh. Ex. 1012, Figs. 5A, 5B. In particular, Figure 5B and the accompanying written description (Ex. 1012, ¶ 21) disclose Fireman's three-layer construction as having a particular uniform thickness, which requires a uniform manufacturing process with uniformly spaced rollers. Thus, a PHOSITA would understand from these disclosures in Fireman that the "rollers" of Fireman's hot lamination process are cylinders which are aligned and opposing. These rollers provide a uniform contact as the PVC-mesh-PVC layers pass through the machine. The rollers would provide substantially uniform compressive pressure on such PVC-mesh-PVC layers as they pass through the rollers, thereby resulting in a three-layer structure with the PVC layers uniformly affixed to the mesh. That Fireman's "hot lamination" procedure provides "uniform[] affix[ation]" is further demonstrated by the fact the '186 Patent uses the same "hot roller" process for attaching the weld sheets to its strands. '186 Patent, 15:29-42, 15:58-16:9, Fig. 7.

62. In my opinion, a PHOSITA would be motivated to use Fireman's roller-based "hot lamination process" to manufacture Hanlie's straps and thereby create "a first weld sheet having the plurality of strands uniformly affixed to a surface of the first weld sheet." In particular, although Hanlie discloses manufacturing its straps

using "fusing," Hanlie does not disclose a detailed step-by-step manufacturing process for carrying out the fusing (i.e. thermoplastic welding).

63. Accordingly, a PHOSITA would be motivated to look to other prior art for describing a step-by-step manufacturing process for hot laminating (a method of thermoplastic welding) the layers of a PVC-mesh-PVC tension-resisting structure. As I describe above, Fireman is exactly such a reference: Fireman describes a "three-layer construction . . . includ[ing] a layer of mesh 42 interposed between two layers . . . polyvinyl chloride (PVC)," which is made by a roller-based "hot lamination" process. Ex. 1012, ¶¶ 19, 21. Fireman would confirm to a PHOSITA that a roller-based hot lamination process would result in a suitably strong tension-resisting structure for Hanlie's straps. Moreover, a PHOSITA would recognize that Fireman provides useful details regarding the specific size of the PVC-mesh-PVC structure, as well as how to manufacture such structure. Ex. 1012, ¶¶ 19-23, Fig. 5A, 5B. Thus, in my opinion, using Fireman's hot lamination procedure to construct Hanlie's straps would apply a known technique [i.e. Fireman's "hot lamination procedure"] to a known product [i.e. Hanlie's PVC-mesh-PVC straps] to yield predictable results.

64. Thus, in my opinion, Hanlie alone discloses this limitation. Also, in my opinion, the combination of Hanlie and Fireman renders this limitation obvious.

7. Element 1f: "a second weld sheet disposed opposite the first weld sheet, the plurality of strands captured between the first and

second weld sheets when the first and second weld sheets are welded to one another."

65. For the same reasons discussed in element 1e, it is my opinion that Hanlie discloses this limitation. In particular, Hanlie discloses that "[t]he straps' two outer layers are made of PVC film [i.e. a first and second weld sheet], while the inner layer is made of chemical fiber, nylon or cotton mesh in between [i.e. a plurality of strands captured between them]." Ex. 1011, 13. As I explain in element 1e, in my opinion, fusing in this context connotes thermoplastic welding, satisfying the "welding" limitation, and demonstrating that both of the PVC layers of Hanlie's strap are "weld sheets." Thus, Hanlie expressly discloses "a second weld sheet disposed opposite the first weld sheet, the plurality of strands captured between the first and second weld sheets."

66. As to the limitation "when the first and second weld sheets are welded to one another," in my opinion, this is necessarily present in Hanlie from Hanlie's disclosure of "fusing" the two plastic layers to either side of the mesh of Hanlie's strap. Ex. 1011, 12 (cl. 2), 13, 15. In particular, the word "mesh," in the context used in Hanlie, necessarily conveys to a PHOSITA a structure with holes. This interpretation is further supported by the English definition of "mesh". Ex. 1027 [Webster's Collegiate Dictionary, 10th ed.], 728-29 (defining "mesh," as "a woven, knit or knotted material of open texture with evenly spaced holes."). As a result, a PHOSITA would recognize that, when "fusing" is used to affix the PVC film layers

to the mesh as described in Hanlie, the PVC layers will be melted, and thus the portions of the PVC layers over the holes of Hanlie's mesh will contact each other. Accordingly, a PHOSITA would recognize that PVC film layers of Hanlie's PVC-mesh-PVC straps are not only welded to the mesh layer, but are also welded to each other in the holes between the mesh, thereby capturing the strands of the mesh. Thus, in my opinion, Hanlie discloses "a second weld sheet disposed opposite the first weld sheet, the plurality of strands captured between the first and second weld sheets when the first and second weld sheets are welded to one another."

67. In addition, it is my opinion that this limitation is also expressly disclosed by Fireman's "hot lamination procedure." As discussed in element 1e, the result of Fireman's hot lamination process is that "[t]he three layers are then compressed together in the rollers or other compression means so that the **each PVC layer bonds** to the mesh and **to the other PVC layer in the interstices of the mesh**." Ex. 1012, ¶ 21 (emphasis added). Thus, Fireman expressly discloses "a second weld sheet disposed opposite the first weld sheet" (i.e. the two outer PVC layers depicted in Fireman's Figures 5A and 5B) and that "the plurality of strands captured between the first and second weld sheets when the first and second weld sheets are welded to one another" (i.e. Fireman's disclosure that "each PVC layer bonds to the mesh and to the other PVC layer in the interstices of the mesh"). Thus,

if Fireman's "hot lamination" process is used to manufacture Hanlie's straps (as I describe above in element 1e), the resulting material would satisfy this limitation.

68. Thus, in my opinion, Hanlie alone discloses this limitation. Also, in my opinion, the combination of Hanlie and Fireman renders this limitation obvious.

E. Dependent Claim 6

69. Claim 6 depends from Claim 1 and further recites "wherein the plurality of strands comprise a plurality of twisted filaments." In my opinion, for the following reasons, the combination of Hanlie and Fireman as described above in Claim 1 renders obvious the limitation added by Claim 6.

70. As discussed in Claim 1, it would be obvious to use Fireman's mesh to implement the mesh layer in Hanlie's PVC-mesh-PVC straps. Additionally, Fireman discloses that its mesh satisfies this limitation. In particular, Fireman teaches that its mesh may be composed of "a monofilament mesh, or constructed of bundled threads woven into mesh form, and may be constructed of polyester, polypropylene, or other polymer, as well as cotton fiber, or other natural or synthetic materials." Ex. 1012 at ¶ 19. Fireman further discloses that "[i]n an exemplary embodiment, the mesh layer is constructed of fine polyester fibers bundled into threads approximately 1 mm in thickness." *Id.*

71. In my opinion, a PHOSITA would recognize that Fireman's use of the word "thread," in that context, means "a group of filaments twisted together, or a

filamentous length formed by spinning and twisting short textile fibers into a continuous strand" Ex. 1027 [Merriam Webster Collegiate Dictionary, 10th ed. (1997)], 1228. Thus, the bundled threads of the vertical components of Fireman's mesh disclose a "plurality of strands comprise a plurality of twisted filaments."

72. This is further confirmed by Fireman's description of individual "fibers" being "bundled into" such threads. A PHOSITA would recognize that twisting together such fibers is the typical mechanism by which such "fine" "fibers" would be "bundled" together and stay to each other as a cohesive whole capable of resisting tension, as disclosed in Fireman. Indeed, making strong strands by twisting filaments into threads, as claimed, was a well-known, long-standing and fundamental technique in the prior art and within the background knowledge of a PHOSITA, as demonstrated by the dictionary definitions of "thread" and "strand" themselves. Ex. 1027 [Merriam Webster Collegiate Dictionary, 10th ed. (1997)], 1161, 1228 (definition of "thread", "strand"). Thus, a PHOSITA, relying on such background knowledge, would be motivated to use strands of twisted filaments as claimed and as disclosed by Fireman in the combination of Hanlie and Fireman.

73. Thus, in my opinion, the combination of Hanlie and Fireman renders this claim obvious.

F. Dependent Claim 7

74. Claim 7 depends from Claim 1 and further recites "wherein the tensioning structure is welded to the first sheet and the second sheet such that the tensioning structure spans the gap between the first sheet and the second sheet." In my opinion, for the following reasons, the combination of Hanlie and Fireman as described above in Claim 1 renders obvious the limitation added by Claim 7.

75. As to the limitation "the tensioning structure spans the gap between the first sheet and the second sheet," this is expressly disclosed in Hanlie, as I discuss above in element 1c. In particular, Hanlie's Figures 2 and 5 depict its "strap" as spanning the gap between the interior surface of "top side 2" and "bottom side 3" of Hanlie's mattress when inflated. Ex. 1011, Figs. 2 and 5.

76. Additionally, Hanlie discloses that "the tensioning structure [i.e. strap] is welded [i.e. fused] to the first sheet [i.e. top side 2] and the second sheet [i.e. bottom side 3]." Figures 2 and 5 of Hanlie show the strap connected to the interior of the top and bottom sides of the mattress. Ex. 1011, Figs. 2, 5. Moreover, Hanlie expressly discloses that its straps are *welded* to the top and bottom of the mattress: "straps are sewed to or fused [i.e. welded] into the top and bottom side of the mattress." Ex. 1011, 14; *see also* Ex. 1011, 12 (cls. 3, 5). As I describe above, a PHOSITA would understand the term "fusing" as used in Hanlie to mean thermoplastic welding, which is a type of welding. Ex. 1027 [Merriam Webster

Collegiate Dictionary, 10th ed.], 474 (defining "fuse" as "to reduce to a liquid or plastic state by heat"). As noted, this is consistent with the '186 Patent's use of the term "weld" to include thermoplastic welding in the form of hot roller lamination, which further demonstrates that Hanlie's use of the term "fused" satisfies the "welded" limitation of this claim. Ex. 1001, 15:21-42. Indeed, as I describe above, thermoplastic welding as claimed, was a well-known, long-standing and fundamental technique in the prior art for joining plastic components and was well within the background knowledge of a PHOSITA. Thus, a PHOSITA would be motivated to rely on such background knowledge, to use "fusing" (i.e. welding) as claimed and as disclosed by Hanlie in the combination of Hanlie and Fireman.

77. Thus, in my opinion, the combination of Hanlie and Fireman renders this claim obvious.

G. Dependent Claim 8

78. Claim 8 depends from Claim 1 and further recites "wherein the inflatable product is an air mattress." In my opinion, for the following reasons, the combination of Hanlie and Fireman as described above in Claim 1 renders obvious the limitation added by Claim 8.

79. In particular, as discussed above in element 1preamble, Hanlie is directed to an "enhanced inflatable mattress." Ex. 1011, Title, Abstract, 12 (cl. 1), 13. The terms "inflatable mattress" and "air mattress" are synonymous. Indeed, Fig.

3 of the '186 Patent and Figures 1, 3, 6 and 8 of Hanlie depict the same essential product: an inflatable product in the approximate shape of a rectangular prism suitable, when inflated, for a human to lay on in a like manner as a conventional mattress. Ex. 1001, Fig. 3; Ex. 1011, Figs. 1, 3, 6, 8. That Hanlie discloses an "air mattress" is further confirmed by its disclosure that "[t]he covered side 4, top side 2 and bottom side 3 form one closed air chamber 8." Ex. 1011, 16.

80. Thus, in my opinion, the combination of Hanlie and Fireman renders this claim obvious.

H. Independent Claim 10

81. In my opinion, Claim 10 of the '186 Patent would have been obvious over Hanlie in view of Fireman for the following reasons.

1. Element 10 preamble: "An inflatable product comprising:"

82. As explained in further detail above in the preamble for element 1, Hanlie is expressly directed to an "inflatable mattress," which is a type of inflatable product. Ex. 1011, 11, 13, Fig. 3 Thus, in my opinion, Hanlie discloses this limitation.

2. Element 10a: "a first sheet;"

83. As explained in further detail above in element 1a, Hanlie discloses that its mattress has a "top side 2" which is a "first sheet." Ex. 1011 at Abstract, Figs. 3, 6, 8. Thus, in my opinion, Hanlie discloses this limitation.

3. Element 10b: "a second sheet disposed opposite the first sheet, the first and second sheets spaced apart when the product is inflated to define a gap;"

84. As explained in further detail above in element 1b, Hanlie satisfies this limitation. In particular, Hanlie discloses that its mattress has a "bottom side 3" which is a "second sheet." Ex. 1011 at Abstract, Figs. 3, 6, 8. Moreover, Hanlie's Figures 2 and 5 depict its "top side 2" and "bottom side 3" as "spaced apart when the product is inflated to define a gap." Ex. 1011, Figs. 2, 5; *see also id.* at 16 (describing that "[t]he covered side 4, top side 2 and bottom side 3 form one closed air chamber 8."). Thus, in my opinion, Hanlie discloses this limitation.

4. Element 10c: "a tensioning structure spanning the gap between the first sheet and the second sheet"

85. As explained in further detail above in element 1c, Hanlie satisfies this limitation. In particular, a PHOSITA would understand that Hanlie's straps are the claimed tensioning structures because they are "pull resistant" and are depicted as connecting the top and bottom of Hanlie's mattress without slack when inflated, in the same manner as the tensioning structures of the '186 Patent. Ex. 1011, 14, Figs. 2, 5; Ex. 1001, Fig. 1, 8:56-58. Hanlie's Figures 2 and 5 also illustrate that the straps span the gap between the top and bottom sheet. Ex. 1011, Figs. 2, 5. Thus, in my opinion, Hanlie clearly discloses this limitation.

5. Element 10d: "the tensioning structure comprising a plurality of twisted filaments uniformly spaced apart and arranged substantially parallel to one another; and;"

86. As explained in further detail above in element 1d and Claim 6, the combination of Hanlie and Fireman renders this limitation obvious. In particular, as discussed above in element 1e, Fireman discloses a mesh with a plurality of strands in a square grid pattern, and thus the vertical members of Fireman's mesh are "uniformly spaced apart" and "substantially parallel to one another." Ex. 1012, Figs. 5A, 5B, ¶ 19. As discussed above in Claim 6, Fireman discloses that its "mesh layer is constructed of fine polyester fibers bundled into threads," which a PHOSITA would understand as disclosing "twisted filaments." Thus, in my opinion, the combination of Hanlie and Fireman renders this limitation obvious.

6. Element 10e: "a first weld sheet having the plurality of strands uniformly affixed to a surface of the first weld sheet; and;"

87. As explained in further detail above in element 1e, Hanlie satisfies this limitation, as does the combination of Hanlie and Fireman. In particular, Hanlie discloses that its "straps" are made by "fusing," which a PHOSITA would understand in context, and in light of Figures 2 and 5 of Hanlie, to result in the mesh of Hanlie's strap being uniformly affixed to each of the PVC film layers. Ex. 1011, 12 (cl. 2), 15. Moreover, as discussed above, the roller-based "hot lamination" Fireman discloses for making its three-layer flexible wall structure also results in

uniformly affixing the strands of its mesh to the weld sheets, in the same manner as the hot roller method disclosed by the '186 Patent. Ex. 1012, ¶21, Figs. 5A, 5B; Ex. 1001, 17:47-50. Thus, in my opinion, Hanlie discloses this limitation, and the combination of Hanlie and Fireman renders this combination obvious.

> *7. Element 10f: "a second weld sheet disposed opposite the first weld sheet, the plurality of twisted filaments captured between the first and second weld sheets when the first and second weld sheets are welded to one another."*

88. As explained in further detail above in element 1f, the combination of Hanlie and Fireman discloses this limitation. As discussed above, Fireman's roller-based "hot lamination" process discloses that "[t]he three layers are then compressed together in the rollers or other compression means so that the **each PVC layer bonds** to the mesh and **to the other PVC layer in the interstices of the mesh**." Ex. 1012, ¶ 21 (emphasis added). Also, as noted in Claim 6 and above in element 10e, Fireman's mesh is composed of twisted filaments. Thus, in my opinion, the combination of Hanlie and Fireman renders this combination obvious.

IX. GROUND 2: OBVIOUSNESS OF CLAIMS 2, 4-5 UNDER 35 U.S.C. § 103 OVER HANLIE IN VIEW OF FIREMAN AND LIU

A. Overview of Liu

89. Liu is directed to the "[b]eam construction of air mattresses." Ex. 1015, ¶1. Liu describes prior art inflatable mattresses as using beams with "]" (i.e. "U") or "Z" shapes. *Id.* ¶ 2. A PHOSITA would understand these as respectively

corresponding to the "U" shape and "Z" shaped configurations of Hanlie's straps, as shown in Hanlie's Figures 2 and 5. Ex. 1011, Figs. 2, 5. Liu explains that prior art beam configurations (as in Hanlie's "U" and "Z" configurations) suffer from the problem that "[a] vertical direction pulling force is created against the top sheet and the bottom sheet after inflation, with more force being exerted at the seam where the beams and the top sheet or the bottom sheet connect." Ex. 1015, ¶2. Liu teaches that "[t]he place where the beams and the top sheet or the bottom sheet connect may easily come apart or be torn apart." *Id.*

90. To address this problem, Liu discloses mattresses with "I," "J, "X" or "Y" shaped beams. *Id.*, ¶4, Figs. 1-3. Liu teaches that beam configurations have "the advantage" of "added connecting area between the beams and the top sheet and the bottom sheet, thus reducing the pulling force exerted at the seam and ensuring the durability of the air mattress." *Id.* ¶2. Notably, the beam configurations depicted in Liu's Figures 1 and 3 include, at the "two ends of beam 4," "extending parts 41 that are connected with a top sheet 1 or a bottom sheet 2, respectively, by adoption of high-frequency welding." *Id.* ¶¶ 11, 13, Figs. 1, 3. Although Liu labels and describes several of the terminal portions of the beam as being "extending parts 41," Liu's figures depict that the beam is actually constituted by multiple parts: (1) a main beam that spans the gap between the top and bottom of the mattress in a roughly U shape, and (2) additional, separate extending parts that are welded onto the opposing

side of the beam as well as to the top or bottom sheets of the mattress. Indeed, the difference between Liu's Figure 3 and Figure 4 is the presence in Figure 3 of an additional separate extending part attached to the lower portion of the beams. *Id.*, Figs. 3, 4. In the below annotated versions of Liu's Figures 1 and 3, those additional separate "extending parts 41" are highlighted in blue, whereas the "]"-shaped beam is highlighted in yellow:

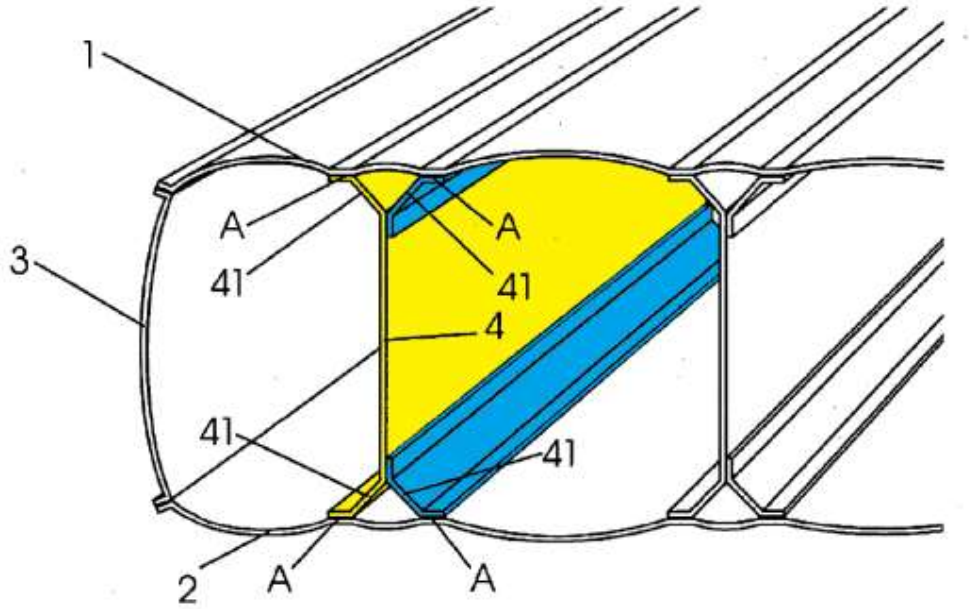

Annotated Version of Liu, Figure 1

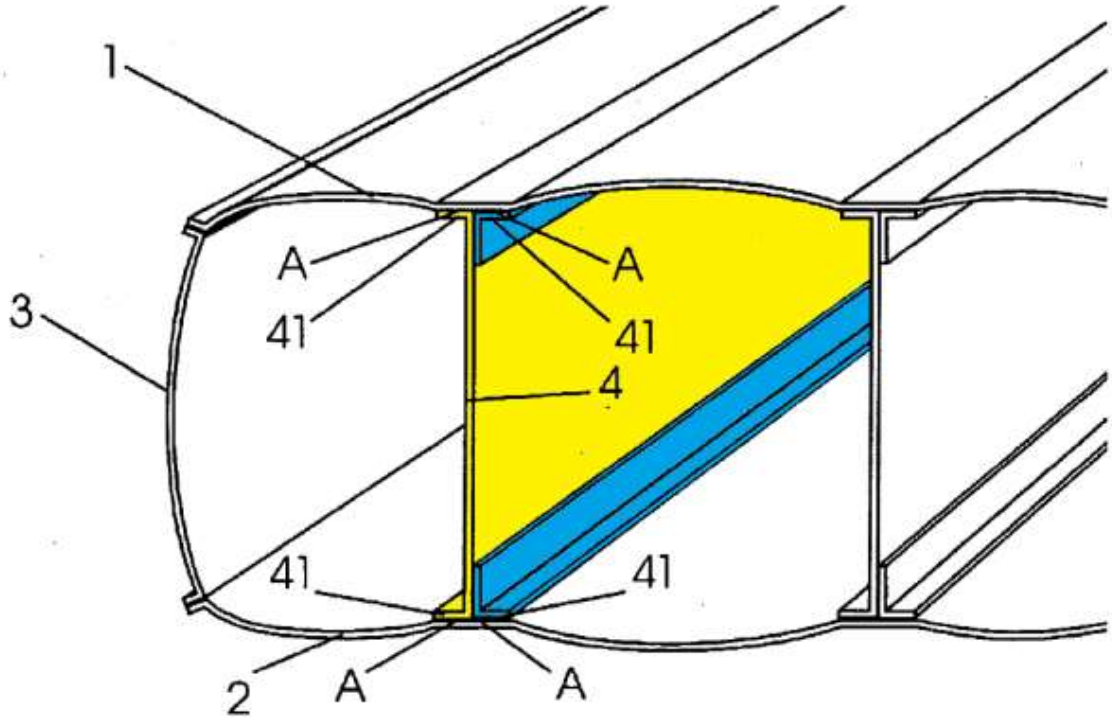

Annotated Version of Liu, Figure 3

B. Combination of Liu with Hanlie and Fireman

91. As noted above, Liu expressly discloses that the "U" and "Z" shaped strap configurations disclosed in Hanlie have a problem in that "[t]he place where the beams and the top sheet or the bottom sheet connect may easily come apart or be torn apart." Ex. 1015, ¶2. In my opinion, a PHOSITA would be motivated by Liu's disclosure of the problems with the conventional method for attaching tensioning structures to the top and bottom sheets with a single terminal weld (e.g. Hanlie's U-shaped configuration) to modify the geometric configuration of the strap of the Hanlie-Fireman combination described above in Claim 1. (This combination would maintain the mesh of Hanlie/Fireman as described above in Ground 1).

92. Just as Liu's Figure 3 uses separate additional "extending parts 41" to modify an otherwise "U" shaped beam, a PHOSITA would be motivated by Liu to apply Liu's separate L-shaped "extending parts 41" (as shown in blue in the above-annotated version of Liu's Fig. 3) to further reinforce the attachment between Hanlie's strap and the top and bottom of the mattress. A modified version of Hanlie's Figure 5 is shown below, with two separate "extending parts 41" from Liu's Figure 3 added and highlighted in blue, and with the U-shaped strap of Hanlie highlighted in yellow:

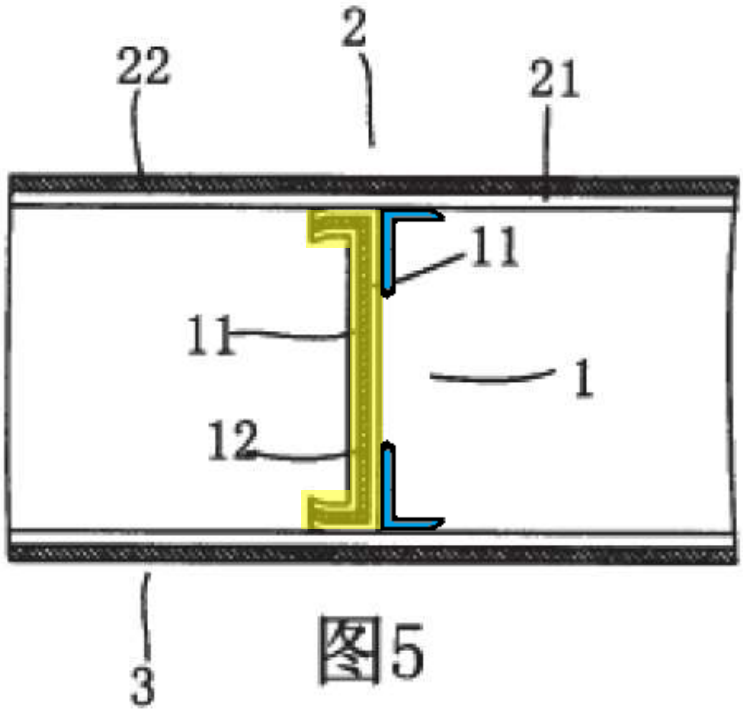

Modified and Annotated Version of Figure 5 of Hanlie with portions of Liu Figure 3 added

In my opinion, a PHOSITA would be motivated to further modify the Hanlie-Fireman combination with Liu's separate extending parts as shown in this modified and annotated figure.

93. In my opinion, using Liu's "extending parts" to further reinforce the connection between Hanlie's "strap" and the interior surfaces of the top and bottom of Hanlie's mattress would address the problem that Liu identifies with Hanlie's "U" and "Z" shaped configurations: "more force being exerted at the seam where the beams and the top sheet or the bottom sheet connect." Ex. 1015, ¶2. Moreover, that combination would do so in the same manner disclosed by Liu's Figure 3: adding additional "extending parts" to the opposing side of the terminal ends of a "U" or "]" shaped beam, and thereby increase the adhesion area between the beam and the top and bottom of the mattress. Ex. 1015, Fig. 3, ¶ 5. As in Liu itself, the surface area gained by adding Liu's L-shaped extending parts 41 to Hanlie's strap would "reduc[e] the pulling force exerted at the seam and ensur[e] the durability of the air mattress." *Id.* Additionally, as in Liu's Figure 3, this combination applies two separate extending parts (one at the top of the mattress and one on the bottom of the mattress) on the same side of Hanlie's strap. Because this modification uses Liu's components to modify Hanlie's strap in the same manner disclosed by Liu itself, a PHOSITA would understand that this modification would predictably and successfully address the problems identified by Liu. Thus, in my opinion, modifying

the Hanlie-Fireman combination using Liu in this manner would merely use a known technique (i.e. Liu's separate "extending parts") to improve a similar device (Hanlie's "air mattresses" with "straps") in the same way to yield predictable results.

94. Additionally, in my opinion, the addition of Liu would not negate or dissuade from the reasons for combining Hanlie and Fireman, discussed above. Liu, like Hanlie's discussion of its strap, does not disclose all the details regarding how to manufacture its beam, or the composition of its beam. Accordingly, in my opinion, Liu would only further motivate a PHOSITA to seek Fireman to combine with Hanlie in order to provide the manufacturing details for Hanlie's strap, as discussed above in Ground 1.

C. Dependent Claim 2

95. Claim 2 depends from Claim 1 and further recites the below-recited elements 2a-2b. In my opinion, for the following reasons, the combination of Hanlie and Fireman as described above in Claim 1, in further combination with Liu as described above, renders obvious the limitations of Claim 2.

1. Element 2a: "wherein the first and second weld sheets define a width corresponding to an overall width of the plurality of strands;"

96. In my opinion, this limitation is disclosed by both Hanlie and Fireman. As noted, it was well-within the knowledge of those of the prior art to make mesh-reinforced PVC laminates as a uniform material from which desired shapes can be

cut. Figures 2 and 5 of Hanlie depict the PVC layers of Hanlie's straps (i.e. the outer white portion 11) as co-extensive with the strap's inner mesh layer (i.e. the inner black portion 12) in the vertical extent of the strap. That is, the PVC layers and the mesh layer of Hanlie's strap are shown as terminating at the same end (i.e. the terminal ends of the "U" and "Z" shape), suggesting that they have been cut to size. In my opinion, this would disclose to a PHOSITA, or at least render obvious, that Hanlie's straps are simply cut from pre-fabricated PVC-mesh-PVC material to the needed dimensions, and therefore that the PVC layers (i.e. first and second weld sheet) and the mesh layers of Hanlie's strap (i.e. strands) are co-extensive in all directions, including its width. Moreover, in Figures 1, 3-4, and 6-8 of Hanlie (Figure 7 reproduced below), the PVC layers of Hanlie's PVC-mesh-PVC strap (item 1 in the figure) depict the width of the straps:

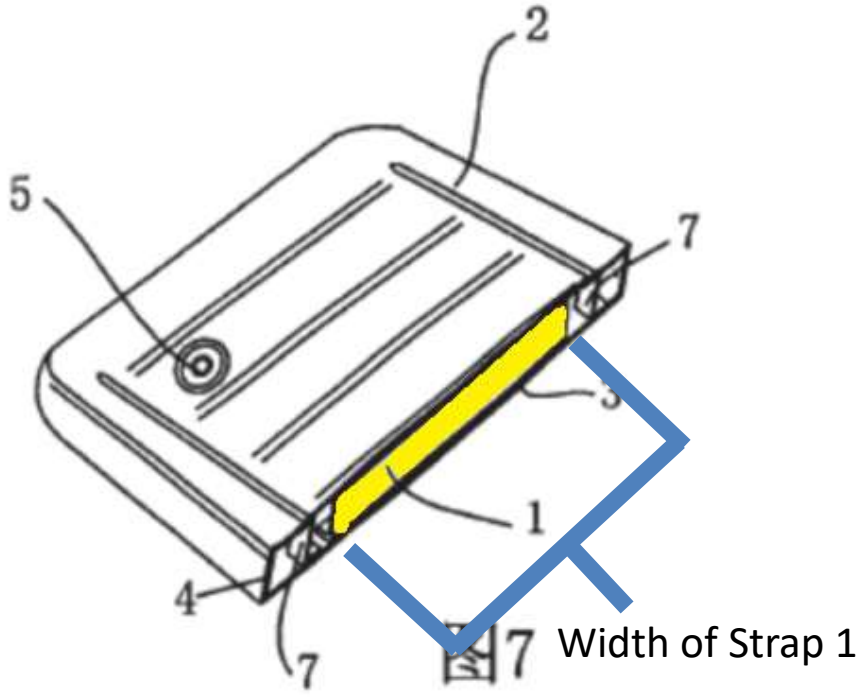

Hanlie, Figure 7 (annotated)

In light of these disclosures, a PHOSITA would understand Hanlie's strap as disclosing, or at least rendering obvious, "the first and second weld sheets define a width corresponding to an overall width of the plurality of strands."

97. Additionally, in my opinion, this limitation is also rendered obvious by Hanlie in combination with Fireman. As discussed above in Ground 1, it would be obvious to manufacture Hanlie's straps using Fireman's roller-based "hot lamination" procedure. In that procedure, "rolls containing translucent PVC stock and mesh stock" are "hot laminated" to form a 3-layer structure. (Ex. 1012 ¶ 21). In my opinion, a PHOSITA would understand that the result of Fireman's process is a single sheet of material (consisting of 3 layers) from which suitable material with

the desired dimensions may be cut. Indeed, Fireman's use of cut material reflected in Figures 2 and 3 of Fireman which depicts distinct pieces of Fireman's flexible wall, each of which is cut to the desired dimensions, and therefore having coterminous termination of the mesh and PVC layers in each panel. Ex. 1012, Fig. 2, 3, ¶ 23. An annotated version of Fireman's Figure 3 is below, showing where individual "panels" of Fireman's PVC-mesh-PVC flexible wall material are cut.

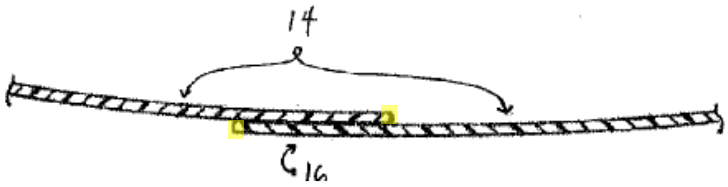

Fireman, Fig. 3 (Annotated)

98. When the output of Fireman's roller-based hot lamination process is cut to the desired width and length, the result is a material similar to the cutout perspective depicted in Figure 5a of Fireman: mesh and PVC layers that are coextensive and terminate at the same cut edges. In such a material, "the first and second weld sheets [i.e. the PVC layers of Fireman's three-layer construction] define a width corresponding to [i.e. are coextensive and conterminously terminate] an overall width of the plurality of strands [i.e. the horizontal extent of the set of vertical members of Fireman's mesh]." Indeed, in my opinion, there are only a limited number of ways to construct PVC-mesh-PVC laminated materials as recited in the '186 Patent. Given that manufacturers of inflatable mattresses often sell a variety of air mattresses in various sizes, a PHOSITA would recognize that the width and

height of the PVC-mesh-PVC tensioning structures would similarly be required to vary product-to-product. A PHOSITA would recognize that alternative for manufacturing PVC-mesh-PVC tensioning structures other than laminating and then cutting the materials to size would be impractical from a manufacturing perspective (i.e., requiring distinct, custom processes for each piece of material). Thus, this would further motivate a PHOSITA to utilize roller-based hot lamination, with pieces cut to size, as disclosed in Fireman.

99. Thus, in my opinion, Hanlie alone discloses this limitation, and the combination of Hanlie and Fireman renders this limitation obvious.

2. Element 2b: "and the tensioning structure further comprises a plurality of weld strips affixed to a first side of the weld sheet."

100. In my opinion, for the reasons below, this limitation is rendered obvious by modifying the Hanlie-Fireman combination in view of Liu (Ex. 1015), as described above. As noted, Hanlie discloses that its "strap" is affixed to the top and the bottom of the interior of the mattress by bending the PVC-mesh-PVC strap into a "Z shape" or "U shape and "sew[ing] to or fus[ing] [it] into the top and bottom" of the mattress. Ex. 1011, 14, Figs. 2, 5. However, other geometrical configurations were known in the art for attaching a tensioning structure to the top and bottom sheets of an inflatable mattress.

101. In particular, Liu discloses a "[b]eam construction of air mattresses." Ex. 1015, ¶1. Liu's "beam" is a tensioning structure like Hanlie's strap; it connects the interior sides of the top and bottom of Liu's mattress. Ex. 1015, Abstract. Like Hanlie's strap, it is a long planar structure. *Id.*, Figs. 1-4; Ex. 1011, Figs. 3, 6, 7, 8. Liu notes that prior art beam configurations (such as Hanlie's "U" and "Z" configurations) suffer from the problem that "[a] vertical direction pulling force is created against the top sheet and the bottom sheet after inflation, with more force being exerted at the seam where the beams and the top sheet or the bottom sheet connect." Ex. 1015, ¶2. Thus "[t]he place where the beams and the top sheet or the bottom sheet connect may easily come apart or be torn apart." *Id.*

102. As noted, Liu addresses this problem with "I," "J, "X" or "Y" shaped beams, which use "extending parts" to create "added connecting area between the beams and the top sheet and the bottom sheet." *Id.*, ¶¶ 2, 4, Figs. 1-3. As noted above, some of these "extending parts" are implemented by adding separate L-shaped strips onto the opposing side of an otherwise "U" shaped beam. In the below annotated versions of Liu's Figures 1 and 3, these added "extending parts 41" are highlighted in blue, whereas the "]"-shaped beam is highlighted in yellow:

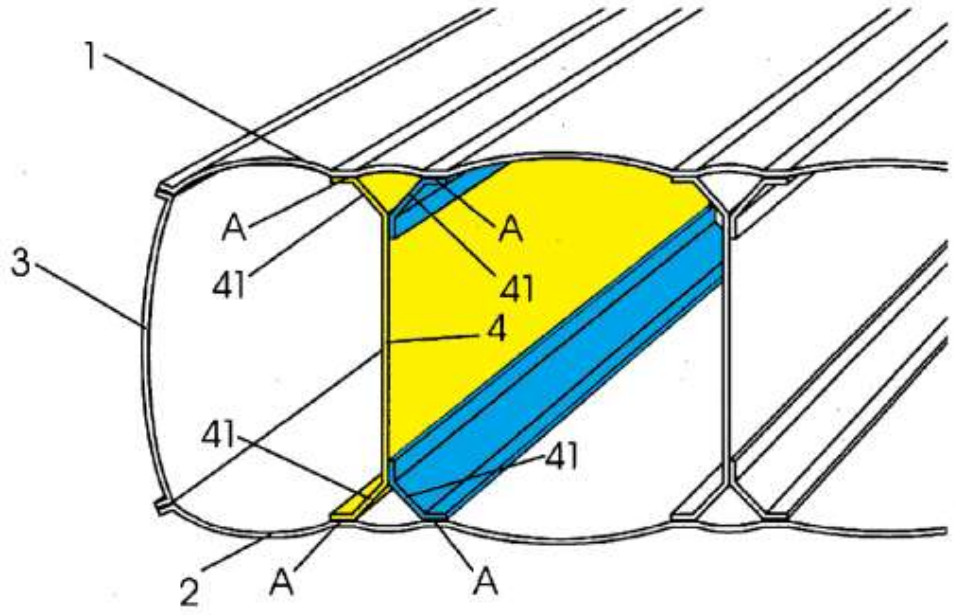

Annotated Version of Liu, Figure 1

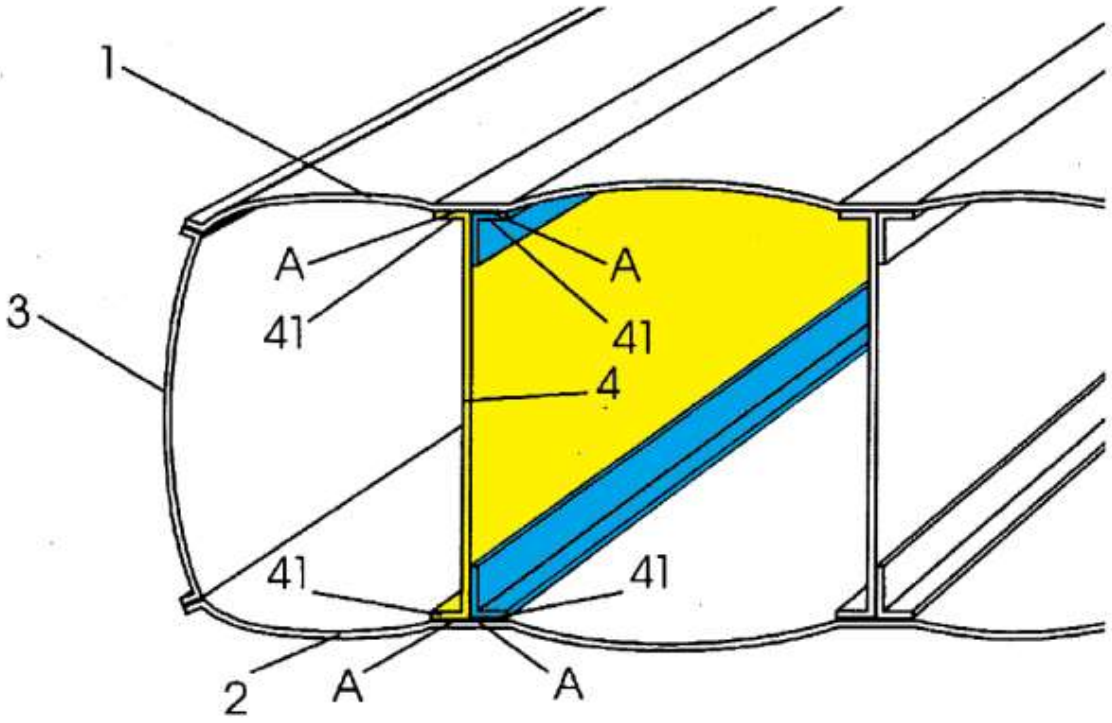

Annotated Version of Liu, Figure 3

103. As discussed in detail above, a PHOSITA would be motivated by Liu to increase the surface area of Hanlie's strap connection, adding Liu's L-shaped extending parts to the strap of Hanlie's Figure 5, as shown in the below modified and annotated diagram:

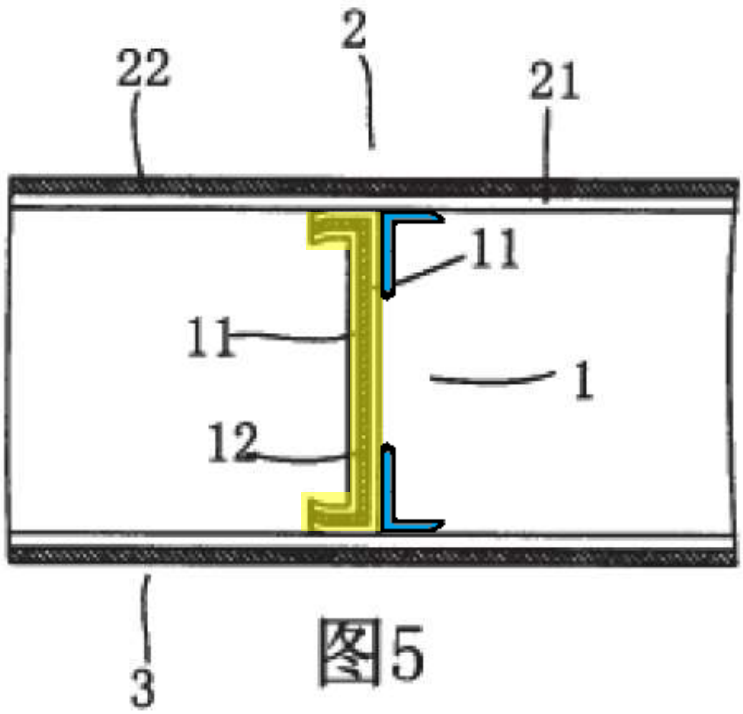

Modified and Annotated Version of Figure 5 of Hanlie with portions of Liu Figure 3 added

104. In particular, using Liu's "extending parts" to further reinforce the connection between Hanlie's "strap" and the interior surfaces of the top and bottom of the mattress would address the problem that Liu identifies with Hanlie's "U" and "Z" shaped configurations that "more force being exerted at the seam where the beams and the top sheet or the bottom sheet connect." Ex. 1015, ¶2. Moreover, the

combination does so in the same manner disclosed by Liu; by adding "extending parts" to the opposing side of the terminal ends of a "U" or "]" shaped beam to increase the adhesion area between the beam and the top and bottom of the mattress.

105. This combination of Liu with Hanlie and Fireman would satisfy the claim limitation "the tensioning structure further comprises a plurality of weld strips affixed to a first side of the weld sheet." In particular, in my opinion, the added extending parts of Liu are "weld strips" as claimed and described in the '186 Patent. The '186 Patent depicts its "weld strips" as long, thin, and narrow planar strips, made of PVC, and welded so to "connect" the tensioning structure to the top and bottom sheets (upper and lower material 1, 2). Ex. 1001, 8:56-9:21, Figs. 1, 8, 17. Similarly, Liu's separate extending parts are depicted as long, thin, and narrow planar strips added to the U-shaped beams. Ex. 1015, Figs. 1, 3. Moreover, Liu describes that "[t]he two ends of beam 4 have extending parts 41 that are connected with a top sheet 1 or a bottom sheet 2, respectively, by adoption of high-frequency welding." Ex. 1015, ¶ 11. Although Liu does not expressly disclose using PVC for its weld strips, using PVC for the interior and exterior components of a mattress was well-known in the art and in the background knowledge of a PHOSITA. Indeed, given that Hanlie already discloses using PVC for the top and bottom sides of its mattress, and for the outer layers of its strap, it would be obvious to select PVC as the material for Liu's extending parts in modifying Hanlie. Indeed, using the same material as

the top and bottom side of the mattress and the extending parts would ensure that they could be suitably welded together.

106. As to the claim's limitation that the weld strips be "affixed" to the same "first side," Liu's Figures 1 and 3 already depict a U-shaped configuration with a plurality (i.e. two) of weld strips (i.e. extending parts) on the same side of a tensioning structure (i.e. Liu's beam). Ex. 1015, Figs. 1, 2. Additionally, like the main beam portion in Liu's Figures 1 and 2, Hanlie's U-shaped configuration has flat side (i.e. the right side of the strap in Hanlie's Figure 5), which is ready to receive such extending parts. Ex. 1001, Fig. 5. Accordingly, in my opinion, it would be obvious to a PHOSITA to combine Liu and Hanlie by adding the weld strips (i.e. Liu's separate extending parts) to the same side of Hanlie's tensioning structure (i.e. strap).

107. Thus, in my opinion, modifying the Hanlie-Fireman combination with Liu in the manner claimed would have merely been using a known technique (reinforcing using Liu's added L-shaped extending parts) to improve a similar device (Hanlie's strap) to yield predictable results. Thus, in my opinion, the combination of Hanlie, Fireman and Liu renders this limitation obvious.

D. Dependent Claim 4

108. Claim 4 depends from Claim 2 and further recites "wherein the weld sheet comprises a continuous piece of material extending across the plurality of

strands." In my opinion, for the following reasons, the combination of Hanlie, Fireman, and Liu as described above in Ground 2, Claim 2 renders obvious the limitation added by Claim 4.

109. In my opinion, this limitation is disclosed by both Hanlie and Fireman. In particular, Hanlie describes its straps as being composed of "straps' two outer layers of the mesh covered by PVC fabric is fused or sewed to the inner layer." Ex. 1011, 13. Moreover, Figures 2, 3, 5, 6, 7, and 8 of Hanlie depict the straps' mesh layer as being uniformly covered by a continuous layer of PVC film. Thus, a PHOSITA would understand Hanlie as disclosing this limitation.

110. Additionally, as discussed above, Fireman discloses a "hot lamination" process for manufacturing its tri-layer PVC-mesh-PVC wall material. As discussed in detail in Ground 1, it would be obvious to use Fireman's "hot lamination" process to manufacture the PVC-mesh-PVC straps of Hanlie. Fireman describes that its "hot lamination procedure employs an arrangement of rolls containing translucent PVC stock and mesh stock," that "PVC stock may be heated to soften the PVC, and "[t]he stock is then fed off the rolls, into rollers or other compression means" such that "the mesh layer is interposed between the two PVC layers." Ex. 1012 ¶ 21. A PHOSITA would recognize that the result of this process is that the PVC layers [i.e. weld sheets] each comprise a continuous piece of material extending across the mesh [i.e. the plurality of strands]. Indeed, this is consistent with the depiction of the PVC-mesh-

PVC material in Figures 2-5 of Fireman, which depict the PVC layers covering the mesh as a continuous and uniform material, from which individual "panels" are cut to the desired dimension. Ex. 1012, Figs. 2, 3 (showing flexible wall material 12 in portions cut to size), 4-5.

111. Thus, in my opinion, the combination of Hanlie and Fireman renders this limitation obvious.

E. Dependent Claim 5

112. Claim 5 depends from Claim 2 and further recites "wherein the tensioning structure further comprises at least one reinforcement strand disposed substantially perpendicular to the plurality of strands, the at least one reinforcement strand fixed to at least one of the plurality of weld strips." In my opinion, the combination of Hanlie, Fireman, and Liu as described above in Ground 2, Claim 2 renders obvious the limitation added by Claim 5.

113. As I discuss above in Ground 1, element 1d above, a PHOSITA would be motivated to orient the vertical members of Fireman's mesh in the direction of tension of Hanlie's strap. Accordingly, the horizontal members of Fireman's square grid mesh would be "disposed substantially perpendicular" to the vertical members of Fireman's mesh in the above-described combination of Fireman and Hanlie. Ex. 1012, Figs. 5A, 5B, ¶19.

114. Additionally, in my opinion, Fireman's horizontal members, in combination with Hanlie's strap, would be "reinforcement strands" as claimed. In particular, the '186 Patent discloses that "reinforcing strands" are "substantially perpendicular to [the tensile] strands" (Ex. 1001, 7:51-57), and "further improve the strength" of the "tensioning structure" (*Id.,* 13:9-11). Similarly, as depicted in Fireman's Figure 5A, the horizontal members of the square-grid mesh of the Hanlie-Fireman combination are: (1) perpendicular to the vertical members of the mesh; and (2) reinforce and improve the strength of the structure. Ex. 1012, Figs. 5A, 5B, ¶19. The '186 Patent also describes the "[r]einforcing strands 5, when provided, may be coupled to tensile strands 32, such as by folding strands 32 over reinforcing strands 5, tying strands 5, 32 to one another, or adhesively securing strands 5, 32 to one another." Ex. 1001, 7:53-57. Similarly, as shown in Fireman's Figure 5A, the horizontal members of Fireman's mesh are coupled to the vertical members by being woven around the vertical members, and then being sandwiched by the PVC layers.

115. Finally, the '186 Patent describes that "[w]hen so coupled, reinforcing strands 5 provide additional surface area contact with weld strips 31 and thereby improve the resistance of securing strands 5 to pulling free from weld strips 31." Ex. 1001, 7:57-60. The "weld strips" of the '186 Patent are used to reinforce and attach the strands to the top and bottom of the mattress. Ex. 1001, Fig. 1, element 31, 7:40-50. In the context of the Hanlie invention, the terminal portions of the U and Z-

shaped strap provide a similar structure and function as the weld strips of the ’186 Patent. Because Hanlie’s Figure 2 and Figure 5 depict the mesh layer as extending through the entire length of the strap, the horizontal members of Fireman’s mesh would be present in the terminal portions of the strap, and, like the reinforcing strands of the ’186 Patent would reinforce the terminal portion in adhering the vertical strands to the top and bottom of the mattress. Ex. 1001, 7:547-60. Indeed, a PHOSITA would recognize that, given Fireman’s teaching that the PVC layers touch “the interstices of the mesh” (Ex. 1012, ¶ 21), the PVC-mesh-PVC strap of the Fireman-Hanlie combination would have a textured surface on the outside surface of the PVC layers, created by the hot lamination process and the inner mesh layer. A PHOSITA would recognize that such textured surface which would help assist in bonding and adherence of the PVC-mesh-PVC strap to the top and bottom of the mattress, just as the reinforcement strands provide for in the specification of the ’186 Patent. Thus, in my opinion, the horizontal members of Fireman’s mesh, in the Hanlie-Fireman combination, are consistent with the description of “reinforcement strands” in the ’186 Patent’s specification and therefore satisfy and render obvious this limitation.

116. Moreover, as discussed above in Ground 2, Claim 2, element 2b in the context of the combination of Hanlie, Fireman, and Liu, Liu’s extending parts are also weld strips. In my opinion, a PHOSITA would be motivated to use the same

PVC-mesh-PVC material used in Hanlie's strap (as combined with Fireman's mesh) in Liu's extending parts, as that would reduce the number of dissimilar materials and would provide the same strength benefits that Hanlie teaches for using such material for the straps. Accordingly, in the combination of Hanlie, Fireman, and Liu, the horizontal members of Fireman's mesh would be present in the extending parts, and thus would similarly comprise reinforcement strands by improving the adherence of the strap and its vertical strands to the top and bottom of the mattress. Thus, the limitation "the at least one reinforcement strand fixed to at least one of the plurality of weld strips" would be satisfied in the Hanlie-Fireman-Liu combination by both : (1) having reinforcement strands (i.e. horizontal members of the Fireman mesh) in the extending parts, as well as (2) having reinforcement strands in the portions of the Hanlie-Fireman strap which contacts the extending parts (because the horizontal members would be present throughout the extent of the Hanlie-Fireman strap).

117. Thus, in my opinion, the combination of Hanlie and Fireman renders this limitation obvious.

X. GROUND 3: OBVIOUSNESS OF CLAIMS 2-5 UNDER 35 U.S.C. § 103 OVER HANLIE IN VIEW OF FIREMAN, LIU, AND SONG

A. Overview of Song

118. Song is directed to "an inflatable pad having reinforcing belts." Ex. 1018, ¶2. Song teaches that, in the prior art, "the side portions of each reinforcing belt become hard after welding," and that "[a] connecting point between the

intermediate portion and each side portion is bent." *Id.* ¶5 (numbers omitted). Moreover, Song teaches that when pressure from a "user's weight" "is applied to the mattress," the "connecting point" between the reinforcement structure and the mattress' sheets is "tensionally extended" and "may be broken after a long period of use." *Id.* (numbers omitted).

119. To address this problem, Song discloses an improved reinforcement structure (i.e. tensioning structure) comprising: (1) "coupling belt 31" attached to the top and bottom layers; (2) "opposite looped end portions 321" connected to the central portions 310 of the coupling belt; (4) "generally-vertical intermediate portion 322 interconnecting the looped end portions 321." Ex. 1018 ¶20, Fig. 3.

120. Song further discloses that this improved reinforcement solves the problem of tearing between the beam and the top and bottom sheets. In particular, it discloses that the "vertical pull force from the main reinforcing belt 32 is directly applied to the central portion 310 of each coupling belt 31" and "[a]s a result, the vertical pull force" "is divided onto two pull forces, each of which is applied to a corresponding welding portion of each coupling belt 31." *Id.* ¶ 21. A PHOSITA would thus understand Song as disclosing that distinct components may be beneficially used for: (1) the main portion of an inflatable mattress's beam; and (2) the attachment between the beam and the top/bottom sheet to provide additional area for attachment. *Id.*. A PHOSITA would also understand Song's disclosure as

teaching that a symmetrical configuration (such as Song's T-shaped coupling belt), provides the further benefit of symmetrical distribution of forces, thereby lessening forces on each side of the weld.

B. Combination of Song with Hanlie, Fireman, Liu, and Song

121. As discussed above in Ground 2, Claim 2, Liu discloses that U and Z-shaped beams, such as disclosed in Hanlie, have the problem that "[a] vertical direction pulling force is created against the top sheet and the bottom sheet after inflation, with more force being exerted at the seam where the beams and the top sheet or the bottom sheet connect," and thus "[t]he place where the beams and the top sheet or the bottom sheet connect may easily come apart or be torn apart." Ex. 1015, ¶2. Although, as discussed above in Ground 2, element 2b, adding two "extending parts" of Liu to Hanlie's strap would be one predictable way of using Liu to improve Hanlie and thereby solve this problem. Other predictable variations would be obvious to a PHOSITA, including the manner recited in Claim 3.

122. As discussed above, Song describes the same problem as Liu, but further elaborates that, in solving that problem, it is beneficial to have a symmetrical distribution of forces, which may be implemented by separating the vertical extent of the tensioning structure from the components which adhere the tensioning structure to the top and bottom sheets. Ex. 1018 ¶¶20, 21. In light of these disclosures of Song, and the problem disclosed in Liu (discussed in detail above in

Ground 2), a PHOSITA would be motivated to combine Liu's "extending parts" with Hanlie and Fireman in the manner claimed.

123. In particular, in my opinion, a PHOSITA would be motivated by Song and Liu to modify Hanlie to use Liu's "extending parts 41" as follows. First, Hanlie's PVC-mesh-PVC strap would be shortened by removing the existing terminal ends of the U-shape or Z-shape such that length of the strap spanned the gap between the top and bottom mattress and went no further. This is consistent with, and would be motivated by, Song's teaching of a "vertical intermediate portion" as a separate component from the "belt body 312." Ex. 1018,¶¶5, 20. In particular, Song's "vertical intermediate portion" (shown highlighted in the below figure) does not extend past the extent of the gap of the mattress (as in the terminal portions of Hanlie's "U" and "Z" configurations). Rather, it only extends as far as needed to reach the components which are used to adhere the tensioning structures to the top and bottom of the mattress.

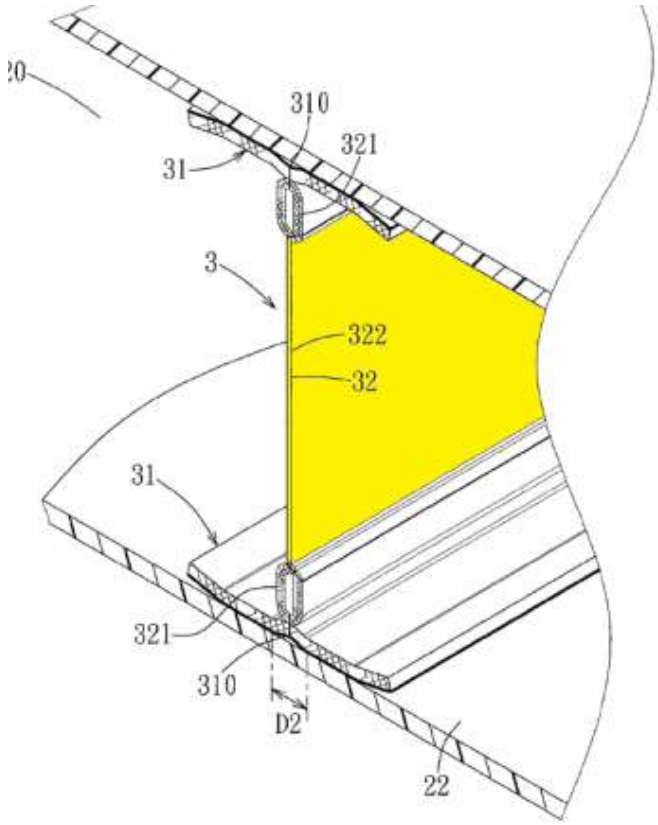

Song, Figure 3 (cropped and annotated)

124. Second, two of the additional L-shaped "extending parts 41" of PVC in the configuration of Liu would be used to attach the shortened version of Hanlie's PVC-mesh-PVC strap on the interior of both of the top and bottom of the mattress (i.e. four separate "extending parts" total per beam). This would be motivated by Song's teaching of the benefit of a symmetrical structure for connecting the beam to the top/bottom sheet. In particular, using only one pair of L-shaped extending parts to reinforce Hanlie, as illustrated in Figures 1 and 2 of Liu would result in some asymmetrical forces, as the tensile forces would tend to most directly distributed to the U-shaped portion of the beam (which is a single component) rather than to the

added extending part. Ex. 1015, Figs. 1, 3. A modified version of Hanlie's Figure 5 is shown below, with four "extending parts 41" from Liu's Figure 3 added and highlighted in blue, and with the modified, shortened strap of Hanlie highlighted in yellow.[1]

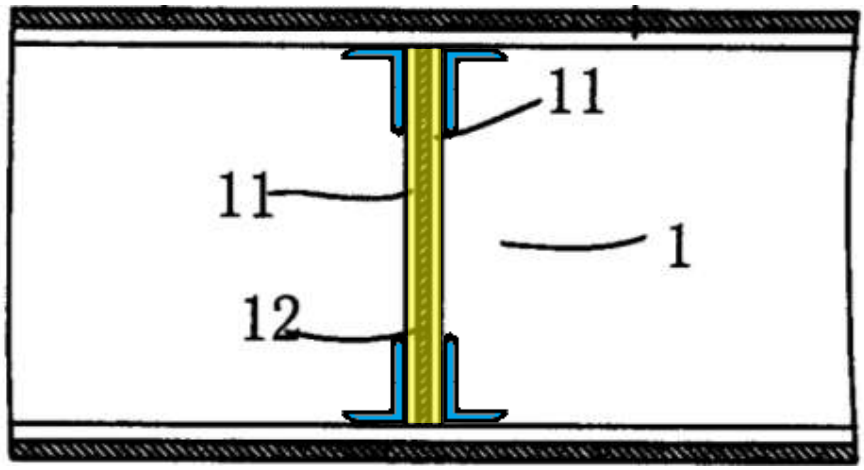

Modified and Annotated Version of Figure 5 of Hanlie with portions of Liu Figure 3 added

In my opinion, a PHOSITA would be motivated by Song to further modify the Hanlie-Fireman combination by shortening Hanlie's strap and adding four of Liu's separate extending parts as shown in this modified and annotated figure

125. Moreover, this configuration (using Liu's "extending parts" to adhere Hanlie's "strap" to the interior surfaces of the top and bottom of the mattress) would address the problem that Liu and Song identify with Hanlie's "U" and "Z" shaped configurations: "more force being exerted at the seam where the beams and the top

[1] Although this figure shows the "extending parts 41" of Liu's Figure 3, the "extending parts 41" of Liu's Figure 1 are equally applicable.

sheet or the bottom sheet connect." Ex. 1015, ¶2; Ex. 1018, ¶5. Indeed, this combination does so in the same manner of Liu and Song: using separate connecting components (i.e. Liu's L-shaped extending parts) to add connecting area between the beams and the top sheet and the bottom sheet, thus reducing the pulling force exerted at the seam and ensuring the durability of the air mattress.

126. Additionally, in my opinion, the addition of Song would not negate or dissuade from the reasons for combining Hanlie, Fireman, and Liu, as discussed above. Although Song provides details regarding a different beam structure and a different mechanism for connecting that beam to the top and bottom sheets than disclosed in Liu and Hanlie, in light of the number of distinct components of various different materials in Song's preferred embodiment, a PHOSITA would rather use two components (i.e. a shortened version of Hanlie's strap and PVC versions of Liu's added extending parts) for manufacturing simplicity than the specific tensioning structure disclosed in Song. Additionally, Song does not disclose a mesh tensioning structure, and therefore a PHOSITA would still be motivated to select Fireman for its disclosure about the details of such a mesh in implementing Hanlie.

C. Dependent Claim 2

127. Claim 2 depends from Claim 1 and further recites "wherein the first and second weld sheets define a width corresponding to an overall width of the plurality of strands, and." In my opinion, for the following reasons, the combination of Hanlie

and Fireman as described above in Claim 1, in further combination with Liu and Song as described above, renders obvious the limitations of Claim 2.

1. Element 2a: "wherein the first and second weld sheets define a width corresponding to an overall width of the plurality of strands;"

128. This limitation is disclosed by Hanlie and Fireman for the reasons described above in Ground 2, element 2a. In particular, Figures 2 and 5 of Hanlie depict the PVC layers of Hanlie's straps (i.e. the outer white portion 11) as co-extensive with the strap's inner mesh layer (i.e. the inner black portion 12) in the vertical extent of the strap. Ex. 1011, Figs. 2, 5. Because the PVC layers and the mesh layer of Hanlie's strap are shown as terminating at the same end (i.e. the terminal ends of the "U" and "Z" shape), it would suggest to a PHOSITA that they have been cut to size, and thus discloses, or at least renders obvious, that Hanlie's straps are cut to size in all directions, including their width. *See also id.*, Figs. 1, 3-4, and 6-8.

129. Additionally, this limitation is also disclosed by Fireman's hot lamination process for the reasons described above in Ground 2, element 2a. In particular, a PHOSITA would understand that the result of Fireman's roller-based hot lamination process is a single sheet of material (consisting of 3 layers) from which suitable material with the desired dimensions may be cut. Ex. 1012, ¶ 21. Indeed, Fireman's use of cut material is reflected in Figures 2 and 3 of Fireman

which depict distinct pieces of Fireman's flexible wall, each of which is cut to the desired dimensions, with coterminous termination of the mesh and PVC layers in each panel. Ex. 1012, Fig. 2, 5, ¶ 23

2. Element 2b: "and the tensioning structure further comprises a plurality of weld strips affixed to a first side of the weld sheet."

130. In my opinion, for the reasons below, this limitation is rendered obvious by modifying the Hanlie-Fireman combination in view of Liu (Ex. 1015) and Song (Ex. 1018), as described above. As noted, Hanlie discloses that its "strap" is affixed to the top and the bottom of the interior of the mattress by bending the PVC-mesh-PVC strap into a "Z shape" or "U shape and "sew[ing] to or fus[ing] [it] into the top and bottom" of the mattress. Ex. 1011, 14, Figs. 2, 5. However, other geometrical configurations were known in the art for attaching a tensioning structure to the top and bottom sheets of an inflatable mattress.

131. In particular, Liu discloses an air mattress with "beams" as tensioning structure. Ex. 1015, Abstract, ¶1. Liu notes that prior art beam configurations (such as Hanlie's "U" and "Z" configurations) suffer from "excess" force being exerted at the seam where the beams and the top sheet or the bottom sheet connect, resulting in tearing. Ex. 1015, ¶2. Similarly, Song notes that "[a]connecting point between the intermediate portion and each side portion" of prior art tensioning structure "may be broken after a long period of use." Ex. 1018, ¶5.

132. As noted, Liu addresses this problem using "extending parts" to create "added connecting area between the beams and the top sheet and the bottom sheet." *Id.*, ¶¶ 2, 4, Figs. 1-3. As discussed above in detail in Ground 2, element 2b, Liu's figures depict "extending parts" as implemented by adding separate L-shaped strips onto an existing U-shaped beam.

133. As discussed in detail above, in light of Song's teaching regarding the benefits of symmetrical forces, a PHOSITA would be motivated by Song and Liu to shorten Hanlie's strap to accommodate adding four of Liu's L-shaped extending parts to the strap of Hanlie's Figure 5, as shown in the below modified and annotated diagram:

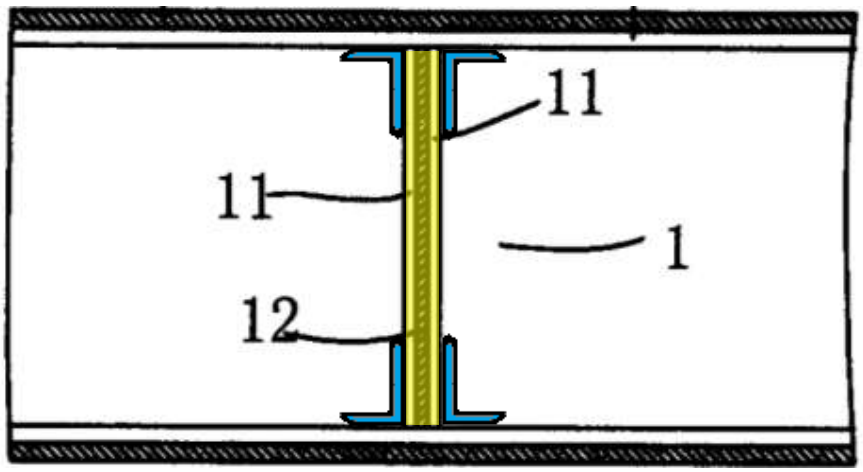

Modified and Annotated Version of Figure 5 of Hanlie with portions of Liu Figure 3 added

134. In particular, using Liu's "extending parts" to further reinforce the connection between Hanlie's "strap" and the interior surfaces of the top and bottom of the mattress would address the problem that Liu identifies with Hanlie's "U" and

"Z" shaped configurations: "more force being exerted at the seam where the beams and the top sheet or the bottom sheet connect." Ex. 1015, ¶2. Moreover, the combination does so in the same manner disclosed by Liu: adding "extending parts" to the opposing side of the terminal ends of a "U" or "]" shaped beam to increase the adhesion area between the beam and the top and bottom of the mattress.

135. This combination of Liu and Song with Hanlie and Fireman would satisfy the claim limitation "the tensioning structure further comprises a plurality of weld strips affixed to a first side of the weld sheet." In particular, as discussed above in Ground 2, element 2b, the added extending parts of Liu are "weld strips" as claimed and described in the '186 Patent. Like the "weld strips" of the '186 Patent, Liu's weld strips are long, thin, and narrow planar strips, which are welded so to "connect" the tensioning structure to the top and bottom sheets (upper and lower material 1, 2). Ex. 1001, 8:56-9:21, Figs. 1, 8, 17; Ex. 1015, Figs. 1, 3, ¶13. Moreover, because two "extending parts" are added to each side of the shortened version of Hanlie's strap, either of the sides of the strap in this combination would be a "first side" to which "a plurality of weld strips" are "affixed" as claimed.

136. Thus, in my opinion, modifying the Hanlie-Fireman combination with Liu and Song in the manner claimed would have merely been using known techniques (Song's separate, symmetrical components, and Liu's addition of surface area using added L-shaped extending parts) to improve a similar device (Hanlie's

strap) to yield predictable results. Thus, in my opinion, the combination of Hanlie, Fireman, Liu and Song renders this limitation obvious.

D. Dependent Claim 3

137. Claim 3 depends from Claim 2 and further recites "wherein another of the plurality of weld strips is affixed to a second side of the weld sheet opposite the first side." In my opinion, for the following reasons, the combination of Hanlie, Fireman, Liu, and Song as described above renders obvious the limitation added by Claim 3 for the reasons discussed above in Ground 3, element 2b.

138. As noted above, a PHOSITA would have been motivated by Song's teaching of the benefit of a symmetrical structure for connecting the beam to the top/bottom sheet to modify Hanlie by adding four "extending parts 41" from Liu's Figure 3, shown highlighted in blue, and with the modified, shortened strap of Hanlie highlighted in yellow.[2]

[2] Although this figure shows the "extending parts 41" of Liu's Figure 3, the "extending parts 41" of Liu's Figure 1 are equally applicable.

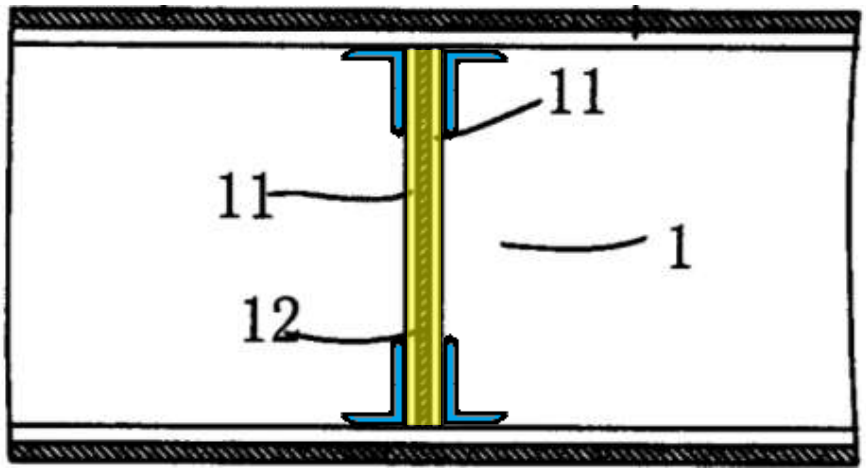

Modified and Annotated Version of Figure 5 of Hanlie with portions of Liu Figure 3 added

139. This combination of Liu and Song with Hanlie and Fireman would satisfy the claim limitation "wherein another of the plurality of weld strips is affixed to a second side of the weld sheet opposite the first side." In particular, as discussed above in Ground 3, element 2b, Liu's extending parts are weld strips. In the configuration of the above combination, and in light of Song's teaching of using separate components and symmetrical forces, there would be a total of four extending parts (i.e. weld strips), two on each side. Thus, this combination of Hanlie, Fireman, Liu and Song would render obvious "another of the plurality of weld strips is affixed to a second side of the weld sheet opposite the first side."

140. Thus, in my opinion, the combination of Hanlie, Fireman, Liu, and Song renders this limitation obvious.

E. Dependent Claim 4

141. Claim 4 depends from Claim 2 and further recites "wherein the weld sheet comprises a continuous piece of material extending across the plurality of strands." As explained in further detail above in Ground 2, Claim 4, Hanlie and Fireman disclose this limitation. In particular, Hanlie describes and depicts its straps as being composed of "straps' two outer layers of the mesh covered by PVC fabric is fused or sewed to the inner layer." Ex. 1011, 13, Figs. 2, 5. Similarly, Fireman's hot lamination process results in the PVC layers covering the mesh as a continuous and uniform material, from which individual "panels" are cut to the desired dimension. Ex. 1012, ¶¶19-21, Figs. 2, 3 (showing flexible wall material 12 in portions cut to size), 4-5. Thus, in my opinion, the combination of Hanlie, Fireman, Liu, and Song renders this claim obvious.

F. Dependent Claim 5

142. Claim 5 depends from Claim 2 and further recites "wherein the tensioning structure further comprises at least one reinforcement strand disposed substantially perpendicular to the plurality of strands, the at least one reinforcement strand fixed to at least one of the plurality of weld strips." As explained in further detail above in Ground 2, Claim 5, Fireman's mesh discloses this limitation. In particular, as depicted in Fireman's Figure 5A, the horizontal members of the square-grid mesh of the Hanlie-Fireman combination are: (1) perpendicular to the vertical

members of the mesh; (2) reinforce and improve the strength of the structure; (3) are coupled to the vertical strands of Fireman's mesh; and (4) act to help adhere Hanlie's strap (and Liu's extending parts) to the top and bottom of the mattress. Ex. 1012, Figs. 5A, 5B, ¶19.

XI. GROUND 4: OBVIOUSNESS OF CLAIMS 1, 6-7, 9-10 UNDER 35 U.S.C. § 103 OVER PETERSON IN VIEW OF FIREMAN AND HANLIE

A. Overview of Peterson

143. Peterson is directed to an "inflatable swimming pool and supporting shell." Ex. 1028 at Title. Many of the features of Peterson's pool are conventional features of an inflatable structure. For example, it uses "PVC" components, and has "an inner vertical side wall 12 [i.e. a first sheet]" and "an outer vertical side wall 14 [i.e. a second sheet]." Ex. 1028 at 2:4-6, Fig. 4 at element 12.

144. Peterson teaches that customers desire larger and deeper pools, but prior art inflatable pools have been "unsuitable with the increased depth due to the tremendous increase in water pressure on the sides of the pool which causes the walls to deform and tear." *Id.* at 1:17-22.

145. Peterson seeks to solve this problem with an improved inflatable swimming pool containing additional reinforcement. In particular, Peterson discloses that its improved inflatable swimming pool has "inner and outer vertical side walls" which are supported by a "plurality of vertical interior supporting webs"

which "extend[] between and connect[]" the interior surfaces of those walls. *Id.* at Abstract. The "vertical support web 16 extends radially between the inner and outer side walls 12, 14 at spaced intervals of approximately 15° to form a series of I-beam supports around the circumference of the interior annular cavity 20." *Id.*, 2:11-15. Like the walls, Peterson's vertical support webs are made of PVC. *Id.*, Abstract, 2:4-8. "The interior cavity 20" of the "inflatable pool" "is defined by the spacing between the side walls 12, 14 when the pool 10 is inflated." *Id.* at 2:15-16.

B. Combination of Peterson, Hanlie, and Fireman

146. As I explain above, Peterson teaches an inflatable pool with beams in the form of vertical support web beams, made of PVC, which act as tensioning structures to maintain the integrity of the pool's shape and to resist forces from the water. Ex. 1028, Abstract, 2:11-15, 2:25-30, 2:59-61, Fig. 4. However, Hanlie describes a problem with tensioning members comprised solely of a single layer of PVC, such as in Peterson: "[s]traps with only one layer of PVC . . . are very difficult to be sewed to or fused to the surface of the" inflatable product "so the joining is not strong, which makes it prone to break off." Ex. 1011, 13. To address this problem, Hanlie discloses an improved, reinforced strap made of PVC-mesh-PVC, as discussed in detail above in Ground 1, where ""[t]he straps' two outer layers are made of PVC film, while the inner layer is made of chemical fiber, nylon or cotton mesh in between." Ex. 1011, Abstract, 11. Hanlie's straps serve a similar purpose

as Peterson's webs, i.e. to span and connect two spaced layers of PVC sheets of an inflatable product and to resist tension.

147. In my opinion, a PHOSITA would be motivated by Hanlie's disclosure regarding the problems of using a single layer of PVC material as a tensioning structure for an inflatable product to modify Peterson by using Hanlie's PVC-mesh-PVC material as the material for Peterson's vertical support webs. This modification is also further motivated by Peterson's disclosure that consumers desire increasingly deep pools (Ex. 1028, 1:17-22), which would result in increasing forces that would exacerbate the "break off" problem identified in Hanlie.

148. Hanlie is reasonably pertinent to implementing Peterson's vertical support web because both Hanlie's strap and Peterson's vertical supports are tensioning structures directed to the same purpose: resisting tension in the air-filled gap between the outer two layers of an inflatable structure. Although Fireman's three-layer structure is in an exterior wall of the inflatable structure, rather than an internal tensioning structure like Hanlie, a PHOSITA would recognize them as solving the same problem: resisting tension. Fireman expressly explains that the "mesh layer 42 enhances the tensile strength of the flexible wall 12, increasing the durability of the structure and allowing larger swimming pools to be constructed, compared to flexible walls made without a reinforcing mesh layer." Ex. 1012, ¶19. Although Peterson is directed to an inflatable pool, whereas Hanlie is directed to an

inflatable mattress, a PHOSITA would consider them as both being in the same field of endeavor: durable consumer inflatable structures. In my opinion, a PHOSITA would find Hanlie's PVC-mesh-PVC material directly applicable in replacing the PVC-only vertical support web of Peterson.

149. Thus, in my opinion, using Hanlie's PVC-mesh-PVC material for Peterson's straps would be simple substitution of one known element [i.e. Hanlie's PVC-mesh-PVC tensioning structures] for another [i.e. the webs of Peterson's inflatable pool] to obtain predictable results.

150. As noted above in Ground 1, although Hanlie discloses a "mesh" layer for its PVC-mesh-PVC straps, Hanlie does not disclose the specific configuration of its mesh layer. As described above in detail in Ground 1, it would be obvious to select Fireman's square grid mesh in implementing the mesh layer of Hanlie's PVC-mesh-PVC material. In particular, a PHOSITA trying to implement Hanlie's invention would naturally look to references describing the use of a square grid mesh in a PVC-mesh-PVC laminated tensile structure for an inflatable product. Fireman is exactly such a reference. Ex. 1012, ¶19. Fireman's mesh layer addresses the same problem as the mesh layer of Hanlie's straps; it is used to reinforce the tension-resisting structure, increasing its durability and its ability to resist tension, thereby making a durable inflatable structure that can endure a variety of forces while maintaining its inflated shape. *Id.*

151. Also, as noted above in Ground 1, although Hanlie discloses "fusing" its PVC layers to the inner mesh layer of its straps (Ex. 1011, 13), Hanlie does not disclose a detailed step-by-step manufacturing process for making its PVC-mesh-PVC materials. As described above in detail in Ground 1, it would be obvious to use Fireman's roller-based hot lamination process in manufacturing Hanlie's PVC-mesh-PVC material. In particular, a PHOSITA trying to implement Hanlie's invention would naturally look to references describing the manufacturing steps for making a PVC-mesh-PVC laminated tension-resisting structure for an inflatable product. Fireman's hot lamination process provides exactly that disclosure. Ex. 1012, ¶¶19, 21. Fireman's hot lamination addresses the same problem as Hanlie's "fusing"—it is used to manufacture a durable, reinforced tension-resisting structure for an inflatable product—but Fireman provides additional details regarding the exact steps for making such a structure that would be useful to a PHOSITA in implementing Hanlie's PVC-mesh-PVC. *Id.*

152. Additionally, in my opinion, the addition of Fireman would not negate or dissuade from the reasons for combining Hanlie and Peterson, discussed above. Indeed, because Fireman also uses a PVC-mesh-PVC structure for resisting tension in an inflatable product, it would only provide further motivation for a PHOSITA to use a PVC-mesh-PVC structure in lieu of PVC-only for Peterson's vertical support webs.

153. Similarly, in my opinion, the addition of Peterson would not negate or dissuade from the reasons for combining Hanlie and Fireman, discussed above. In particular, like the mesh of Hanlie's straps, Peterson does not disclose the specific structure for its vertical support webs. Accordingly, in my opinion, Peterson would only further motivate a PHOSITA to seek Fireman to combine with Hanlie in order to provide the manufacturing details for Hanlie's strap.

C. Independent Claim 1

154. In my opinion, Claim 1 of the '186 Patent would also have been obvious over Peterson in view of Hanlie and Fireman for the following reasons.

1. Element 1 preamble: "An inflatable product comprising:"

155. Peterson is directed to an inflatable product. In particular, Peterson discloses an "inflatable swimming pool." Ex. 1028, Title, Abstract, 2:15-18. Peterson discloses that "[t]he interior cavity 20 is defined by the spacing between the side walls 12, 14 when the pool 10 is inflated" and that "[i]nflation of the pool 10 is done through an air valve (not shown) formed in one of the side walls 12, 14." *Id.*, 2:15-18. Thus, in my opinion, Peterson discloses this limitation.

2. Element 1a: "a first sheet;"

156. Peterson discloses that its inflatable swimming pool has "an inner vertical side wall 12 [i.e. a first sheet]" and "an outer vertical side wall 14 [i.e. a second sheet]" Ex. 1028, 2:4-6, Fig. 4 at element 12. Figures 2 and 3 of Peterson

depict the "inner side wall 12" as one substantially continuous piece of material around the inner circumference of the inflatable pool. *Id.*, Figs. 2, 3. Peterson describes that "the swimming pool 10 is formed of polyvinylchloride (PVC) material including an inner vertical side wall 12, an outer vertical side wall 14, a plurality of interconnecting vertical support webs 16, and a floor 18, all being secured together by thermo-welding." *Id.* 2:4-8; *see also id.* at Abstract, 1:34-36. A PHOSITA would understand from these disclosures that Peterson's "inner vertical side wall 12" is a first sheet. In particular, although Peterson's "inner vertical side wall 12" is configured as a ring, it is made from a planar sheet of material, similar to the planar sheets of the '186 Patent. '186 Patent at 9:2-18; Figs. 3-4 at 10, 2. Thus, in my opinion, Peterson discloses this limitation.

3. Element 1b: "a second sheet disposed opposite the first sheet, the first and second sheets spaced apart when the product is inflated to define a gap;"

157. For the same reason that Peterson's "inner vertical side wall 12" comprises a "first sheet," Peterson's "outer vertical side wall 14" similarly comprises a "second sheet." In particular, Peterson's "outer vertical shell" is depicted as one substantially continuous planar piece of material formed into a ring around outer circumference of the inflatable pool, is made of PVC, and is connected to the other parts of the inflatable pool by thermo-welding. Ex. 1028, 2:4-6, Fig. 4 at element 14.

158. Peterson also discloses that the "inner" and "outer" "vertical side wall[s]" are "spaced apart when the product is inflated to define a gap." In particular the cross-section in Peterson's Figure 4 depicts that the "inner vertical side wall 12" and "outer vertical side wall 14" are disposed opposite from each other and spaced apart across the "interior cavity 20" of the inflatable pool by the support web 16. Ex. 1028, Fig. 4, 2:8-16. Moreover, Peterson describes that "[t]he interior cavity 20 is defined by the **spacing between the side walls 12, 14** when the pool 10 **is inflated**." *Id.* at 2:15-16 (emphasis added). Thus, Peterson discloses "a second sheet [i.e. outer vertical side wall 14] disposed opposite the first sheet [i.e. inner vertical side wall 12], the first and second sheets spaced apart when the product is inflated."

159. Thus, in my opinion, Peterson discloses this limitation.

4. Element 1c: "a tensioning structure spanning the gap between the first sheet and the second sheet"

160. In my opinion, a PHOSTIA would understand that each of Peterson's "vertical support web[s] 16" is a "tensioning structure." As discussed above, and admitted in the '186 Patent itself (Ex. 1001, 1:45-54), the use of tensioning structures to maintain the shape of inflatable products was well-known in the prior art. Consistent with that, Peterson describes the purpose of its support web as "connecting the inner and outer vertical side walls of the pool," and "provid[ing] increased strength to the inflated pool 10 so that water of greater depths can be

supported within the pool 10 before the side walls 12, 14 deform." Ex. 1028, 1:31-35, 2:25-30. A PHOSITA would understand from these descriptions and the depiction of the webs in Figures 2 and 4 that Peterson's "vertical support webs" are tensioning structures. In particular, as shown in Peterson's Figure 4, Peterson's vertical support webs connect the inner and outer wall, allowing the wall to maintain a largely vertical cross-sectional orientation, rather than deforming into a circular cross section. *Id.*, Fig. 4, 2:25-29. Moreover, Peterson's description of using thin PVC pieces connected by thermo-welding as the supporting web (Ex. 1028, 2:4-8, Figs. 2, 4) would be particularly suitable for resisting tensile forces, but would be particularly unsuitable for resisting compressive forces (i.e. under compression, the web would simply slack and fold on itself).

161. Peterson also discloses that its vertical support webs span the gap between the first sheet [i.e. inner vertical support wall] and the second sheet [outer vertical support wall]. Moreover, Peterson describes and depicts its "vertical support web" as spanning the gap between the inner and outer vertical side walls of Peterson's pool. In particular, Peterson describes that "[t]he interior cavity 20 is defined by the **spacing between the side walls 12, 14** when the pool 10 **is inflated**." Ex. 1028, 2:15-16 (emphasis added). Also, Peterson depicts and describes the "vertical support webs" as "extend[ing]" "between the inner and outer side walls 12,

14," i.e. the webs span the spacing or gap between the walls. *Id.*, 1:31-35, 2:11-16, Fig. 4.

162. Thus, in my opinion, Peterson discloses this limitation.

5. Element 1d: "the tensioning structure comprising: a plurality of strands uniformly spaced apart and arranged substantially parallel to one another"

163. As I discuss above, Peterson's "vertical support webs" are tensioning structures, but Peterson describes the webs as being composed of "PVC" material. However, Hanlie describes a problem with tensioning members comprised solely of a single layer of PVC, such as in Peterson: "[s]traps with only one layer of PVC . . . are very difficult to be sewed to or fused to the surface of the mattress, so the joining is not strong, which makes it prone to break off." Ex. 1011, 13. As discussed above in connection with Claim 1 in ground 1, Hanlie discloses improved straps which serve a similar purpose as Peterson's webs, i.e. to span and connect two spaced layers of PVC sheets of an inflatable product and to resist tension. Ex. 1011, Abstract, 11. In Hanlie's improved strap, "[t]he straps' two outer layers are made of PVC film, while the inner layer is made of chemical fiber, nylon or cotton mesh in between." *Id.*, 11, Abstract.

164. Accordingly, as discussed in detail above, a PHOSITA would be motivated by Hanlie's disclosure regarding the problems of using a single layer of PVC material as a tensioning structure for an inflatable product to use Hanlie's PVC-

mesh-PVC material as the material for Peterson's webs. Using Hanlie's PVC-mesh-PVC material for Peterson's straps would be applying a known technique [i.e. Hanlie's PVC-mesh-PVC tensioning structures] to a known product [i.e. the webs of Peterson's inflatable pool] to yield predictable results.

165. Also, as discussed above, although Hanlie discloses the use of "mesh" as the inner layer of its straps, Hanlie does not disclose specifically the structure of its mesh. However, as discussed in detail above, because a square mesh is a well-known mesh configuration a PHOSITA looking to implement Hanlie would have known to look to references, such as Fireman, which provide details regarding the structure and manufacture of a square grid mesh in an tension-resisting PVC-mesh-PVC component of an inflatable structure. Ex. 1012, Figs. 5a, 5b, ¶¶ 5, 19.

166. In my opinion, using the conventional square grid mesh structure described in Fireman as the structure for the mesh layer of Hanlie's PVC-mesh-PVC material, to in turn, replace the vertical support webs of Peterson, would have merely been combining known elements to yield predictable results.

167. The above described combination of Peterson, Hanlie, and Fireman would satisfy this limitation. In particular, it would render obvious a "tensioning structure [i.e. Peterson's web] comprising: a plurality of strands [i.e. the mesh layer of Hanlie's strap] uniformly spaced apart and arranged substantially parallel to one another [i.e. in the square grid configuration of Fireman]." As discussed above in

Ground 1, the term "mesh" in Hanlie connotes a structure made of strands with holes. Ex. 1001, Abstract, 12 (cl. 1), 13-15. As discussed above in Ground 1, because squares have four equal sides, parallel opposite sides, and perpendicular adjacent sides, the members of Fireman's square grid mesh are strands which are "uniformly spaced apart and arranged substantially parallel to one another." Ex. 1012, Fig. 5A, 5B, ¶19.

168. Accordingly, in my opinion, Peterson in view of Hanlie and Fireman renders this limitation obvious.

6. Element 1e: "a first weld sheet having the plurality of strands uniformly affixed to a surface of the first weld sheet; and"

169. As discussed above, it would be obvious to substitute Hanlie's PVC-mesh-PVC strap structure for Peterson's web. Hanlie discloses that its strap (i.e. the claimed tensioning structure) comprises two layers of PVC film (i.e. a first weld sheet and a second weld sheet) on either side of the mesh: "The straps' two outer layers are made of PVC film, while the inner layer is made of chemical fiber, nylon or cotton mesh in between." Ex. 1011, 13. Moreover, Hanlie disclosed that the PVC is uniformly affixed to the mesh: "the straps' two outer layers of the mesh **covered by PVC fabric is fused** or sewed **to the inner layer** [of mesh]." Ex. 1011, 12 (emphasis added). As noted above, Hanlie's use of "fusing" (i.e. thermoplastic

welding) is consistent with the '186 Patent's use of "welding" to describe making the PVC-mesh-PVC structure by lamination with hot rollers. Ex. 1001, 15:21-42.

170. Additionally, as discussed in detail above, Fireman's "hot lamination" process also discloses the "plurality of strands uniformly affixed to a surface of the first weld sheet." *See* Ex. 1012, ¶21. In particular, Figures 5A and 5B of Fireman depict the PVC layers as uniformly affixed to Fireman's mesh layer, and the depiction of Fireman's PVC-mesh-PVC structure as having uniform thickness demonstrates that Fireman's hot roller process is uniform manufacturing process with uniformly spaced rollers and thus would uniformly affix the PVC and mesh layers of Fireman as claimed. *Id.*, Figs. 5A, 5B, ¶2. As I discuss above, it would be obvious to use Fireman's hot lamination method to manufacture the PVC-mesh-PVC strap material of Hanlie, which in turn would be obvious to use as the material for Peterson's vertical support webs.

171. Thus, in my opinion, the combination of Peterson in view of Hanlie and Fireman renders this limitation obvious.

7. Element 1f: "a second weld sheet disposed opposite the first weld sheet, the plurality of strands captured between the first and second weld sheets when the first and second weld sheets are welded to one another."

172. As discussed above in Ground 1, both Hanlie and Fireman disclose "a second sheet disposed opposite the first weld sheet," because they both disclose

layered PVC-mesh-PVC structures. Ex. 1011, 12 (cl. 2), 13, 15, Figs. 2, 5; Ex. 1012, ¶19, Figs. 5A, 5B.

173. As discussed above in Ground 1, Hanlie discloses "the plurality of strands captured between the first and second weld sheets when the first and second weld sheets are welded to one another." In particular, Hanlie discloses that "[t]he straps' two outer layers are made of PVC film [i.e. a first and second weld sheet], while the inner layer is made of chemical fiber, nylon or cotton mesh in between [i.e. a plurality of strands captured between them]." Ex. 1011, 13. As I explain above, fusing in this context refers to thermoplastic welding, and therefore satisfies the "welding" limitation, and demonstrating that both of the PVC layers of Hanlie's strap are "weld sheets." Moreover, because such thermoplastic welding would cause the PVC film to deform and contact each other in the holes of Hanlie's mesh, a PHOSITA would recognize that PVC film layers of Hanlie's PVC-mesh-PVC straps are not only welded to the mesh layer, but are also welded to each other in the holes between the mesh, thereby capturing the strands of the mesh.

174. Also, as discussed in Ground 1, Fireman's hot lamination process expressly discloses this limitation, stating that the result of the process is that "[t]he three layers are then compressed together in the rollers or other compression means so that the **each PVC layer bonds** to the mesh and **to the other PVC layer in the interstices of the mesh**." Ex. 1012, ¶ 21 (emphasis added).

175. Thus, in my opinion, the combination of Peterson in view of Hanlie and Fireman renders this limitation obvious.

D. Dependent Claim 6

176. Claim 6 depends from Claim 1 and further recites "wherein the plurality of strands comprise a plurality of twisted filaments." In my opinion, for the following reasons, the combination of Peterson, Hanlie, and Fireman as described above in Ground 4, Claim 1 renders obvious the limitation added by Claim 6.

177. As discussed in Ground 4, Claim 1, it would be obvious to use Fireman's mesh to implement the mesh layer in Hanlie's PVC-mesh-PVC material, which would in turn be obvious to use as the material for Peterson's vertical support webs. As explained in further detail above in Ground 1, Claim 6, Fireman discloses that its mesh satisfies the limitation added by Claim 6. In particular, Fireman teaches that its mesh may be composed of "a monofilament mesh, or constructed of bundled threads woven into mesh form, and may be constructed of polyester, polypropylene, or other polymer, as well as cotton fiber, or other natural or synthetic materials." Ex. 1012, ¶19. Fireman further discloses that "[i]n an exemplary embodiment, the mesh layer is constructed of fine polyester fibers bundled into threads approximately 1 mm in thickness." *Id.*

178. As explained in further detail in Ground 1, Claim 6, in my opinion, a PHOSITA would recognize that Fireman's use of the word "thread," in that context,

means "a group of filaments twisted together, or a filamentous length formed by spinning and twisting short textile fibers into a continuous strand" Ex. 1027 [Merriam Webster Collegiate Dictionary, 10th ed. (1997)], 1228. Thus, the bundled threads of the vertical components of Fireman's mesh disclose a "plurality of strands comprise a plurality of twisted filaments."

179. Thus, in my opinion, the combination of Peterson, Hanlie, and Fireman renders this claim obvious.

E. Dependent Claim 7

180. Claim 7 depends from Claim 1 and further recites "wherein the tensioning structure is welded to the first sheet and the second sheet such that the tensioning structure spans the gap between the first sheet and the second sheet." In my opinion, for the following reasons, the combination of Hanlie and Fireman as described above in Claim 1 renders obvious the limitation added by Claim 7.

181. As discussed in further detail in Ground 4, Claim 1, element 1c, as to the limitation "the tensioning structure spans the gap between the first sheet and the second sheet," is expressly disclosed in Peterson. In particular, Peterson's Figure 4, depicts the vertical support webs connecting and spanning the gap between the pool's inner and outer wall. Ex. 1028, Fig. 4, 2:25-29. Also, Peterson depicts and describes the "vertical support webs" as "extend[ing]" "between the inner and outer

side walls 12, 14," i.e. the webs span the gap between the walls. *Id.*, 1:31-35, 2:11-16.

182. Thus, in my opinion, the combination of Peterson, Hanlie, and Fireman renders this claim obvious.

F. Dependent Claim 9

183. Claim 9 depends from Claim 1 and further recites "wherein the inflatable product is a swimming pool." In my opinion, for the following reasons, the combination of Peterson, Hanlie, and Fireman as described above in Ground 4, Claim 1 renders obvious the limitation added by Claim 9.

184. In particular, as noted in Ground 4, element 1 preamble, Peterson is directed to an "inflatable swimming pool." Ex. 1028, Title, Abstract, 2:15-18.

185. Thus, in my opinion, the combination of Peterson in view of Hanlie and Fireman renders this claim obvious.

G. Independent Claim 10

186. In my opinion, Claim 10 of the '186 Patent would have been obvious over Peterson, Hanlie, and Fireman for the following reasons.

1. Element 10 preamble: "An inflatable product comprising:"

187. As explained in further detail above in Ground 4, Claim 1, element 1 preamble, Peterson is expressly directed to an "inflatable swimming pool." which is

a type of inflatable product. Ex. 1028, Title, Abstract, 2:15-18. Thus, in my opinion, Peterson discloses this limitation.

2. Element 10a: "a first sheet;"

188. As explained in further detail above in Ground 4, Claim 1, element 1a, Peterson discloses that its inflatable swimming pool has "an inner vertical side wall 12 [i.e. a first sheet]" and "an outer vertical side wall 14 [i.e. a second sheet]" Ex. 1028, 2:4-6, Fig. 4 at element 12. Thus, in my opinion, Peterson discloses this limitation.

3. Element 10b: "a second sheet disposed opposite the first sheet, the first and second sheets spaced apart when the product is inflated to define a gap;"

189. As explained in further detail above in Ground 4, Claim 1, element 1b, Peterson satisfies this limitation. In particular, Peterson discloses that its inflatable swimming pool has "an inner vertical side wall 12 [i.e. a first sheet]" and "an outer vertical side wall 14 [i.e. a second sheet]." Ex. 1028, 2:4-6, Fig. 4 at element 12. Moreover, Peterson's Figure 4 depict its "inner vertical wall" and "outer vertical wall" as spaced apart when the product is inflated to define a gap." *Id.*, Fig. 4, 2:15-29. Thus, in my opinion, Peterson discloses this limitation.

4. Element 10c: "a tensioning structure spanning the gap between the first sheet and the second sheet"

190. As explained in further detail above in Ground 4, Claim 1, element 1c, Peterson satisfies this limitation. In particular, a PHOSITA would understand that Peterson's vertical support webs are the claimed tensioning structures because they "connect[] the inner and outer vertical side walls of the pool," and "provide increased strength to the inflated pool 10 so that water of greater depths can be supported within the pool 10 before the side walls 12, 14 deform." Ex. 1028, 1:31-35, 2:25-30. Similar to the tensioning structures of the '186 Patent, Peterson's vertical support webs connect the inner and outer wall, allowing the wall to maintain a largely vertical cross-sectional orientation, rather than deforming into a circular cross section upon inflation and use of the inflatable product. *Id.*, Fig. 4, 2:25-29; Ex. 1001, Fig. 1, 8:56-58. Thus, in my opinion, Peterson discloses this limitation.

5. Element 10d: "the tensioning structure comprising a plurality of twisted filaments uniformly spaced apart and arranged substantially parallel to one another; and;"

191. As explained in further detail above in Ground 4, Claim 1, element 1d and Ground 4, Claim 6, the combination of Peterson, Hanlie, and Fireman renders this limitation obvious. In particular, as discussed above in Ground 4, Claim 1, element 1e, Fireman discloses a mesh with a plurality of strands in a square grid pattern, and thus the vertical members of Fireman's mesh are "uniformly spaced apart" and "substantially parallel to one another." Ex. 1012, Figs. 5A, 5B, ¶ 19. As discussed above in Ground 4, Claim 6 and Ground 1, Claim 6 Fireman discloses that

its "mesh layer is constructed of fine polyester fibers bundled into threads," which a PHOSITA would understand as disclosing "twisted filaments." Thus, in my opinion, the combination of Peterson, Hanlie and Fireman renders this limitation obvious.

6. Element 10e: "a first weld sheet having the plurality of strands uniformly affixed to a surface of the first weld sheet; and;"

192. As explained in further detail above in Ground 4, Claim 1, element 1e, the combination of Peterson, Hanlie and Fireman satisfies this limitation. As discussed, in the combination of Peterson, Hanlie, and Fireman, the material of Peterson's vertical support webs would be substituted by Hanlie's PVC-mesh-PVC material, manufactured using Fireman's hot roller lamination, and with the mesh implemented by Fireman's square-grid mesh. Hanlie discloses that its "straps" are made by "fusing," which a PHOSITA would understand in context, and in light of Figures 2 and 5 of Hanlie, result in the mesh of Hanlie's strap being uniformly affixed to each of the PVC film layers. Ex. 1011, 12 (cl. 2), 15. Moreover, as discussed above, the roller-based "hot lamination" Fireman discloses for making its three-layer flexible wall structure also results in uniformly affixing the strands of its mesh to the weld sheets, in the same manner as the hot roller method disclosed by the '186 Patent. Ex. 1012, ¶21, Figs. 5A, 5B; Ex. 1001, 17:47-50. Thus, in my opinion, the combination of Peterson, Hanlie, and Fireman renders this combination obvious.

7. Element 10f: "a second weld sheet disposed opposite the first weld sheet, the plurality of twisted filaments captured between the first and second weld sheets when the first and second weld sheets are welded to one another."

193. As explained in further detail above in Ground 4, Claim 1, element 1f, the combination of Peterson, Hanlie, and Fireman discloses this limitation. As discussed above, Fireman's roller-based "hot lamination" process discloses that "[t]he three layers are then compressed together in the rollers or other compression means so that the **each PVC layer bonds** to the mesh and **to the other PVC layer in the interstices of the mesh**." Ex. 1012, ¶ 21 (emphasis added). Also, as noted in Claim 6 and above in Ground 4, Claim 10, element 10e, Fireman's mesh is composed of twisted filaments. Thus, in my opinion, the combination of Peterson, Hanlie, and Fireman renders this combination obvious.

I understand and have been warned that willful false statements and the like are punishable by fine or imprisonment, or both (18 U.S.C. § 1001). I declare that all statements made herein of my own knowledge are true and that all statements made on information and belief are believed to be true, and further, that these statements were made with the knowledge that willful false statements and the like so made are punishable by fine or imprisonment, or both, under § 1001 of title 18 of the United States Code.

I declare under penalty of perjury under the laws of the United States of America that the foregoing is true and correct. Executed on July 31, 2020.

John Abraham

John P. Abraham, PH.D

4846-8245-7542 v1 [81610-932]