IN THE UNITED STATES PATENT AND TRADEMARK OFFICE

BEFORE THE PATENT TRIAL AND APPEAL BOARD

INTEX RECREATION CORP., BESTWAY (USA) INC.,
WALMART INC., WAL-MART STORES TEXAS, LLC, WAL-MART.COM
USA LLC, and SAM'S WEST, INC. *d/b/a* SAM'S CLUB
Petitioners

v.

TEAM WORLDWIDE CORPORATION
Patent Owner

Patent No. 7,246,394
Filing Date: Jan. 7, 2006
Issue Date: Jul. 24, 2007
Title: INFLATABLE PRODUCT WITH BUILT-IN
HOUSING AND SWITCH PIPE

EXPERT DECLARATION OF JOSEPH J. BEAMAN, JR.

TABLE OF CONTENTS

I. Introduction and Summary of Opinion 5
II. Materials Reviewed 9
III. Legal standards 10
- **A.** Claim Construction 10
- **B.** 35 USC § 103 – Obviousness 11
- **C.** Level of Ordinary Skill in the Art 15

IV. Challenged Claims of the ’394 Patent 16
V. The ’394 Patent Background 17
- **A.** Overview 17
- **B.** Prosecution History 19
  - (1) June 5, 2006 – First Office Action and Response 20
  - (2) August 4, 2006 – Second Office Action and Response 20
  - (3) Notice of Allowance 24

VI. The State of the Art 24
- **A.** Overview 25
  - **1.** Inflatable Products and Pumps in the 19th Century 25
  - **2.** Inflatable Products and Pumps in the 20th Century 27
- **B.** Design Analysis for Inflatable Products with Pumps 48
- **C.** The ’394 Patent 51
- **D.** The Asserted Prior Art 51
  - **1.** Wu 52
  - **2.** Chaffee 72
  - **3.** Goldsmith 77
  - **4.** Parienti 81

VII. Claim Construction 83
- **A.** “inflatable body” 83
  - **1.** The ’394 Patent Claims 84
  - **2.** The ’394 Patent Specification 84
  - **3.** The ’394 Patent Prosecution History 86
  - **4.** The Relevant Extrinsic Evidence 88
  - **5.** Other Considerations 89
- **B.** “fan” 90
  - **1.** The ’394 Patent Claims 90
  - **2.** The ’394 Patent Specification 91
  - **3.** Extrinsic Evidence 93
- **C.** “pipe” 94
  - **1.** The ’394 Patent Claims 94
  - **2.** The ’394 Patent Specification 94

3. The Relevant Extrinsic Evidence 95

VIII. Identification of the Challenges 96

A. Ground 1 96

1. Claim 1 98

2. Claim 2. 136

3. Claim 3. 136

4. Claim 4. 137

5. Claim 5. 139

6. Claim 6. 140

7. Claim 7. 141

8. Claim 8. 144

9. Claim 9. 147

10. Claim 10. 150

11. Claim 11. 153

12. Claim 12. 155

13. Claim 16 155

14. Claim 17 158

15. Claim 18 158

16. Claim 19 159

17. Claim 20 160

18. Claim 21 161

19. Claim 22 161

20. Claim 23 162

B. Ground 2 163

1. Ground 2 is not redundant of Ground 1 165

2. Claim 1 166

3. Claim 2 / Claim 3 174

4. Claims 4-11 176

5. Claim 12 176

6. Claim 16 176

7. Claims 17-23 177

C. Ground 3 177

1. Ground 3 is not redundant of Grounds 1 or 2 179

2. Claim 1 179

3. Claim 2 / Claim 3 188

4. Claims 4-11 189

5. Claim 12. 190

6. Claim 16 190

7. Claims 17-23 191

D. Ground 4 191

1. Ground 4 is not redundant of Grounds 1-3 191
2. Challenged Claims 192
IX. Conclusion 193

I. INTRODUCTION AND SUMMARY OF OPINION

1. I have been retained by Intex Recreation Corp., Bestway (USA) Inc., Walmart Inc., Wal-Mart Stores Texas, LLC, Wal-Mart.com USA LLC, and Sam's West, Inc. *d/b/a* Sam's Club ("Petitioners") to provide analysis and expert opinions on various topics, including: (1) an overview of the technology related to U.S. Patent No. 7,246,394 ("the '394 Patent") (Ex. 1001), the challenged patent in this proceeding; (2) the level of ordinary skill in the art; and (3) the patentability of claims 1-12 and 16-23 (the "Challenged Claims") of the '394 Patent. In particular, for the purposes of this declaration, I have been asked to provide an analysis of the scope and content of the '394 Patent relative to the prior art at the time of the '394 Patent's June 22, 2001 priority date (the "Priority Date"), and to provide my opinions from the perspective of a person having ordinary skill in this art (which I will refer to as a "POSA").[1]

---

[1] Based on the information that I have been provided, it is my understanding that the Priority Date and the invention date of the '394 Patent are one-and-the-same, and I do not possess or know of information that would contradict this understanding. *See, e.g.*, Ex. 1004, pp 6-20 (TWW's Disclosure of Asserted Claims and Infringement Contentions dated July 21, 2017, indicating the Priority Date of the '394 Patent is "at least as early as 6/22/2001.").

2. I understand that Petitioners are currently parties or intervening parties in a pending lawsuit filed by Team Worldwide Corporation ("TWW" or "Patent Owner") against Walmart Inc. et al.: Case No: 2:17-CV-0235 ("the Litigation"). At various points throughout this declaration, I will refer to materials from the Litigation.

3. This declaration summarizes the opinions that I have formed to date, and it is based on personal knowledge, skill, experience, and review of materials read and considered in connection with this opinion. I may modify my opinions if necessary, based on further review and analysis of information provided to me at a later date. If asked to give my sworn testimony in a deposition regarding the contents of this declaration I will do so.

4. Based on the level of ordinary skill in the art, which I describe in more detail below, it is my opinion that the Challenged Claims of the '394 Patent are unpatentable based on at least the following four separate grounds:

Ground	Challenged Claims	Statutory Basis	Reference(s)
1	Challenged Claims	§ 103	U.S. Patent No. 6,698,046 to Wu ("Wu") (Ex. 1005) in combination with U.S. Patent No. 7,039,972 to Chaffee ("Chaffee") (Ex. 1006)
2	Challenged Claims	§ 103	Wu in combination with U.S. Patent No. 2,493,067 to Goldsmith ("Goldsmith") (Ex. 1007)
3	Challenged Claims	§ 103	Wu in combination with U.S. Patent No. 6,018,960 to Parienti ("Parienti") (Ex. 1008)

4	Challenged Claims	§ 103	Wu in combination with Goldsmith in further combination with Chaffee

5. I reserve the right to supplement this declaration as permitted to address any issues raised by expert(s) engaged by Patent Owner or resulting from further discovery. Additionally, I reserve my right to supplement this section if new information that would affect the Priority Date, becomes available to me.

Background, Education, Experience, and Compensation

6. I received my Bachelor of Science in Mechanical Engineering with high honors from the University of Texas at Austin in 1972. I received my Master of Science degree in Mechanical Engineering from The University of Texas at Austin in 1975. I received my Sc.D. in Mechanical Engineering from the Massachusetts Institute of Technology (MIT) in 1979.

7. I am currently the Earnest F. Gloyna Regents Chair in Engineering and Professor in the Department of Mechanical Engineering in the Cockrell School of Engineering at the University of Texas at Austin. I am also the former Chair of the Department of Mechanical Engineering in the Cockrell School of Engineering at the University of Texas at Austin (serving 2001–2012). I have received numerous awards for accomplishments in these roles, including being named the Distinguished Mechanical Engineer by the Mechanical Engineering and being named a member of the National Academy of Engineers in 2013. Most recently, in 2015, I was elected as a fellow of the National Academy of Inventors. I am a

Professional Engineer in the State of Texas, and I previously served on the board of directors of Society of Manufacturing Engineers.

8. My work in the classroom consists of both teaching and mentoring. I teach or have taught classes relating to the following subjects: machine elements, dynamics, fluid mechanics, design, and dynamic systems and control. I have also advised numerous design teams over the course of my teaching career. For the past 38 years, I have also overseen, supervised, and mentored mechanical engineering students in multiple senior and graduate projects.

9. In addition to my work in the classroom, I concentrate a large portion of my time on research and teaching in the mechanical engineering field, with an emphasis on advanced manufacturing techniques, especially processes involving heating and forming various materials, which includes formation of metal ingots that are used in final extrusion and forging operations. For example, I have performed research with the Special Metals Processing Consortium relating to controlling their solidification processes.

10. Also, a significant portion of my research has concerned the design and manufacture of 3-D printing machinery, having served as Chief Technology Officer of DTM Corporation, which commercialized Selective Laser Sintering (SLS). As part of my duties, I led the design of the first machine, which involved

the industrial design and aesthetics of the machine. I was one of the inventors of SLS technology and a founder of DTM.

11. Additionally, I am a named inventor on twenty U.S. patents, with the most recent having been allowed in July 2015. I have authored and co-authored numerous publications in the field of mechanical engineering, and I have worked, consulted, and testified in several patent cases. All publications I have authored within the preceding ten years and the cases in which I testified in the last four years as an expert at trial or by deposition are attached as Appendix A.

12. I am being compensated at a rate of $475.00 per hour for my work in this matter. I am also being reimbursed for reasonable and customary expenses associated with my work and testimony in this matter. My compensation and reimbursements are not contingent upon the outcome of this matter or the specifics of my testimony. I have no financial interest in the Petitioners. In addition, I have been informed that Patent Owner purports to own the ’394 Patent. I have no financial interest in Patent Owner.

II. MATERIALS REVIEWED

13. I reviewed and considered all the Exhibits and prior art references I discuss in this Declaration.

III. LEGAL STANDARDS

14. I have not been asked to offer an opinion on the law; however, as an expert assisting the Board in determining patentability in an *inter partes* review ("IPR"), I understand that I am obliged to follow existing law. I have therefore been asked to apply the following legal principles to my analysis of patentability in light of the prior art.

A. Claim Construction

15. When performing my analysis, I compared the disclosures in the prior art to the claimed invention in the '394 Patent, and in particular the Challenged Claims. I understand that, in an IPR, the Board will give the claim terms in the Challenged Claims their broadest reasonable construction or broadest reasonable interpretation ("BRI") in light of the '394 Patent itself and its prosecution history. I also understand that the Board may consider extrinsic sources of evidence in determining the broadest reasonable interpretation of claim terms. In view of these principles, I applied the broadest reasonable construction in my analysis below. Unless otherwise stated, my analysis of any claim term in the Challenged Claims is based on a POSA's understanding of the plain and ordinary meaning of that term in view of the claim language and the remaining intrinsic evidence and under the BRI standard.

B. 35 USC § 103 – Obviousness

16. I understand that §102 includes different subsections that dictate which types of information are considered prior art before the '394 Patent's (1) invention date or (2) earliest effective U.S. filing date. In particular, I understand that prior art under §102(b) consists of (1) printed publications, including patents—whether published in the United States or elsewhere in the world—that describe an invention more than a year prior to the earliest effective U.S. filing date of the invention, and (2) public use or sale of an invention in the United States more than a year prior to the earliest effective U.S. filing date of the invention. Additionally, I understand that prior art under §102(e) consists of (1) patent applications by another, published under section 35 U.S.C. § 122(b), that were filed in the United States before the invention date of a patent or (2) patents, by another, granted on applications for patents filed in the United States before the invention date of a patent.

17. I understand that a prior art reference is prior art for all that it teaches to a POSA. I further understand that, when determining whether a single item of prior art anticipates the claims, one may consider not only what is expressly disclosed in that prior art, but also what is inherently present in that prior art. I understand that claim limitations that are not expressly found in a prior art reference are inherent if the prior art necessarily functions in accordance with, or

includes, the claim limitations, or if the missing element or feature would be the natural result of following what the prior art teaches to persons of ordinary skill in the art. I also understand that it is acceptable to examine evidence outside the prior art reference, in determining whether a feature, while not expressly discussed in the reference, is necessarily present in the reference. I understand that mere probabilities that an element is present are not enough, but it is not required that persons of ordinary skill actually recognized the inherent disclosure at the time the prior art was first known or used.

18. It is my understanding that a patent claim is unpatentable as "obvious" under 35 U.S.C. § 103(a) if the differences between the subject matter sought to be patented and the prior art are such that the subject matter as a whole would have been obvious at the time the invention was made to a person of ordinary skill in the art to which said subject matter pertains. I am informed that an obviousness determination involves analysis of four factors: (1) the scope and content of the prior art; (2) the level of ordinary skill in the art; (3) the differences between the prior art and the claims at issue; and (4) objective evidence of nonobviousness. For the objective evidence of nonobvioussness, it is my understanding that there must be a nexus between the evidence and the claimed subject matter for the evidence to have any weight in determining whether the claim is invalid as obvious. As noted below, at this time, I am not aware of any objective evidence of

nonobviousness (and thus I am also not aware of any nexus linking any such evidence to the claims) for the ’394 Patent. In the event Patent Owner submits objective evidence of nonobviousness, I expressly reserve the right to respond to such evidence.

19. In addition to the factors discussed above, it is my understanding that an invention is obvious if it includes an improvement over the prior art that is no more than the predictable use of elements from the prior art according to their established functions. Design incentives and other market forces may prompt a variation of a work available in one field of endeavor, either within the same field or a different one; if a person of ordinary skill in the art can implement a predictable variation of that work, then the work likely is obvious. Moreover, if a technique has been used to improve one device, and a person of ordinary skill in the art would recognize that it would improve similar devices in the same way, the technique likely is obvious unless its actual application is beyond his or her skill.

20. Furthermore, I understand that the threshold for establishing obviousness and exercising one’s common sense is lower for simple technology. Additionally, I understand that an alleged invention is obvious if it is simply arranging known prior art elements with each performing the same function it had been known to perform in a manner that yields no more than a person of ordinary skill in the art would expect from such an arrangement.

21. To determine whether there was an apparent reason to combine known elements of the prior art in the fashion claimed in a patent, I understand that it may be necessary to examine: (i) the interrelated teachings of multiple patents; (ii) the effects of demands known to the design community or present in the marketplace; and (iii) the background knowledge possessed by a person having ordinary skill in the art. However, I also understand that precise teachings directed to the specific subject matter of the Challenged Claims(s) need not be identified because the inferences and creative steps that a person of ordinary skill in the art would employ may be taken into account.

22. I understand that obviousness may be found by virtue of a combination of prior art references in which one or more of the references contains a teaching, suggestion, or motivation to combine elements of the prior art; however, an obviousness analysis is not confined to a formula in which a teaching, suggestion, or motivation to combine items of prior art must be identified. In determining whether the subject matter of a claim is obvious, neither the particular motivation nor the avowed purpose of the patent controls; what matters is the objective reach of the claim. If a claim extends to what is obvious, it is invalid under § 103.

23. I understand that one of the ways in which a patent's subject matter can be proved obvious is by noting that there existed at the time of the invention a

known problem for which there was an obvious solution encompassed by the patent's claims. The problem motivating the patentee may be only one of many addressed by the patent's subject matter; thus, any need or problem known in the field of endeavor at the time of the invention and addressed by the patent can provide a reason for combining the elements in the manner claimed.

24. Common sense teaches that familiar items may have obvious uses beyond their primary purposes, and in many cases a person of ordinary skill will be able to fit the teachings of multiple patents together like pieces of a puzzle; indeed, a person of ordinary skill is also a person of ordinary creativity. Where there is a design need or market pressure to solve a problem and there are a finite number of identified, predictable solutions, a person of ordinary skill has good reason to pursue the known options within his or her technical grasp. If this leads to the anticipated success, it is likely not the product of innovation but of ordinary skill and common sense. In that instance, the fact that a combination was obvious to try may show that it was obvious under § 103.

C. <u>Level of Ordinary Skill in the Art</u>

25. Based on my study of the '394 Patent, the relevant technical field is inflatable products and/or fluid control devices.

26. In my opinion, a POSA as of the Priority Date would have had either:

- A bachelor's degree in mechanical engineering, or an equivalent field; or
- An associate's degree in mechanical engineering, or an equivalent field, and two years of practical experience in product design and manufacturing.

27. I apply these standards to my analysis herein.

IV. CHALLENGED CLAIMS OF THE '394 PATENT

28. Entitled "INFLATABLE PRODUCT WITH BUILT-IN HOUSING AND SWITCHING PIPE," the '394 Patent is directed to an inflatable product with an air pump assembly and air flow control.

29. The '394 Patent includes twenty-three claims, three of which are independent (claims 1, 13, and 16) and twenty of which are dependent.

30. Although I have considered all of the claims to understand the full scope of the patent, for purposes of this opinion, I have been asked to limit my invalidity analysis to claims 1-12 and 16-23 (i.e., the Challenged Claims).

31. Claim 1, below, is representative of the Challenged Claims:

Claim 1
1. An inflatable product including: an inflatable body; a fan and motor assembly for pumping air; a housing built into the inflatable body, the housing having an interior region; and an air conduit disposed at least in part in the housing, the air conduit being movable between a first position and a second position while remaining disposed at least in part in the housing, the fan and motor inflating the

inflatable body when the air conduit is in the first position, and deflating the inflatable body when the air conduit is in the second position;
wherein air flows between the interior region of the housing and the inflatable body during inflation and deflation.

V. THE '394 PATENT BACKGROUND

A. Overview

32. Although the '394 Patent discloses nine separate embodiments, I understand that Patent Owner considers the Challenged Claims to be directed to the third embodiment, which is described at Column 4, lines 13 through 39 and Figures 3A-3D of the '394 Patent. *See* Ex. 1003 ("File History") (describing the as-filed claims as "relat[ing] to the single disclosed species shown in Figures 3A-3D"), 72-79; Ex. 1001, 4:13-39, Figs. 3A-3D (third embodiment).

33. The third embodiment of the '394 Patent teaches an air pump assembly with a movable air conduit—which a POSA would have understood to be a directional control valve—for switching between an inflate mode and deflate mode without reversing the direction of the pump (a "Uni-directional Pump Assembly"). *See generally* Basic Pneumatics: a manual for fluid power components and practical applications (Ex. 1011), at 73-78.

34. Referring to Figures 3A and 3B (which show the inflate position), below, the air pump assembly includes "a housing 31, a fan and motor 33 [green], a switching pipe 32 [orange], a flap 36 [blue] and a cover 35 [red]." Ex. 1001,

4:15-16. "During inflation, the switching pipe 32 [orange] is connected to the air outlet 312 on the top surface of the housing 31." *Id.* at 4:22-24. When the cover 35 (red) is removed from the air intake 311 and the fan and motor 33 (green) are actuated, "[a]ir flows through the air intake 311 and the air outlet 313, and into the inflatable product [not shown]." *Id.*at 4:26-28.

Figure 3A	Figure 3B
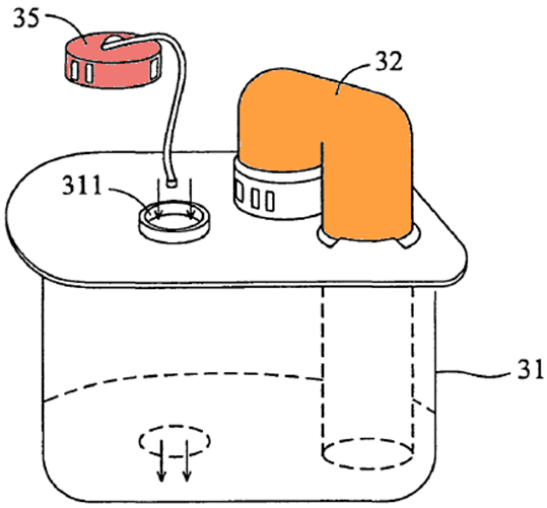 FIG. 3A	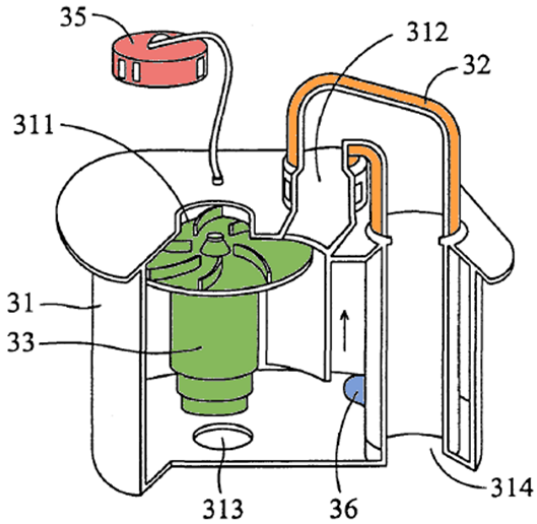 FIG. 3B

35. Referring to Figures 3C and 3D (which show the deflate position), below, to switch the air pump assembly to the deflate position, "the switching pipe 32 [orange] is switched from the air outlet 312 to the air intake 311 on the top surface of the housing 31." *Id.*at 4:29-31. Because the flap 36 (blue) "is firmly connected to the switching pipe 32 [i.e., the movable conduit]" (*id.* at 4:17-18), "the flap 36 follows the switching pipe 32 to rotate to close the air outlet 313 on the bottom surface of the housing 31" (*id.* at 4:31-33). As a result, "[a]ir flows

through the air intake 314, the switching pipe 32 and the air intake 311, and into the housing 31" and, then, "air flows out from the air outlet 312." *Id.* at 4:35-38.

Figure 3C	Figure 3D
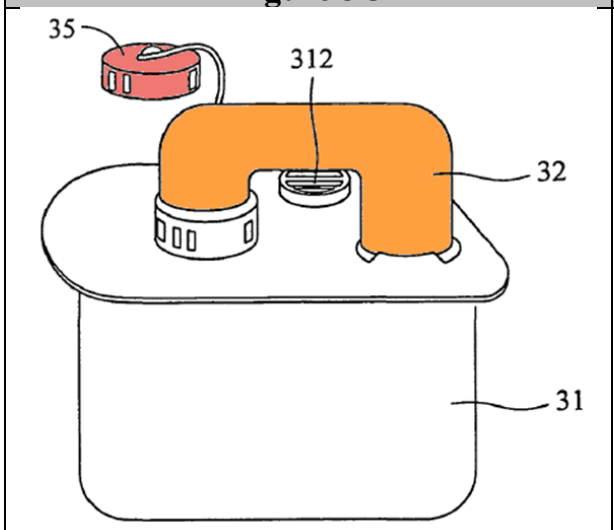 FIG. 3C	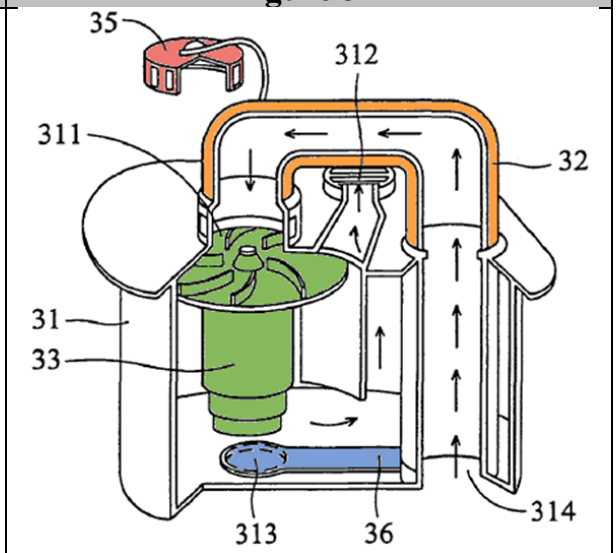 FIG. 3D

B. <u>Prosecution History</u>

36. I understand that the '394 Patent issued on July 24, 2007 from U.S. Application No. 11/326,829 (the "'829 Application"), which was filed on January 7, 2006. I also understand that the '829 Application is a division of and claims priority to U.S. Application No. 09/886,030 (the "'030 Application"), which was filed on June 22, 2001 and serves as the basis of the Priority Date.[2]

[2] In the Litigation, I understand that Patent Owner was required to submit "the priority date to which each asserted claim allegedly is entitled," and in doing

37. The Applicant originally filed fifteen (15) claims with the '829 Application. After two Office Actions, the PTO allowed those claims as 1-15, with slight modification, and eight (8) more claims, which issued as claims 16-23.

(1) *June 5, 2006 – First Office Action and Response*

38. On June 5, 2006, the Examiner issued a Restriction Requirement. Ex. 1003, 74-79. The Examiner explained that the '829 Application contained thirteen different species and requested that the Applicant elect which disclosed species were covered by the claims. *Id.* at 76-78.

39. On June 22, 2006, the Applicant responded to the Examiner's Restriction Requirement. *Id.* at 72-73. Specifically, the Applicant explained that "claims 1-15 relate to the single disclosed species shown in Figures 3A-3D of the present application." *Id.* at 72.

(2) *August 4, 2006 – Second Office Action and Response*

40. On August 4, 2006, the Examiner issued a substantive Office Action. Ex. 1003 at 60-66. In that Office Action, the Examiner acknowledged the Applicant's election (*id.* at 62) and rejected claims 1-15 on two separate grounds.

---

so, the Patent Owner claimed priority to June 22, 2001 (i.e., the Priority Date). *See* Ex. 1004, pp. 6-20.

41. First, the Examiner rejected claims 1-15 "on the grounds of nonstatutory obviousness-type double patenting . . . over claims 4-7 and 11-34 of U.S. Patent No. 7,040,347," which has the same named inventor as the '394 Patent: Cheng Chung Wang. *Id.* According to the Examiner, these claims were "not patentably distinct from each other because each require an inflatable body, a fan and motor assembly, a housing having an interior region, and a pipe/conduit movable between a first and second position." *Id.* at 62-63.

42. Second, the Examiner rejected claims 1-10 and 12 under 35 U.S.C. § 102(e) in view of U.S. Patent No. 6,332,760 (the "'760 Patent"). *Id.* at 63. The Examiner concluded that the '760 Patent disclosed every limitation of claims 1-10 and 12, including, for example, that the socket 34 shown in Figure 4 (reproduced below) of the '760 Patent constituted the claimed "housing." *Id.*

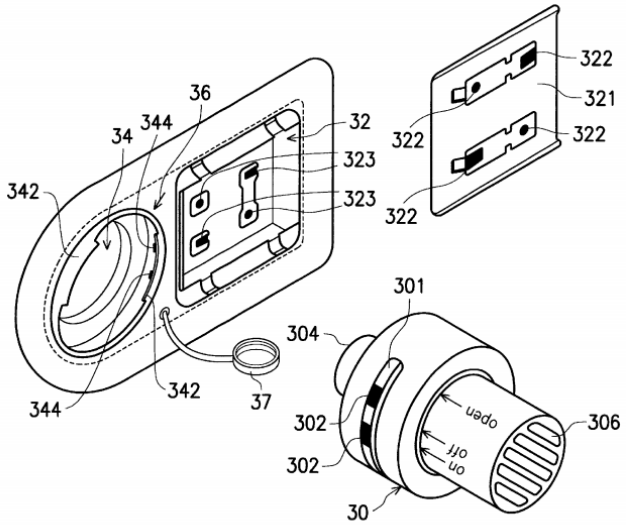

FIG. 4

43. The Examiner indicated claims 13-15 were allowable and objected to claim 11 as being dependent on claim 1 but the Examiner stated that it "would be allowable if rewritten in independent form including all of the limitations of the base claim and any intervening claims." *Id.* at 65.

44. On January 4, 2007, the Applicant responded to the Examiner's Office Action. *Id.*at 26-29. In response to the Examiner's non-statutory double-patenting rejection, the Applicant filed a terminal disclaimer, "obviating the double patenting rejection over the claims of US 7,040,347." *Id.* at 26.

45. In response to the Examiner's § 102(e) rejection in view of the '760 Patent, the Applicant clarified that the '760 Patent does not constitute prior art under § 102(e) because both the '829 Application and the '760 Patent list the same inventor. *Id.* at 27-28.

46. With its Response, the Applicant also disclosed a new non-patent prior art reference: the Insta-Bed (Ex. 1014). Ex. 1003 at 28. The Applicant conceded that the '760 Patent disclosed "a pump similar to that of the Insta-Bed" reference and, as a result, proceeded to distinguish claim 1, as amended (discussed below), from the Insta-Bed reference (shown below). *Id.*

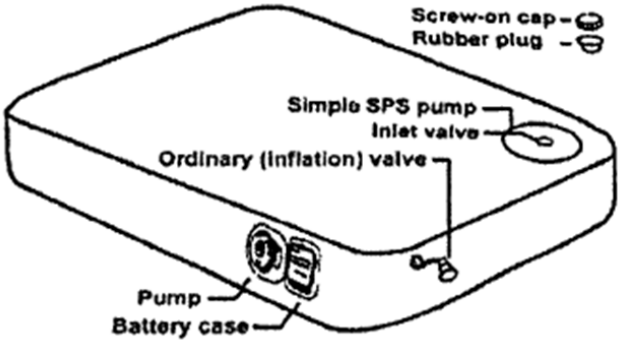

Ex. 1014, at 1.

47. The Applicant distinguished the Insta-Bed in view of amendments made to claim that required the: "air conduit is movable between a first position and a second position while remaining disposed at least in part in the housing." Ex. 1003 at 28.

48. Specifically, the Applicant explained that the Insta-Bed did not anticipate claim 1 because "the Insta-Bed pump is removed entirely from the socket when moved from a first position in which it inflates the airbed to a second position in which it deflates the airbed" (*id.* at 28), as shown in another figure of the Insta-Bed reference, below.

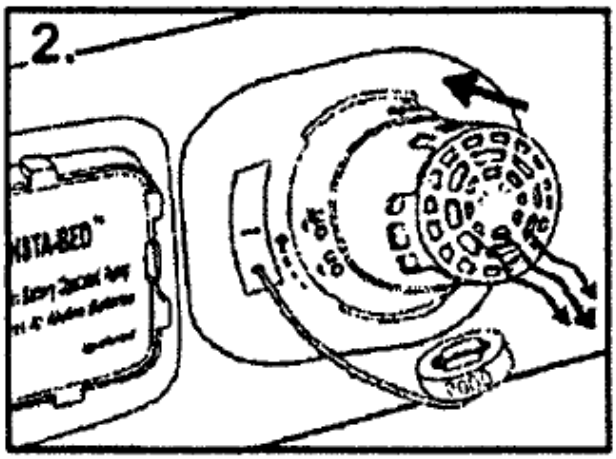

Reverse the pump by inserting the inlet side of the pump into valve. Switch to "On" position to deflate.

Ex. 1014, at 1.

49. Latching onto the allowable form of claim 11, the Applicant also added new claim 16, which incorporated "all of the limitations of claims 1 and 11 and the intervening claims 7, 8 and 10." Ex.1003 at 27. The Applicant also added claims 17-23, which depended from claim 16. *Id.*

(3) *Notice of Allowance*

50. On April 19, 2007, the Examiner issued a Notice of Allowance for claims 1-23. *Id* at 9-10.

VI. THE STATE OF THE ART

51. I understand that Patent Owner considers a key aspect of the '394 Patent to be the "built into" limitation of the Challenged Claims. Ex. 1015, at 7-9.

In the Litigation, I understand that Patent Owner described the benefits of the "built into" feature as "providing a more compact and integrated design," and facilitating the use of an electric pump to "stably inflate or deflate the air mattress without being held manually by the user." *Id.* at 8; *see also* Ex. 1001, 1:24-27. As I explain in more detail below, however, this feature was well-known in the prior art, as were the remaining elements of the Challenged Claims.

A. Overview

1. *Inflatable Products and Pumps in the 19th Century*

52. Inflatable products have been around for centuries. Many of the earliest inflatable product patents filed in the U.S. related to inflatable beds and life rafts/boats.[3]

53. Methods for inflating these products have been around for just as long. In the 1800's, two particularly prevalent methods for filling (or inflating)

[3] *See generally, e.g.,* U.S. Patent No. 10,139 to Scott (Ex. 1017); U.S. Patent No. 28,150 to Broad (Ex. 1018); U.S. Patent No. 66,706 to Hamilton (Ex. 1019); U.S. Patent No. 151,400 to Keeler (Ex. 1020); U.S. Patent No. 187,397 to Macintosh (Ex. 1021); U.S. Patent No. 277,979 to Blochman (Ex. 1022); U.S. Patent No. 388,037 to Hargin (Ex. 1023); U.S. Patent No. 486,696 to Curlin (Ex. 1024); U.S. Patent No. 585,834 to Ruth (Ex. 1025).

inflatable products included: (1) user exhalation; and (2) a bellows apparatus. Scott 139 (Ex. 1017), for example, disclosed an inflatable bed that could be "inflated with a bellows, or by the application of a person's mouth." Ex. 1017, 2:40-47.[4]

54. Early on, prior art inventors recognized the advantages of inflation methods that promoted **efficiency of time**.

55. For example, Keeler (Ex. 1020) disclosed a life boat with inflatable "bustles" and recognized that using "a hand-bellows for inflating the bustles" was more suitable than user exhalation for "[b]oats of the larger class." Ex. 1020, 2:2-4.

56. Through the end of the 19th Century, prior art inventors continued to innovate in the area of inflatable products and pumps.

57. One notable design improvement with bellows pumps was building the pump device into the inflatable product, which provided several distinct advantages—namely, increased **durability** and **user convenience**.

[4] *See also* Keeler (Ex. 1020), 1:31-2:4; Broad (Ex. 1018), 1:89-96; Hargin (Ex. 1023), 1:53-63, 2:123-3:22.

58. For example, and referring to Figure 1, below, in 1888, Hargin (Ex. 1023) disclosed an air mattress with pump F (orange) "wholly inclosed within" the air mattress. Ex. 1023, 1:53-62, 2:128-129, 3:10-18, Figs. 1-2.

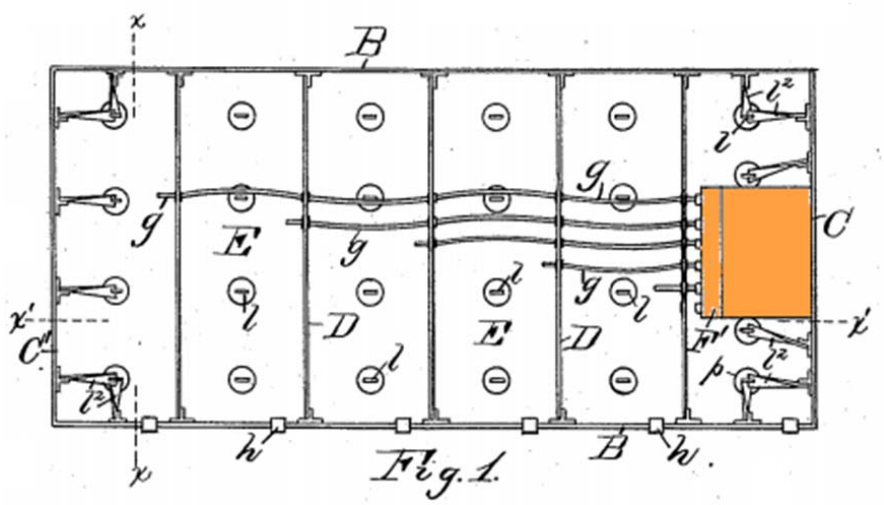

59. According to Hargin, this design promoted "strength and durability" and "provided [a] means for readily inflating [the mattress] when desired" (i.e., **user convenience**). *Id.* at 1:9-18.

60. Hargin further detailed that this design protected the pump from "accident, injury, or separation when plunged into water" (i.e., **durability**) and used as a life raft. *Id.* at 2:129-131, 3:18-22.

2. *Inflatable Products and Pumps in the 20th Century*

61. Innovation of inflatable products and pumps continued into the 20th century.

a. Pump Automation

62. Starting in the early 1900s, one of the most significant improvements in inflatable product pump design was the use of a motor to automate the operation of the pump.[5] The result was a more **efficient** inflatable product pump design, both in terms of the time to inflate the product and the labor involved in accomplishing the same. *See, e.g.,* U.S. Patent No. 1,772,310 to Hart (Ex. 1026), 1:42-55, 1:76-82, 7:49-54; *cf.* Rand 295 (Ex. 1028), 1:48-2:12.

63. With the advent of automation to the field, prior art inventors began focusing on **decreasing the size** and **weight** of automated pump designs.

64. Rand 295 disclosed a reciprocating pump design in the form of a diaphragm pump for an air mattress.[6] *See* Ex. 1028, 2:18-47, 3:12-16, Figs. 2-3.

---

[5] *See, e.g.,* U.S. Patent No. 2,437,006 to Simpson (Ex. 1027), 1:38-2:9, 3:31-47, Figs. 1, 4; U.S. Patent No. 2,690,295 to Rand (Ex. 1028), 3:12-18, Fig. 1-3; U.S. Patent No. 2,719,986 to Rand (Ex. 1029), 2:36-3:16, Fig. 7.

[6] For additional examples of reciprocating automated pump designs, see: Simpson (Ex. 1027), 1:48-2:9, 3:31-47, Figs. 1, 4; Rand 986 (Ex. 1029), 3:12-16, Fig. 7; U.S. Patent No. 4,583,255 to Mogaki (Ex. 1030), 3:67-4:29, Figs. 7-8; U.S. Patent No. 5,232,353 to Grant (Ex. 1031), Abstract, Figs. 1-3, 11; U.S. Patent No. 5,876,359 to Bock (Ex. 1032), 1:30-39.

Referring to Figure 2, below, Rand 295 describes diaphragm 28 as being "made of rubber, plastic, or any other flexible material which will have a long life during many repeated oscillations." *Id.* at 2:20-22. "A means to reciprocate the diaphragm to pump the fluid is also provided" in the form of an "eccentrically driven member or bearing 36," which is connected to motor shaft 38. *Id.* at 2:39-51. In operation, "motor shaft 38 rotates and reciprocates bearing 36," which "drives diaphragm 28 . . . to expand and contract the expansion chamber 26 of the pump." *Id.* at 3:3-8. As a result, air is pumped through the system. *Id.* at 3:9-11.

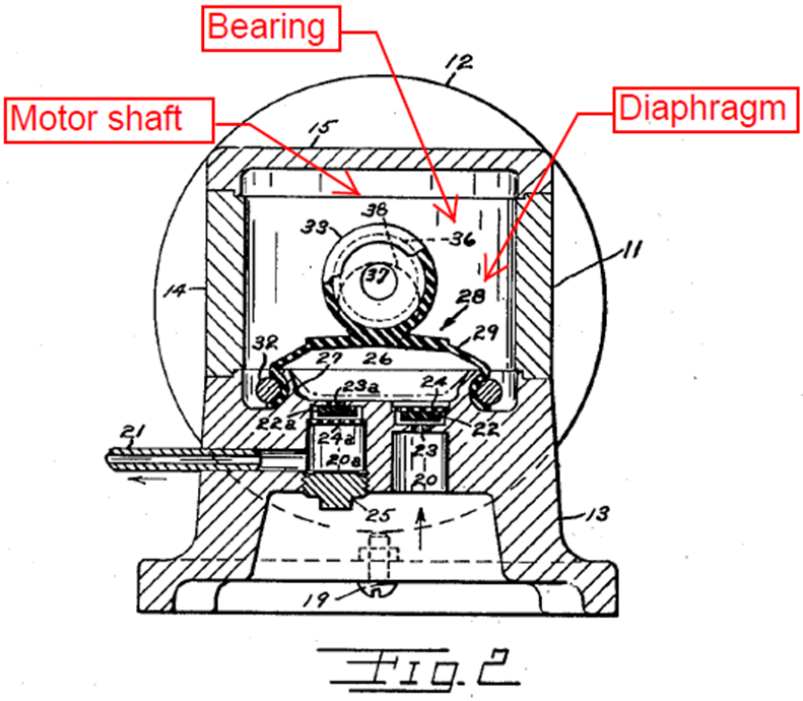

65. Eventually, however, prior art inventors recognized the size and weight drawbacks of such reciprocating pump designs. For example, Grant described conventional diaphragm pumps, like that disclosed in Rand 295, as

suffering from "ballooning." Grant (Ex. 1031), 6:29-36. As a result, such pumps or compressors required "[l]arger, more obtrusive enclosures," "more frequent replacement," "a more secure seal to the pump chamber," and "[a] larger electromagnet [] is required for efficient pump operation." *Id*.

66. As a result, prior art inventors recognized the benefits of alternative pump designs that promoted decreased size and weight.

67. Bock, for example, disclosed a rotational automated pump design in the form of a "rotary vane pump" and recognized that such pumps were "smaller and lighter," which "permits the overall controller to be of smaller size and weight for ease of transportability and installation." Bock (Ex. 1032), 1:61-65.[7]

68. Importantly, prior art inventors also recognized the various pump types to be largely interchangeable with one another.[8]

---

[7] For additional examples of rotational automated pump designs, see: U.S. Patent No. 2,493,067 to Goldsmith (Ex. 1007), 4:1-15; U.S. Patent No. 4,394,784 to Swenson (Ex. 1033), Abstract, 3:54-66; U.S. Patent No. 4,890,344 to Walker (Ex. 1010), 1:29-30; U.S. Patent No. 5,467,543 to Fink (Ex. 1034), Fig. 7a; U.S. Patent No. 7,039,972 to Chaffee (Ex. 1006), 3:59-4:10.

[8] *See, e.g.,* Simpson (Ex. 1027), 3:31-37; GB Patent No. 959,103 to Talley (Ex. 1035), 3:19-25; U.S. Patent No. 3,462,778 to Whitney (Ex. 1036), 3:28-29;

b. Inflatable Product Flow Control

69. Throughout the 20th century, prior art inventors also focused on improving the way the pumps inflate and deflate inflatable products. At this time, all automated pumps were used to power inflate the inflatable product; however, some pumps included valve mechanisms that allowed for power inflation and ***vent*** deflation (i.e., passive, non-powered deflation), while other pumps allowed for both power inflate and ***power*** deflate.

70. Swenson (Ex. 1033), for example,[9] disclosed a solenoid valve 48 for accomplishing a power inflate, vent deflate function.

71. Swenson disclosed inflating a mattress using a blower pump 38. *See* Ex. 1033, 4:68 – 5:19; *see also* ¶ 67, above. Referring to Figure 3, below, connecting the pneumatic bladder to the pump 38 were air lines 49 and 18. Swenson, 4:68-5:6. Interposed between air lines 49 and 18 was solenoid valve 48. *Id.* In the inflate mode, motor 52 was actuated and solenoid valve 48 was opened

---

Mogaki (Ex. 1030), 7:20-27; Walker (Ex. 1010), 5:44-66; Fink (Ex. 1034), 6:5-9; Bock (Ex. 1032), 3:63-67; Chaffee (Ex. 1006), 3:59-4:10.

[9] For additional examples of power inflate, vent deflate pump designs, see: Hart (Ex. 1026), 3:116-130; Mogaki (Ex. 1030), 7:35-40; U.S. Patent No. 5,103,518 to Gilroy (Ex. 1037), 10:34-54; Grant (Ex. 1031), 5:48-59.

to connect "the air flow path from air line 49 to air line 18," such that "pressurized air is directed into the air mattress section[.]" *Id.* In the deflate mode, solenoid valve 48 was opened but motor 52 was not actuated. *Id.* at 5:10-12. As a result, "air exhausts backward through air line 18, air line 49 . . . into blower 38, thereby reducing the confined air pressure in the air mattress section[.]" *Id.* at 5:12-18.

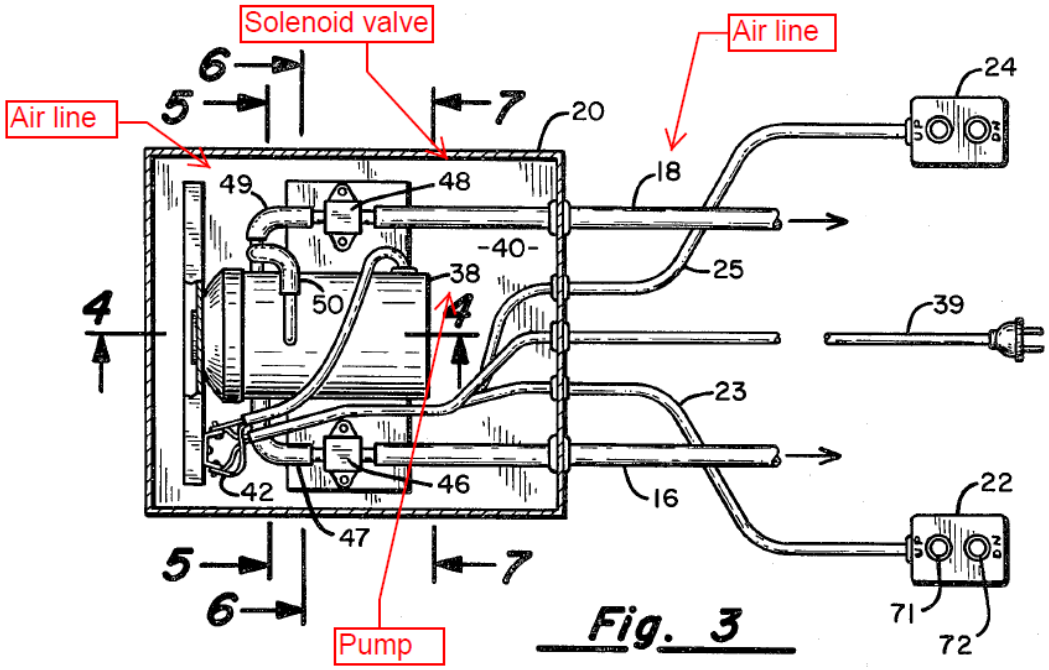

72. Other pumps, however, offered power inflate and ***power*** deflate functionality.

73. Prior art inventors recognized that this power inflate/power deflate design offered marked improvements over power inflate, vent deflate designs—including, in particular, **efficiency** of time and user effort. *See, e.g.,* U.S. Patent No. 5,529,377 to Miller (Ex. 1013), 4:27-34 ("The advantage of such a system is

that the deflation rate is quick and matches the inflation rate. Also the air cell can be fully evacuated and the seat occupant senses power operation on inflation and deflation.”).[10]

74. In general, there were two primary pump designs that offered these benefits:

i. Reversible motor pumps (a “Reversible Pump Assembly”); and

ii. Uni-directional Pump Assemblies (i.e., uni-directional motors and pumps that included a directional control valve; *see* ¶ 33).

75. U.S. Patent No. 6,018,960 to Parienti (Ex. 1008) is one example of a Reversible Pump Assembly.[11]

76. Parienti, entitled “Automatically Inflatable, Deflatable and Foldable Solar-Powered Cooler Mattress With a Sunshade,” disclosed “an inflatable mattress and an associated device for automatic inflating and deflating of the mattress.” Parienti (Ex. 1008), 1:22-24.

---

[10] *See also* U.S. Patent No. 4,938,528 to Scott (Ex. 1012), 1:21-49; U.S. Patent No. 5,947,168 to Viard (Ex. 1038), Abstract.

[11] For additional examples of Reversible Pump Assembly designs, see: U.S. Patent No. 5,152,579 to Bishai (Ex. 1039), 3:56-65; Miller (Ex. 1013), 4:27-34; Chaffee (Ex. 1006), 3:59-4:10.

77. Referring to Figure 1, below, that associated device (orange) (a Reversible Pump Assembly) included "a motor (2) driving a turbine (4)" (*id.* at 1:28-29) and "[s]witching from inflating to [the] deflating function is performed by reversing the polarity of the motor (2) that drives the turbine (4)" (*id.* at 2:64-66). As a result, "[i]nflating is performed through the rotation of the turbine in one direction" and "deflating is performed through the rotation of the turbine in the reverse direction." *Id.* at 2:66-3:4.

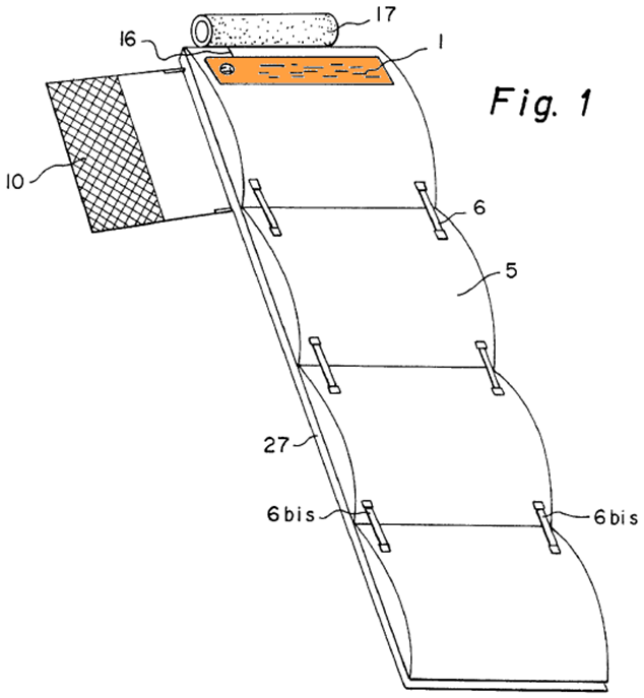

78. U.S. Patent No. 4,938,528 to Scott (Ex. 1012), by comparison, is one example of an inflatable product with a Uni-directional Pump Assembly design—the second type of power inflate, power deflate pump.[12]

79. Scott, entitled "Seat Assembly With Inflatable Bladder Having a Single Non-Reversible Pump For Inflating and Deflating the Bladder," disclosed various embodiments of a "vehicle seat assembly having an inflatable bladder in the seat to provide adjustable support for the seat occupant[.]" Scott (Ex. 1012), 1:10-12. The adjustability of the seat support was accomplished through the use of an "improved air delivery system for inflating and deflating the seat bladder having a single, non-reversible pump for both inflating and deflating the bladder" (i.e., a Uni-directional Pump Assembly). *Id.* at 1:13-15.

---

[12] For additional examples of Uni-directional Pump Assemblies, see: German Pub. Pat. App. 1 909 938 to de Vries (Ex. 1040), at 15; U.S. Patent No. 3,485,240 to Fountain (Ex. 1041), 2:3-16; Walker (Ex. 1010), 12:22-38; U.S. Patent No. 5,235,713 to Guthrie (Ex. 1042), 11:5-63; Viard (Ex. 1038), 7:20-8:4; U.S. Patent No. 6,447,361 to Akiyama (Ex. 1043), 7:7-55; U.S. Patent No. 6,698,046 to Wu (Ex. 1005), 5:9-6:48; Wu '925 Application (Ex. 1066), 7:29-9:14

80. In one embodiment (shown in Figure 12, below), Scott taught the use of "a single, two position, four way valve 68" (a directional control valve) to accomplish the power inflate, power deflate functionality. *Id.* at 5:49-50.

81. Referring to the first annotated version of Figure 12, below, in a first position (outlined in blue), valve 68 connects pump inlet 34 with atmosphere and pump outlet 32 with bladder 22 such that bladder 22 is inflated. *Id.* at 5:50-61. Referring to the second annotated version of Figure 12, below—which, to be clear, I have modified to more clearly show the disclosed and described second position of valve 68—when valve 68 is moved to its second position (outlined in green), "pump inlet 34 is now in communication with the bladder 22" and "pump outlet 32 is in communication through the valve 68 to atmosphere." *Id.* at 5:62-66. As a result, upon activation when valve 68 is in this second position, pump deflates bladder 22. *Id.*

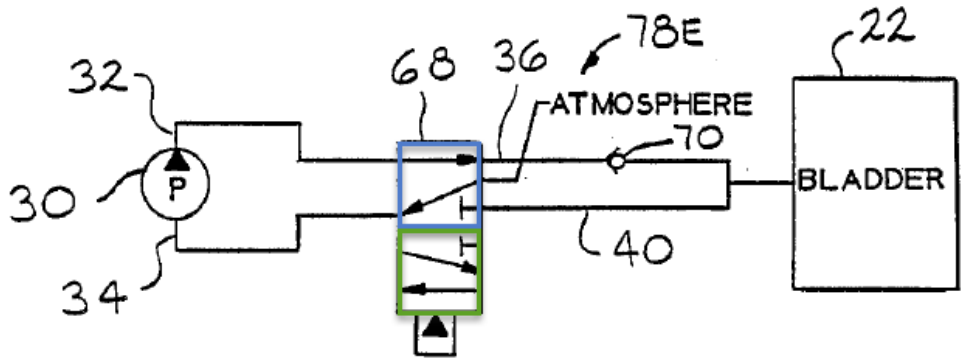

FIG. 12

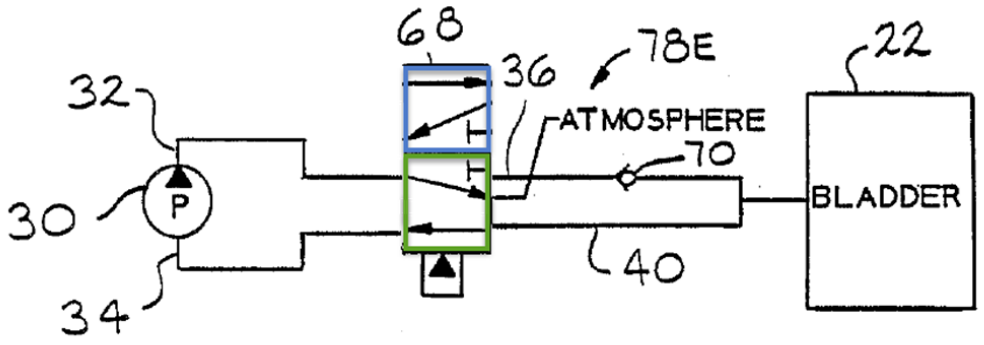

FIG. 12

82. Although Scott only depicted the directional control valve 68 in schematic form (in Figure 12, above), prior art inventors knew that directional control valves could take limited forms.

83. Basic Pneumatics, for example, taught that the "two principal" forms of directional control valves were: (1) poppet valves; and (2) sliding valves. *See* Basic Pneumatics (Ex. 1011), 74. Referring to Figure 7.3, below, Basic Pneumatics further disclosed that there were three basic variations of sliding valves: (1) spool valves; (2) rotary valves; and (3) plane slide valves. *Id.* Each of these sliding valves accomplished the same basic function: "us[ing] a sliding action to open and close ports." *Id.* at 76.

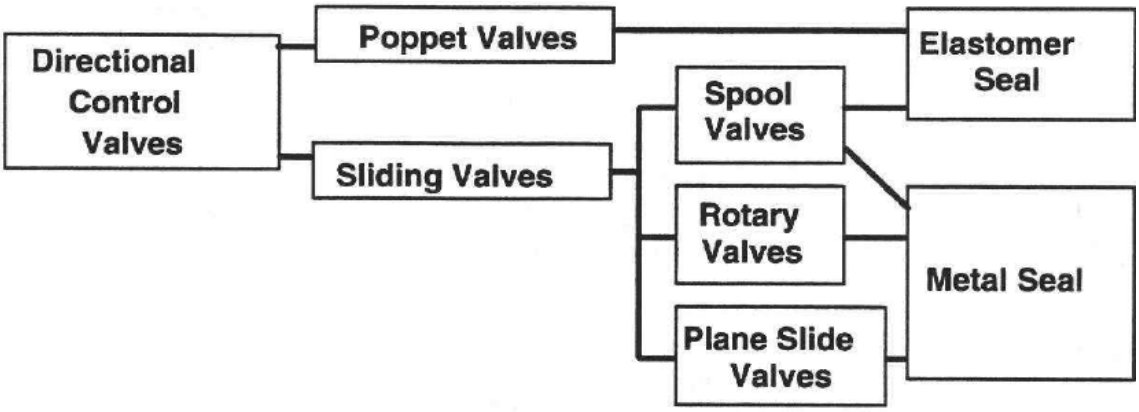

Fig. 7.3 The various types of valves and sealing methods

84. A rotary valve, for example, relied on the sliding action of a ***rotatable*** disc (orange arrow, below) to "interconnect the ports" in the device. *See* Basic Pneumatics, 78. Referring to the exemplary embodiment shown in a portion of Figure 7.12, below, the rotary valve included four ports A, B, P, and R and two primary positions (i.e., a 4/2 valve, like that disclosed in Scott, *see* ¶¶ 78-81, above). *See id.*

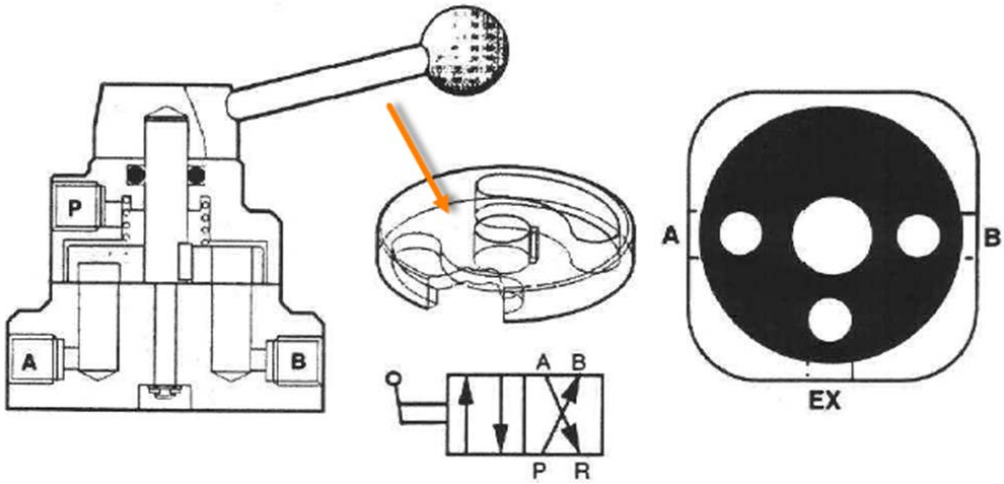

85. Referring to another portion of Figure 7.12, below, in the first position (shown at left), rotary valve (through the rotatable disc) connects port P with port

A and port B with port EX (shown above as port R). *See id.* In the second position (shown at right), the disc of the rotary valve is rotated clockwise to connect port P with port B and port A with port EX. *See id.*

First Position	Second Position
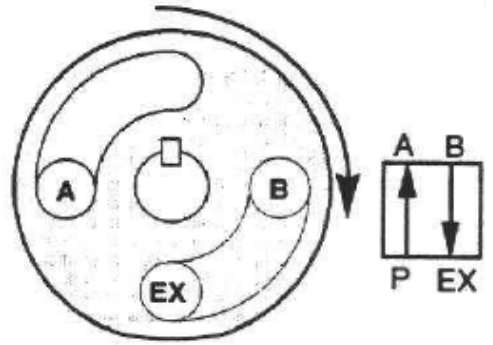	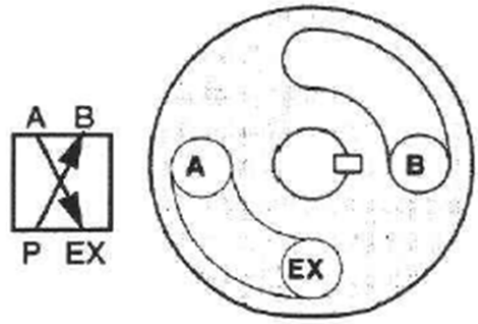

86. As applied to the inflatable product in Scott, the ports of this rotary valve would be connected as follows:

- Port B – atmosphere;
- Port EX (or R) – the pump inlet 34;
- Port P – the pump outlet 32; and
- Port A – the bladder 22.

So connected, the rotary valve would operate as Scott described—i.e., as a 4/2 directional control valve. In a first position, the rotary valve would connect pump inlet 34 (port EX/R) with atmosphere (port B) and pump outlet (port P) with bladder 22 (port A) such that bladder 22 is inflated. Scott, 5:50-61. When the rotary valve is moved to its second position, "pump inlet 34 [port EX/R] is now in communication with the bladder 22 [port A]" and "pump outlet 32 [port P] is in

communication through the valve 68 to atmosphere [port B]" to deflate bladder 22. *Id.* at 5:62-66.

87. Prior art inventors considered these two categories of power inflate, power deflate pumps—i.e., Reversible Pump Assemblies and Uni-directional Pump Assemblies—to be interchangeable with each other.[13]

88. However, prior art inventors also recognized the distinct advantages connected to Uni-directional Pump Assemblies, like that disclosed in Scott (*see* ¶¶ 78-81, above), compared to Reversible Pump Assemblies—namely, decreased **cost** and **weight**, and increased energy and spatial **efficiency**.

89. Specifically, prior art inventors appreciated that a Reversible Pump Assembly "is more expensive than a" Uni-directional Pump Assembly "and is less efficient." *See* Scott (Ex. 1012), 1:40-43. "Because [the Reversible Pump Assembly] is less efficient, a larger motor is required to produce the same amount of air pressure and volume flow" as a Uni-directional Pump Assembly. *Id.* at 1:42-45; *see also id.* 1:50-54 ("It is an advantage of the present invention that the air

[13] *See, e.g.,* Guthrie (Ex. 1042), 11:59-63 ("The function of the CPR [or directional control] valve can also be achieved using a reversible blower capable of operating in the opposite direction so that the high-pressure outlet becomes the low-pressure inlet and vice versa."); *id.* at 10:57-11:14.

delivery system cost is reduced by use of a single, one-directional pump versus two pumps or a reversible pump."); *id.* at1:54-56 ("It is a further advantage of the present invention, that the pump efficiency of a one-directional pump is greater than the efficiency of a reversible pump."); de Vries (Ex. 1040), at 15 (noting that "the interior of the pump can be maintained as simply as possible" because "reversal of the direction of rotation of the electric motor driving the pump is also not necessary").

c. Pump Layout

90. Another area of innovative focus during the 20th century was the efficient use of space in the design of inflatable products with pumps.

91. Initial automated pump designs were dispersed and made inefficient use of space. Simpson, for example,[14] disclosed a system for adjusting the pressure of a mattress pad. Simpson (Ex. 1027), 1:38-47. Referring to Figure 1, below, the system included a motor 13 (orange), flywheel 12 (blue), and a pump 8 (red), connected to the motor 13 and flywheel 12 through connecting rod 11 and a

[14] For additional examples of dispersed, space-inefficient pump designs, see: Hart (Ex. 1026), Fig. 8; U.S. Patent No. 2,684,672 to Summerville (Ex. 1044), Figs. 1 and 2; Talley (Ex. 1035), Fig. 5; U.S. Patent No. 3,462,778 to Whitney (Ex. 1036), Fig. 1.

reciprocating piston rod 10. As reflected in Figure 1, below, this system was uncontained by any sort of enclosure. As a result, the design made inefficient use of space.

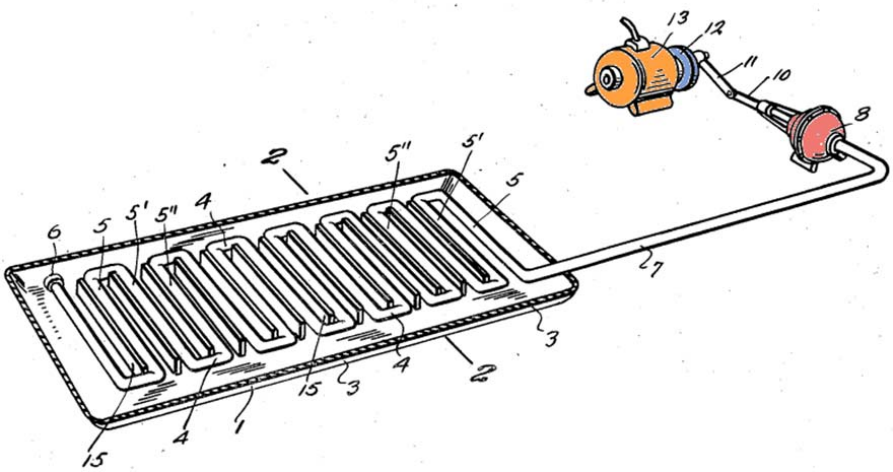

Ex. 1027.

92. Recognizing the inefficiency of uncontained designs like Simpson's, prior art inventors began to focus on making more **compact, space-efficient** pumps. They accomplished this by containing the pump components, including, for example, directional control valves,[15] in an enclosure or housing.

[15] *See, e.g.,* Walker (Ex. 1010), Figs. 20-31; Mogaki (Ex. 1030), Fig. 3B and 7; Grant (Ex. 1031), Figs. 1-7, 11; U.S. Patent No. 5,611,772 to Fujimoto (Ex. 1045), Figs. 1, 4-6; Gilroy (Ex. 1037), Figs. 8-9.

93. In 1955, for example, Rand 986 recognized that a housing-contained control apparatus 13 could easily "be positioned under the bed or in another inconspicuous place." Rand 986 (Ex. 1029), 2:8-11.

94. Later, in 1999, Bock appreciated that a controller "contained within a compact housing" could more easily "be floor or bed mounted" (Bock (Ex. 1032), Abstract), and made it more "readily transportable" (*id.* at 3:19-21).

95. Unitizing the pump with a housing would have further resulted in **decreased manufacturing and logistics costs**. Specifically, a POSA would have recognized that containing a pump's components inside a housing would have reduced the part count of the air pump assembly, as the air pump assembly components would be unitized, which would have simplified the manufacturing process. This would have also simplified the interface between the air pump assembly and the air mattress during the manufacturing and logistics processes.

96. Prior art inventors also appreciated that using an enclosure or housing provided another layer of protection (i.e., increased **durability**) for the pump components. For example, Chaffee recognized that its housing served "to protect the inner workings of the pump." Chaffee (Ex. 1006), 4:20.

97. Building on the 1888 built-in pump design disclosed in Hargin (Ex. 1023), as discussed in paragraphs 56-60, above, prior art inventors throughout the

20th century also continued to recognize the advantages of designing pumps, both motorized and manual, built into the body of the inflatable product.[16]

98. ***First***, prior art inventors recognized that a pump built into the inflatable body was a more integrated, portable design.[17]

99. For example, and referring to Figure 1, below, Parienti disclosed an air mattress pump (orange) that was "made interdependent with the mattress by

---

[16] For additional examples of built-in pump designs other than those discussed below, see: U.S. Patent No. 4,702,235 to Hong (Ex. 1046), Fig. 6, Abstract; U.S. Patent No. 4,862,533 to Adams (Ex. 1009), Figs. 11-12; Fink (Ex. 1034), 5:53-6:9, Fig. 7A; U.S. Patent No. 6,267,739 to Cengarle (Ex. 1047), Fig. 1, 2:31-36; U.S. Patent No. 795,108 to Doellinger (Ex. 1048), Figs. 1, 3; U.S. Patent No. 2,698,028 to Lee (Ex. 1049), Figs. 2, 3; U.S. Patent No. 3,155,991 to Dunham (Ex. 1050), Fig. 1; U.S. Patent No. 6,287,095 to Saputo (Ex. 1051), Fig. 1.

[17] This is the same purported advantage touted in the '394 Patent. *See* Ex. 1001, 1:24-28 (claiming that the built-in design "eliminat[es] the need for an external pump"); 1:31-33 (claiming that the built-in design makes for an air mattress that is "easily operated and conveniently carried"); *see also* Ex.1015, at 7-9. However, as I also discuss in this section, this was an advantage that was well known to a POSA before the Priority Date. *See* ¶¶ 98-100.

means of gluing or any other means." Parienti (Ex. 1008), 1:24-25. According to Parienti, such a design was more convenient as it meant there was "[n]o more need to get an air pump" because the pump was already included with the mattress. *Id.* at 1:25-26.

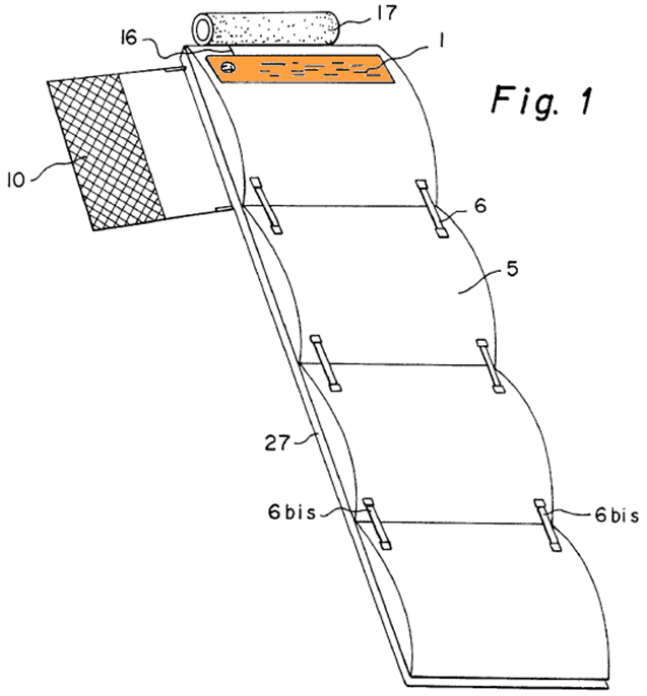

100. Chaffee, too, recognized that "portability is desired" for inflatable devices and disclosed a built-in pump design in response to this recognized need. Chaffee (Ex. 1006), 1:19; *see also* U.S. Patent No. 2,493,067 to Goldsmith (Ex. 1007), Fig. 6, 4:1-15 (explaining that "no outside unit is necessary" with a built-in design); U.S. Patent No. 5,711,041 to Chen (Ex. 1052), 1:38-40 (explaining that a non-built-in design meant that "owners must always carry the pump in order to inflate the air mattress").

101. ***Second***, prior art inventors recognized that a pump built into the inflatable body was a more compact design, particularly if the pump was also partially or wholly recessed within the inflatable body.

102. For example, Miller disclosed a pump built into the inflatable body of a seat, as it described an "electric motor driven air pump subassembly 24 that is disposed inside the air cell 20 and welded in place." Miller (Ex. 1013), 3:31-33. Miller described this as "a compact design," which: (1) "facilitate[s] handling and shipment" of the inflatable product; and (2) "reduce[s] space requirements in the seat." *Id.* at 2:40-45.

103. Chaffee also recognized a need for compact designs, as "space is limited" in inflatable devices. Chaffee (Ex. 1006), 1:19. As a result, Chaffee disclosed a built-in pump design, which "reduc[ed] the opportunity for fluid controller 80 to impact or interfere with the use of inflatable device 10,"[18] such as

[18] *See also, e.g.*, U.S. Patent No. 5,794,289 to Wortman (Ex. 1053), 12:47-50 (recognizing that placement of the pump "at a location away from the mattress [] may result in the hose [] and any other lines from the pump to the mattress being in the way of persons moving about the room.").

allowing for the inflatable mattress "to fit into a standard sized bed frame." Chaffee, 4:50-62.[19]

104. ***Third***, prior art inventors recognized early on that a pump built into the inflatable body was a more durable design.

105. For example, just as Hargin recognized in 1888,[20] POSAs have continued to recognize the enhanced pump protection benefits of built-in designs. *See, e.g.,* U.S. Patent No. 3,068,494 to Pinkwater (Ex. 1054), 1:29-31 (describing built-in air pumps as being "resistant to chemical and physical attack, especially to moisture and oxidation").

106. ***Fourth***, prior art inventors recognized that a pump built into the inflatable body provided cost and marketability advantages, as well. For example, Chen, explained that a non-built-in design meant that "users must purchase separate pumping apparatuses in order to use" the mattress, which "increase[d] the

---

[19] I understand that Patent Owner claims a benefit of the purported "built into" pump invention in the '394 Patent to be that "bed sheets do not 'bulge' out at the location of the pump." Ex. 1015 at 8. Interestingly, this benefit is absent from the '394 Patent but closely resembles the benefit touted in Chaffee here.

[20] *See* Hargin (Ex. 1023), Fig. 1, 1:9-14, 2:123-132, 3:18-22; *see also* ¶¶ 56-60, above.

overall cost of the air mattress and, thus, limit[ed] marketability." Chen (Ex. 1052), 1:34-38; *see also* Chaffee (Ex. 1006), 1:19; Parienti (Ex. 1008), 1:24-29; Goldsmith (Ex. 1007), Figs. 1, 6, 4:1-15. As a further cost/marketability advantage, built-in designs would have reduced the opportunity for a user to misplace or lose the pump apparatus, as the pump is attached to the inflatable product.

B. Design Analysis for Inflatable Products with Pumps

107. With the evolution of the industry as background, which I just described in § VI.A, above, as of the Priority Date, a POSA designing an inflatable product with a pump would have followed a basic design process. As relevant here, that process would have focused on four (4) key features, and the POSA would have been well-aware of the general options available for each of those four design features, as I have summarized in the following table.

Design Feature	Design Option #1	Design Option #2	Design Option #3
1. Pump power	Manual[21]	Motorized[22]	--
2. Pump layout	Components uncontained[23]	Components partially contained in	Components contained in

[21] *See* ¶¶ 52-60, above.

[22] *See* ¶¶ 62-68, above.

[23] *See* ¶ 91, above.

		housing[24]	housing[25]
3. Pump location	External to inflatable body[26]	Built into inflatable body[27]	Built into inflatable body and recessed[28]
4. Inflatable product flow control	Power inflate, vent deflate[29]	Power inflate, power deflate via Reversible Pump Assembly[30]	Power inflate, power deflate via Uni-directional Pump Assembly[31]

Table 1: Basic Design Table

108. Additionally, based on the evolution of inflatable products with pumps, as of the Priority Date, a POSA also would have distilled five (5) key design factors from the prior art that a POSA would have considered for each of the above design options for each design feature. Specifically, when analyzing options for each of the four design features in Table 1, above, a POSA would have focused on the following five key design factors (as I also indicated in my above

[24] *See, e.g.*, Wu (Ex. 1005), Figs. 1 and 2; Adams (Ex. 1009), Figs. 11 and 12.

[25] *See* ¶¶ 92-96, above.

[26] *See* ¶¶ 64-67, 91, above.

[27] *See, e.g.*, Parienti (Ex. 1008), 1:22-30, Fig. 7.

[28] *See* ¶¶ 56-60, 101-03, above.

[29] *See* ¶¶ 70-71, above.

[30] *See* ¶¶ 74-77, above.

[31] *See* ¶¶ 74, 78-89, above.

analysis): **(1) Efficiency (of time and labor); (2) Spatial effiency; (3) Durability; (4) Cost; and (5) Weight**.

109. As I explained above, the prior art taught a POSA the following about each of these design factors:

- **Efficiency (of time and labor)**: A POSA would have sought to design an inflatable product with a pump that can function quickly and with minimal effort from the user. *See* ¶¶ 52-59, 62, 73, 98-100, 106, above.
- **Spatial effiency**: A POSA would have sought to design a compact pump and a compact assembly of the pump with the inflatable product. *See* ¶¶ 63-67, 88-89, 91-94, 101-03, above.
- **Durability**: A POSA would have sought to make a durable pump and also a durable assembly of the pump and the inflatable body in order to create a quality, lasting product. *See* ¶¶ 57-60, 96, 104-05, above.
- **Cost**: A POSA would have sought to minimize costs as much as possible but still maintain desired quality and functionality. *See* ¶¶ 88-89, 95, 106, above.
- **Weight**: A POSA would have sought to minimize the weight of the pump and inflatable product as much as possible, as doing so promotes a compact design, reduces the overall product weight for the

customer, and potentially decreases some costs (e.g., shipping costs). *See* ¶¶ 63-67, 88-89, above.

110. A POSA would have considered and weighed each of the foregoing factors when considering the pros and cons of each option for each design feature generally set forth in Table 1, above. I will discuss these in more detail below for each Ground, below.

C. The '394 Patent

111. Applying the '394 Patent to the Basic Design Table (Table 1), above, the Challenged Claims generally cover the following design options (highlighted):

Design Feature	Design Option #1	Design Option #2	Design Option #3
1. Pump power	Manual	Motorized (Claims 1-12 and 16-23)	--
2. Pump layout	Components uncontained	Components partially contained in housing (Claims 1-11, 16-22)	Components contained in housing (Claims 12 and 23)
3. Pump location	External to inflatable body	Built into inflatable body (Claims 1-12 and 16-23)	Built into inflatable body and recessed
4. Inflatable product flow control	Power inflate, vent deflate	Power inflate, power deflate via Reversible Pump Assembly	Power inflate, power deflate via Uni-directional Pump Assembly (Claims 1-12 and 16-23)

Table 2: '394 Patent Table

D. The Asserted Prior Art

112. In this declaration, I focus my analysis on five prior art references. In this section, I provide a brief overview of those references.

1. *Wu*

113. Referring to Figure 1, below, Wu is directed to "a system [10] [red] for supplying air and controlling the flow of air into and out of the chambers of a patient supporting air mattress [400] [green]." Wu (Ex. 1005), Abstract. The system 10 (red) includes a Uni-directional Pump Assembly comprised of rotary valve 100 (orange) and an electric motor-driven blower 15 (blue). *Id.* at 2:44-47. *See also* Provisional App. No. 60/278,925 (the "Wu '925 Application") (Ex. 1066), at 4:4-6, 15:5-7.

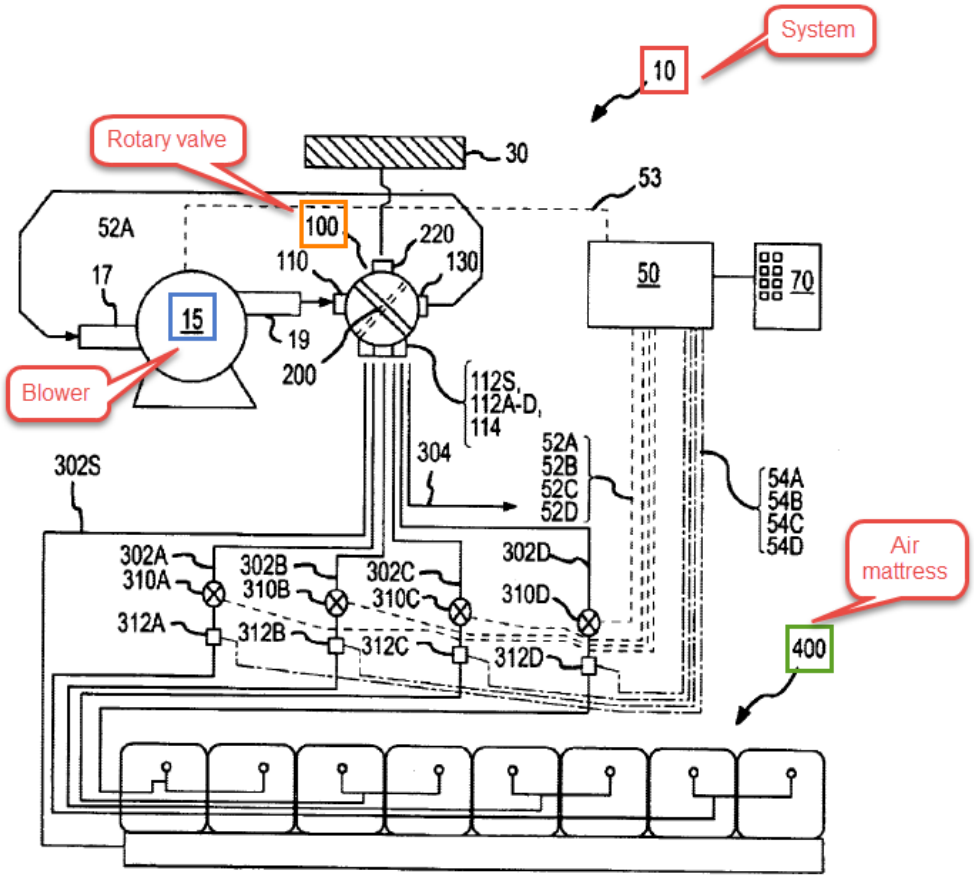

FIG.1

Ex. 1005, Fig. 1.

114. The gate member 200 of Wu's rotary valve 100 includes two positions for controlling inflation and deflation. As I explain in more detail below, and referring to Figure 1, above, and Figure 2, below, this rotary valve 100 is a variation of a four way, two position (i.e., 4/2) directional control valve. *See* ¶¶ 80-86, above. Specifically, Wu disclosed the following four ports:

i. **Port 1**: atmosphere port (through 220);

ii. **Port 2**: blower inlet port (through 130);

iii. **Port 3**: blower outlet port (through 110); and

iv. **Port 4**: air mattress port (through the various 112 openings).[32]

In a first position, gate member 200 connects atmosphere port 220 to blower inlet port 130 and blower outlet port 110 to the various air mattress supply ports 112 to "direct the flow of air from the blower to the chambers of the air mattress in a pressurizing mode[.]" Wu, 2:4-5. In a second position, gate member 200 connects the various air mattress supply ports 112to blower inlet port 130 and blower outlet port 110 to atmosphere port 220 to "route the flow of air from the air mattress into the intake of the blower in a vacuum mode in which the air mattress is rapidly deflated." Wu, 2:5-8. *See also* Wu '925 Application (Ex. 1066), 3:4-8

[32] A POSA would have understood Wu's various 112 air mattress supply openings to be a single port, as these openings communicate with the same destination—air mattress 400—but do so by different paths. *See, e.g.,* Scott (Ex. 1312), Fig. 12, 5:49-50 (identifying valve 68 as a "two-position, four-way valve 68" even though the port to bladder 22 included two paths 36, 40).

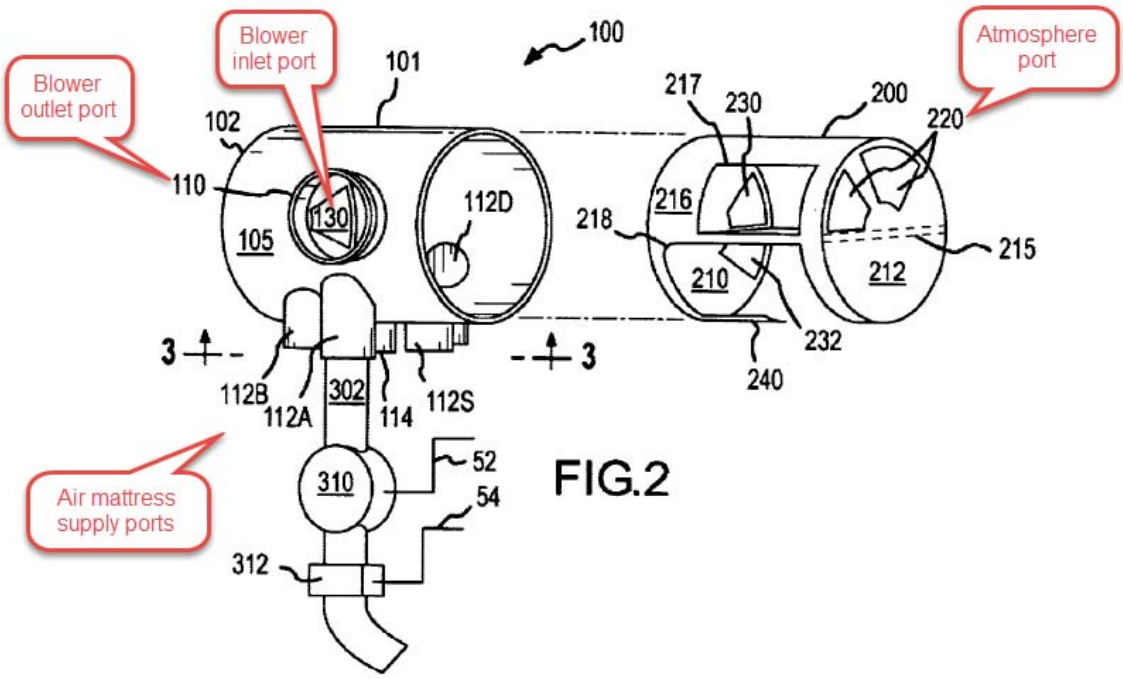

FIG.2

115. In an effort to assist the Board's understanding of Wu's rotary valve 100, I have enlisted the help of graphics specialist 3B Studio, Inc. Exhibits 1068, 1069, and 1070 are true and accurate graphic animations prepared by 3B Studio, at my direction, of Wu's system 10 (shown in Figure 1) and Wu's rotary valve 100 (shown in Figure 2) in both the inflate (Exs. 1068 and 1070) and deflate (Exs. 1069 and 1070) operations, as described by Wu. These animations add nothing beyond what Wu disclosed. At various points throughout my analysis, below, I rely on screenshot stills of these animations to further assist the Board's understanding of the Wu reference.

116. In short, and as I explain in more detail, below, Wu disclosed the following general design options (highlighted) from Table 1, above:

Design Feature	Design Option #1	Design Option #2	Design Option #3
1. Pump power	Manual	Motorized	--
2. Pump layout	Components uncontained	Components partially contained in housing	Components contained in housing
3. Pump location	External to inflatable body	Built into inflatable body	Built into inflatable body and recessed
4. Inflatable product flow control	Power inflate, vent deflate	Power inflate, power deflate via Reversible Pump Assembly	Power inflate, power deflate via Uni-directional Pump Assembly

Table 3-A: Wu Table

117. Wu is prior art to the '394 Patent. Wu stems from a provisional application filed within a year prior to the March 26, 2002 filing date of the application that led to Wu: the Wu '925 Application (Ex. 1066) filed on March 26, 2001.

118. The Wu '925 Application supports the claims that eventually issued in Wu, as I have shown in the following chart regarding claims 1 and 2 of Wu. I have demonstrated how the Wu '925 Application supports these and the remaining claims in Wu in Exhibit 1067 to this declaration.

Wu Claim Language	Wu '925 Application (Ex. 1067)
1. (Preamble) A system for	" Continuous exhaust port 114 connects to a line 304 leading *to the outside environment* and provides a passageway for air to

Wu Claim Language	Wu '925 Application (Ex. 1067)
controlling the flow of air from between an outside environment,	continuously flow through blower 15 to cool blower 15 during all modes of operation" (4:25-28, emphasis added) "When in the second position, gate member 200 directs air from air mattress 400 into intake 17 of blower 15 while air leaving blower 15 is *directed through filter 30 to the outside environment* (7:11-13, emphasis added) "As can be better understood by referring to FIG. 1, ports 220 lead to filter 30 and *the outside environment*" (8:7-8, emphasis added) "Also when gate member 200 is in the second, vacuum position, blower exhaust air passes through port 110 and through second end wall ports 220 *into the outside environment* (while upper radial opening 230 is blocked by base wall 102 of housing 101). (9:8-12, emphasis added) "When gate member 200 is in this second position, air is sucked out of air mattress 400 shown in FIG. 1 and blower exhaust is *expelled into the outside environment* through filter 30 shown in FIG. 1." (9:12-14, emphasis added) "…a rotary valve having an intake port in communication with the blower exhaust port, a continuous exhaust port *in communication with and[sic] outside environment*, air mattress supply ports in communication with air mattress supply lines leading to the chambers of the air mattress, a port in communication with the blower intake, *a port in communication with an external environment* and a rotary gate member that moves between a first position where air enters rotary valve through the port *in communication with the external environment*, exits the port in communication with the blower intake passes through the blower, enters the rotary valve through the intake port of the rotary valve and exits the rotary valve through the continuous exhaust port and the air mattress supply ports so that air is supplied under pressure to the chambers of the air mattress and a second position where air enters the rotary

Wu Claim Language	Wu '925 Application (Ex. 1067)
	valve through the air mattress supply ports, exits the port in communication with the blower intake, passes through the blower, enters into the rotary valve through the intake port of the rotary valve and exits the rotary valve through a port *in communication with an external environment* so that is sucked out of the mattress…" (10:4-19, claim 1(b), emphasis added) " …the second end wall having ports above the horizontal wall for opening pneumatic communication *between the upper chamber and an outside air environment*,..." (12:5-7, claim 2(b), emphasis added) "…so that air from the blower may pass to the outside environment…" (12:29-30, claim 2(b)) "...a continuous exhaust line connected to the rotary valve continuous exhaust port for pneumatic communication between the rotary valve continuous exhaust port and the outside environment…" (13:6-8, claim 2(c)) Figure 1-2
a blower having an intake port and an exhaust port,	"The variable speed blower has an intake and an exhaust port." (3:3) "The intake of the two position rotary valve is connected to the blower *exhaust port*" (3:3-4, emphasis added) "Blower 15 has an intake port 17 and an exhaust port 19." (4:17) "As is shown in FIG. 1 rotary valve 100 has an intake port 110 that is in pneumatic communication with *exhaust port 19 of blower 15*." (4:19-20, emphasis added) "The *blower intake 17* is connected by an air tight chamber (not shown) to a port 130 in rotary valve 100." (4:20-22, emphasis added) "When in second position, gate member 200 directs air from the

Wu Claim Language	Wu '925 Application (Ex. 1067)
	air mattress 400 *into intake 17 of blower 15*, while air leaving blower 15 is directed through filter 30 to the outside environment. Because air from air mattress 400 is now routed to the *intake of blower 15*, air mattress 400 quickly deflates." (7:11-15, emphasis added) "…so that outside air can flow through the second end wall ports 220 and radial port 130 and into the *intake of blower 15*." (8:26-27, emphasis added) "…while outside air is drawn in through filter 30 shown in FIG. 1 and into the *intake of blower 15*." (8:29-30, emphasis added) "…through first end wall lower port 232 then through radial port 130 and into the *intake of blower 15*." (9:7-8, emphasis added) "...a variable speed blower having an intake port and an exhaust port…" (10:3, claim 1(a)) "…a rotary valve having an intake port in communication with *the blower exhaust port*, a continuous exhaust port in communication with and [*sic*] outside environment, air mattress supply ports in communication with air mattress supply line leading to the chambers of the air mattress, a port in communication with *the blower intake*, a port in communication with an external environment and a rotary gate member that moves between a first position where air enters rotary valve through the port in communication with the external environment, exits the port in communication with the *blower intake* passes through the blower, enters the rotary valve through the intake port of the rotary valve and exits the rotary valve through the continuous exhaust port and the air mattress supply ports so that air is supplied under pressure to the chambers of the air mattress and a second position where air enters the rotary valve through the air mattress supply ports, exits the port in communication with the *blower intake*, passes through the blower, enters into the rotary valve through the intake port of the rotary valve and exits the rotary valve through a port in

Wu Claim Language	Wu '925 Application (Ex. 1067)
	communication with an external environment so that is sucked out of the mattress…" (10:4-19, claim 1(b), emphasis added) "...an electric motor powered variable speed blower having an intake port and an exhaust port…" (11:11-12, claim 2(a)) "…the outer wall having a rotary valve intake port that is in pneumatic communication with the *exhaust port of the blower*…" (11:16-17, claim 2(b), emphasis added) "…the base wall having a radial port that is position in a radially opposite fashion from the rotary valve intake port and that is in pneumatic communication with *the blower intake port*..." (11:23-25, Claim 2(b), emphasis added) "…thereby establishing communication between the *blower intake* and the second end wall ports…" (12:15-16, claim 2(b), emphasis added) "…thereby establishing communication between the *blower exhaust* and the second end wall ports…" (12:27-29, claim 2(b), emphasis added) "…so that *the blower intake* is in communication with the plurality of valve housing exhaust ports…" (13:3-4, Claim 2(b), emphasis added) "..air is drawn out of the air mattress and through *the intake of the blower*…" (14:22-23, Claim 2(g) emphasis added) Figure 1
and the chambers of a patient supporting low air loss mattress, comprising:	"This invention relates to a control system for controlling the flow of air to and from the chambers of a low air loss, patient supporting air mattress." (1:20-21) "The system of the present invention is a system for supplying air and controlling the flow of air to and from the chambers of a low air loss, patient supporting air mattress." (2:26-28)

Wu Claim Language	Wu ’925 Application (Ex. 1067)
	“…air mattresses supply line communicating between the rotary valve and the chambers of the air mattress…” (2:29-30) “…pressure sensors between the stepper motor controlled valves and the chambers of the air mattress and a control unit.” (3:1-2) “The two position rotary valve can either direct the flow of air from the blower to the *chambers of the air mattress* in a pressurizing mode or route the flow of air *from the air mattress* into the intake of the blower in a vacuum mode.” (3:4-7, emphasis added) “…by controlling the operation of the blower and the stepper motor controlled valves in such a way that the air pressure within the *air mattress chambers* is held within a selected pressure range. (3:18-20, emphasis added) “This type of blower is appropriate in a system which supplies air to a low air loss air mattress such as air mattress 400.” (4:13-15) “Supply port 112S connects to a line 302S that might be used to inflate a chamber or set of chambers of the air mattress that might remain inflated at a relatively constant pressure” (4:28-31) “...which leads to a chamber or set of chambers in air mattress 400.” (5:6-7) “Control unit 50 receives a signal from pressure sensor 312A indicating the air pressure within *the set of chambers of air mattress 400* that are supplied by line 302A.” (5:24-26, emphasis added) “System 10 may be connected to a type of mattress having transverse air chambers arranged in zones much like the arrangement shown in FIG.1.” (6:6-7) “Because air from air mattress 400 is now routed to the intake of

Wu Claim Language	Wu '925 Application (Ex. 1067)
	blower 15, air mattress 400 quickly deflates" (7:13-15) "When gate member 200 is in this first, pressuring position, air from blower 15 is routed to air mattress 400 shown in FIG. 1 while outside air is drawn in through filter 30 shown in FIG. 1 and into the intake of blower 15." (8:27-30) "When gate member 200 is in this second position, air is sucked out of air mattress 400 shown in FIG. 1 and blower exhaust is expelled into the outside environment through filter 30 shown in FIG. 1" (9:12-14) "A system for supplying air and controlling the flow of air into and out of the chambers of a patient supporting air mattress comprising…" (10:1-2, claim 1) "A system for supplying air and controlling the flow of air into and out of the chambers of a patient supporting air mattress comprising…" (11:9-10, claim 2) Figure 1
a rotary valve having a housing and a gate member	"As can be seen schematically in FIG.1, *rotary valve 100 includes a rotary gate member 200* Which in FIG.1, is shown in a first position for directing air flow in a pressurizing mode." (4:22-24, emphasis added) "As can be seen in FIG. 2, rotary valve 100 includes a valve housing 101, and a gate member 200." (7:16-18) "*Valve housing 101* has an open cylindrical shape…" (7:18, emphasis added) "Outer wall 105 of *valve housing 101* also has exhaust ports…" (7:20-21, emphasis added) "…Base wall 102 of *housing 101* has a radial port 130…" (7:26, emphasis added)

Wu Claim Language	Wu '925 Application (Ex. 1067)
	"Rotary gate member 200 is received by valve housing 101 so that it can rotate within valve housing 101" (7:29-30) "Gate member 200 has a circular end wall 210 for engaging base wall 102 of valve housing 101…" (7:30-31) "Horizontal wall 215 divides *gate member 200* into an upper chamber and a lower chamber." (8:3-4, emphasis added) "Rotary gate member 200 also has a cylindrical wall 216 which is sized to fit within housing 101." (8:8-9) "The various ports and opening of *valve housing 101 and the gate member 200* are arranged so that the valve can operate in an [*sic*] pressurizing mode and a vacuum mode. (Page 8:13-15, emphasis added) "…a rotary valve including a valve housing and a rotary gate member…" (11:13, claim 2(b)) "…the rotary gate member received by the valve housing so that it can rotate within the valve housing…" (11:26-27, claim 2(b)). Figure 2
the housing including an inlet port communicating with the blower exhaust port,	"the intake of the two position rotary valve is connected to the blower exhaust port" (3:3-4) "As is shown in FIG. 1 rotary valve 100 has an intake port 110 that is in pneumatic communication with exhaust port 19 of blower 15." (4:19-20) "Outer wall 105 has an intake port 110 that connects with exhaust port 19 of blower 15." (7:19-20) "Also when gate member 200 is in the second, vacuum position, blower exhaust air passes through port 110 and out through second end wall ports 220 into the outside environment…" (9:8-11)

Wu Claim Language	Wu '925 Application (Ex. 1067)
	"…a rotary valve having an intake port in communication with the blower exhaust port…" (10:4-5, claim 1(b)) "…passes through the blower, enters the rotary valve through the intake port of the rotary valve…" (10:11-12, claim 1(b)) "…the outer wall having a rotary valve intake port that is in pneumatic communication with the exhaust port of the blower…" (11:16-17, claim 2(b)) Figure 1
air mattress supply ports communicating with lines supplying the chambers of the air mattress	"It includes an electric motor powered variable speed blower, a two position rotary valve, *air mattress supply lines communicating between the rotary valve and the chambers of the air mattress*…" (2:28-30, emphasis added) "…air exits the rotary valve through the air mattress supply lines that supply air to the air mattress." (3:8-9) "Rotary valve 100 has a continuous exhaust port 114 and a set of mattress supply ports 112S, 112A, 112B, 112C, and 112D. (4:24-25) "Supply port 112S connects to a line 302S that might be used to inflate a chamber or set of chambers of the air mattress that might remain inflated at a relatively constant pressure." (4:28-30) "A set of air mattress supply lines 302A, 302B, 302C, and 302D connect to mattress supply ports 112A, 112B, 112C, and 112D respectively…" (4:30-31; 5:1) "Outer wall 105 of valve housing 101 also has exhaust ports including continuous exhaust port 114 and air mattress supply ports 112S, 112A, 112B, 112C, and 112D for supplying air to various sets of chambers of air mattress 400 shown in FIG. 1." (7:20-23)

Wu Claim Language	Wu '925 Application (Ex. 1067)
	"…air mattress supply ports in communication with air mattress supply lines leading to the chambers of the air mattress…" (10:5-7, claim 1(b)) "…air mattress supply lines connecting each of the air mattress supply ports with at least one chamber of the air mattress…" (13:9-10, claim 2(d)) Figures 1, 2 and 3
and an outlet port communicating with the blower intake port,	"The blower intake 17 is connected by an air tight chamber (not shown) to a port 130 in rotary valve 100." (4:20-22) "…so that outside air can flow through second end wall ports 220 and *radial port 130 and into the intake of blower 15*." (8:26-27, emphasis added) "…a rotary valve having an intake port in communication with the blower exhaust port, a continuous exhaust port in communication with and [*sic*] outside environment, air mattress supply ports in communication with air mattress supply line leading to the chambers of the air mattress, *a port in communication with the blower intake*, a port in communication with an external environment and a rotary gate member that moves between a first position where air enters rotary valve through the port in communication with the external environment, *exits the port in communication with the blower intake* passes through the blower, enters the rotary valve through the intake port of the rotary valve and exits the rotary valve through the continuous exhaust port and the air mattress supply ports so that air is supplied under pressure to the chambers of the air mattress and a second position where air enters the rotary valve through the air mattress supply ports, *exits the port in communication with the blower intake*, passes through the blower, enters into the rotary valve through the intake port of the rotary valve and exits the rotary valve through a port in communication with an external environment so that is sucked out of the mattress…" (10:4-19, claim 1(b), emphasis added)

Wu Claim Language	Wu '925 Application (Ex. 1067)
	"…the base wall having a radial port that is positioned in a radially opposite fashion from the rotary valve intake port and that is in pneumatic communication with the blower intake port…" (11:23-25, claim 2(b)) Figures 1and 2
the housing rotatably receiving the gate member,	"Rotary gate member 200 is received by valve housing 101 so that it can rotate within the valve housing 101." (7:29-30) "Rotary gate member 200 has a cylindrical wall 216 which is sized to fit within housing 101." (8:8-9) "…the rotary gate member received by the valve housing [101] so that it can rotate within the valve housing [101]." (11:26-27, claim 2(b)) Figure 2
the gate member divided by a wall into a first portion and a second portion	"Gate member 200 has a first circular end wall…*and a horizontal 215 extending between first end wall 210 and the second end wall 212. Horizontal wall 215 divides gate member 200 into an upper chamber and a lower chamber*." (7:30-31; 8: 1-4, emphasis added) "…the rotary gate member having… a horizontal wall extending between the first end wall and the second end wall that divides the gate member into an upper chamber and a lower chamber…" (11:27-31, claim 2(b)) Figures 1and 2
and further having a first port communicating the first portion with the outside environment	"Second end wall 212 has ports 220 above horizontal wall 215. As can be better understood by referring to FIG. 1, ports 220 lead to a filter 30 and the outside environment." (8:6-8) "…a rotary valve having…a port in communication with an external environment…" (10:4-8, Claim 1(b)) "…the second end wall having ports above the horizontal wall for opening the pneumatic communication between the upper

Wu Claim Language	Wu '925 Application (Ex. 1067)
	chamber and an outside air environment…" (12:5-7, claim 2(b)) Figures 1 and 2
a second port communicating with the first portion and a third port communicating with the second portion,	"an upper wall port 217 opens into the upper chamber of gate member 200 while a very extensive lower wall port 218 open up almost all of the lower chamber of gate member 200" (8:9-12) "…the cylindrical outer wall of the gate member having an upper wall port above the horizontal wall that opens in the upper chamber and a large lower port below the horizontal wall that opens into the lower chamber…" (12:8-10, claim 2(b)) Figure 2
the gate member rotatable between a first position aligning the gate member second port with the valve housing outlet port and communicating the gate member second portion with the valve housing inlet port and the air mattress supply ports, thereby communicating the blower intake with the outside environment and communicating the blower exhaust with the air mattress supply ports,	"<u>The two position rotary valve can either direct the flow of air from the blower to the chambers of the air mattress in a pressurizing mode</u>, or route the flow of air from the mattress into the intake of the blower in a vacuum mode," (3:4-7, emphasis added) "When the gate member 200 is in this first position, air can flow through port 110 of housing 101, through lower wall port 218 of gate member 200, into the lower chamber of the gate member 200 and out again through lower wall port 218 and then out through exhaust port 114 and air mattress supply ports 112S, 112A, 112B, 112C and 112D. Also, while gate member 215 is in the first position, upper radial opening 230 of gate member 200 is aligned with radial port 130 of valve housing 101 so that outside air can flow through second end wall ports 220 and radial port 130 and into the intake of blower 15. When gate member 200 is in this first, pressurizing position, air from blower 15 is routed to air mattress 400…" (8:18-28) "…a rotary gate member that moves between first position where air enters rotary valve through the port in communication with the external environment, exits the port in communication with the blower intake, passes through the blower, enters the rotary valve through the intake port of the rotary valve and exits the rotary valve through the continuous exhaust port and the mattress

Wu Claim Language	Wu '925 Application (Ex. 1067)
	supply ports so that air is supplied under pressure to the chambers of the air mattress…" (10:8-14, claim 1(b)) "the rotary gate member rotating between a first position and a second position, the first position in *which the first end wall upper radial opening is aligned with the valve housing base wall radial port*, while first end wall lower radial opening is blocked by the rotary valve base wall thereby establishing *communication between the blower intake and the second end wall ports of the rotary gate member that lead to the outside air*, the first position in which also the intake port of the valve housing and the plurality exhaust ports in the outer wall of the valve housing are all positioned below the horizontal wall of the rotary gate member and so *that the valve housing intake port and the plurality of valve housing exhaust ports are all in communication with the rotary gate member lower wall port* whereby air may flow *from the blower, through the valve housing intake port, into the lower chamber of the rotary gate member and out through the plurality of valve housing exhaust ports*,… (12:11-24), claim2(b), emphasis added) Figure 1-2
and a second position aligning the gate member third port with the valve housing outlet port and communicating the first portion of the gate member with the valve housing inlet port and communicating the second portion of the gate member with	"The two position rotary valve can either direct the flow of air from the blower to the chambers of the air mattress in a pressurizing mode, *or route the flow of air from the mattress into the intake of the blower in a vacuum mode,*" (3:4-7, emphasis added) "When in second position, gate member 200 directs air from air mattress 400 into intake 17 of the blower 15 while air leaving blower 15 is directed through filter 30 to the outside environment. Because air from air mattress 400 is now routed to the intake of blower 15, air mattress 400 quickly deflates." (7:11-15) "When the gate member 200 is in this second, vacuum position, lower radial opening 232 of gate member 200 aligns with radial port 130 of housing 101 so that air is pulled in through air

Wu Claim Language	Wu ’925 Application (Ex. 1067)
the air mattress supply ports, thereby communicating the blower exhaust with the outside environment and communicating the blower intake with the air mattress supply ports to quickly deflate the air mattress.	mattress supply ports 112S, 112A, 112B, 112C and 112D, through first end wall lower port 232, then through radial port 130 and into the intake of blower 15. Also when gate member 200 is in the second, vacuum position, blower exhaust air passes through port 110 and out through second end wall ports 220 into the outside environment (while upper radial opening 230 is blocked by base wall 102 of housing 101). When gate member 200 is in this second position, air is sucked out of air mattress 400 shown in FIG. 1 and blower exhaust is expelled into the outside environment through filter 30 shown in FIG. 1” (9:1-14) “…and a second position where air enters the rotary valve through the air mattress supply ports, exits the port in communication with the blower intake, passes through the blower, enters the rotary valve through the intake port of the rotary valve and exits the rotary valve through a port in communication with an external environment so that air is sucked out of the mattress…” (10:14-19, claim 2(b)) “The second position in which the intake port of the valve housing is above below [*sic*] the horizontal wall of the rotary gate member and while first end wall upper radial opening is blocked by the rotary valve base wall thereby *establishing communication between the blower exhaust and the second end wall ports of the rotary gate member that lead to the outside air* so that air from the blower may pass to the outside environment and also in which the plurality [of] exhaust ports in the outer wall of the valve housing are all positioned below the horizontal wall of the rotary gate member and the first end wall *lower radial opening that is below the horizontal wall is aligned with the valve housing base wall radial port* so that the blower intake is in communication with the plurality of valve housing exhaust ports whereby air may be drawn in through the exhaust ports and into the blower…” (12:25-31; 13:1-5, emphasis added) Figures 1and 2
2. The system of claim 1, wherein	“The stepper motor controlled valves in the air mattress supply lines can incrementally close to control the flow of air in the air

Wu Claim Language	Wu '925 Application (Ex. 1067)
the air mattress supply lines have electrically controlled valves for controlling the amount of air that can flow therethrough.	mattress supply lines" (3:12-14) "A set of air mattress supply lines 302A, 302B, 302C and 302D connect to mattress supply ports 112A, 112B, 112C and 112D respectively and are each interrupted by control valves 310A, 310B, 310C and 310D…" (4:30-31; 5:1-3) "Control valve 310A controls the flow of air in line 302A between rotary valve 100 and air mattress 400" (5:8-9) "Control valve 310A includes a stepper motor that incrementally opens and closes valve 310A" (5:9-10) "Control unit 50 receives signals from pressure sensors 312A, 312B, 312C and 312D and responds to those signals by sending control signals to the stepper motors of control valve 310A, 310B, 310C and 310D…" (5:17-19) "Control unit 50 responds to the pressure signal by (1) transmitting a signal to incrementally *close valve 310A* when pressure sensor 312A indicates a pressure that is above the selected range of pressure or (2) transmitting a signal to *incrementally open valve 310A* when pressure sensor 312A indicated a pressure that is below the selected range of pressures…" (5:28-31; 6:1-2, emphasis added) "Control unit 50 would then receive signals from pressure sensors 312A, 312B, 312C and 312D and respond by either *opening or closing valves 310A, 310B, 310C and 310D to maintain pressure in the corresponding chambers of mattress* 400…" (6:15-18, emphasis added) "…stepper motor controlled valves interrupting the air mattress supply line, the valves capable of progressively restricting the flow of air through the air mattress supply lines in an incrementally controlled manner…" (10:20-22, claim 1(b)) "…responding to those pressure signals by…(2) transmitting a

Wu Claim Language	Wu '925 Application (Ex. 1067)
	signal to incrementally close valve 310A when pressure sensor 312A indicates a pressure that is above the selected range of pressure or (3) transmitting a signal to incrementally open valve 310A when pressure sensor 312A indicated a pressure that is below the selected range of pressures…" (10:29-31; 11:1-4, claim 1(g)) "…stepper motor controlled valves interrupting the air mattress supply line, the valves capable of progressively restricting the flow of air through the air mattress supply lines in an incrementally controlled manner…" (13:11-13, claim 2(e)) "…responding to those pressure signals by…(2) transmitting a signal to incrementally close valve 310A when pressure sensor 312A indicates a pressure that is above the selected range of pressure or (3) transmitting a signal to incrementally open valve 310A when pressure sensor 312A indicated a pressure that is below the selected range of pressures…" (13:20-26, claim 2(g)) Figures 1, 2

119. Additionally, as provided in my analysis below, the disclosure of the Wu '925 Application supports the relevant disclosure from Wu itself. Therefore, I understand that Wu is entitled to a priority date of March 26, 2001, which precedes the June 22, 2001 Priority Date of the '394 Patent. *See* ¶ 1, above.

120. Further, Wu is analogous art. As I explained above, the relevant technical field is inflatable products and/or fluid control devices. *See* ¶ 25, above. Because Wu teaches "a system for supplying air and controlling the flow of air into and out of the chambers of a patient supporting air mattress" (Wu, Abstract), Wu falls within the relevant technical field. At the very least, Wu's teachings are

reasonably pertinent to the Challenged Claims as Wu relates to a system 10 for inflating and deflating an air mattress 400, which is the general subject matter of the Challenged Claims. *See* ¶¶ 113-15, above. *See also* Wu '925 Application (Ex. 1066), Abstract, 15:5-7.

121. Additionally, Wu is not cited on the face of the '394 Patent (*see generally* Ex. 1001) and was never considered during prosecution of the '394 Patent (*see generally* Ex. 1003).

2. *Chaffee*

122. Referring to Figure 1, below, Chaffee is directed to "an inflatable device [10] with a recessed fluid controller [80]." Chaffee (Ex. 1006), Abstract.

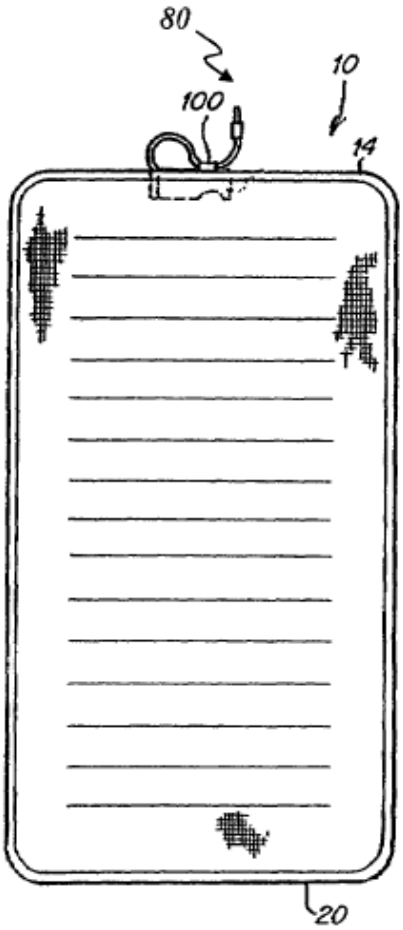

Fig. 2

123. Referring to Figure 5, below, Chaffee teaches a fluid controller 80 with a pump 81. Chaffee disclosed that pump 81 includes a "motor 84 [orange] and impeller [86] [blue]" for "draw[ing] fluid into, or out of, [a] bladder 20," as I have shown with a double-ended blue arrow. Chaffee (Ex. 1006), 4:13-15. Specifically, Chaffee disclosed an "adjustment device 100" that "allow[s] the pump to be energized such that it inflates the bladder 20," and "may reverse the direction of the pump to deflate bladder 20." *Id.* at 6:10-20. In other words, Chaffee disclosed a Reversible Pump Assembly. *See* ¶¶ 74-77, above.

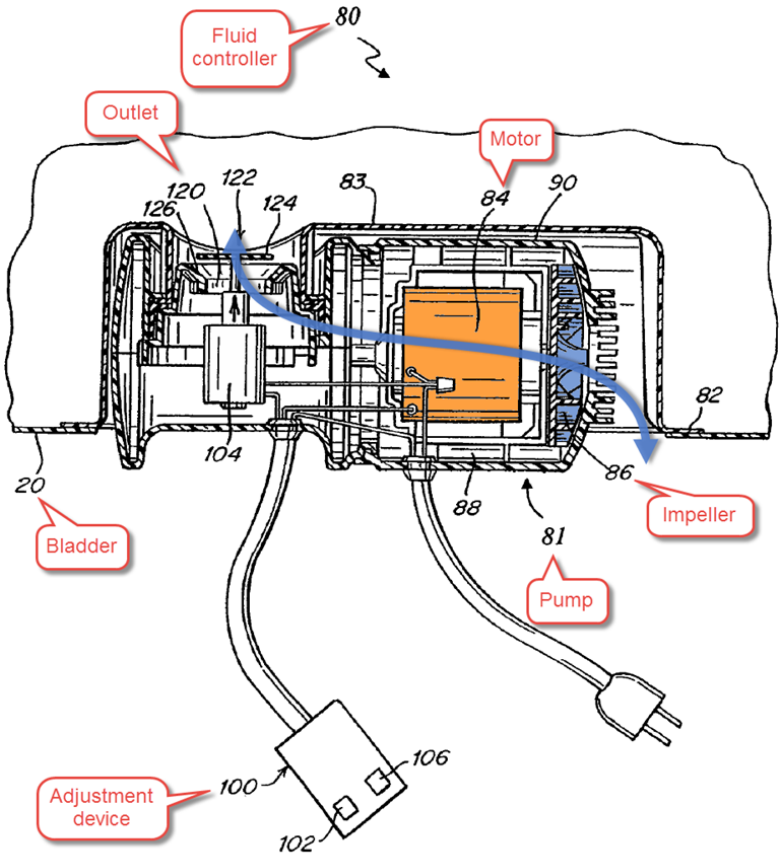

Fig. 5

124. Referring again to Figure 5, below, Chaffee further disclosed that fluid controller 80 includes a "housing 90 [orange] that surrounds the inner workings of the pump." Chaffee (Ex. 1006), 4:18-19. Chaffee taught that housing 90 may include a flange 82 (also in orange) (which includes a wall 83 [also in orange]; *see id.* at 5:9-11) that "extend[s] from housing 90" and is "adapted to connect to bladder 20" of inflatable device 10. *Id.* at 5:4-9.

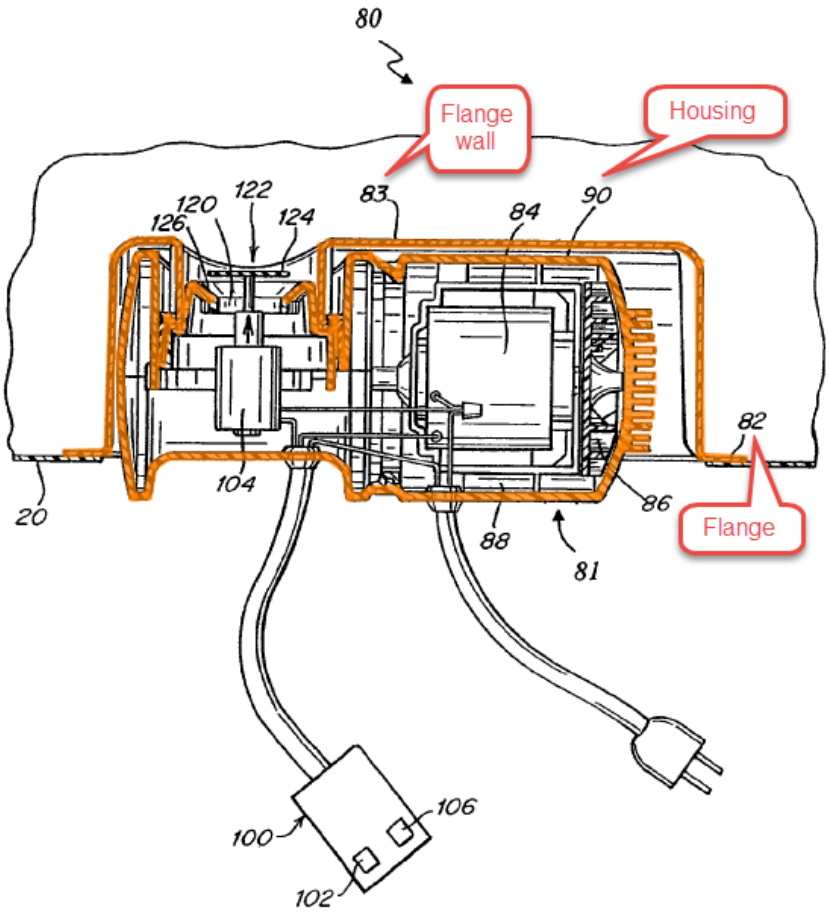

Fig. 5

125. In short, and as I explain in more detail, below, Chaffee disclosed the following general design options (highlighted) from Table 1, above:

Design Feature	Design Option #1	Design Option #2	Design Option #3
1. Pump power	Manual	Motorized	--
2. Pump layout	Components uncontained	Components partially contained in housing	Components contained in housing
3. Pump location	External to inflatable body	Built into inflatable body	Built into inflatable body and recessed
4. Inflatable	Power inflate, vent	Power inflate, power	Power inflate, power

product flow control	deflate	deflate via Reversible Pump Assembly	deflate via Uni-directional Pump Assembly

Table 3-B: Chaffee Table

126. Chaffee is prior art to the '394 Patent. Chaffee stems from an application (Application No. 09/859,706) that was filed on May 17, 2001 (*see generally* Ex. 1006), which precedes the June 22, 2001 Priority Date of the '394 Patent.[33] *See* ¶ 1, above.

127. Further, Chaffee is analogous art. As I explained above, the relevant technical field is inflatable products and/or fluid control devices. *See* ¶ 25, above. Because Chaffee teaches an inflatable device and a fluid controller (Chaffee, Abstract), Chaffee falls within the relevant technical field. At the very least, Chaffee's teachings are reasonably pertinent to the Challenged Claims as Chaffee relates to a fluid controller 80 for inflating and deflating an bladder 20, which is the general subject matter of the Challenged Claims. *See* ¶¶ 122-24, above.

[33] To the extent the Patent Owner attempts to claim an earlier Priority Date, I expressly reserve my right to show that Chaffee is entitled to a different, earlier prior art date through U.S. provisional application Nos. 60/280,040 (filed on March 30, 2001) (Ex. 1063) ("Chaffee '040 Application") and/or 60/204,836 (filed on May 17, 2000) (Ex. 1064) ("Chaffee '836 Application").

128. Additionally, although Chaffee is cited on the face of the '394 Patent (*see generally* Ex. 1001), it was not substantively considered during prosecution (*see generally* Ex. 1003).

3. *Goldsmith*

129. Referring to Figure 1, below, Goldsmith (Ex. 1007) is directed toward a mattress and means "for blowing air of varying temperatures into the inner compartment of the mattress . . . to heat or cool the mattress [11] to a temperature above or below the normal outside or surrounding temperature." Goldsmith (Ex. 1007), 1:6-12. Air pumped into air compartment 17 (not shown, below) then escapes "out through the outlet ports 19[.]" *Id.* at 3:42-43.

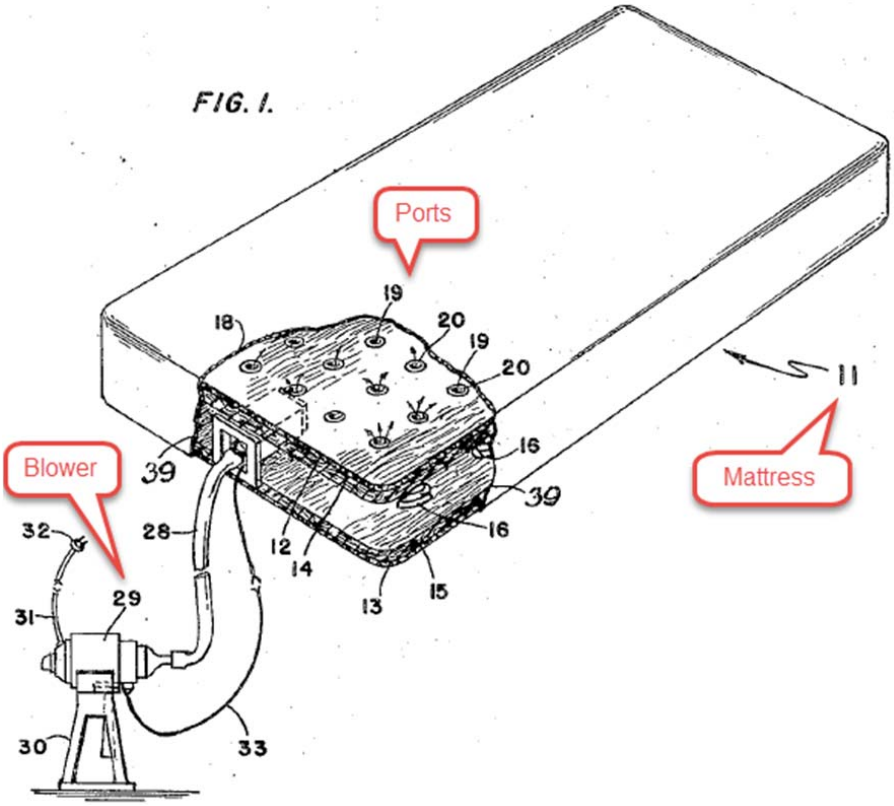

130. Referring to Figure 6, below, in one embodiment, the means for blowing air includes "a housing [42] arranged within and at one end of said mattress and carrying a blower [39' {blue}, 40 {green}] and temperature changing means [41] [red] therein." *Id.* at 1:41-44. Specifically, housing 42 is "mounted or attached to the mattress" end wall 39 (orange) of mattress air compartment 17. *Id.* at 4:3-5; *see also id.* at 2:39-46.

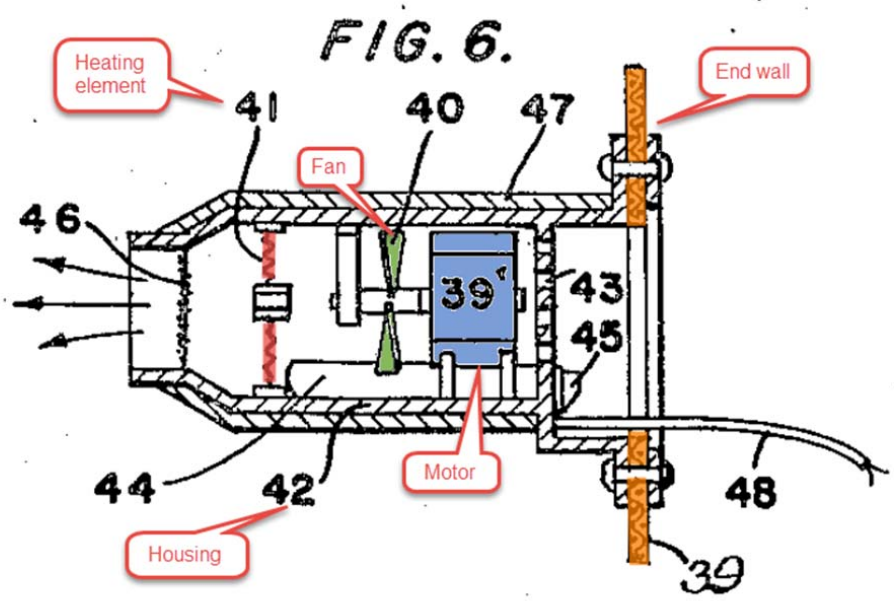

131. In short, and as I explain in more detail, below, Goldsmith disclosed the following general design options (highlighted) from Table 1, above:

Design Feature	Design Option #1	Design Option #2	Design Option #3

1. Pump power	Manual	Motorized	--
2. Pump layout	Components uncontained	Components partially contained in housing	Components contained in housing
3. Pump location	External to inflatable body	Built into inflatable body	Built into inflatable body and recessed
4. Inflatable product flow control	Power inflate, vent deflate	Power inflate, power deflate via Reversible Pump Assembly	Power inflate, power deflate via Uni-directional Pump Assembly

Table 3-C: Goldsmith Table

132. Goldsmith is prior art to the '394 Patent. Goldsmith issued on January 3, 1950, which precedes the June 22, 2001 Priority Date of the '394 Patent. *See* ¶ 1, above.

133. Further, Goldsmith is analogous art. As I explained above, the relevant technical field is inflatable products and/or fluid control devices. *See* ¶ 25, above. Because Goldsmith discloses a pumping assembly 39', 40 for "blowing air of varying temperatures into the inner compartment of the mattress" (Goldsmith (Ex. 1007), 1:6-8), Goldsmith falls within the relevant technical field.

134. Further, although Goldsmith teaches a traditional mattress, I consider the particular structure Goldsmith disclosed to be an inflatable product. Specifically, as part of the mattress structure, Goldsmith disclosed an air compartment, which was described as being "non-porous" and "airtight" to "prevent the air within the aforesaid air compartment from escaping." *See* Goldsmith, 3:25-28; *see also id.* at 4:17-21 ("A mattress comprising a casing of

non-porous material open at its top, top and bottom pads of ***non-porous*** material arranged in said casing and coacting therewith to provide an air compartment" (emphases added)). Once filled with hot air from blower 39', 40 and heating element 41, Goldsmith's mattress would necessarily and naturally expand, as the internal air pressure would build up around the ports 19 in the upper mattress layer. Therefore, Goldsmith also falls within the relevant technical field because it discloses and thus relates to an inflatable product.

135. Even if the Board finds Goldsmith to fall outside the relevant technical field, a POSA would have viewed Goldsmith as reasonably pertinent to the purported problem faced by '394 Patent inventor. As I explained above, the '394 Patent's "built-in" design purports to solve the problem in the prior art that the air pump "is separately provided" from the mattress, "requiring users to carry two items," which is "inconvenien[t]." Ex. 1001, 1:22-28. Specifically, the '394 Patent touts the "built-in" design as "eliminating the need for an external pump." *Id.* at 1:26-27. Goldsmith's teaching commends itself to this exact problem, as "no outside [pump] unit is necessary" with its built-in design. Goldsmith (Ex. 1007), 4:11-12.

136. Additionally, Goldsmith is not cited on the face of the '394 Patent (*see generally* Ex. 1001) and was never considered during prosecution of the '394 Patent (*see generally* Ex. 1003).

4. *Parienti*

137. Referring to Figure 1, below, Parienti is directed toward "an inflatable mattress [5] and an associated device [orange] for automatic inflating and deflating of the mattress." Parienti (Ex. 1008), 1:22-24. To accomplish this, Parienti disclosed a switch for "reversing the polarity of the motor[.]" *Id.* at 2:65. In other words, Parienti disclosed a Reversible Pump Assembly. *See* ¶¶ 74-77, above.

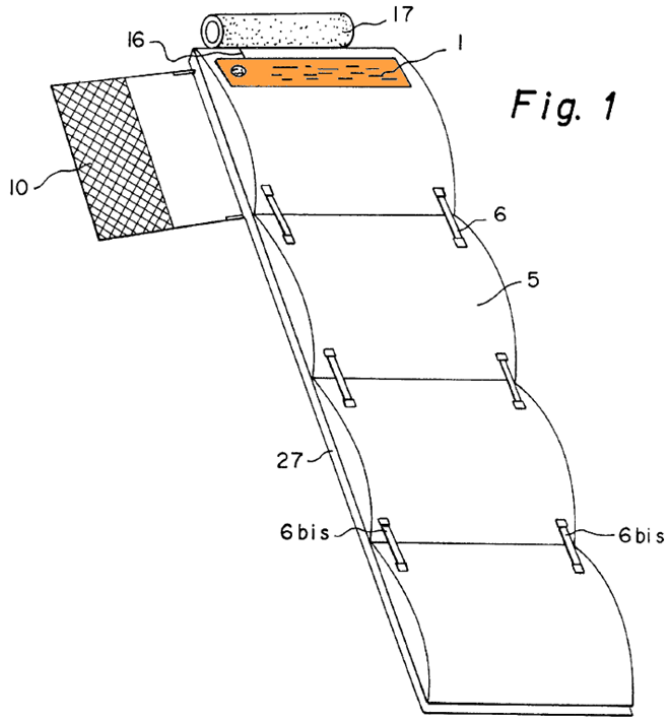

138. According to Parienti, and referring to Figure 1, above, this pump device [orange] "is made interdependent with the mattress by means of gluing or any other means." Ex. 1008 at 1:24-25. Referring to Figure 5, below, this pump device includes a photovoltaic cell array 1 and a housing [orange] with a protective

grid 8 that contains the pump components, including the motor 2 and turbine 4 (not shown). *Id.* at 2:55-3:6; *see also id.* at Figure 4.

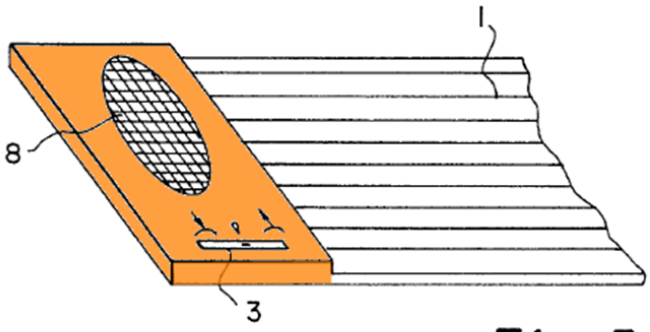

Fig. 5

139. As I explain in more detail, below, Parienti disclosed the following general design options (highlighted) from Table 1, above:

Design Feature	Design Option #1	Design Option #2	Design Option #3
1. Pump power	Manual	Motorized	--
2. Pump structure	Components uncontained	Components partially contained in housing	Components contained in housing
3. Pump layout	External to inflatable body	Built into inflatable body[34]	Built into inflatable body and recessed
4. Inflatable product flow	Power inflate, vent deflate	Power inflate, power deflate via	Power inflate, power deflate via Uni-

[34] To be clear, the outlet of Parienti's pump housing (pipe 9) extends into the inflatable mattress 5. *See* Figures 4 and 7. However, because Parienti's main pump housing itself does not extend into the inflatable mattress 5, I do not consider it to be recessed.

control		Reversible Pump Assembly	directional Pump Assembly

Table 3-D: Parienti Table

140. Parienti is prior art to the '394 Patent. Parienti issued on February 1, 2000, which precedes the June 22, 2001 Priority Date of the '394 Patent. *See* ¶ 1, above.

141. Further, Parienti is analogous art. As I explained above, the relevant technical field is inflatable products and/or fluid control devices. *See* ¶ 25, above. Because Parienti teaches an inflatable mattress and a pump device (Parienti, Abstract), Parienti falls within the relevant technical field. At the very least, Parienti's teachings are reasonably pertinent to the Challenged Claims as Parienti relates to a pump device for inflating and deflating an inflatable mattress 5, which is the general subject matter of the Challenged Claims. *See* ¶¶ 137-38, above.

142. Additionally, Parienti is not cited on the face of the '394 Patent (*see generally* Ex. 1001) and was never considered during prosecution of the '394 Patent (*see generally* Ex. 1003).

VII. CLAIM CONSTRUCTION

A. <u>"inflatable body"</u>

143. I understand that the Board determines the broadest reasonable interpretation of the claims. Based on the claims, specification, prosecution history, and relevant extrinsic evidence, as used in the '394 Patent, in my opinion, a POSA

would have understood the broadest reasonable interpretation of "inflatable body" to be a structure that expands when filled with air or other gases.

144. From submissions in the Litigation, I understand that Patent Owner proposed that inflatable body means a substantially airtight structure that expands when filled with air or other gases. Ex.1015, at 19. That is, Patent Owner agrees with the construction I proposed, but also contends a "substantially airtight" limitation is required.

145. Therefore, the only dispute over the meaning of the term "inflatable body" is whether it includes a "substantially airtight" requirement. As I explained in more detail below, a POSA would have understood that an "inflatable body" need not be "substantially airtight."

1. *The '394 Patent Claims*

146. The '394 Patent claims lack any requirement that the inflatable body be substantially airtight. Claims 1-3, 9, 11, 13, 14, 16-18, and 22 of the '394 Patent recite the term "inflatable body." *See* Ex. 1001, Claims 1-3, 9, 11, 13, 14, 16-18, and 22. But these claims simply recite the term "inflatable body" without further defining the functions or features of the "inflatable body." *See id.*

2. *The '394 Patent Specification*

147. The '394 Patent specification also lacks any requirement that the inflatable body be substantially airtight. In fact, the phrases "substantially airtight"

or "airtight" are not used in the '394 Patent. *See generally* Ex. 1001. The term "inflatable body" is used only in the Abstract of the '394 Patent, which merely states that "[a]ir flows between the interior region of the housing and the *inflatable body* during inflation and deflation." *Id.* at Abstract (emphasis added). This description says nothing about whether the "inflatable body" is "substantially airtight."

148. The '394 Patent is directed to inflatable bodies with "built-in" pump structures, which are described, for example, as being "mounted on" the inflatable body. *See, e.g.,* '394 Pat., 3:17 and Figs. 1A, 4A. Referring to Figure 1A, below, without these pump structures 11, 12—which are not themselves inflatable—the inflatable body is left with a gaping hole. *See, e.g., id.*, Figs. 1A, 4A. That is, the pump structure *must* be mounted on the inflatable body in a manner that allows air to flow through the pump and into the inflatable body, which occurs through a hole, or opening, in the inflatable body itself. *See id.* Therefore, because the "inflatable body" *must* always include a hole or opening that communicates with the pump structure, they cannot be "substantially airtight."

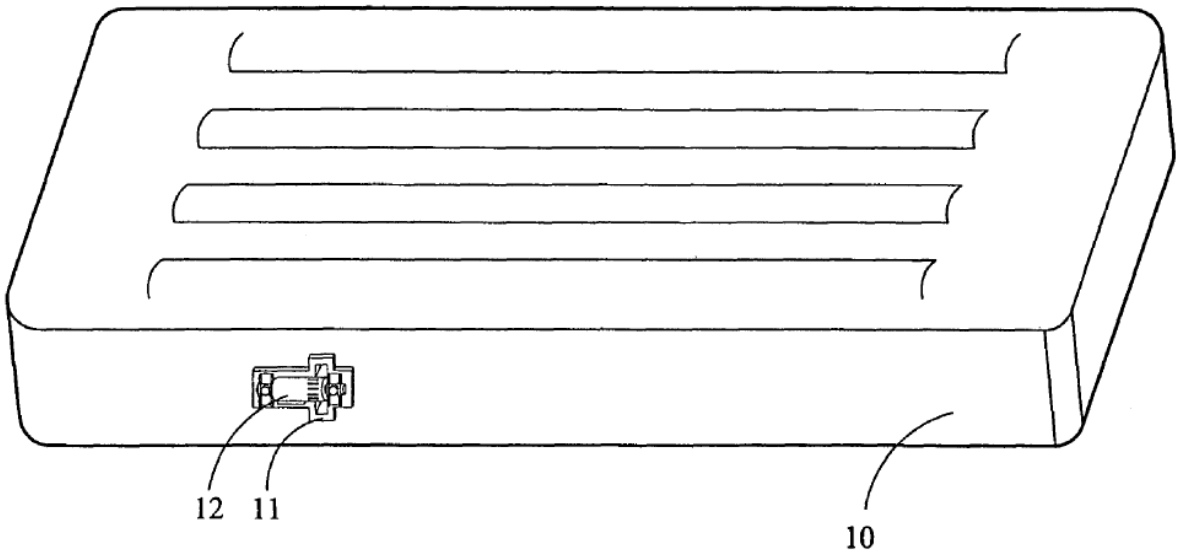

FIG. 1A

149. The broad title of the ’394 Patent—INFLATABLE PRODUCT WITH BUILT-IN HOUSING AND SWITCHING PIPE—confirms that the purported invention claimed in the ’394 Patent was intended to cover various types of inflatable products. *See generally* Ex. 1001.

3. *The ’394 Patent Prosecution History*

150. Prior art references cited during prosecution of the ’394 Patent further undermine any attempt to limit inflatable body to a “substantially airtight” structure.

151. For example, U.S. Patent No. 5,794,289 to Wortman (“Wortman”) (Ex. 1053), which Patent Owner disclosed to the PTO during prosecution of both of the ’394 Patent pursuant to its duty to disclose information material to patentability, discloses an inflatable mattress designed to relieve pressure ulcers.

As Wortman explains, prior art mattresses included "air chambers" that are "inflated and deflated to relieve excess pressure on patients" and that have "[m]icro vents . . . to produce a gentle flow of air beneath the patient." *See* Ex. 1053, 1:8-53 (citing prior art).

152. Wortman itself describes a similar embodiment in which "air cells or cushions 44 and 46" are "inflated" to certain heights and include "a ***multiplicity of pin holes of micro-vents***, illustrated at 57, in its upper layer ***to produce a gentle flow of air*** beneath the patient and to minimize moisture build-up." *Id.* at 6:26–50 (emphasis added). Thus, Wortman makes clear that it has been well-known in this art for decades to have "inflatable" structures, or bodies, that are not "substantially airtight" because they have "micro vents" that allow air to flow out of the inflatable structure.[35]

---

[35] Wortman also refutes any argument that inflation and deflation necessarily connotes a "substantially airtight" limitation. As explained above, Wortman clearly discloses prior art "inflatable" structures that are inflated and deflated, but which are not "substantially airtight" because air escapes through small openings or micro vents. Additional disclosures in Wortman and other prior art further refute this argument. *See* Ex. 1053 (Wortman) at 1:33–46, 6:33–7:7, 14:10–15:5, 15:12–65; *see also* U.S. Patent No. 6,698,046 to Wu (Ex. 1005), 2:59–62, 2:3–8 (describing

4. *The Relevant Extrinsic Evidence*

153. The extrinsic evidence, including the dictionary definitions, is consistent with my proposed construction and lacks any suggestion that the term should include a "substantially airtight" requirement.

154. Contemporaneous dictionary definitions confirm that inflatable body is not limited to a substantially airtight structure. *See* MCGRAW-HILL DICTIONARY OF SCIENTIFIC AND TECHNICAL TERMS (4th Ed. 1989) (Ex. 1059, at 3) (defining "inflated" as "open and enlarged" or "[f]illed or distended with air or gas"); THE NEW SHORTER OXFORD ENGLISH DICTIONARY (1993) (Ex. 1060, at 3) (defining "inflate" as "[d]istend by filling with air or gas").

155. Further, like Wortman discussed above, other prior art references demonstrate that the term "inflatable body" is *not* understood as a "substantially airtight" structure. Various prior art inflatable structures have perforations or apertures, including, for example:

---

an air mattress 400 with "a large number of small holes in its upper surfaces to permit air to constantly circulate around a supported patient," and a rotary valve that "route[s] the flow of air from the air mattress into the intake of the blower in a vacuum mode in which the air mattress is rapidly deflated"). *See also* Wu '925 Application (Ex. 1066), 4:15-16; 3:4-7.

- U.S. Patent No. 3,653,083 to Lapidus (Ex. 1055), at FIGS. 1–6, 3:16–19 (describing an "inflatable and deflatable tubular member (41) *having perforations* on its upper surface" (emphasis added));
- U.S. Patent No. 4,197,837 to Tringali (Ex. 1056), at FIGS. 1–2, 10, 1:9–51 (describing an "inflatable bed pad" with "[p]erforations . . . [that] allow air to escape"); *see also id.* at 1:54–2:36, 3:52–4:12;
- U.S. Patent No. 5,564,963 to Chan (Ex. 1057), at FIGS. 1–3, 4:44–65 (describing inflatable "pillow 10" with "perforations 16");
- U.S. Patent No. 4,225,989 to Corbett (Ex. 1058), at FIG. 1, 2:47–54, 4:33–43 (describing an "upper inflatable layer" with "apertures 28");
- Wu (Ex. 1005), at FIG. 1, 2:59–62 (describing an inflatable "air mattress 400" with "a large number of small holes in its upper surfaces to permit air to constantly circulate around a supported patient"). *See also* Wu '925 Application, 4:15-16.

5. *Other Considerations*

156. Furthermore, requiring an inflatable body to be substantially airtight unnecessarily introduces ambiguity into the term. Because the '394 Patent lacks any objective boundaries for what constitutes "substantially" airtight, a POSA is left to question the scope of this meaning.

157. In support of its position in the Litigation, I also understand that Patent Owner primarily relies on the prosecution history of an unrelated patent by the same inventor to argue that the term "inflatable body" includes a "substantially airtight" requirement. Ex. 1015, 20; *see also* Ex. 1016 (Ex. 6 to TWW's Opening Claim Construction Brief). As an initial matter, I understand that this evidence from an unrelated patent is of minimal relevance to the Board's claim construction inquiry.

158. Even if the Board considers it, however, Patent Owner argued that a substantially airtight structure is simply a structure that expands when filled with air or other gases. *See* Ex. 1016, at 3 ("A characteristic of an inflatable mattress that swells when filled with air or other gas is that ***it must be substantially airtight***." (emphasis added)). Therefore, adding "substantially airtight" as a requirement is redundant of the undisputed meaning of the term inflatable body and, as a result, unnecessarily adds ambiguity and confusion regarding the scope of the term.

B. <u>"fan"</u>

159. Based on the claims and specification, as used in the '394 Patent, a POSA would have understood the broadest reasonable interpretation of "fan" to be a device that alters air pressure through rotation.

1. *The '394 Patent Claims*

160. The claims confirm that a "fan" is a component that alters air pressure. The term "fan" appears in twelve claims. *See* Ex. 1001, Claims 1, 7-13, 15-16, and 22-23. These claims confirm that the fan is one component of the "fan and motor assembly," which is used for pumping air by altering the air pressure. *See, e.g.,* Ex. 1001, Claim 1 ("a fan and motor assembly for ***pumping air***" (emphasis added)); Claim 7 ("the air conduit is arranged to convey ***air pumped*** by the fan and motor assembly" (emphasis added)).

2. *The '394 Patent Specification*

161. The specification aligns with the claims and confirms that a "fan" is a component that alters air pressure. For example, the Abstract of the '394 Patent describes the "fan and motor assembly" as "***pumping air***." *Id.* at Abstract (emphasis added). In so doing, the fan and motor assembly can "inflat[e]" or "deflat[e]" an inflatable body. *Id.*; *see also id.* 4:25-26, 34-35 (describing the "inflatable product" as being "inflated by the fan and motor 33" and "evacuated by the fan and motor 33"); *id*. at 7:7-19; 8:2-13.

162. The specification further clarifies that a "fan" is any device that alters pressure through rotation. Referring to Figure 10B, below, for example, the '394 Patent taught an inflatable umbrella embodiment with a "fan (***air pressure rotator***) 155 [outlined orange] eccentrically received in the reservoir 151, and a motor 154 provided outside the reservoir 151 to ***rotate the fan 155***." *Id.* at 8:3-6 (emphases

added). In this embodiment, the '394 Patent taught that the "fan assembly generates sufficient air pressure" that "air is pumped into the reservoir 151 through the air intake 152 and then pumped out through the air outlet 153" to "inflate the umbrella." *Id.* at 8:8-13.

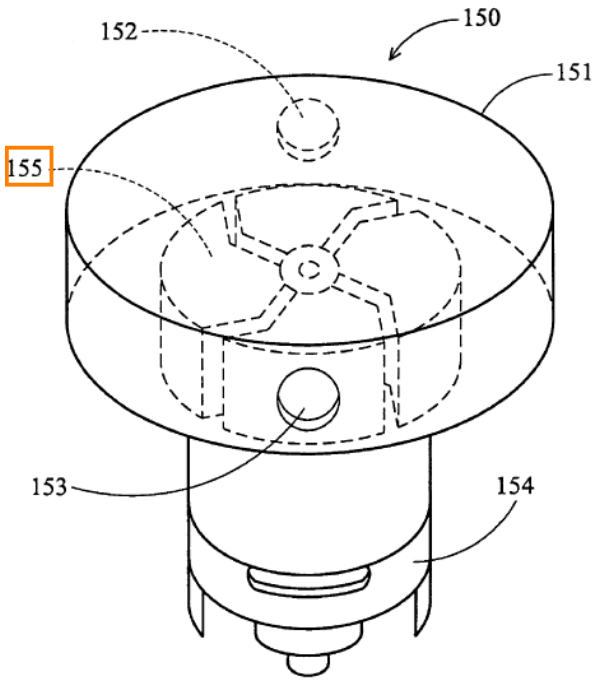

FIG. 10B

163. Referring to Figure 3B, below, in another embodiment the '394 Patent taught a fan (green) in the form of an impeller. In this embodiment, the '394 Patent describes the motor and fan 33 (green), together, inflating and deflating the inflatable product through rotation of the impeller. *Id.* at 4:13-38; *see also id.* at 6:63-7:19 (describing a fan and motor 62 in another embodiment as "rotat[ing] in a

normal direction" to inflate an inflatable product and "rotat[ing] in a reverse direction" to deflate an inflatable product).

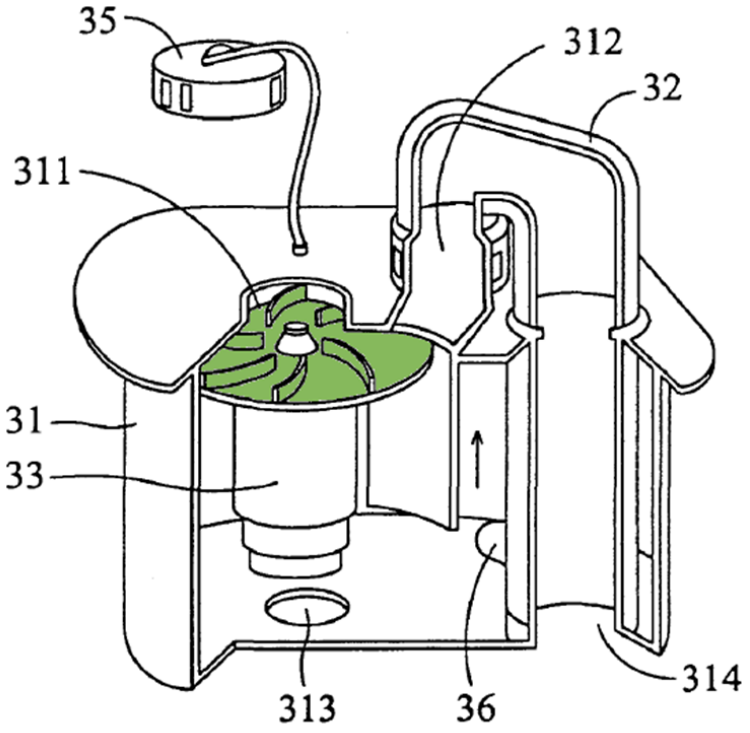

FIG. 3B

164. Therefore, based on the claims and specification, as used in the '394 Patent, a POSA would have understood the broadest reasonable interpretation of "fan" to be a device that alters air pressure through rotation.

3. *Extrinsic Evidence*

165. Extrinsic evidence in the form of a contemporaneous dictionary definition is consistent with my proposed construction, as it confirms that a "fan" is simply a component that alters air pressure. *See* WEBSTER'S NEW WORLD

DICTIONARY AND THESAURUS (Ex. 1061, at 3) (defining "fan" as "any device used to set up a current of air for ventilating or cooling").

C. <u>"pipe"</u>

166. Based on the claims, specification, and relevant extrinsic evidence, as used in the '394 Patent, a POSA would have understood the broadest reasonable interpretation of "pipe" to be a hollow body for conveying air or other gases.

1. *The '394 Patent Claims*

167. The claims confirm that a "pipe" is a hollow body structure that conveys air or other gases. *See* Ex. 1001, Claims 4- 6, 13, 19, 20, and 21. For example, claim 19, which depends from claim 16, recites a "pipe" that "convey[s] air pumped by the fan and motor assembly." *See id.* at Claims 16, 19; *see also id.*, Claim 13 (reciting that "on activation of the fan, air is pumped … through the switching pipe"). The claims include no further requirement—e.g., regarding the pipe's size, shape, etc.—of the term pipe.

2. *The '394 Patent Specification*

168. The specification aligns with the claims and confirms that "pipe" is merely used to describe a hollow body for conveying air or other gases:

- "During inflation … air flows through the vent 239, main pipe 238, side pipe 236 and air intake 221, and out from the air outlet 222" ('394 Patent, 3:61-67); and

- "Air flows through the air intake 314, the switching pipe 32 and the air intake 311, and into the housing 31." ('394 Patent, 4:35-38);

169. The specification further confirms that the term pipe is not limited to a structure of a particular size or shape. Instead, and referring to Figures 2C (at left) and 3A (at right), below, the '394 Patent discloses multiple different configurations of a "pipe" (reference numerals 236-38 and 32, highlighted orange).

Fig. 2C	Fig. 3A
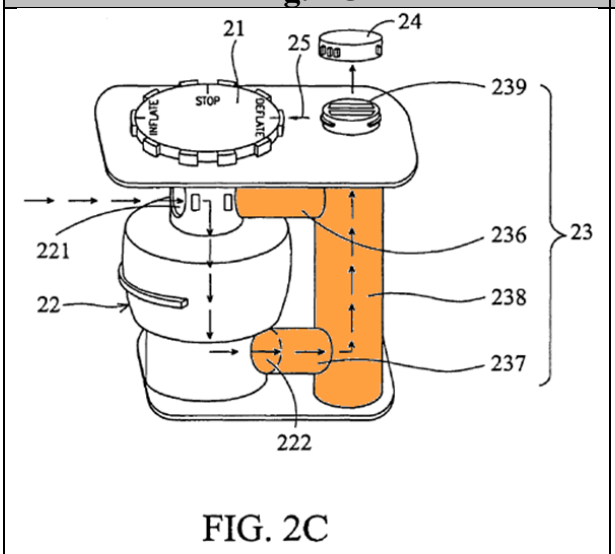 FIG. 2C	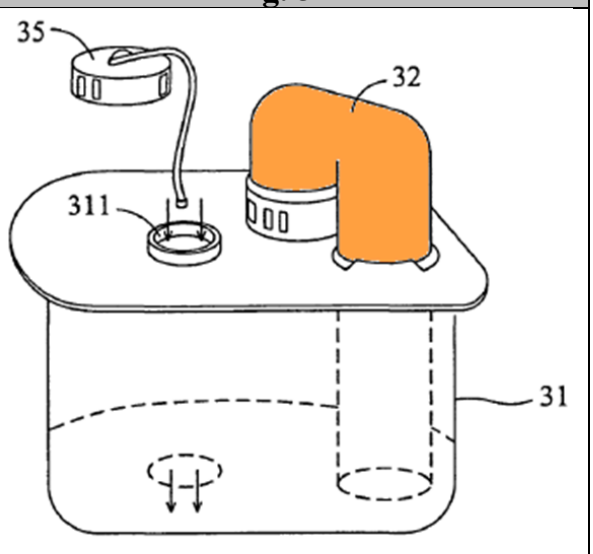 FIG. 3A

3. *The Relevant Extrinsic Evidence*

170. Relevant extrinsic evidence in the form of dictionary definitions is consistent with my proposed construction. Specifically, these dictionary definitions confirm that pipe is not limited to a structure of a particular size or shape. *See, e.g.,* Ex. 1062, at 7 (Patent Owner citing an online dictionary defining "pipe" as "a

long tube or ***hollow body*** for conducting a liquid, gas, or finely divided solid or for structural purposes" (emphasis added)).

VIII. IDENTIFICATION OF THE CHALLENGES

171. In my opinion, the Challenged Claims are unpatentable on at least the following four grounds:

Ground	Claims	Basis	References
1	Challenged Claims	§ 103	Wu + Chaffee
2	Challenged Claims	§ 103	Wu + Goldsmith
3	Challenged Claims	§ 103	Wu + Parienti
4	Challenged Claims	§ 103	Wu + Goldsmith + Chaffee

A. Ground 1[36]

172. The Challenged Claims are unpatentable as obvious under § 103 in view of Wu in combination with Chaffee.

173. In the context of the design features and their corresponding design options for achieving those features—which, as I described above, a POSA would have understood and would have been focusing on as of the Priority Date (*see* § VI.B, above)—the Challenged Claims generally cover: (1) a motorized pump; (2) a

[36] For each ground that I address in this declaration, I include un-enumerated headings including the specific claim language (in italics and bold) relevant to the analysis that immediately follows to provide context for every portion of my opinion.

pump layout having some of the pump components in the housing (e.g. claims 1-11, 16-22) or all of the components in the housing (e.g., claims 12 and 23); (3) a pump location that is built into the inflatable body; and (4) a power inflate/power deflate, Uni-Directional Pump Assembly. *See* Table 2, above.

174. As I briefly discussed above, and as I will discuss in more detail below, Wu disclosed several of the claimed features (*see* green highlighting) but not all (*see* red highlighting). *Compare* Table 2 *with* Table 3-A, above.

Design Feature	Design Option #1	Design Option #2	Design Option #3
1. Pump power	Manual	Motorized	--
2. Pump layout	Components uncontained	Components partially contained in housing	Components contained in housing
3. Pump location	External to inflatable body	Built into inflatable body	Built into inflatable body and recessed
4. Inflatable product flow control	Power inflate, vent deflate	Power inflate, power deflate via Reversible Pump Assembly	Power inflate, power deflate via Uni-directional Pump Assembly

Comparison of Table 2 with Table 3-A

175. However, as I explain in more detail, below, a POSA would have found these missing claimed designs to be supplied by Chaffee, such that, in combination, Wu and Chaffee disclose all of the claimed features:

Design Feature	Design Option #1	Design Option #2	Design Option #3
1. Pump power	Manual	Motorized	--

2. Pump layout	Components uncontained	Components partially contained in housing	Components contained in housing
3. Pump location	External to inflatable body	Built into inflatable body[37]	Built into inflatable body and recessed
4. Inflatable product flow control	Power inflate, vent deflate	Power inflate, power deflate via Reversible Pump Assembly	Power inflate, power deflate via Uni-directional Pump Assembly

Comparison of Table 2 with Tables 3-A and 3-B

176. Furthermore, as I explain in more detail below, a POSA would have been motivated by several of the design factors that were well-known as of the Priority Date (*see* § VI.B, above) to combine the teachings of Chaffee with Wu, including, for example, because the resulting combination would have: increased efficiency (of time and labor), increased spatial efficiency, enhanced durability, and decreased manufacturing costs.

1. <u>Claim 1</u>

An inflatable product including:

177. This is the preamble of claim 1 of the Challenged Patent. A POSA would have understood this preamble as merely providing that the intended use of

[37] As I explained above, and will explain in more detail, below, Chaffee disclosed a pump design built into an inflatable body and recessed. However, this design also covers a design that is merely built into an inflatable body, as recited in the Challenged Claims.

the purported invention was in an inflatable product. A POSA would ***not*** have viewed this preamble as breathing life or further meaning into claim 1. As a result, a POSA would not have understood the preamble of claim 1 to constitute a limitation.

178. Even if the Board finds the preamble to be a limitation, however, Wu disclosed an inflatable product in the form of an air mattress. Specifically, and referring to Figure 1, below, Wu disclosed a system 10 for "supplying air and controlling the flow of air into and out of the chambers of a patient supporting ***air mattress***" 400 (orange). Wu (Ex. 1005), Abstract (emphasis added); *see also id.* at 2:44-62; 4:37-47. *See also* Wu '925 Application (Ex. 1066), 4:1-16; 6:30-31-7:1-6; 15:5-7.

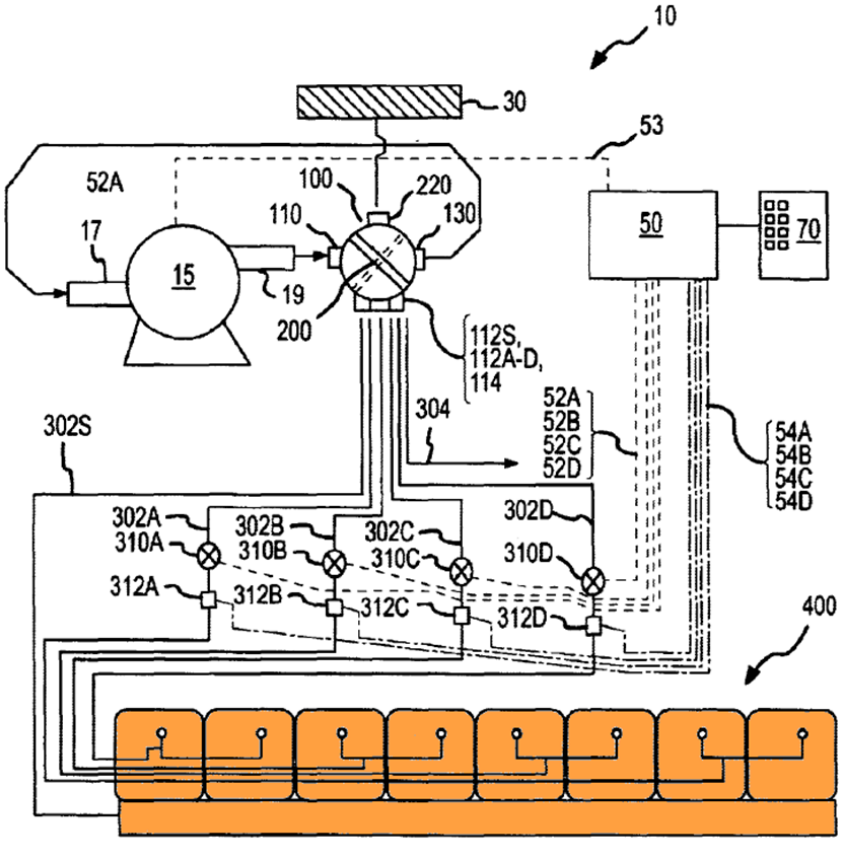

FIG.1

Ex. 1005, Fig. 1.

179. A POSA would have understood air mattress 400 to be an inflatable product, as Wu consistently describes air mattress 400 as being "inflated" by system 10. For example, the Abstract of Wu states that the invention includes "a control unit" for controlling "the amount by which the chambers of the air mattress are ***inflated***." Wu, Abstract (emphasis added); *see also id.* at 3:10-14; 4:30-43. *See also* Wu '925 Application (Ex. 1066), 4:28-31; 6:25-31-7:1-6; 15:12-14.

an inflatable body;

180. Wu disclosed an inflatable body in the form of an air mattress 400. *See* ¶¶ 143-58, above. Specifically, and referring again to Figure 1, below, Wu disclosed a system 10 for "supplying air and controlling the flow of air into and out of the chambers of a patient supporting ***air mattress***" 400 (orange). Wu, Abstract (emphasis added); *see also id.* at 2:44-62; 4:37-47. *See also* Wu '925 Application (Ex. 1066), 4:4-16; 6:30-31-7:1-3; 15: 5-7.

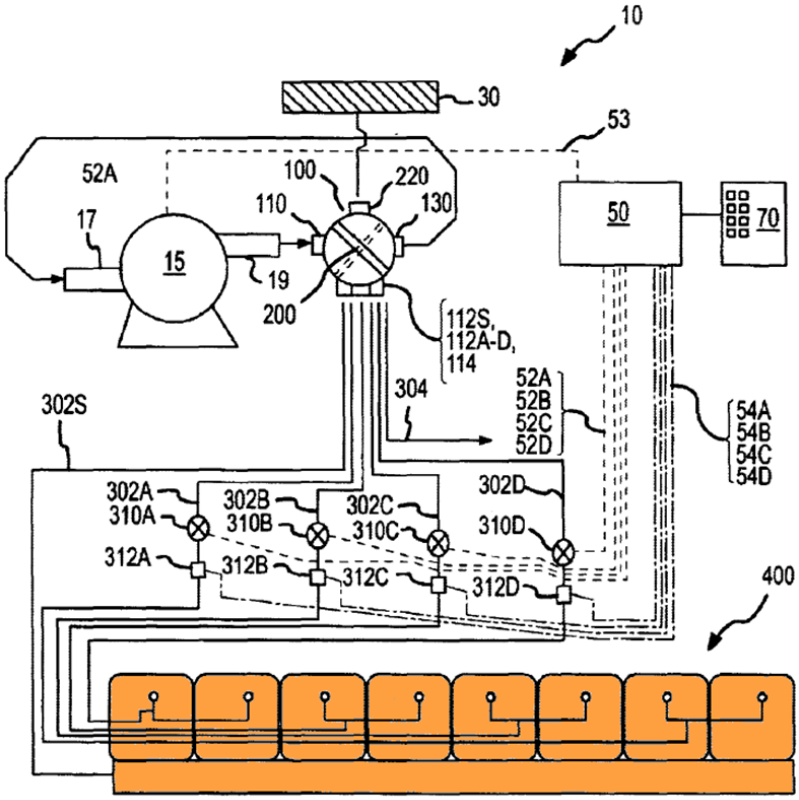

FIG.1

181. Wu described air mattress 400 shown in Figure 1 as "a type of mattress having transverse air chambers arranged in zones[.]" Wu, 4:1-2. A POSA would have understood this multi-chamber air mattress 400 to be an inflatable body, as Wu consistently describes air mattress 400 as being a body that is "inflated" by system 10. For example, the Abstract of Wu states that the invention includes "a control unit" for controlling "the amount by which the chambers of the air mattress are ***inflated***." Wu, Abstract (emphasis added); *see also id.* at 3:10-13; 4:30-43. Wu also describes system 10 as being programmable to supply "targeted pressure ranges [that] would be constantly changing as sets of air chambers are ***inflated*** and ***deflated***." Wu, 4:14-36 (emphases added). *See also* Wu '925 Application (Ex. 1066), 4:28-30; 6:6-7, 15-29; 15:12-14.

182. Air mattress 400 also includes "a large number of small holes in its upper surfaces to permit air to constantly circulate around a supported patient." Wu, 2:60-62; *see also* Wu '925 Application (Ex. 1066), 4:15-16.

183. To the extent the Board finds that "inflatable body" has a substantially airtight requirement (which, in my opinion, would be contrary to a POSA's understanding of the term), Wu provides an alternative air mattress teaching that would satisfy this narrower construction, as Wu states that "system 10 is highly versatile and can be used to supply air to various types of air mattresses such as a rotational therapy mattress, a pulsating mattress or ***constant pressure mattress***."

Wu, 4:44-47 (emphasis added). A POSA would have understood a "constant pressure mattress" to be a single-chamber structure that is substantially airtight. *See also* Wu '925 Application (Ex. 1066), 7:4-6.

184. To the extent the Board finds that this "constant pressure mattress" does not constitute an inflatable body that is substantially airtight, a POSA would have found this to be obvious in view of Chaffee's "***substantially fluid impermeable*** bladder 20" (Chaffee (Ex. 1006), 3:5 (emphasis added); *see also id.* at 3:8-10; 3:32-42; 3:64; 4:23-26), and Wu's teaching that "system 10 is ***highly versatile*** and can be used to supply air to ***various types of air mattresses***" (Wu (Ex. 1005), 4:44-47 (emphasis added)). *See also* Wu '925 Application (Ex. 1066), 7:4-6. Therefore, regardless of the Board's construction, Wu disclosed an "inflatable body," or a POSA would have found it to be obvious in view of Chaffee.

a fan and motor assembly for pumping air;

185. Wu disclosed a fan and motor assembly for pumping air. Specifically, Wu disclosed "an ***electric motor*** powered ***variable speed blower***" for "supplying air and controlling the flow of air into and out of the chambers of a patient supporting air mattress." Wu (Ex. 1005), Abstract (emphases added); *see also* Wu '925 Application (Ex. 1066), Abstract, 15:5-7.

186. Wu describes this variable speed blower 15 as "a centrifugal ***fan*** type blower." Wu, 2:56-57 (emphasis added). Referring to Figure 1, below, blower 15

(orange) is schematically shown as part of system 10, although the electric motor is not shown. Wu, 2:53-55; *see also* Wu '925 Application (Ex. 1066), 4:10-11,13

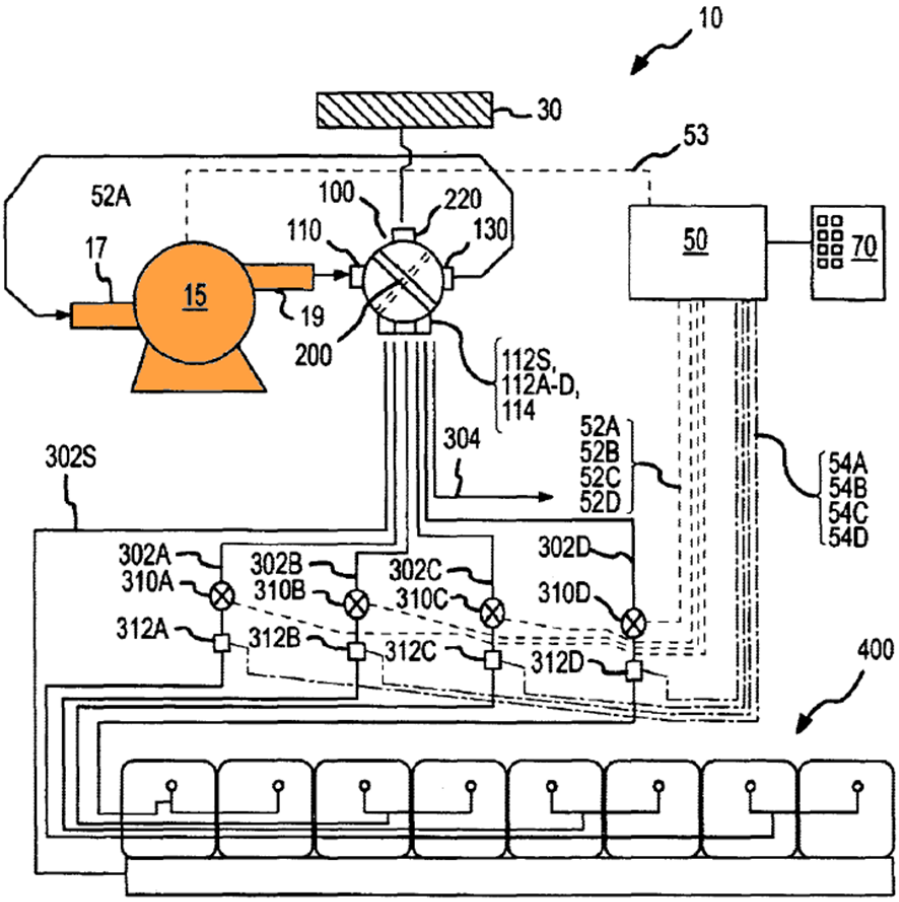

FIG.1

a housing built into the inflatable body, the housing having an interior region; and

187. This limitation contains two features: (1) a housing having an interior region; and (2) that housing being built into the inflatable body.

188. As I explain in more detail below, as of the Priority Date, a POSA would have been motivated by the teachings of Chaffee to incorporate the pump components of system 10 of Wu into a housing and build that housing into the inflatable body.[38] In particular, as I explain below, a POSA would have recognized several benefits of using a built-in housing structure like that of Chaffee to contain the pump components of system 10 of Wu, such as blower 15 and rotary valve 100.

189. ***Housing having an interior region.*** Chaffee disclosed a housing having an interior region. Referring to Figure 3, below, Chaffee disclosed "a device capable of regulating fluid flow" for inflatable devices, referred to as fluid controller 80. Chaffee (Ex. 1006), 2:54-55.

[38] Although Wu disclosed that rotary valve 100 included a housing 101 (*see* Wu (Ex. 1005), Figs. 1-2), this housing 101 did not contain blower 15. As I explain in the rest of this section, a POSA would have been motivated to dispose Wu's rotary valve 100 ***and*** blower 15 inside of a housing, like Chaffee's. *See also* Wu '925 Application (Ex. 1066), Figs. 1-2.

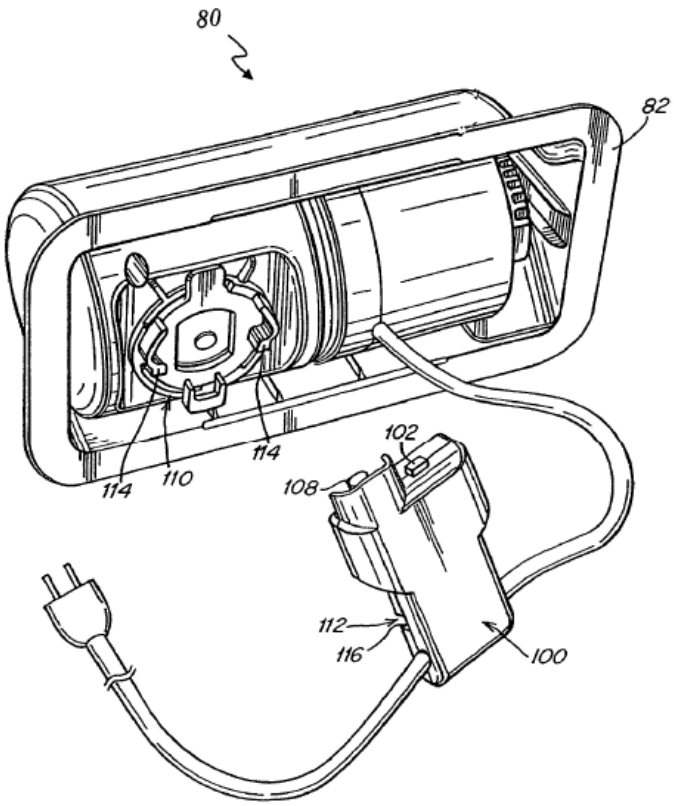

Fig. 3

Ex. 1006, Fig. 3.

190. Chaffee described fluid controller 80 as "includ[ing] various components, such as a ***housing***, valve, fluid conduit, pump, and the like." Chaffee (Ex. 1006), 2:55-56 (emphasis added). Specifically, and referring to Figure 5, below, Chaffee disclosed "a housing 90 [orange] that surrounds the inner workings of the pump [81]." Chaffee 4:18-19. As I explain in more detail, below, Chaffee describes this housing 90 as including a flange 82 (orange) and flange wall 83 (also in orange). *See* ¶¶ 200-01, below. Therefore, to be clear, I also consider flange 82

and flange wall 83 to be part of the housing 90— collectively, I consider these components to constitute the claimed "housing." *See id*.

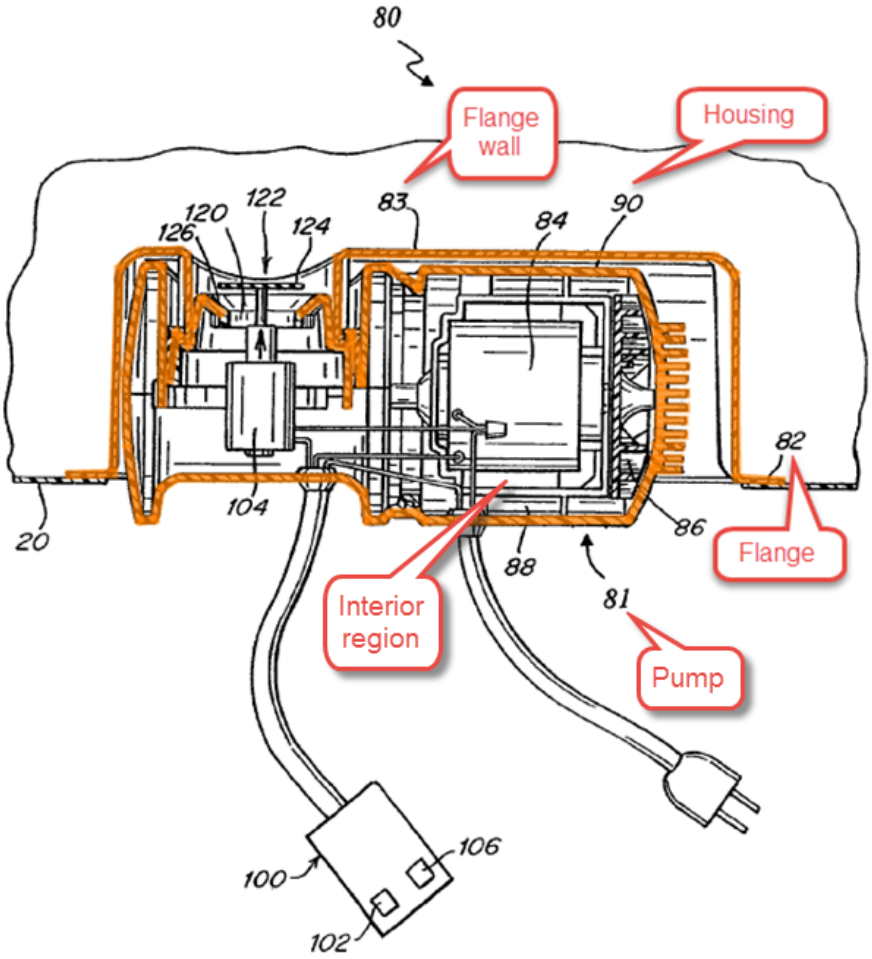

Fig. 5

Ex. 1006, Fig. 5.

191. As shown, above, the housing includes an interior region. *See also id.* at 4:15-17 (describing a conduit 88 that forms "between motor 84 and housing

90”); 4:19-22 (describing the housing as “protect[ing] the inner workings of the pump”).

192. As of the Priority Date, a POSA would have been motivated to implement the housing disclosed in Chaffee with Wu such that the pump components of system 10 of Wu—including, specifically, rotary valve 100 (a directional control valve) and electric motor-driven blower 15—were disposed inside the housing for at least the reasons given below. In addition, a POSA would have known how to modify Chaffee’s housing to accommodate these Wu pump components.

193. First, a POSA would have understood that using Chaffee’s housing would have provided better **spatial efficiency**, which, as I explained above (*see* § VI.B, above),[39] is one of the five key design factors a POSA would have considered. Specifically, Chaffee’s housing would have provided a more compact design of the pump components of Wu’s system 10 because, as Chaffee explained, housing would have “surround[ed] the inner workings” of the pump components of

[39] *See also* Grant (Ex. 1031), 6:29-36; Bock (Ex. 1032), 1:61-65, 3:19-21; Chaffee (Ex. 1006), 1:19, 4:50-62; Scott (Ex. 1012), 1:40-56; Miller (Ex. 1013), 2:40-45, 3:31-33; de Vries (Ex. 1040), at 15; Rand 986 (Ex. 1029), 2:8-11.

Wu's system 10, like rotary valve 100 and blower 15. Chaffee (Ex. 1006), 4:18-19.

194. Second, a POSA would have been motivated to implement Chaffee's housing with the pump components of Wu's system 10 because it would have provided better **durability**, which, as I explained above (*see* § VI.B, above),[40] is one of the five key design factors a POSA would have considered. Specifically, as Chaffee explained, housing served "to ***protect*** the inner workings of the pump." Chaffee, 4:20 (emphasis added). Thus, a housing implemented with the pump components of Wu's system 10 would have better protected rotary valve 100 and blower 15 from damage or other harm, thus making it a more durable, longer-lasting structure.

195. Third, a POSA would have recognized that containing Wu's pump components in a housing would have decreased manufacturing and logistics **costs** which, as I explained above (*see* § VI.B, above), is one of the five key design factors a POSA would have considered. Specifically, unitizing Wu's pump components in a housing, like Chaffee's housing, would have reduced the part count of the air pump assembly, as the air pump assembly components (such as,

[40] *See also* Hargin (Ex. 1023), 1:53-62, 2:128-31, 3:10-22, Figs. 1-2, Chaffee (Ex. 1006), 4:19-22, Pinkwater (Ex. 1054), 1:29-31.

blower 15 and rotary valve 100) would be unitized in Chaffee's housing. This would have simplified handling of Wu's air pump assembly during manufacturing and further simplified interfacing the air pump assembly with the air mattress during manufacturing, both of which would have resulted in reduced manufacturing costs.

196. Fourth, Wu is silent regarding how the pump components of Wu's system 10 (such as rotary valve 100 and blower 15) structurally interface with one another and the air mattress 400. As a result, a POSA would have looked to known options for providing that information in order to create a structurally sound design of the pump components of Wu's system 10; containing these components (such as rotary valve 100 and blower 15) in a compact housing like Chaffee's would have been one of a limited number of options, especially given the desire for spatial efficiency. *See* ¶¶ 86-90, above.

197. Fifth, a POSA would have appreciated that containing the pump components of Wu's system 10, such as blower 15 and rotary valve 100, in Chaffee's housing was a well-known option from prior art pump designs that yielded nothing more than predictable results—an air pump assembly with components contained in a housing. *See* ¶¶ 86-90, above; *see also* U.S. Patent No.

6,832,629 to Wu (Ex. 1071), Fig. 1 (showing the pump components of Wu contained within a housing).[41]

198. ***Housing built into the inflatable body.*** Chaffee's housing is built into its inflatable body. Specifically, and referring to Figures 2 and 5, below, Chaffee disclosed that fluid controller 80 [orange] is built into and recessed in inflatable bladder 20 [blue].

[41] *See also* Walker (Ex. 1010), Figs. 20-31; Mogaki (Ex. 1030), Fig. 3B and 7; Grant (Ex. 1031), Figs. 1-7, 11; Fujimoto (Ex. 1045), Figs. 1, 4-6; Gilroy (Ex. 1037), Figs. 8-9.

Figure 2	Figure 5
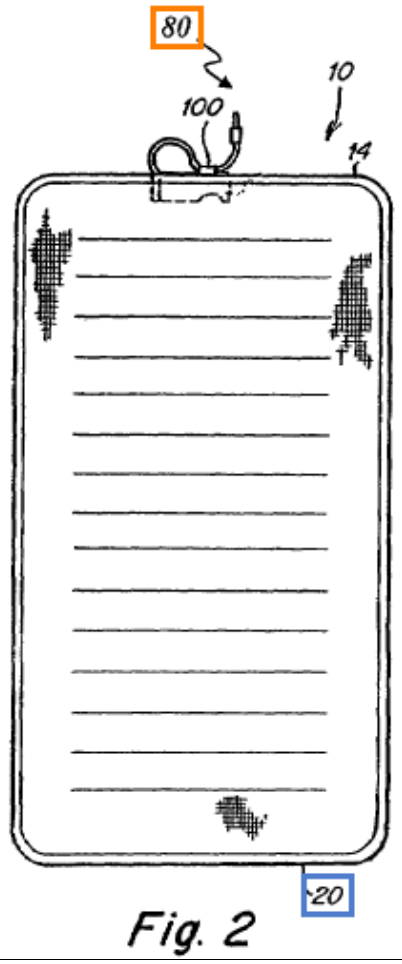 Fig. 2	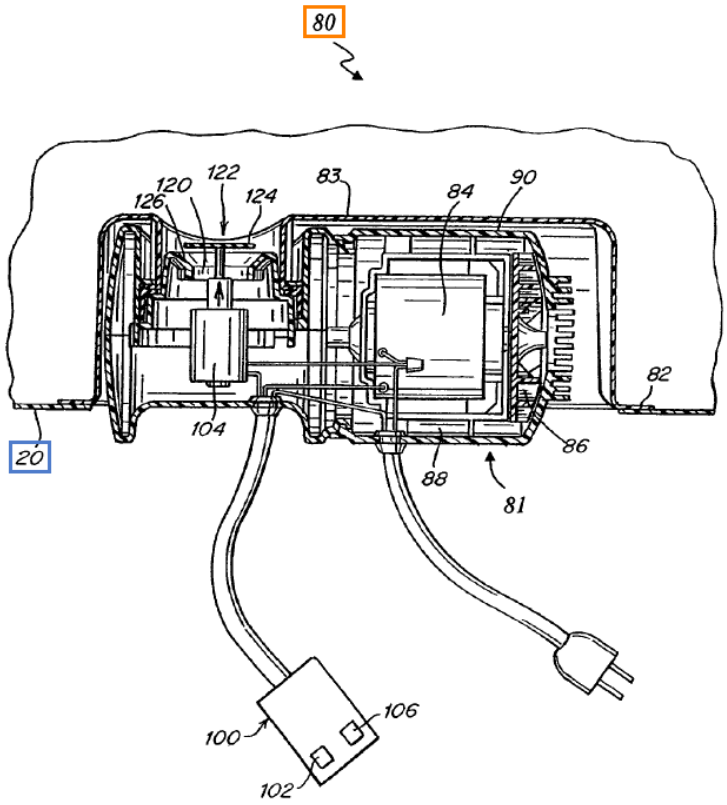 Fig. 5

199. In fact, the point of Chaffee's design was to improve upon the prior art by building the fluid controller in the inflatable body. *See* Chaffee, Abstract (referring to its pump as being "at least partially positioned within the bladder" and another embodiment where the fluid controller is combined with an inflatable bladder such that "the exterior profile of the fluid controller and inflated inflatable device in combination is essentially the same as the exterior profile of the inflated inflatable device."); *see also id.*, at 1:51–62; *compare id.* Fig. 1 *with id.* Fig. 2.

200. Referring to Figure 5, below, Chaffee described housing 90 (orange) as "provid[ing] [the] connection between fluid controller 80 and bladder 20." Chaffee (Ex. 1006), 4:21-22. Specifically, Chaffee states that "fluid controller 80 may include a portion adapted to connect to bladder 20, such as a flange 82 [orange]" (which includes a flange wall 83 (also in orange), *id.* at 5:9-11)) that "extend[s] from housing 90." *Id.*, 5:5-8; *see also id.* at 7:37-38 ("The inflatable device of claim 4, wherein the housing comprises a flange impermeably connected to the bladder."); *see also* ¶¶ 116-18, 189-91, above. In the figure, below, I have indicated the connection point between the flange 82 (orange) (which includes a wall 83; *see* Ex. 1006 at 5:9-11) of housing 90 and bladder 20 with blue circles.

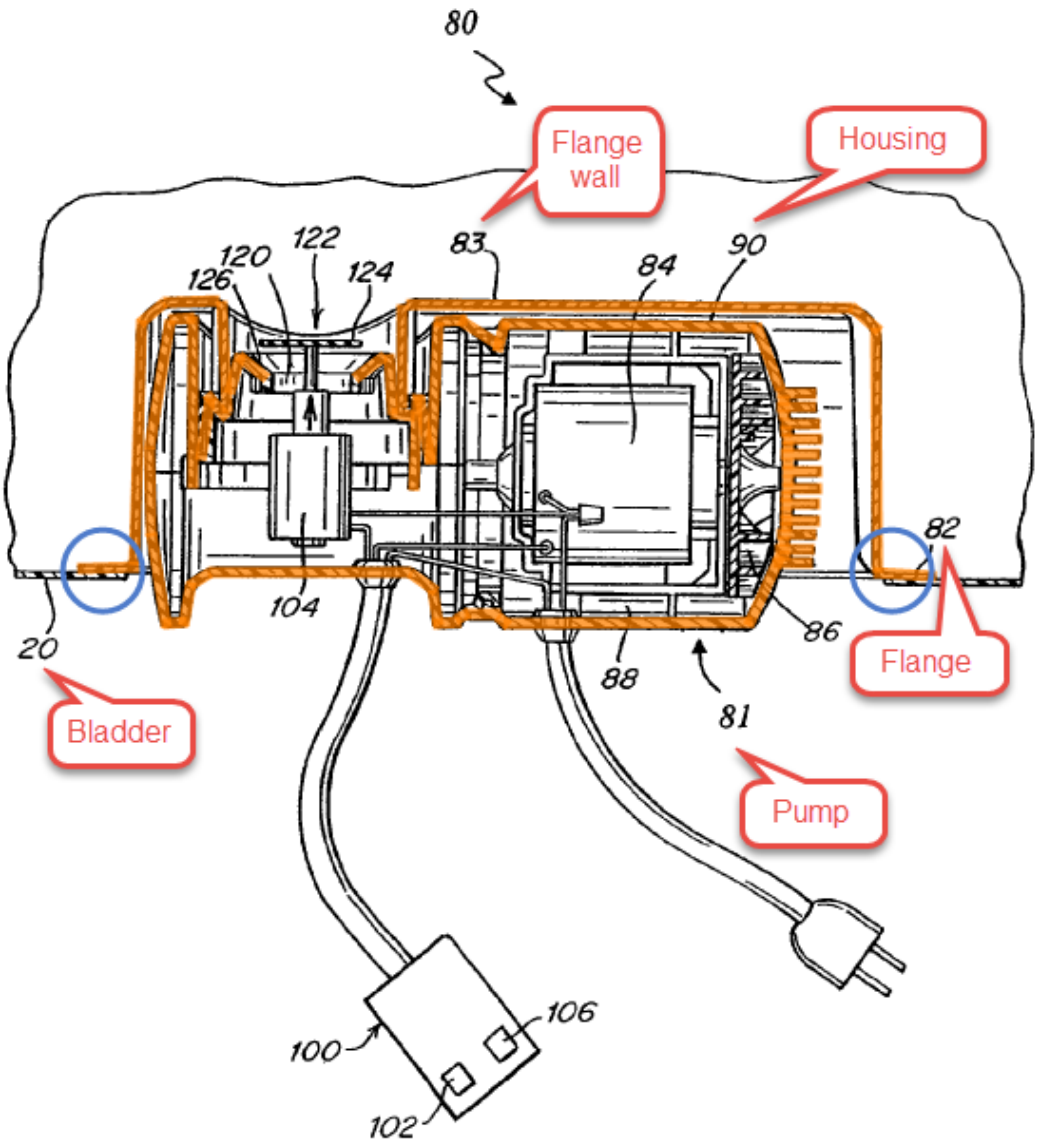

Fig. 5

Ex. 1006, Fig. 5.

201. Chaffee described this connection between housing and bladder as being accomplished, for example, by "adhesive or heat seal" (*id.* at 4:67-5:2, 5:26). A POSA would have understood this "adhesive or heat seal" connection to be built

in connection between flange 82 (which is part of housing 90; *see id.* at 5:7-8) and bladder 20. To be clear, I understand that in the Litigation, the district court construed the phrase "built in" to have its plain and ordinary meaning, and explained that something is "built in" if it "is not readily removed without changing its character" or is "integrated and not detachable." Ex. 1072 at 23. Something that is, for example, "glued or welded" to another structure is "built in," according to the district court. *Id.* at 23-24. I have applied the plain and ordinary meaning of "built in" throughout this Declaration. Regardless of whether the Board adopts the district court's construction or an even broader construction under the BRI standard, Chaffee satisfies the "built in" limitation of the Challenged Claims.

202. In short, Chaffee disclosed a housing 90 (which included a flange 82 and flange wall 83) (which, collectively, I will now simply refer to as the "Housing") (the housing) with an interior region that was built into an inflatable body.

203. In view of this disclosure in Chaffee, a POSA would have been further motivated to contain the pump components of system 10 of Wu, such as blower 15 and rotary valve 100, in a housing, such that the housing was built into Wu's inflatable body (e.g., air mattress 400) as taught by Chaffee for at least the following reasons. And, to the extent the Board finds that Wu's multi-chamber air

mattress 400 constitutes the inflatable body (rather than the single-chamber constant pressure mattress I described above), a POSA would have known how to connect the various 112 supply ports to those chambers in a built-in design.

204. First, a POSA already had a reason to combine the pump components of Wu's system 10 within a housing build into Wu's inflatable body (in a manner similar to Chaffee's Housing) as taught by Chaffee, as I described above. *See* ¶¶ 192-97, above. The result would have been the pump components of Wu's system 10 contained in a housing similar to that of Chaffee's Housing, which Chaffee already taught was built into an inflatable body. *See* ¶¶ 198-202, above.

205. Second, a POSA would have recognized the built in design to be more **time- and labor-efficient**—which, as I explained above (*see* § VI.B, above), is one of the five key design factors a POSA would have considered—as it enhanced user convenience. Specifically, it was well-known at the time that built-in designs, like that disclosed in Chaffee, had been touted as eliminating the need for "owners to carry the pump in order to inflate the air mattress," Chen (Ex. 1052), 1:38-40. As one prior art reference put it, built-in pump designs meant that users had "[n]o more need to get an air pump." Parienti (Ex. 1008), 1:25-26; *see also id.*at Fig. 1; Chaffee (Ex. 1006) 1:19 (explaining that "portability is desired"); Goldsmith (Ex. 1007), Fig. 6, 4:1-15 (explaining that "no outside unit is necessary" with a built-in design); n.17, above.

206. Third, a POSA would have understood that not only would placing Wu's pump components inside a housing lead to better ***spatial efficiency***, increased ***durability***, and improved ***costs*** and marketability for the reasons I explained above (*see* ¶¶ 193-95, above), but also that these same key design factors would have been enhanced by then incorporating that housing inside the inflatable body.

207. Regarding better **spatial efficiency**, as was well-known at the time (*see* § VI.B, above), this more compact design would have "reduc[ed] the opportunity for" the pump components of Wu's system 10 "to impact or interfere with the use of" air mattress 400. *See* Chaffee (Ex. 1006), 4:50-56. As a result, air mattress 400 would have, for example, "fit into a standard sized bed frame." *See id.*, 4:56-59; *see also* Miller (Ex. 1013), 2:40-52 (describing an air pump "disposed inside the air cell" as "provid[ing] a ***compact*** design . . . to ***reduce space requirements***" (emphases added)).

208. Regarding increased **durability**, as was also well-known at the time (*see* § VI.B, above), POSAs recognized that built-in designs would protect the pump and its components "from accidental injury, or separation from the mattress[.]" Hargin (Ex. 1023), Fig. 1, 1:9-14, 2:123-132, 3:18-22; *see also* Pinkwater (Ex. 1054), 1:29-31 (describing built-in air pumps as being "resistant to chemical and physical attack, especially to moisture and oxidation"). Further, such

a design modification would have improved durability during manufacturing, as the housing would have protected the components during assembly (as described above).

209. Regarding improved ***cost*** and marketability of the system while retaining desired functionality and quality (*see* § VI.B, above), POSAs understood that built-in designs avoided the increased costs and lower desirability associated with separate pump systems, especially because it meant a user would not have to replace lost or misplaced pumps. *See, e.g.*, Chen (Ex. 1052), 1:34-38; ¶ 106, above.

210. Fourth, because Wu is silent about how the pump components of Wu's system 10 structurally interfaced with air mattress 400, a POSA would have been motivated to implement the pump components of Wu's system 10 in air mattress 400, as taught by Chaffee with a similar air pump means 80. That is, Wu provides no teaching about whether the pump components of Wu's system 10 are located outside of air mattress 400, are mounted to air mattress 400, or are otherwise structured. Instead, Wu merely provides a general drawing in Figure 1 (reproduced below) that schematically depicts the operation of the pump components of Wu's system 10 and air mattress 400. Wu (Ex. 1005), Figure 1; *see also* Wu '925 Application (Ex. 1066), Figure 1.

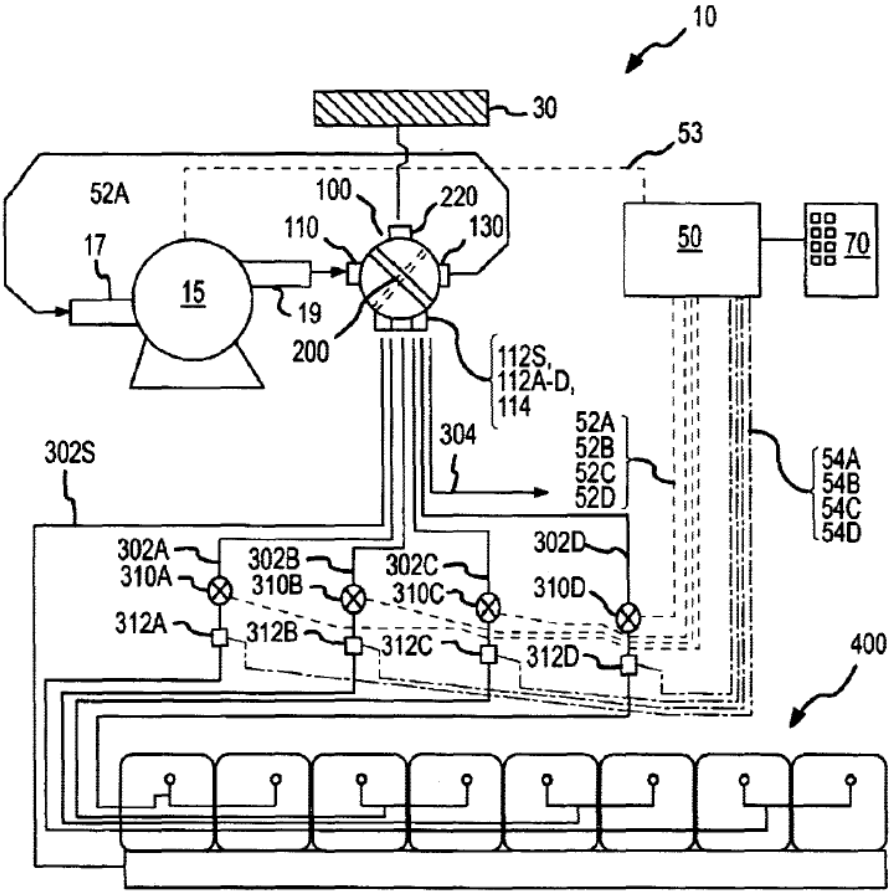

FIG.1

Ex. 1005, Fig. 1.

211. As a result, a POSA starting with Wu would have been motivated to look to other references regarding how to structurally implement the pump components of Wu's system 10 with air mattress 400. The built-in Housing design of Chaffee would have provided one such known interface design, and implementing it with the pump components of Wu's system 10 would have been well within a POSA's technical grasp. *See* ¶¶ 51-54, 91-100, above.

212. Fifth, as also discussed above regarding the housing having an interior region, a POSA would have recognized this design modification to be nothing more than an obvious combination of familiar elements using known methods to achieve a predictable result. Specifically, a POSA knew that using Chaffee's teaching of a Housing to build Wu's pump components into air mattress 400 was a well-known design option and would have predictably yielded an air mattress with a built-in pump. *See* ¶¶ 51-54, 91-100, above.

213. In short, Chaffee teaches a Housing having an interior region that is built-into an air mattress 20 through flange 82. In light of this disclosure, a POSA would have found it obvious to contain Wu's rotary valve 100 and blower 15 in a housing built into air mattress 400 as taught by Chaffee for at least all of the reasons I provided above.

an air conduit disposed at least in part in the housing, the air conduit being movable between a first position and a second position while remaining disposed at least in part in the housing, the fan and motor inflating the inflatable body when the air conduit is in the first position, and deflating the inflatable body when the air conduit is in the second position;

214. This limitation contains three features: (1) a movable air conduit that is disposed at least in part in the housing; (2) the air conduit is movable to a first position in which the fan and motor inflate the inflatable body while the conduit remains disposed at least in part in the housing; and (3) the air conduit is movable to a second position in which the fan and motor deflate the inflatable body while

the conduit remains disposed at least in part in the housing. Wu in combination with Chaffee disclosed all three of these features.

215. ***Movable air conduit at least partially disposed in housing.*** As I briefly explained above, and referring to Figure 2, below, Wu disclosed a Uni-directional Pump Assembly, including a rotary valve 100 (a 4/2 directional control valve) comprised of a moveable gate member 200 (the air conduit) (orange) and a valve housing 101, for controlling inflation and deflation of an air mattress 400. *See* ¶¶ 107-09, above; *see also* Wu (Ex. 1005), 2:3-8 (describing rotary valve 100, including gate member 200, as "direct[ing] the flow of air from the blower to the chambers of the air mattress in a pressurizing mode or route the flow of air from the air mattress into the intake of the blower in a vacuum mode in which the air mattress is rapidly deflated."); *id.* at 3:4-6 (describing gate member 200 as having "a first position for directing air flow in a pressurizing mode."); *see also* Exs. 1068, 1069, 1070. *See also* Wu '925 Application (Ex. 1066), 3:4-7; 4:23-24.

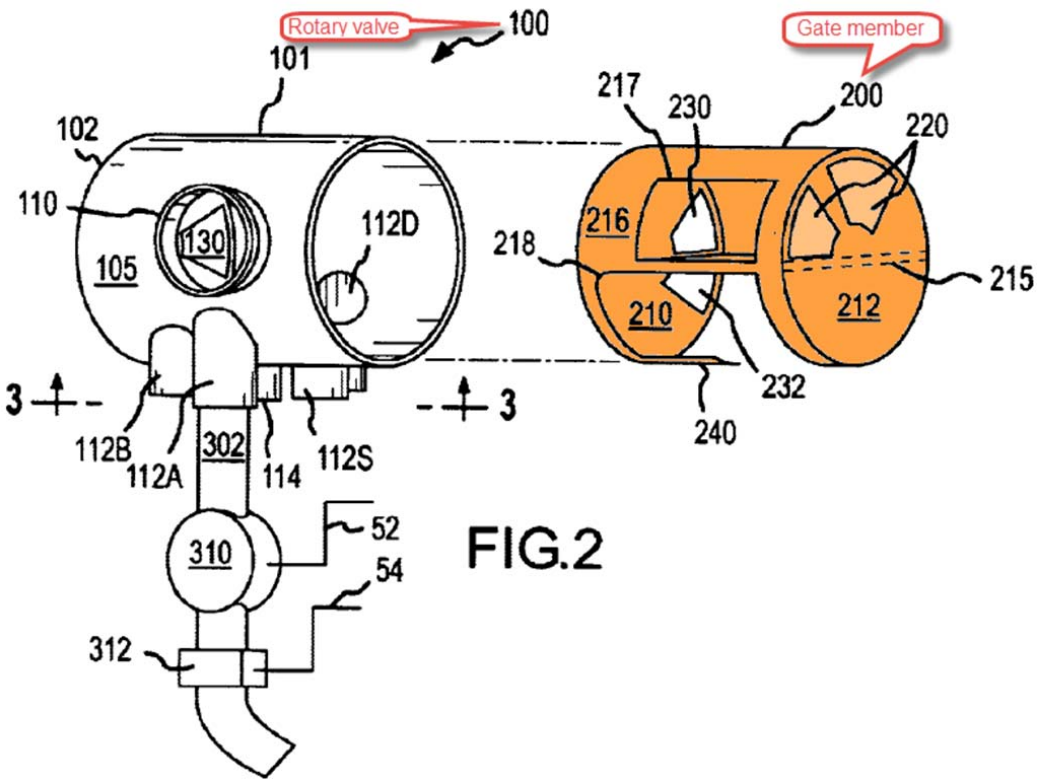

FIG.2

Ex. 1005, Fig. 2.

216. As I explained above, in combination with Chaffee, Wu's rotary valve 100, which includes gate member 200, would be contained in the housing, such as Chaffee's Housing. *See* ¶¶ 189-213, above. Thus, in combination with Chaffee, Wu's gate member 200 (the air conduit) is disposed in the housing.

217. ***Movable air conduit occupying a first position during inflation while at least partially disposed within the housing.*** Wu also disclosed that this gate member 200 (the air conduit) has a first position in which the fan and motor 15 inflate air mattress 400 (the inflatable body). And as I explained above (*see* ¶¶ 215-16), Wu in combination with Chaffee further discloses Wu's rotary valve 100

(which includes this gate member 200 (the air conduit)) is disposed within a built in housing (similar to Chaffee's Housing), such that gate member 200 is movable to a first position while remaining disposed at least in part in the housing and, in this first position, the fan and motor 15 inflate air mattress 400 (the inflatable body).

218. Referring to Figure 1, below, gate member 200 (orange) "is shown in a first position for directing air flow in a pressurizing mode." Wu (Ex. 1005), 3:3-6. "When gate member 200 [orange] is in the first, pressurizing position, air [blue] from blower 15 is routed to air mattress 400 shown in FIG. 1, while outside air [blue] is drawn in through filter 30 shown in FIG. 1 and into the intake of blower 15." Wu, 5:67-6:4; *see also* Ex. 1070. *See also* Wu '925 Application (Ex. 1066), 4:22-24; 8:27-30.

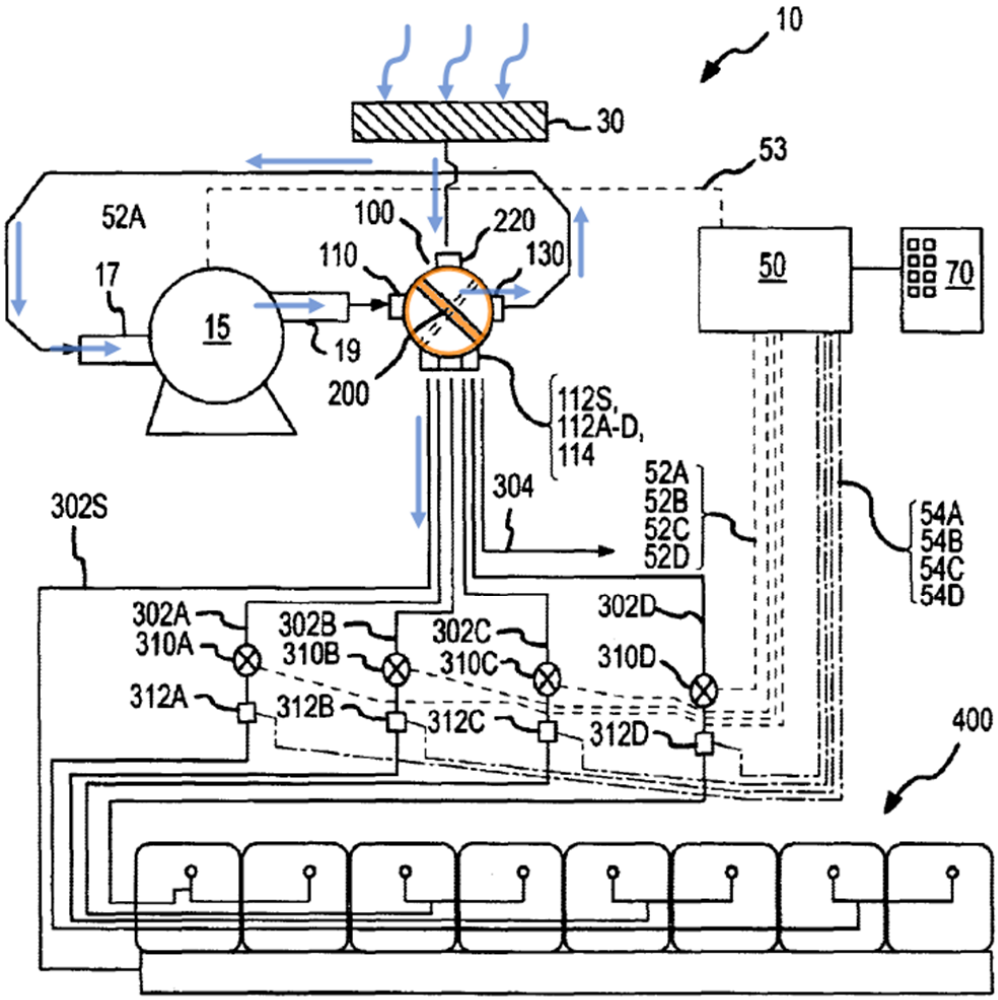

FIG.1

Ex. 1005, Fig. 1.

219. Figure 2 of Wu, which I have reproduced below, at left, shows a more detailed view of gate member 200. In the first position, "second port 230 [dark blue] of gate member 200 is aligned with outlet port 130 [also in dark blue] of valve housing 101 (while third port 232 is blocked by base wall 102 of valve

housing 101)[.]" Wu (Ex. 1005), 5:61-63; *see also* Wu '925 Application (Ex. 1066), 8:23-25.

Fig. 2 (Ex. 1005)	Ex. 1068 (time stamp 00:24)
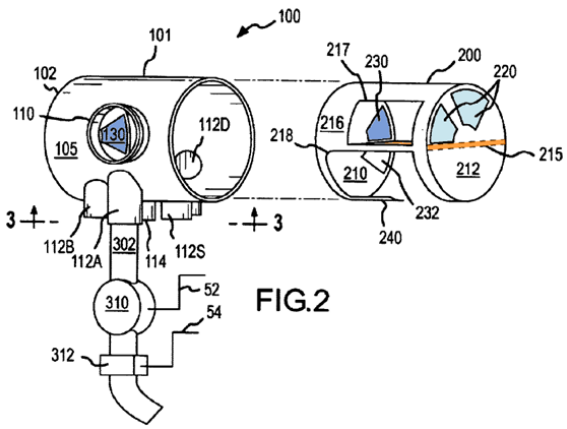	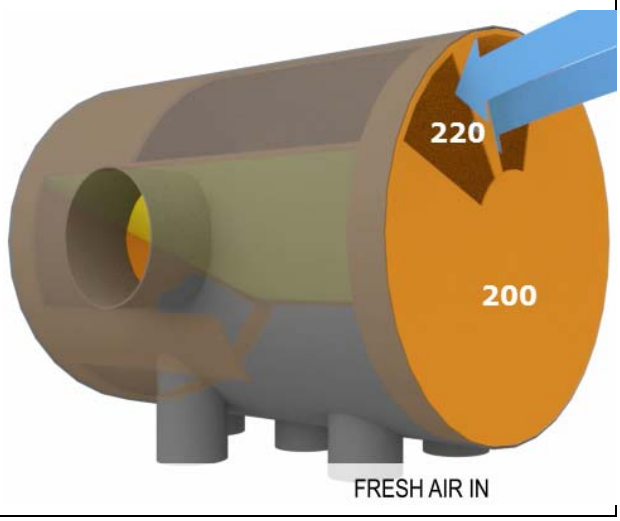

220. As a result, "outside air can flow through first ports 220 [light blue] in second end wall 212, into the first portion of gate member 200," which is partially defined by horizontal wall 215 (orange) that extends through the middle of gate member 200. Wu, 5:64-65. To assist the Board's understanding, I have also provided a still of the animation provided in Ex. 1068, above at right, to show this air flow (blue arrows) entering ports 220 when gate member 200 (orange) is inserted into housing 101 (faded gray) and sits in the first position.[42] *See also* Wu '925 Application (Ex. 1066), 8:26-27.

[42] As I explained above, Wu includes a housing 101. *See* ¶ 215, above. While I am referring to that housing 101 here, to be clear, the "housing" that

221. Referring to the same annotated version of Figure 2, below at left, air then flows "through second port 230 [dark blue] of gate member 200, through outlet port 130 [also in dark blue] of housing 101 and into the intake of blower 15 [not shown in Figure 2]." Wu (Ex. 1005), 5:65-67. To assist the Board's understanding, I have also provided a still of the animation provided in Ex. 1068, below at right, to show this air flow (blue arrows) travelling through the first portion of gate member 200 (orange) and out the housing 101's outlet 130 to the intake of the blower 15 (not shown) when gate member 200 (orange) is inserted into housing 101 (faded gray) and sits in the first position. *See also* Wu '925 Application (Ex. 1066), 8:24-30.

---

satisfies this limitation is the built in housing that would result from the combination of Wu and Chaffee. That is, *both* Wu's housing 101 *and* Wu's movable air conduit 200 would be at least partially retained inside the Chaffee + Wu housing during the inflation (and deflation) operations, as I describe in this section of my declaration.

Fig. 2 (Ex. 1005)	Ex. 1068 (time stamp 00:27)
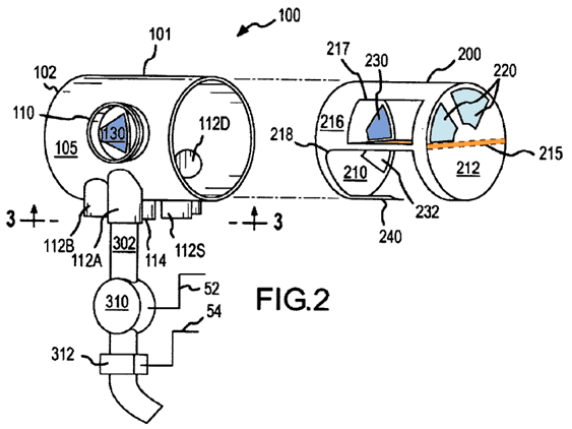	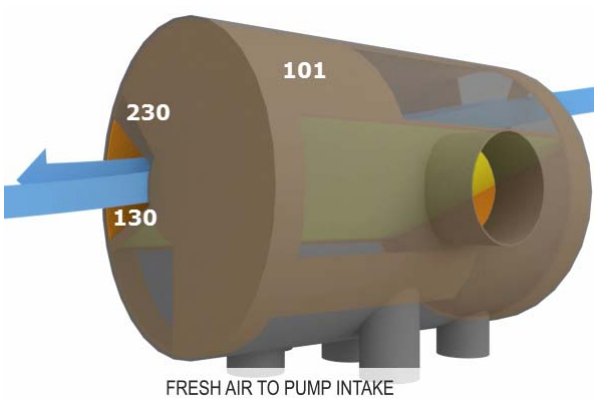

222. Referring to a different annotated Figure 2, below at left, from blower 15 (not shown), "air can flow through inlet port 110 [purple] of housing 101, into the second portion of gate member 200 and then out through air mattress supply ports 112S, 112A, 112B, 112C and 112D [all in green] and exhaust port 114." Wu (Ex. 1005), 5:56-60. To assist the Board's understanding, I have also provided a still of the animation provided in Ex. 1068, below at right, to show this air flow (blue arrows) travelling from blower 15 outlet (not shown) to inlet 110 and into the second portion of gate member 200 (orange) and through the air mattress 112 supply ports when gate member 200 (orange) is inserted into housing 101 (faded gray) and sits in the first position. *See also* Wu '925 Application (Ex. 1066), 8:18-23.

Fig. 2 (Ex. 1005)	Ex. 1068 (time stamp 00:38)
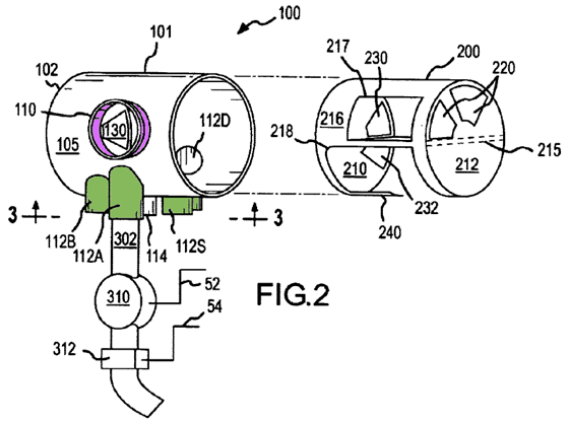	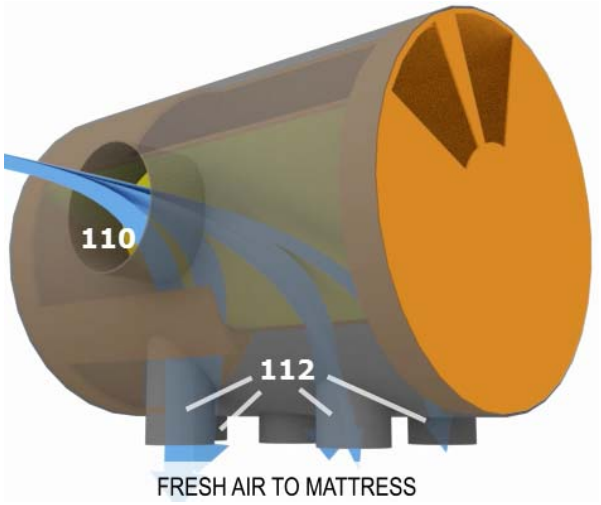

223. ***Movable air conduit occupying a second position during deflation while at least partially disposed within the housing.*** Wu also disclosed that this gate member 200 (the air conduit) has a second position in which the fan and motor 15 deflate air mattress 400 (the inflatable body). And as I demonstrate below, Wu in combination with Chaffee further disclosed that this gate member 200 (the air conduit) is movable to a second position while remaining disposed at least in part in the housing and, in this second position, the fan and motor 15 deflate air mattress 400 (the inflatable body).

224. Specifically, "[t]he various ports and openings of valve housing 101 and gate member 200 are arranged so that the valve can operate in a . . . ***second position*** in which air is pulled from the air mattress to quickly deflate the air mattress." Wu (Ex. 1005), 5:44-48 (emphasis added). And, as I explained above, as taught by Chaffee, rotary valve 100 (which includes gate member 200) is

contained by the housing. So, in combination with Chaffee, gate member 200 (the air conduit) is moveable to its second position while remaining disposed within the housing. *See also* Wu '925 Application (Ex. 1066), 8:13-15.

225. The second position of gate member 200 (orange) is "shown in phantom in FIG. 1," which I have reproduced in annotated form, below. Wu (Ex. 1005), 4:53. "When in the second position, gate member 200 directs air [blue arrows] from air mattress 400 into intake 17 of blower 15 while air leaving blower 15 is directed through filter 30 to the outside environment." *Id.* at 4:54-59; *see also* Ex. 1070. *See also* Wu '925 Application (Ex. 1066), 7:11-13.

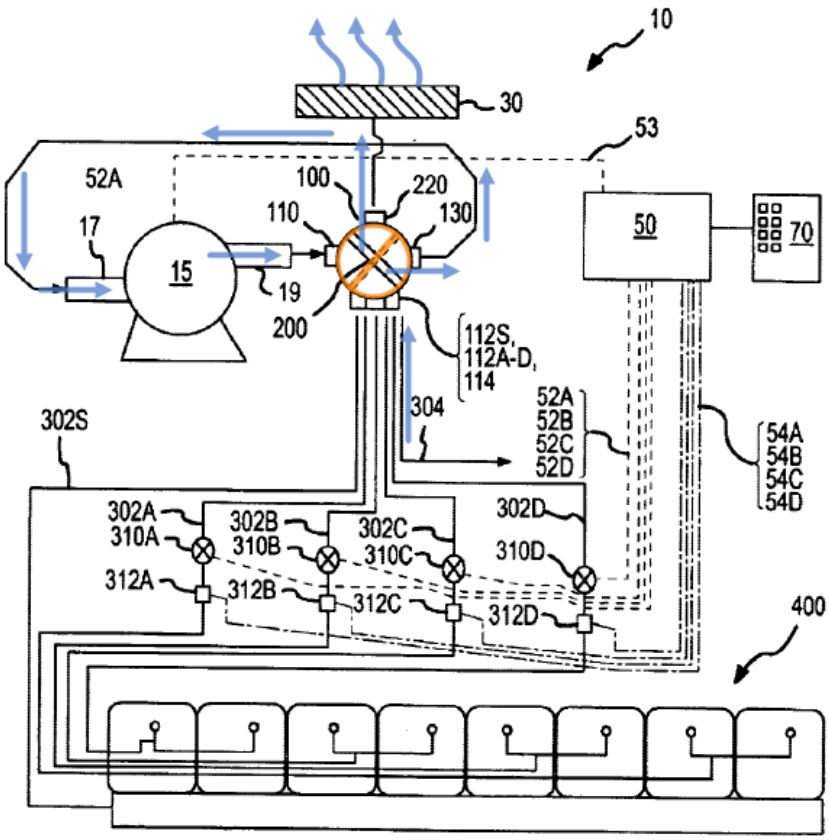

FIG.1

Ex. 1005, Fig. 1.

226. Referring to an annotated version of Figure 2, below at left, in this second position, "wall 215 [orange] is interposed between inlet port 110 [purple] and air mattress supply ports 112S, 112A, 112B, 112C and 112D [green] as well as exhaust port 114." Wu (Ex. 1005), 6:5-8. To assist the Board's understanding, I have also provided a still of the animation provided in Ex. 1069, below at right, to

show this second position of gate member 200 (orange) when it is inserted into housing 101 (faded gray). *See also* Wu '925 Application (Ex. 1066), 9:1-4.

Fig. 2 (Ex. 1005)	Ex. 1069 (time stamp 00:01)
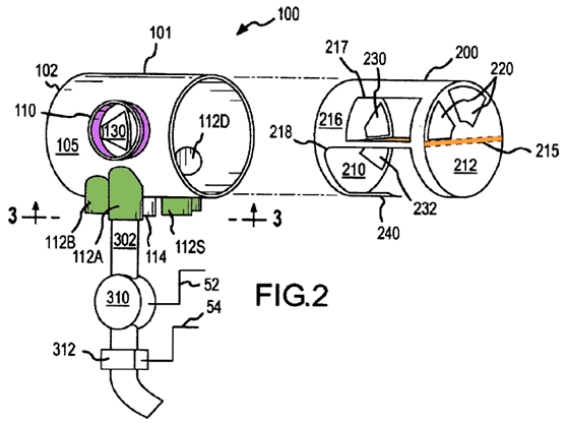	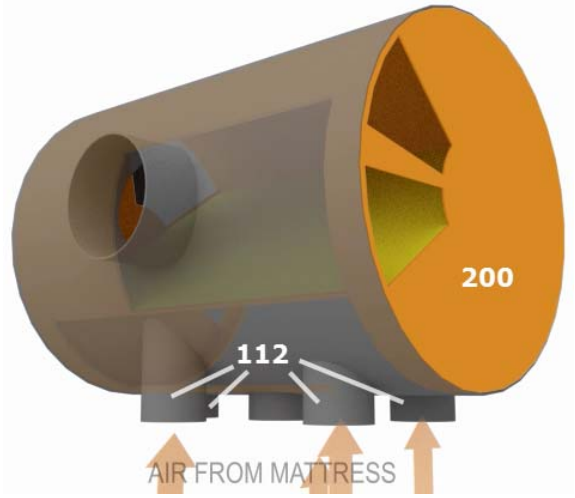

227. As a result, and referring to a different annotated Figure 2, below at left, "third port 232 [light blue] of gate member 200 aligns with outlet port 130 [also in light blue] of housing 101 so that air is pulled in through air mattress supply ports 112S, 112A, 112B, 112C and 112D [green], through third port 232 [light blue], then through outlet port 130 [light blue] of housing 101 and into the intake of blower 15 [not shown]." Wu (Ex. 1005), 6:9-14. To assist the Board's understanding, I have also provided a still of the animation provided in Ex. 1069, below at right, to show air flowing (in red) from the air mattress supply ports 112 through the outlet port 130 to the intake of the blower 15 (not shown) when gate member 200 (orange) is inserted into housing 101 (faded gray) and sits in its second position. *See also* Wu '925 Application (Ex. 1066), 9:4-8.

Fig. 2 (Ex. 1005)	Ex. 1069 (time stamp 00:07)
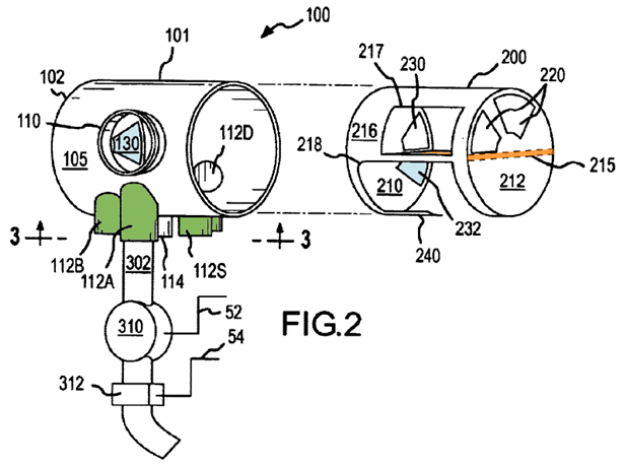	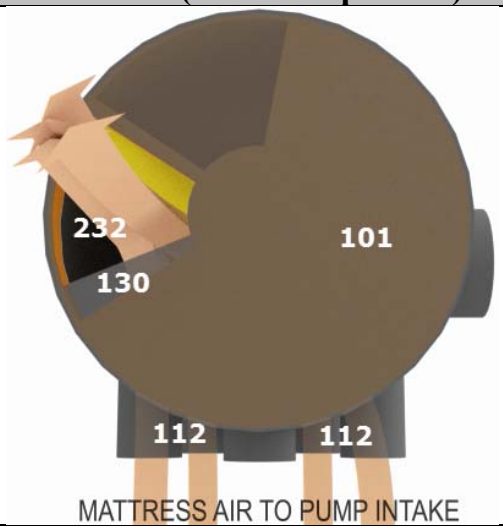

228. From there, and referring to the annotated version of Figure 2, below at left, "blower exhaust air passes through inlet port 110 [purple] of housing 101 and out through first ports 220 [dark blue] into the outside environment (while second port 230 is blocked by base wall 102 of housing 101)." Wu (Ex. 1005), 6:14-18. To assist the Board's understanding, I have also provided a still of the animation provided in Ex. 1069, below at right, to show air flowing (in red) from the blower 15 outlet (not shown) through the inlet port 110 to the outside environment when gate member 200 (orange) is inserted into housing 101 (faded gray) and sits in its second position. *See also* Wu '925 Application (Ex. 1066), 9:9-12.

Fig. 2 (Ex. 1005)	Ex. 1069 (time stamp 00:16)
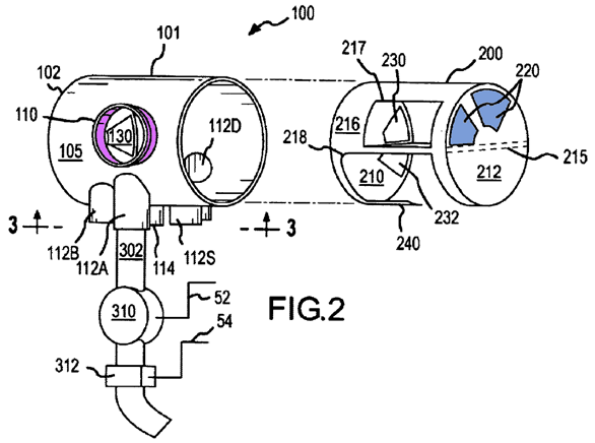	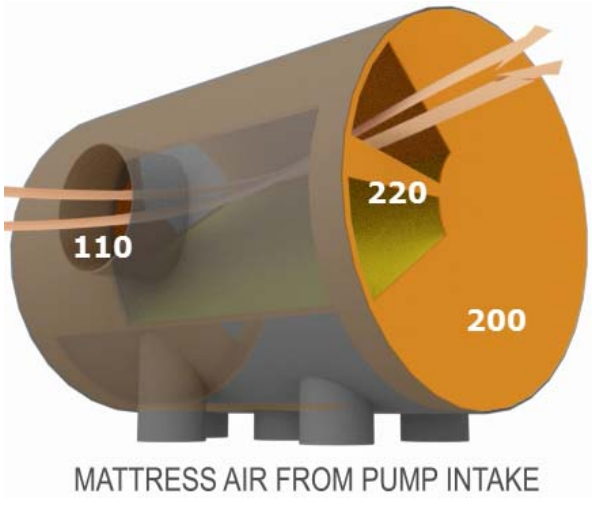

229. Thus, when gate member 200 (the air conduit) is in the second position, "air is drawn out of air mattress 400 shown in FIG. 1 and blower exhaust is expelled into the outside environment through filter 30 shown in FIG. 1 causing air mattress 400 to quickly deflate." Wu (Ex. 1005), 6:19-22; *see also* Ex. 1070; *see also* Wu '925 Application (Ex. 1066), 9:12-14

230. In short, Wu in combination with Chaffee disclosed a movable air conduit (Wu's gate member 200) disposed at least in part in the housing (as taught by Chaffee), and that air conduit has a first position in which the fan and motor 15 inflate the air mattress 400 (the inflatable body) and a second position in which the fan and motor 15 deflate the inflatable body. Further, Wu in combination with Chaffee also taught that when gate member 200 (the air conduit) is moved to the second position, it remains disposed at least in part in the housing.

wherein air flows between the interior region of the housing and the inflatable body during inflation and deflation.

231. This limitation contains two features: (1) air flows between the interior region of the housing and the inflatable body during inflation; and (2) air flows between the interior region of the housing and the inflatable body during deflation. Wu in combination with Chaffee disclosed both of these features.

232. ***Air flow during inflation.*** As I explained above, air flows through gate member 200 of Wu during inflation. *See* ¶¶ 217-22, above; *see also* Wu (Ex. 1005), 5:56-6:4 ("When gate member 200 is in the first position, air can flow through inlet port 110 of housing 101, ***into the second portion of gate member 200*** and ***then out through air mattress supply ports*** 112S, 112A, 112B, 112C, and 112D and exhaust port 114. . . . When gate member 200 is in the first, pressurizing position, air from blower 15 is ***routed to air mattress 400*** shown in FIG. 1, while outside air is drawn in through filter 30 shown in FIG. 1 and into the intake of blower 15." (emphases added)); Wu (Ex. 1005), Fig. 1. *See also* Wu '925 Application (Ex. 1066), 8:18- 30; Figure 1.

233. When combined with Chaffee, gate member 200 of Wu (as positioned within Wu's housing 101) is disposed within the interior region of the built in housing taught by Chaffee. *See* ¶¶ 189-97, above. Because air flows through gate member 200 during inflation and gate member 200 is disposed within the built in housing, air must flow from the interior region of the housing into the air mattress

400 (the inflatable body) during inflation as further taught by Chaffee—i.e., between the interior region of the housing and the inflatable body.

234. ***Air flow during deflation.*** As I also explained above, air flows through gate member 200 of Wu during deflation. *See* ¶¶ 223-29, above; *see also* Wu (Ex. 1005), 6:8-16 ("When the gate member 200 is in the second position, third port 232 of gate member 200 aligns with outlet port 130 of housing 101 so that ***air is pulled in through air mattress supply ports*** 112S, 112A, 112B, 112C and 112D [from air mattress 400], ***through third port 232***, then through outlet port of housing 101 and into the intake of blower 15. Also when gate member 200 is in the second [position], blower exhaust air passes through inlet port 110 of housing 101 and ***out through first ports*** 220 into the outside environment" (emphases added)); Wu (Ex. 1005), Fig. 1; s*ee also* Wu '925 Application (Ex. 1066), 9:4-11; Fig. 1.

235. When combined with Chaffee, gate member 200 of Wu (as positioned within Wu's housing 101) is disposed within the interior region of the built in housing as taught by Chaffee. *See* ¶¶ 189-97, above. Because air flows through gate member 200 during deflation and gate member 200 is disposed within the built in housing, air must flow from the inflatable body into the interior region of the housing during deflation as further taught by Chaffee—i.e., between the interior region of the housing and the inflatable body.

2. Claim 2 – The inflatable product as claimed in claim 1, wherein air flows from the interior region of the housing into the inflatable body when the air conduit is in the first position.

236. Wu in combination with Chaffee disclosed this limitation. A POSA understood that inflation (which is what these claims require when the air conduit is in the "first position") necessarily requires air flowing from outside an inflatable product into an inflatable product. Indeed, in Wu, as I explained above, air flows from gate member 200 of Wu to air mattress 400 (the inflatable body) during inflation. *See* ¶¶ 232-33, above. When combined with Chaffee, gate member 200 of Wu is disposed within the built in housing as taught by Chaffee. *See* ¶¶ 189-97, above. Therefore, in combination, air flows from the interior region of the built in housing into Wu's air mattress 400 when Wu's gate member 200 is in the first position—i.e., the inflation position.

3. Claim 3 – The inflatable product as claimed in claim 1, wherein air flows from the inflatable body into the interior region of the housing when the air conduit is moved to the second position.

237. Wu in combination with Chaffee disclosed this limitation. A POSA understood that deflation (which is what these claims require when the air conduit is in the "second position") necessarily requires air flowing from an inflatable product out to the ambient environment. Indeed, in Wu, as I explained above, air flows from Wu's air mattress 400 (the inflatable body) to gate member 200 during

deflation. *See* ¶¶ 234-35, above. When combined with Chaffee, Wu's gate member 200 is disposed within the built in housing as taught by Chaffee. *See* ¶¶ 189-97, above. Therefore, in combination, air flows from the air mattress 400 (the inflatable body) to the interior region of the built in housing when gate member 200 is moved to the second position—i.e., the deflation position.

4. Claim 4 – The inflatable product as claimed in claim 1, wherein the air conduit is a pipe.

238. Wu disclosed this limitation. As I explained above, Wu's gate member 200 is an air conduit. *See* ¶¶ 213-30, above. A POSA would have also understood Wu's gate member 200 to be a pipe, as it is a hollow body for conveying air or other gases, as I explained above. *See id.*; *see also* ¶¶ 166-70, above.

239. Further, even if the Board finds that a pipe is further limited to a tubular or cylindrical object, part, or passage, Wu still disclosed a pipe, as gate member 200 is a tubular or cylindrical object, part, or passage.

240. Specifically, Wu describes gate member 200 as a cylindrical structure. Referring to the annotated version of Figure 2, below, Wu states that "[g]ate member 200 has a first ***circular*** end wall 210 [blue] at one end, a second ***circular*** end wall 212 [also in blue] at the opposite end, [and] a ***cylindrical*** wall 216 [orange] . . . that extends between and connects first end wall 210 and the second

end wall 212." Wu (Ex. 1005), 5:10-5:14 (emphases added); *id.* 5:30; *see also* Wu '925 Application (Ex. 1066), 7:30-31-8:1-3; 8:8-9; *see also* Exs. 1068, 1069.

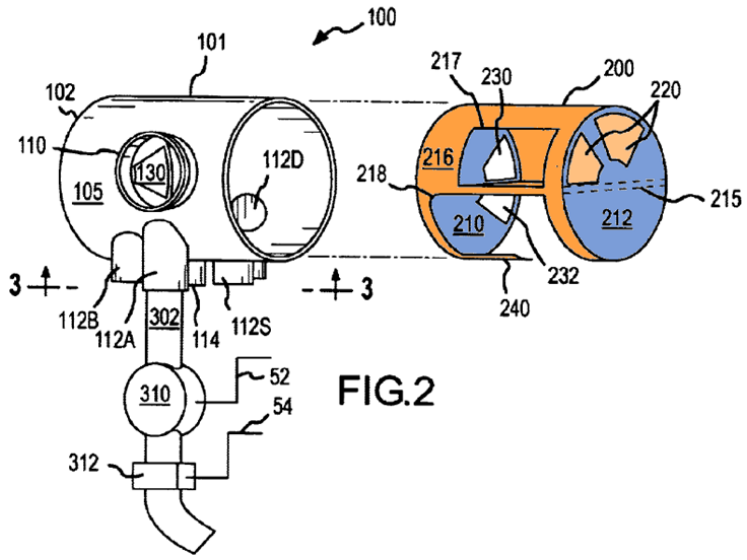

Ex. 1005, Fig. 2.

241. Although cylindrical wall 216 (orange) is shown and described as having various openings—which, to be clear, a POSA would have considered irrelevant to the question of whether a structure constitutes a pipe because a pipe can still convey air or other gasses (i.e., perform its intended function) even if it has some openings—Wu describes gate member as having "a substantially complete cylindrical wall 216." Wu (Ex. 1005), 5:35-36. Therefore, these various openings would not have affected a POSA's understanding of gate member 200 as a pipe. *See also* Wu '925 Application (Ex. 1066), 8:1-2, 8-9, Fig. 2.

242. Wu also describes gate member 200 as being disposed within valve housing 101 of rotary valve 100, which also has a cylindrical structure.

Specifically, Wu states that gate member 200 is "received by valve housing 101" and that valve housing 101 has "an open ***cylindrical*** shape." Wu (Ex. 1005), 5:9; *id.* at 4:63 (emphasis added). Further, Wu describes "cylindrical wall 216" of gate member 200 as being "sized to fit within housing 101." Wu, 5:30-31. This further confirms that a POSA would have understood gate member 200 to constitute a pipe, even under an overly restrictive construction of the term. *See also* Exs. 1068, 1069. *See also* Wu '925 Application (Ex. 1066), 7:18, 29-30; 8:8-9.

5. Claim 5 – The inflatable product as claimed in claim 4, wherein the pipe is rotatable.

243. Wu disclosed this limitation. Referring to the annotated version of Figure 2, below, Wu disclosed gate member 200 (orange), which is a pipe, as I explained above, as being "received by valve housing 101 so that it can ***rotate*** within valve housing 101." Wu (Ex. 1005), 5:9-10 (emphasis added). Elsewhere, Wu describes gate member 200 (orange) as being "***turned*** to a second position." Wu, 6:5 (emphasis added); *id.* at 4:52-53; Exs. 1068, 1069. *See also* Wu '925 Application (Ex. 1066), 7:10, 29-30; 9:1.

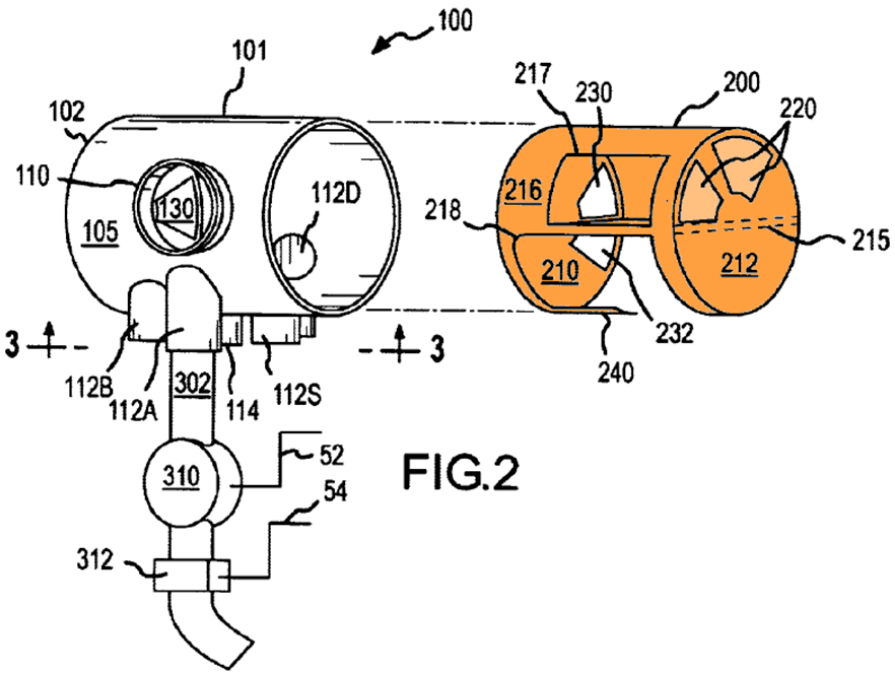

Ex. 1005, Fig. 2.

244. Wu also consistently and repeatedly describes the combination of gate member 200 and valve housing 101 as a two-position "***rotary*** valve" 100. *See, e.g.,* Wu (Ex. 1005), 1:60-64; 2:46-47; 2:64-66; 3:2-6; 3:29; 4:51-53; 4:60-62; 5:17-19; 6:34; 6:46; 7:10; 9:5; 10:43; 11:10; 11:16; *see also* Wu '925 Application (Ex. 1066), 2:28-31; 4:6,17-18, 21; 5:8; 7:9-11,16-17; 8:1; 10:4-5; 11:13.

6. <u>Claim 6 – The inflatable product as claimed in claim 4, wherein the pipe is a switching pipe.</u>

245. Wu disclosed this limitation in the form of gate member 200, which, as I explained above, is a pipe. *See* ¶¶ 238-42, above. As I explained above, Wu described gate member 200 (the pipe) as ***switching*** between two positions for an inflate mode and a deflate mode. *See* Wu, 2:3-8; *see also id.* at 4:52-53 (describing

the activation of deflate mode by "***turning*** gate member 200 of rotary valve 100 to a second position" (emphasis added)); 6:5 ("When gate member 200 is ***turned*** to a second position . . . ." (emphasis added)); *see also* ¶¶ 243-44, above (describing the switch between two positions as being accomplished by rotation). *See also* Wu '925 Application, 3:4-7; 7:10-11; 9:1.

246. Thus, Wu disclosed that the pipe (gate member 200) is a switching pipe.

7. <u>Claim 7 – The inflatable product as claimed in claim 1, wherein the air conduit is arranged to convey air pumped by the fan and motor assembly.</u>

247. Wu disclosed this limitation for reasons I discussed above. Specifically, Wu disclosed that air conduit 200 conveys air pumped by the electric motor-powered blower 15 in both the inflate mode and deflate mode, as I explained in paragraphs 215-30, above, and will explain in more detail, below.

248. Referring to the annotated version of Figure 1, below, Wu disclosed that "[w]hen gate member 200 [orange] is in the first, pressurizing position, air [blue arrows] ***from blower 15*** is routed to air mattress 400 shown in FIG. 1, while outside air is drawn in through filter 30 shown in FIG. 1 and into the intake of blower 15." Wu, 5:67-6:4. On the way to air mattress 400, air (blue arrows) flows "through inlet port 110 of housing 101, ***into the second portion of gate member 200*** [orange] and then out through air mattress supply ports 112S, 112A, 112B,

112C and 112D and exhaust port 114." Wu, 5:56-60 (emphasis added). That is, gate member 200 (the air conduit) is arranged to convey air pumped by electric motor-powered blower 15 (the fan and motor assembly) in the inflate mode. *See also* Wu, 5:44-47 ("The various ports and openings of valve housing 101 and ***gate member 200*** are ***arranged*** so that the valve can operate in a first position in which ***pressurized air is delivered to the air mattress***" (emphases added)); Exs. 1070, 1068. *See also* Wu '925 Application (Ex. 1066), 8:13-23, 27-30.

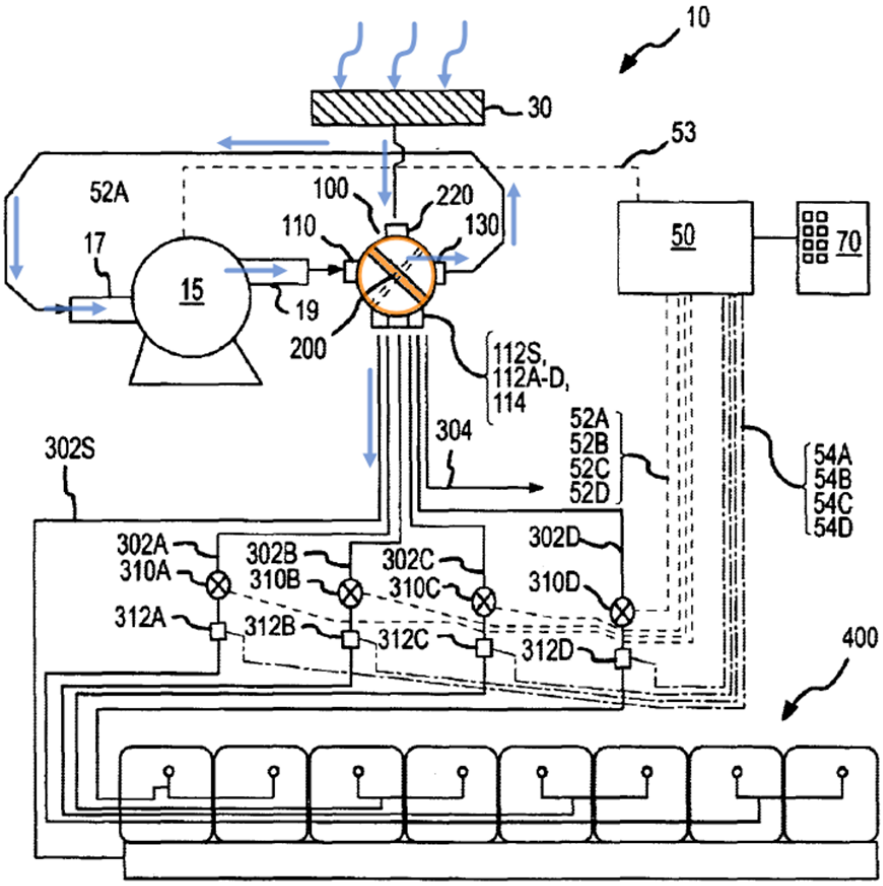

FIG.1

Ex. 1005, Fig. 1.

249. Wu also disclosed that air conduit 200 is arranged to convey air pumped by electric motor-powered blower 15 (the fan and motor assembly) in the deflate mode. Referring to the annotated version of Figure 1, below, Wu disclosed that "[w]hen the gate member 200 is in the second position, third port 232 of gate member 200 [orange] aligns with outlet port 130 of housing 101 so that ***air [blue arrows] is pulled in through air mattress*** supply ports 112S, 112A, 112B, 112C and 112D[.]" Wu, 6:8-12 (emphasis added). Once pulled from air mattress 400, air (blue arrows) flows "***through third port 232*** [of gate member 200], then through outlet port 130 of housing 101 and into the intake of blower 15" and, then, "air [blue arrows] passes through inlet port 110 of housing 101 and ***out through first ports 220*** [of gate member 200 (orange)] into the outside environment[.]" Wu, 6:12-16 (emphases added). That is, as in the inflate mode, gate member 200 (the air conduit) is arranged to convey air pumped by electric motor-powered blower 15 (the fan and motor assembly) in the deflate mode. *See also* Wu, 5:44-48 ("The various ports and openings of valve housing 101 and ***gate member 200*** are ***arranged*** so that the valve can operate in . . . a second position in which ***air is pulled from the air mattress*** to quickly deflate the air mattress." (emphases added)); Exs. 1070, 1069. *See also* Wu '925 Application (Ex. 1066), 8:13-15; 9:4-12.

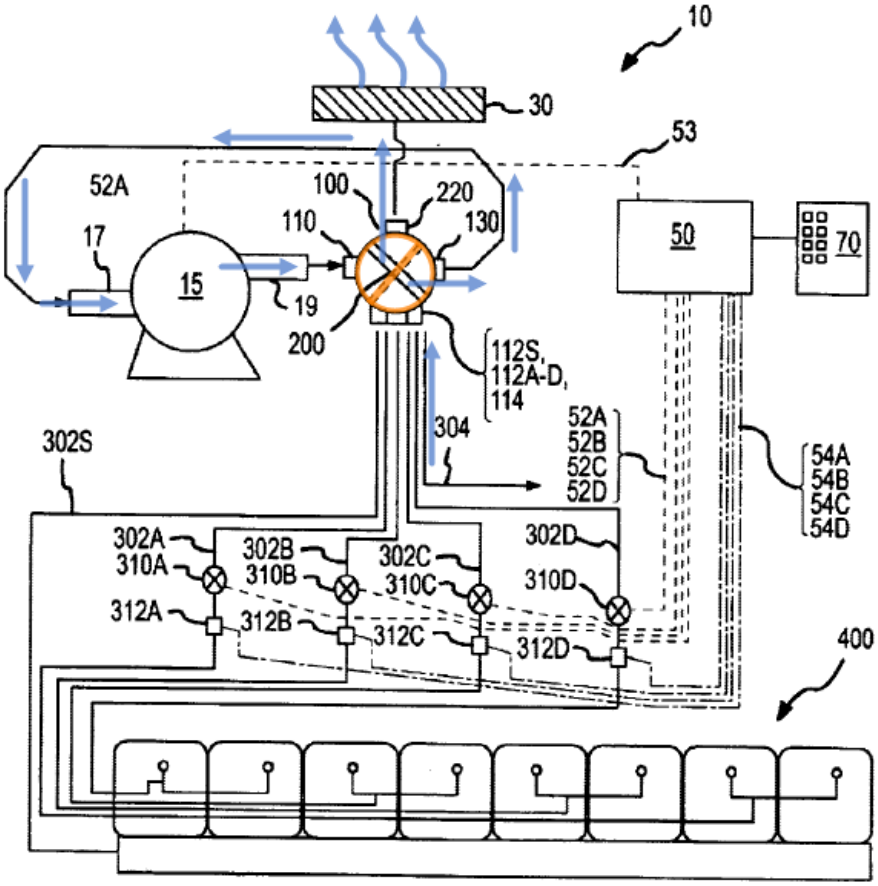

FIG.1

Ex. 1005, Fig. 1.

8. **<u>Claim 8 – The inflatable product as claimed in claim 7, wherein the air conduit has a first end and a second end, and wherein the fan and motor assembly causes air to be conveyed from the first end of the air conduit to the second end of the air conduit when the air conduit is in the first position.</u>**

250. This limitation contains two features: (1) the air conduit has a first end and a second end; (2) the fan and motor assembly causes air to be conveyed from the first end of the air conduit to the second end of the air conduit when the air conduit is in the first position. Wu disclosed both features.

251. ***First and Second Ends of the Air Conduit.*** Wu disclosed that air conduit 200 has a first end and a second end. Referring to an annotated version of Figure 2, below, Wu disclosed that gate member 200 "has a first circular end wall 210 at one end" (green) and "a second circular end wall 212 at the opposite end" (blue). Wu, 5:9-14. For purposes of my analysis, end wall 212 (blue) is the first end of gate member 200 (the air conduit), and end wall 210 (green) is the second end of gate member 200 (the air conduit). *See also* Wu '925 Application (Ex. 1066), 7:30-31-8:1-3.

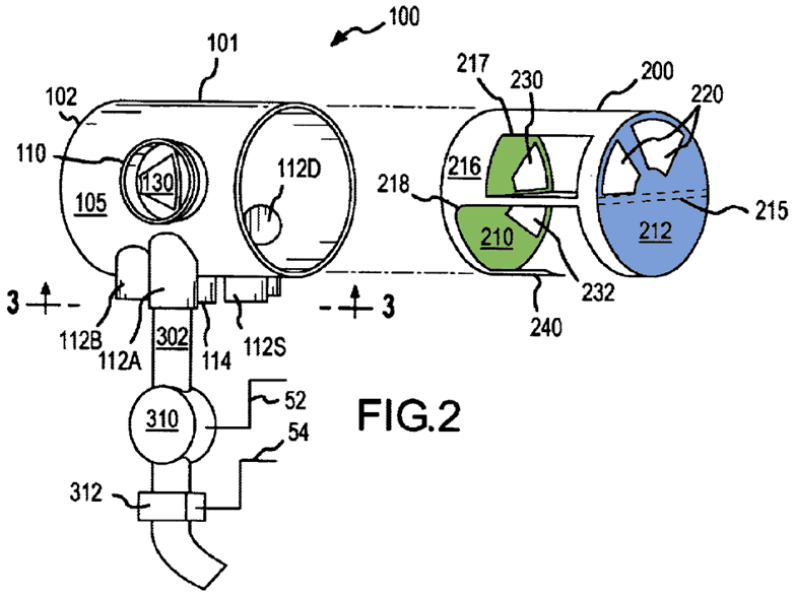

FIG.2

Ex. 1005, Fig. 2.

252. ***Conveying Air During an Inflation Operation.*** Wu disclosed that the electric motor-powered blower 15 (the fan and motor assembly) causes air to be conveyed from the first end 212 of gate member 200 (the air conduit) to the second end 210 when the gate member 200 (the air conduit) is in the first, inflating position. As I explained above, the gate member 200 conveys air pumped by the electric motor-powered blower 15 in the inflate mode (i.e., the first position). *See* ¶¶ 217-22, above. Further, Wu explains that the air travels through the gate member 200 (the air conduit) from the first end 212 to the second end 210:

> Also while gate member 215 is in the first position, second port 230 of gate member 200 is aligned with outlet port 130 of valve housing 101 . . . ***so that outside air can flow through*** first ports 220 in ***second end wall 212*** [i.e., the first end], into the first portion of gate member 200, ***through second port 230 [of end wall 210*** (i.e., the second end)] ***of gate member 200***, through outlet port 130 of housing 101 and into the intake of blower 15.

Wu (Ex. 1005), 5:60-67 (emphases added); *see also* Wu '925 Application (Ex. 1066), 8:23-27.

253. To assist the Board's understanding, I have also provided a still (at time stamp 00:27) of the animation provided in Ex. 1068, below, to show that the

blower 15 causes air (in blue) to flow from the first end to the second end of gate member 200 (orange) in its first position.

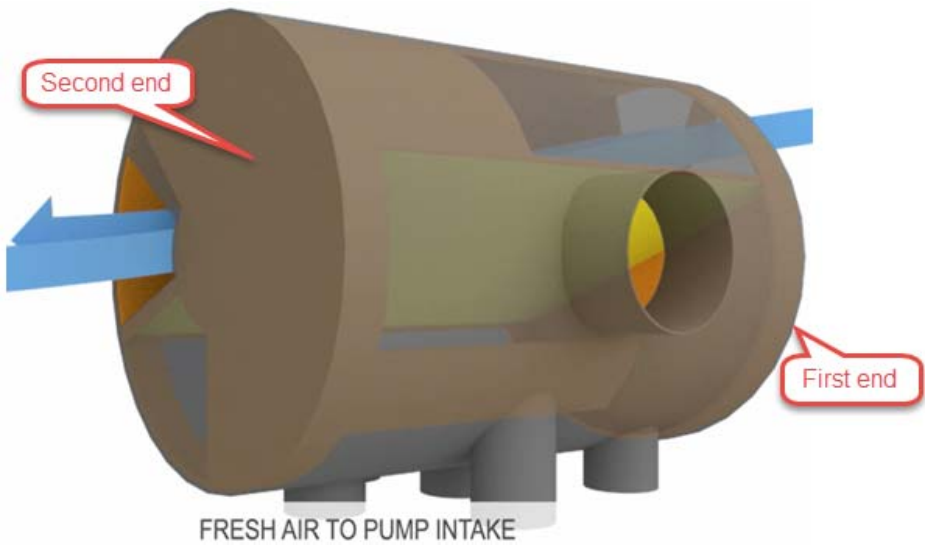

9. <u>Claim 9 – The inflatable product as claimed in claim 8, wherein the fan and motor assembly causes air to be conveyed in sequence from ambient, through the first end of the air conduit, to the second end of the air conduit, and into the inflatable body when the air conduit is in the first position.</u>

254. This limitation contains three features: in the first position, the fan and motor assembly causes air to be conveyed in sequence (1) from ambient; (2) through the first end of the air conduit, to the second end of the air conduit; and (3) into the inflatable body. Consistent with my previous analysis, because Claim 9 is simply reciting a basic inflation operation, and Wu described inflating an air mattress, Wu disclosed all three features of Claim 9.

255. ***Conveying Air From Ambient.*** Wu disclosed that when the gate member 200 (the air conduit) is in the first position (i.e., the inflation position), the

electric motor-powered blower 15 (the fan and motor assembly) causes air to be conveyed in sequence starting from the ambient:

> Also while gate member 215 is in the first position, second port 230 of gate member 200 is aligned with outlet port 130 of valve housing 101 . . . so that ***outside air*** can flow through first ports 220 in second end wall 212, into the first portion of gate member 200, through second port 230 [of end wall 210] of gate member 200, through outlet port 130 of housing 101 and into the intake of blower 15.

Wu (Ex. 1005), 5:60-67 (emphasis added); *see also* Wu '925 Application (Ex. 1066), 8:23-27.

256. To assist the Board's understanding, I have also provided a still (at time stamp 00:23) of the animation provided in Ex. 1068, below, to show that the blower 15 causes air (in blue) to flow starting from ambient when gate member 200 (orange) is in its first position.

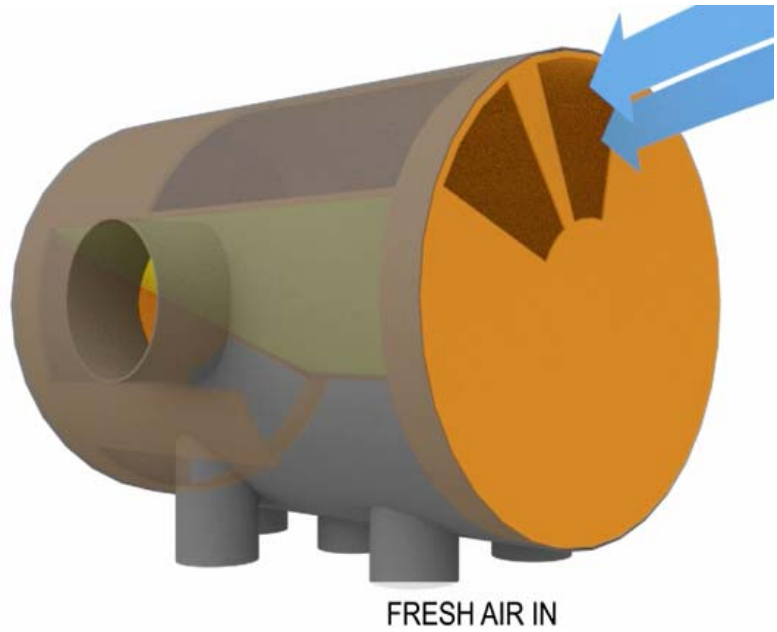

257. ***Through the First and Second Ends of the Conduit.*** Wu disclosed air is conveyed from ambient through the first end of gate member 200 (the air conduit) to the second end of gate member 200 (the air conduit), as I explained above. *See* ¶¶ 250-53, above.

258. ***Air Then Flows Into the Inflatable Body.*** Wu disclosed that the air then flows into the air mattress 400 (the inflatable body): "When gate member 200 is in the first, pressurizing position, air from blower 15 is ***routed to air mattress 400*** shown in FIG. 1, while outside air is drawn in through filter 30 shown in FIG. 1 and into the intake of blower 15." Wu, 5:67-6:4 (emphasis added); *see also* Wu '925 Application (Ex. 1066), 8:27-30.

259. To assist the Board's understanding, I have also provided a still (at time stamp 00:38) of the animation provided in Ex. 1068, below, to show that the

blower 15 causes air (in blue) to flow into the air mattress 400 (not shown) after flowing through the second end of gate member 200 (orange) in its first position.

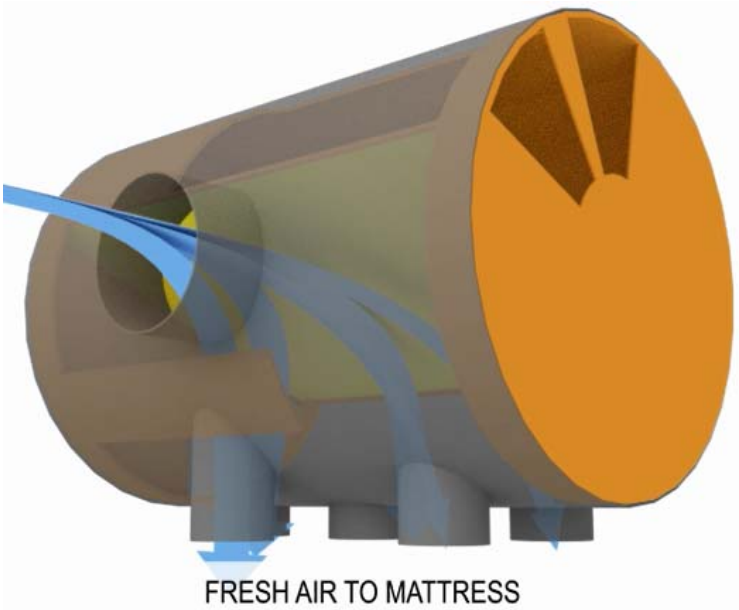

10. <u>Claim 10 – The inflatable product as claimed in claim 8, wherein the fan and motor assembly causes air to be conveyed from the second end of the air conduit to the first end of the air conduit when the air conduit is in the second position.</u>

260. Wu disclosed this limitation. Specifically, Wu disclosed that when the gate member 200 (the air conduit) is in the second, deflating position, the electric motor-powered blower 15 (the fan and motor assembly) causes air to be conveyed from the second end 210 of gate member 200 (the air conduit) to the first end 212.

261. Referring to an annotated version of Figure 2, below, Wu disclosed that when gate member 200 is in the second position, "air is pulled . . . ***through***

third port 232 [of air conduit second end 210], then through outlet port 130 of housing 101 and into the intake of blower 15." Wu, 6:10-14 (emphasis added). Then, "blower exhaust air passes through inlet port 110 of housing 101 and ***out through first ports 220 [of air conduit first end 212]*** into the outside environment (while second port 230 is blocked by base wall 102 of housing 101)." Wu, 6:14-18 (emphasis added). *See also* ¶¶ 223-29, above; Wu '925 Application (Ex. 1066), 9:4-12.

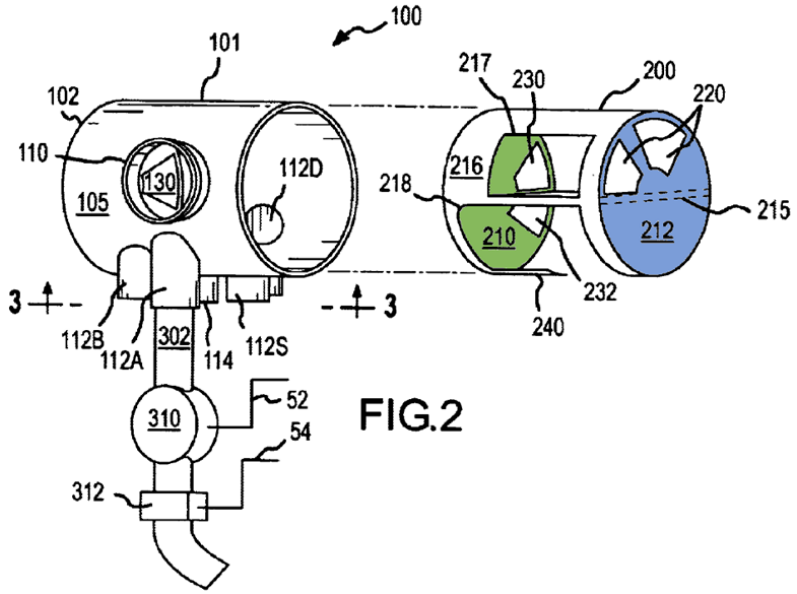

Ex. 1005, Fig. 2.

262. To assist the Board's understanding, I have also provided a still (at time stamp 00:08) of the animation provided in Ex. 1069, below, to show that the blower 15 causes air (in light orange) to flow first through the second end of gate member 200 (orange) in its second position.

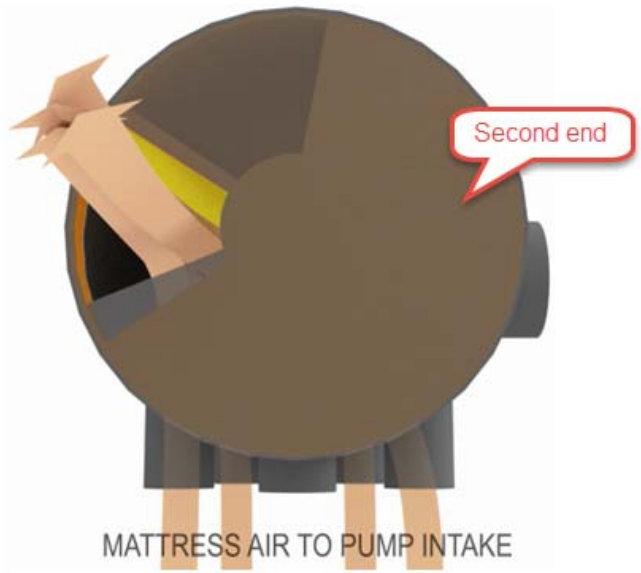

263. Then, blower 15 causes air (in light orange) to flow first through the first end of gate member 200 (orange) in its second position after passing through the blower 15, as shown in the still (at time stamp 00:16) of the animation provided in Ex. 1069, below.

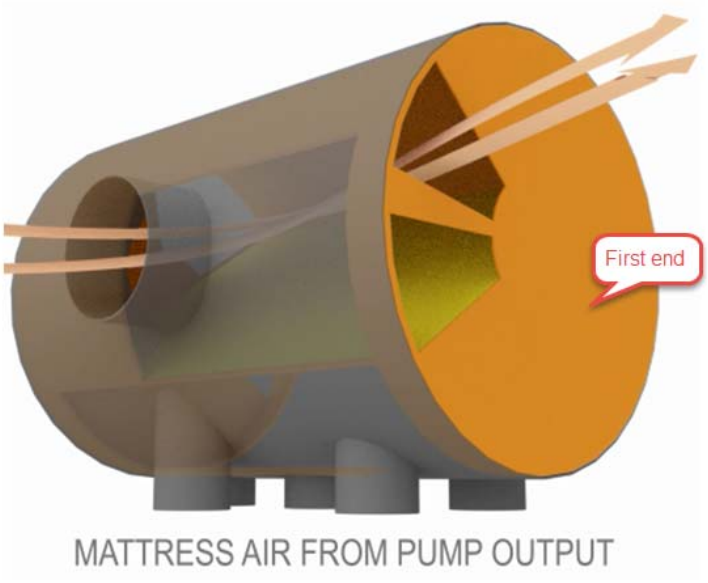

11. Claim 11 – The inflatable product as claimed in claim 10, wherein the fan and motor assembly causes air to be conveyed in sequence from the inflatable body, through the second end of the air conduit, to the first end of the air conduit, to ambient when the air conduit is in the second position.

264. This limitation contains three features: in the air conduit's second position, the fan and motor assembly causes air to be conveyed in sequence (1) from the inflatable body; (2) through the second end of the air conduit, to the first end of the air conduit; and (3) to ambient. Wu disclosed all three features.

265. ***Conveying Air From The Inflatable Body.*** Wu disclosed that when the gate member 200 (the air conduit) is in the second position, the electric motor-powered blower 15 (the fan and motor assembly) causes air to be conveyed in sequence starting from air mattress 400 (the inflatable body): "When gate member 200 is in this second position, ***air is drawn out of air mattress 400*** shown in FIG. 1 and blower exhaust is expelled into the outside environment through filter 30 shown in FIG. 1 causing air mattress 400 to quickly deflate." Wu, 6:18-22 (emphasis added); *see also* ¶¶ 223-29, above; Wu '925 Application (Ex. 1066), 9:12-14.

266. To assist the Board's understanding, I have also provided a still (at time stamp 00:02) of the animation provided in Ex. 1069, below, to show that the blower 15 causes air (in light orange) to flow starting from air mattress 400 when gate member 200 (orange) in its second position.

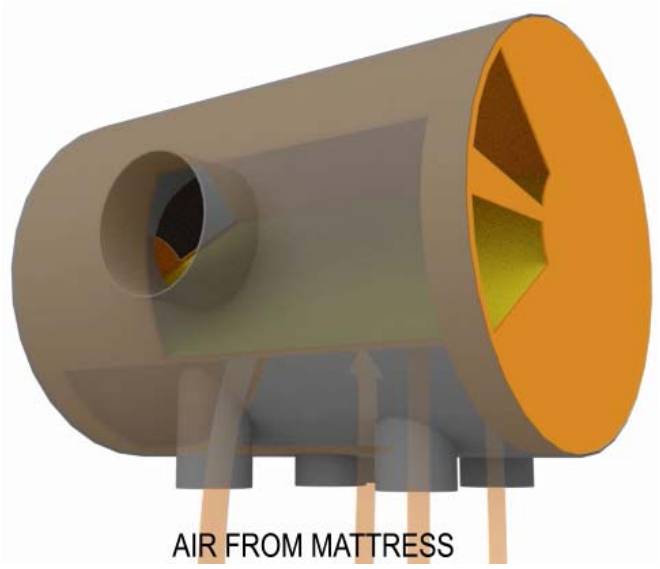

267. ***Through the Second and First Ends of the Conduit.*** From air mattress 400 (the inflatable body), Wu disclosed that air is conveyed through the second end 210 of gate member 200 (the air conduit) to the first end 212 of gate member 200 (the air conduit), as I explained above. *See* ¶¶ 260-63, above.

268. ***Air Then Flows to Ambient.*** Wu disclosed that the air then flows to ambient: "Also when gate member 200 is in the second [position], blower exhaust air passes through inlet port 110 of housing 101 and out through first ports 220 [of air conduit first end 212] ***into the outside environment***[.]" Wu, 6:14-18 (emphasis added); *see also id.* at 6:18-22 ("When gate member 200 is in this second position, air is drawn out of air mattress 400 shown in FIG. 1 and ***blower exhaust is expelled into the outside environment*** through filter 30 shown in FIG. 1 causing air mattress 400 to quickly deflate (emphasis added)). *See also* Wu '925 Application (Ex. 1066), 9:8-14.

269. To assist the Board's understanding, I have also provided a still (at time stamp 00:02) of the animation provided in Ex. 1069, below, to show that the blower 15 causes air (in light orange) to ultimately flow to the ambient when gate member 200 (orange) in its second position.

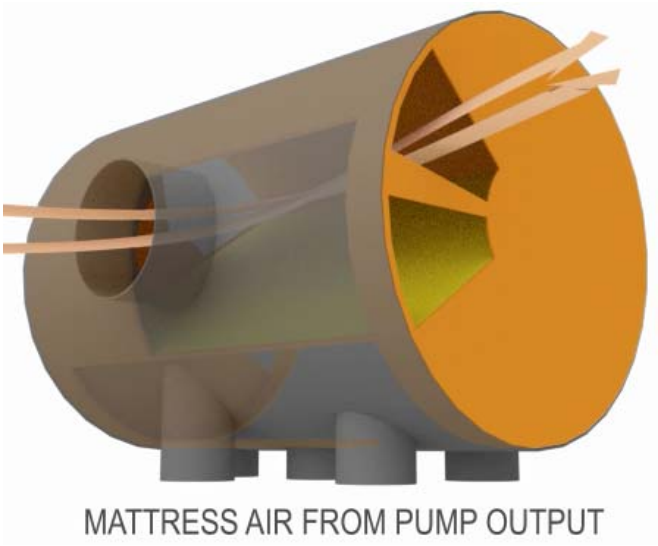

12. <u>Claim 12 – The inflatable product as claimed in claim 1, wherein the fan and motor are received in the housing.</u>

270. Wu in combination with Chaffee disclosed this limitation. As I explained above, a POSA would have been motivated to combine the pump components of Wu's system 10 with Chaffee's Housing, such that this Housing contained the Wu's pump components, including the electric motor-driven blower 15. *See* ¶¶ 189-97, above. Therefore, in combination, Wu and Chaffee disclosed that electric motor-driven blower 15 (the fan and motor) are received in Chaffee's Housing (the housing).

13. <u>Claim 16</u>

271. Claim 16 is similar to claim 1, but distinct in that it incorporates the language of dependent claims 7, 8, and 11, and omits any requirement that the air conduit be movable between a first and second position "while remaining disposed at least in part in the housing." *Compare* Ex. 1001, 8:29–32 *with* Claim 16. To demonstrate this, I have reproduced the language of claim 16 and compared it to the language of claims 1, 7, 8, and 11 in the chart below.[43]

Claim 16	Claims 1, 7, 8, 11
16. An inflatable product including: an inflatable body; a fan and motor assembly for pumping air; a housing built into the inflatable body, the housing having an interior region; and an air conduit having a first end and a second end, the air conduit disposed at least in part in the housing and arranged to convey air pumped by the fan and motor assembly, the air conduit being movable between a first position and a second position, the fan and motor inflating the inflatable body when the air	1. An inflatable product including: an inflatable body; a fan and motor assembly for pumping air; a housing built into the inflatable body, the housing having an interior region; and an air conduit disposed at least in part in the housing, the air conduit being movable between a first position and a second position while remaining disposed at least in part in the housing, the fan and motor inflating the inflatable body when the air conduit is in the first position, and deflating the

[43] For clarity, I have color-coded the language in claim 16 to show where identical language appears in claims 1, 7, 8, and 11. For example, all claim language highlighted in green in claim 16 corresponds to language that appears in claim 1.

conduit is in the first position, and deflating the inflatable body when the air conduit is in the second position; wherein air flows between the interior region of the housing and the inflatable body during inflation and deflation, and wherein the fan and motor assembly causes air to be conveyed from the first end of the air conduit to the second end of the air conduit when the air conduit is in the first position, and the fan and motor assembly causes air to be conveyed in sequence from the inflatable body, through the second end of the air conduit, to the first end of the air conduit, to ambient when the air conduit is in the second position.	inflatable body when the air conduit is in the second position; wherein air flows between the interior region of the housing and the inflatable body during inflation and deflation.
	7. The inflatable product as claimed in claim 1, wherein the air conduit is arranged to convey air pumped by the fan and motor assembly.
	8. The inflatable product as claimed in claim 7, wherein the air conduit has a first end and a second end, and wherein the fan and motor assembly causes air to be conveyed from the first end of the air conduit to the second end of the air conduit when the air conduit is in the first position.
	11. The inflatable product as claimed in claim 10, wherein the fan and motor assembly causes air to be conveyed in sequence from the inflatable body, through the second end of the air conduit, to the first end of the air conduit, to ambient when the air conduit is in the second position.

272. For this reason, my analysis for claims 1, 7, 8, and 11 is the same as my analysis of claim 16. *See* ¶¶ 177-235, 247-53, 265-70, above. For the same reasons I provided in connection with claims 1, 7, 8, and 11, claim 16 is invalid as obvious. *Id.*

14. Claim 17

273. Claim 17 depends from claim 16; however, other than the fact that it depends from a different independent claim, claim 17 is identical to claim 2. *Compare* Ex. 1001, Claim 17 *with* Claim 2. To demonstrate this, I have reproduced the language of claim 17 and compared it to the language of claim 2 in the chart below.

Claim 17	Claim 2
17. The inflatable product as claimed in claim **16,** wherein air flows from the interior region of the housing into the inflatable body when the air conduit is in the first position.	2. The inflatable product as claimed in claim **1,** wherein air flows from the interior region of the housing into the inflatable body when the air conduit is in the first position.

274. A POSA would have understood that claim 17 (and its analog, claim 2) is simply describing an inflation operation—i.e., because the "first position" of the conduit indicates inflation. For this reason, my analysis for claim 2 is the same as my analysis of claim 17. *See* ¶ 236, above. Thus, because claim 16, from which claim 17 depends, is invalid as obvious for the reasons I explained above (*see* ¶¶ 271-72, above), claim 17 is invalid as obvious for the same reasons I described above in connection with claim 2. *See* ¶ 236, above.

15. Claim 18

275. Claim 18 depends from claim 16; however, other than the fact that it depends from a different independent claim, claim 18 is identical to claim 3. *Compare* Ex. 1001, Claim 18 *with* Claim 3. To demonstrate this, I have

reproduced the language of claim 18 and compared it to the language of claim 3 in the chart below.

Claim 18	Claim 3
18. The inflatable product as claimed in claim **16,** wherein air flows from the inflatable body into the interior region of the housing when the air conduit is moved to the second position.	3. The inflatable product as claimed in claim **1,** wherein air flows from the inflatable body into the interior region of the housing when the air conduit is moved to the second position.

276. A POSA would have understood that claim 18 (and its analog, claim 3) is simply describing a deflation operation—i.e., because the "second position" of the conduit indicates deflation. For this reason, my analysis for claim 3 is the same as my analysis of claim 18. *See* ¶ 237, above. Thus, because claim 16, from which claim 18 depends, is invalid as obvious for the reasons I explained above (*see* ¶¶ 271-72, above), claim 18 is invalid as obvious for the same reasons I described above in connection with claim 3. *See* ¶ 237, above.

16. <u>Claim 19</u>

277. Claim 19 depends from claim 16; however, other than the fact that it depends from a different independent claim, claim 19 is identical to claim 4. *Compare* Ex. 1001, Claim 19 *with* Claim 4. To demonstrate this, I have reproduced the language of claim 19 and compared it to the language of claim 4 in the chart below.

Claim 19	Claim 4
19. The inflatable product as claimed in claim **16,** wherein the air conduit is a pipe.	4. The inflatable product as claimed in claim **1,** wherein the air conduit is a pipe.

278. For this reason, my analysis for claim 4 is the same as my analysis of claim 19. *See* ¶¶ 238-42, above. Thus, because claim 16, from which claim 19 depends, is invalid as obvious for the reasons I explained above (*see* ¶¶ 271-72, above), claim 19 is invalid as obvious for the same reasons I described above in connection with claim 4. *See* ¶¶ 238-42, above.

17. <u>Claim 20</u>

279. Claim 20 depends from claim 19 which depends from claim 16; however, other than the fact that it depends from different claims, claim 20 is identical to claim 5. *Compare* Ex. 1001, Claim 20 *with* Claim 5. To demonstrate this, I have reproduced the language of claim 20 and compared it to the language of claim 5 in the chart below.

Claim 20	Claim 5
20. The inflatable product as claimed in claim **19,** wherein the pipe is rotatable.	5. The inflatable product as claimed in claim **4,** wherein the pipe is rotatable.

280. For this reason, my analysis for claim 5 is the same as my analysis of claim 20. *See* ¶¶ 243-44, above. Thus, because claims 16 and 19, from which claim 20 depends, are invalid as obvious for the reasons I explained above (*see* ¶¶ 271-72, 277-78, above), claim 20 is invalid as obvious for the same reasons I described above in connection with claim 5. *See* ¶¶ 243-44, above.

18. Claim 21

281. Claim 21 depends from claim 19 which depends from claim 16; however, other than the fact that it depends from different claims, claim 21 is identical to claim 6. *Compare* Ex. 1001, Claim 21 *with* Claim 6. To demonstrate this, I have reproduced the language of claim 21 and compared it to the language of claim 6 in the chart below.

Claim 21	Claim 6
20. The inflatable product as claimed in claim **19,** wherein the pipe is a switching pipe.	5. The inflatable product as claimed in claim **4,** wherein the pipe is a switching pipe.

282. For this reason, analysis for claim 6 is the same as my analysis of claim 21. *See* ¶¶ 245-46, above. Thus, because claims 16 and 19, from which claim 21 depends, are invalid as obvious for the reasons I explained above (*see* ¶¶ 271-72, 277-78, above), claim 21 is invalid as obvious for the same reasons I described above in connection with claim 6. *See* ¶¶ 245-46, above.

19. Claim 22

283. Claim 22 depends from claim 16; however, other than the fact that it depends from a different independent claim, claim 22 is identical to claim 9. *Compare* Ex. 1001, Claim 22 *with* Claim 9. To demonstrate this, I have reproduced the language of claim 22 and compared it to the language of claim 9 in the chart below.

Claim 22	Claim 9
22. The inflatable product as claimed in claim **16,** wherein the fan and motor assembly causes air to be conveyed in sequence from ambient, through the first end of the air conduit, to the second end of the air conduit, and into the inflatable body when the air conduit is in the first position.	9. The inflatable product as claimed in claim **8,** wherein the fan and motor assembly causes air to be conveyed in sequence from ambient, through the first end of the air conduit, to the second end of the air conduit, and into the inflatable body when the air conduit is in the first position.

284. For this reason, my analysis for claim 9 is the same as my analysis of claim 22. *See* ¶¶ 254-59, above. Thus, because claim 16, from which claim 22 depends, is invalid as obvious for the reasons I explained above (*see* ¶¶ 271-72, above), claim 22 is invalid as obvious for the same reasons I described above in connection with claim 9. *See* ¶¶ 254-59, above.

20. <u>Claim 23</u>

285. Claim 23 depends from claim 16; however, other than the fact that it depends from a different independent claim, claim 23 is identical to claim 12. *Compare* Ex. 1001, Claim 23 *with* Claim 12. To demonstrate this, I have reproduced the language of claim 23 and compared it to the language of claim 12 in the chart below.

Claim 23	Claim 12
23. The inflatable product as claimed in claim **16,** wherein the fan and motor are received in the housing.	12. The inflatable product as claimed in claim **1,** wherein the fan and motor are received in the housing.

286. For this reason, my analysis for claim 12 is the same as my analysis of claim 23. *See* ¶ 270, above. Thus, because claim 16, from which claim 23

depends, is invalid as obvious for the reasons I explained above (*see* ¶¶ 271-72, above), claim 23 is invalid as obvious for the same reasons I described above in connection with claim 12. *See* ¶ 270, above.

B. <u>Ground 2</u>

287. The Challenged Claims are unpatentable as obvious under § 103 in view of Wu in combination with Goldsmith.

288. In the context of the design features and their corresponding design options for achieving those features—which, as I described above, a POSA would have understood and would have been focusing on as of the Priority Date (*see* § VI.B, above)—the Challenged Claims generally cover: (1) a motorized pump; (2) a pump layout having some of the pump components in the housing (e.g. claims 1-11, 16-22) or all of the components in the housing (e.g., claims 12 and 23); (3) a pump location that is built into the inflatable body; and (4) a power inflate/power deflate, Uni-Directional Pump Assembly. *See* Table 2, above.

289. As I discussed above, Wu disclosed several of the claimed features (*see* green highlighting) but not all (*see* red highlighting). *Compare* Table 2 *with* Table 3-A, above.

Design Feature	Design Option #1	Design Option #2	Design Option #3
1. Pump power	Manual	Motorized	--
2. Pump layout	Components uncontained	Components partially contained in housing	Components contained in housing
3. Pump location	External to inflatable body	Built into inflatable body	Built into inflatable body and recessed
4. Inflatable product flow control	Power inflate, vent deflate	Power inflate, power deflate via Reversible Pump Assembly	Power inflate, power deflate via Uni-directional Pump Assembly

Comparison of Table 2 with Table 3-A

290. However, as I explain in more detail, below, a POSA would have found these missing claimed designs to be supplied by Goldsmith, such that, in combination, Wu and Goldsmith disclose all of the claimed features:

Design Feature	Design Option #1	Design Option #2	Design Option #3
1. Pump power	Manual	Motorized	--
2. Pump layout	Components uncontained	Components partially contained in housing	Components contained in housing
3. Pump	External to	Built into inflatable	Built into inflatable

location	inflatable body	body[44]	body and recessed
4. Inflatable product flow control	Power inflate, vent deflate	Power inflate, power deflate via Reversible Pump Assembly	Power inflate, power deflate via Uni-directional Pump Assembly

Comparison of Table 2 with Tables 3-A and 3-C

291. Furthermore, as I explain in more detail below, a POSA would have been motivated by several of the design factors that were well-known as of the Priority Date (*see* § VI.B, above) to combine the teachings of Wu with Goldsmith, including, for example, because the resulting combination would have: increased efficiency (of time and labor), increased spatial efficiency, enhanced durability, decreased manufacturing costs, and led to additional marketability and cost advantages.

1. <u>Ground 2 is not redundant of Ground 1</u>

292. Ground 2 is not redundant of Ground 1. In particular, my Ground 2 analysis is based, in part, on a wholly distinct reference—Goldsmith. Further, Goldsmith's disclosure of a housing and how that housing is built into an inflatable body is distinct from Chaffee's relevant disclosure. *Compare* ¶¶ 189-212, above,

[44] As I explained above, and will explain in more detail, below, Goldsmith disclosed a pump design built into an inflatable body and recessed. However, this design also covers a design that is merely built into an inflatable body, as recited in the Challenged Claims.

with ¶¶ 295-301, below. Specifically, Goldsmith's housing 47 teaching is distinct from Chaffee's Housing teaching (which includes a flange 82 with a wall 83), and Goldsmith's housing 47 is riveted to the mattress rather than being adhered or heat sealed (as Chaffee disclosed). *Id.*

2. <u>Claim 1</u>

293. My analysis of claim 1 for Ground 1, above, is identical to my analysis of claim 1 for Ground 2, except with respect to the following limitations:

- ***a housing built into the inflatable body, the housing having an interior region;***
- ***an air conduit disposed at least in part in the housing, the air conduit being movable between a first position and a second position while remaining disposed at least in part in the housing,***
- ***wherein air flows between the interior region of the housing and the inflatable body during inflation and deflation.***

294. For the other remaining limitations, as I did with Ground 1, here in Ground 2 I again rely on Wu to supply the remaining limitations. Therefore, I hereby rely on my analysis above for those limitations. *See* ¶¶ 177-86, 218-22, 225-30, above.

a housing built into the inflatable body, the housing having an interior region;

295. This limitation contains two features: (1) a housing having an interior region; (2) the housing being built into the inflatable body. Goldsmith disclosed both features.

296. ***Housing having an interior region.*** Goldsmith disclosed a housing having an interior region. Referring to Figure 1, below, Goldsmith disclosed an "air distributing chamber" 21 for a mattress 11. Goldsmith (Ex. 1007), 1:26-30.

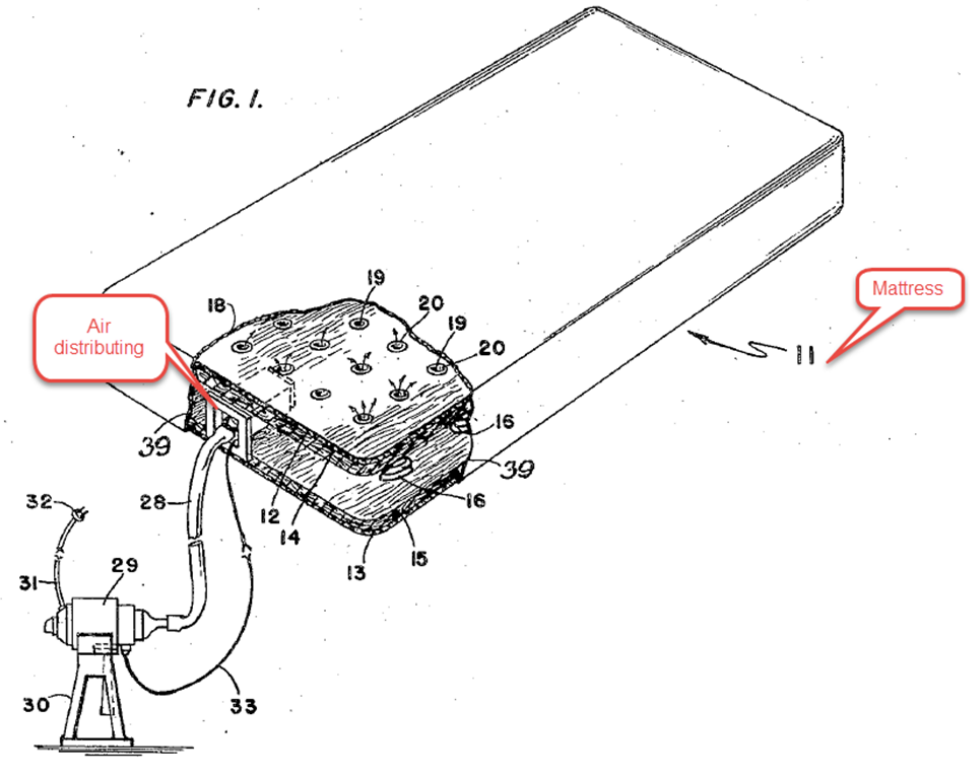

Ex. 1007, Fig. 1.

297. Referring to Figure 6, below, in a different embodiment, Goldsmith disclosed an "air distributing chamber" having an interior region containing "a motor 39' [blue], fan 40 [green]. . . in a distribution casing 42." Goldsmith (Ex. 1007), 2:54-55, 4:1-5. A POSA would have understood that the distribution casing 42 is a housing. Thus, Goldsmith disclosed a housing (casing 42) having an interior region.

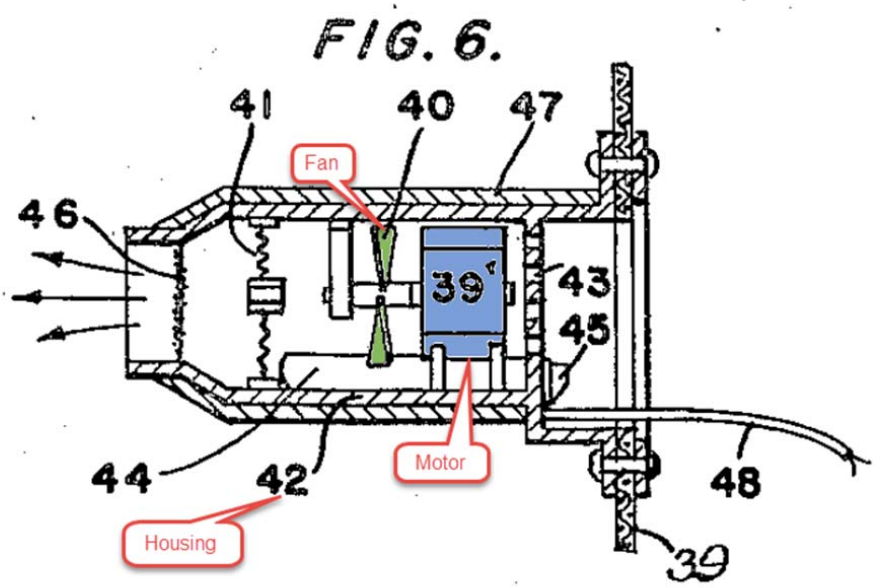

Ex. 1007, Fig. 6.

298. As of the Priority Date, a POSA would have been motivated to apply Goldsmith's teaching using a distribution casing 42 (i.e., the housing) with the pump components of Wu's system 10 such that the rotary valve 100 (and, thus, movable gate member 200) and electric motor-driven blower 15 in Wu are similarly disposed within a housing for multiple reasons.

299. These reasons mirror the reasons I provided in connection with Ground 1, above, including, for instance, increased spatial efficiency, enhanced durability, decreased manufacturing costs, and the fact that Wu is silent regarding how the pump components of Wu's system 10 (such as rotary valve 100 and

blower 15) structurally interface with one another. *See* ¶¶ 193-97, above. And, to the extent necessary, a POSA would have known how to apply Goldsmith's teachings to accommodate Wu's pump components within a similar housing.

300. ***Housing built into the inflatable body***. Goldsmith disclosed that this casing 42 (the housing) is built into an air compartment. Specifically, and referring again to Figure 6, below, Goldsmith disclosed that the "air distributing chamber" casing 42 is "mounted or attached to the mattress" air compartment walls 39 (orange) by "rivets [] or by other suitable means" and recessed therein via distribution casing 42 (the housing). *See* Goldsmith (Ex. 1007), 2:54-55, 4:1-5. A POSA would have understood Goldsmith's casing 42 to be built in, as rivets are permanent connections and "other suitable means" implies similar permanent connections. *See id.*; *see* ¶ 201, above.

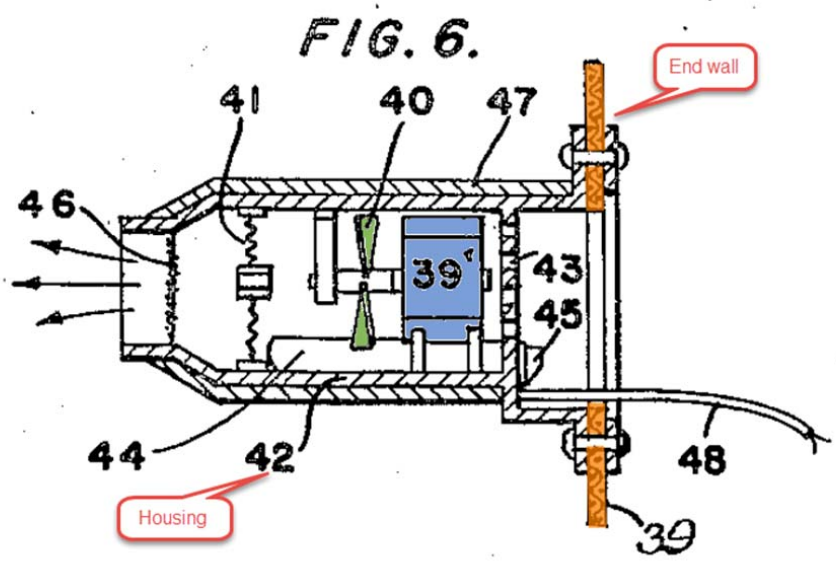

Ex. 1007, Fig. 6.

301. As I explained above, a POSA would have had numerous reasons for containing the pump components of Wu with a built in housing, as disclosed in Goldsmith, such that Wu's housing contained pump structure was built in air mattress 400. Each of the reasons I provided above are equally applicable here, including, for instance, it was more time and labor efficient, increased spatial efficiency (particularly because Goldsmith's casing is disclosed as being flush with the mattress wall; *see* Fig. 6, above), enhanced durability, led to additional marketability and cost advantages, and the fact that Wu is silent regarding how the pump components structurally interface with air mattress 400. *See* ¶¶ 204-12,

above. For example, a POSA would have recognized the built in design to be more time- and labor-efficient—which, as I explained above (*see* § VI.B, above), is one of the five key design factors a POSA would have considered—as it enhanced user convenience. Specifically, it was well-known at the time that built-in designs, like that disclosed in Goldsmith, had been touted as eliminating the need for "owners [to] carry the pump in order to inflate the air mattress," Chen (Ex. 1052), 1:38-40. As one prior art reference put it, built-in pump designs meant that users had "[n]o more need to get an air pump." Parienti (Ex. 1008), 1:25-26; *see also id.*at Fig. 1; Chaffee (Ex. 1006) 1:19 (explaining that "portability is desired"); Goldsmith (Ex. 1007), Fig. 6, 4:1-15 (explaining that "no outside unit is necessary" with a built-in design); n.17, above. And, to the extent the Board finds that Wu's multi-chamber air mattress 400 constitutes the inflatable body (rather than the single-chamber constant pressure mattress I described above), a POSA would have known how to connect the various 112 supply ports to those chambers in a built-in design.

an air conduit disposed at least in part in the housing, the air conduit being movable between a first position and a second position while remaining disposed at least in part in the housing,

302. This limitation contains two components: (1) an air conduit (which Wu disclosed; *see* ¶¶ 214-15, above) being disposed at least in part in the housing; (2) the air conduit being movable between a first position and a second position

while remaining disposed at least in part in the housing. Wu in combination with Goldsmith disclosed both components.

303. ***Movable air conduit at least partially disposed in housing.*** As I explained above, Wu disclosed a movable air conduit in the form of gate member 200. *See* ¶¶ 214-15, above. As I also explained above, in combination with Goldsmith, Wu's rotary valve 100, which includes gate member 200, would be contained in a housing as taught by Goldsmith (e.g., similar to Goldsmith's casing 42). *See* ¶¶ 295-99, above. Thus, in combination with Goldsmith, Wu's gate member 200 (the air conduit) would be disposed in the housing.

304. ***Air conduit movable between a first position and second position while remaining disposed at least in part in the housing***. As I explained above, Wu disclosed an air conduit in the form of gate member 200 that is movable between a first position (for inflation) and a second position (for deflation). *See* ¶¶ 217-29, above. As I also explained above, in combination with Goldsmith, Wu's rotary valve 100, which includes gate member 200, would be contained in the housing, as taught by Goldsmith. *See* ¶¶ 295-301, above. Thus, in combination with Goldsmith, Wu's gate member 200 (the air conduit) is movable between a first position and second position while remaining disposed at least in part in the housing.

wherein air flows between the interior region of the housing and the inflatable body during inflation and deflation.

305. When the pump components of Wu are contained within casing 42 of Goldsmith, air flows between the interior region of the casing 42 (the housing) and the air mattress 400 (the inflatable body) during inflation and deflation. As I explained in connection with Ground 1, air flows through gate member 200 of Wu during inflation and deflation. *See* ¶¶ 217-29, above. When combined, rotary valve 100 (and, thus, gate member 200) of Wu is disposed within the interior region of the housing as taught by Goldsmith. *See* ¶¶ 295-301, above. Because air flows through gate member 200 of Wu during inflation and deflation and gate member 200 of Wu is disposed within the housing—as shown in Figure 1, below, when gate member 200 is in its first, inflating position—air flows through the interior region of the housing during inflation and deflation. *See, e.g.,* Wu (Ex. 1005), Fig. 1; *see also* Exs. 1068, 1069. *See also* Wu '925 Application, Figure 1.

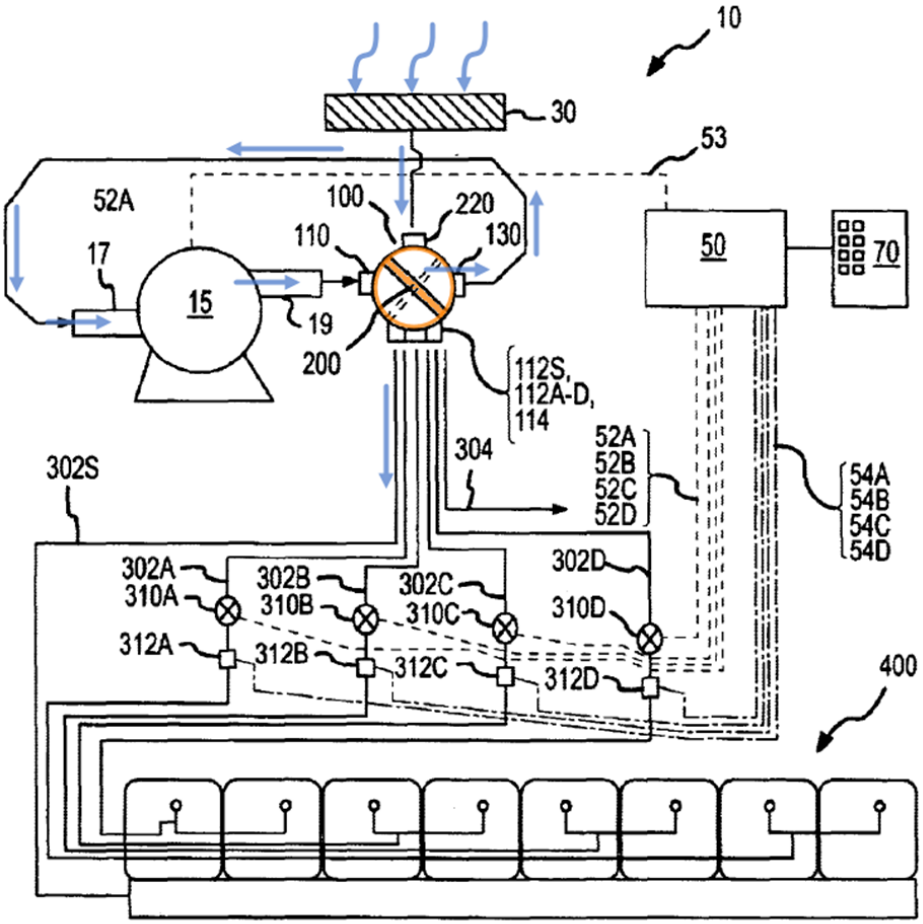

FIG.1

Ex. 1005, Fig. 1.

3. **<u>Claim 2 – The inflatable product as claimed in claim 1, wherein air flows from the interior region of the housing into the inflatable body when the air conduit is in the first position</u>** / **<u>Claim 3 – The inflatable product as claimed in claim 1, wherein air flows from the inflatable body into the interior region of the housing when the air conduit is moved to the second position.</u>**

306. Claims 2 and 3 both require air to flow through the interior region of the housing. Specifically, claim 2 requires that "air flows from the interior region of the housing into the inflatable body when the air conduit is in the first position," and claim 3 requires that "air flows from the inflatable body into the interior region of the housing when the air conduit is moved to the second position." As I explained above, these claims are merely claiming what a POSA understood to be an inflation operation (claim 2) and a deflation operation (claim 3). In combination, Wu and Goldsmith disclosed these limitations.

307. As I explained in connection with claim 2 of Ground 1, air flows from gate member 200 of Wu to air mattress 400 during inflation. *See* ¶¶ 231-33, above. When combined with Goldsmith, gate member 200 of Wu is disposed within a housing as taught by Goldsmith. *See* ¶¶ 295-301, above. Therefore, in combination, air flows from the interior region of the housing into Wu's air mattress 400 when gate member 200 is in the first position.

308. Similarly, as I explained in connection with claim 3 of Ground 1, air flows from air mattress 400 to gate member 200 of Wu during deflation. *See* ¶¶ 231, 234-35, above. When combined with Goldsmith, gate member 200 of Wu is disposed within the housing as taught by Goldsmith. *See* ¶¶ 295-301, above. Therefore, in combination, air flows from Wu's air mattress 400 to the interior region of the housing when gate member 200 is in the second position.

4. Claims 4-11

309. As discussed above in Ground 1 for claims 4-11, I rely solely on the disclosure in Wu to satisfy these claims. *See* ¶¶ 238-69, above. Therefore, my analysis of claims 4-11 for Ground 1, above, is identical to my analysis of claims 4-11 for Ground 2, and, as a result, I rely on that analysis for my analysis here. *See id*.

5. Claim 12 – The inflatable product as claimed in claim 1, wherein the fan and motor are received in the housing.

310. Wu in combination with Goldsmith disclosed this limitation. As I explained above, a POSA would have been motivated to combine the pump components of Wu's system 10 with Goldsmith's teaching, such that a housing (similar to casing 42 of Goldsmith) contained Wu's rotary valve 100 ***and electric motor-driven blower 15***. *See* ¶¶ 295-301, above. Therefore, in combination, Wu and Goldsmith disclosed that electric motor-driven blower 15 (the fan and motor) are received in the housing.

6. Claim 16

311. As I explained in connection with Ground 1, above, claim 16 recites identical language to claims 1, 7, 8, and 11. *See* ¶¶ 271-72, above. For this reason, I rely on my analysis for claims 1, 7, 8, and 11, above, for my analysis of claim 16 here. *See* ¶¶ 293-305, 309, above. For the same reasons I provided in connection with claims 1, 7, 8, and 11, above—including, in particular, the reasons a POSA

would have combined Wu and Goldsmith (*see* ¶¶ 295-301, above)—claim 16 is invalid as obvious.

7. Claims 17-23

312. As I explained in connection with Ground 1, above, claims 17-23 recite identical language to claims 2-6, 9, and 12. *See* ¶¶ 273, 275, 277, 279, 281, 283, 285, above. For this reason, I hereby incorporate by reference my analysis for claims 2-6, 9, and 12, above, for my analysis of claims 17-23. *See* ¶¶ 306-10, above. For the same reasons I provided in connection with claims 2-6, 9, and 12, above—including, in particular, the reasons a POSA would have combined Wu with Goldsmith (*see* ¶¶ 295-301, above)—claims 17-23 are invalid as obvious.

C. Ground 3

313. The Challenged Claims are unpatentable as obvious under § 103 in view of Wu in combination with Parienti.

314. In the context of the design features and their corresponding design options for achieving those features—which, as I described above, a POSA would have understood and would have been focusing on as of the Priority Date (*see* § IV.B, above)—the Challenged Claims generally cover: (1) a motorized pump; (2) a pump layout having some of the pump components in the housing (e.g. claims 1-11, 16-22) or all of the components in the housing (e.g., claims 12 and 23); (3) a

pump location that is built into the inflatable body; and (4) a power inflate/power deflate, Uni-Directional Pump Assembly. *See* Table 2, above.

315. As I discussed above, Wu disclosed several of the claimed features (*see* green highlighting) but not all (*see* red highlighting). *Compare* Table 2 *with* Table 3-A, above.

Design Feature	Design Option #1	Design Option #2	Design Option #3
1. Pump power	Manual	Motorized	--
2. Pump layout	Components uncontained	Components partially contained in housing	Components contained in housing
3. Pump location	External to inflatable body	Built into inflatable body	Built into inflatable body and recessed
4. Inflatable product flow control	Power inflate, vent deflate	Power inflate, power deflate via Reversible Pump Assembly	Power inflate, power deflate via Uni-directional Pump Assembly

Comparison of Table 2 with Table 3-A

316. However, as I explain in more detail, below, a POSA would have found these missing claimed designs to be supplied by Parienti, such that, in combination, Wu and Parienti disclose all of the claimed features:

Design Feature	Design Option #1	Design Option #2	Design Option #3
1. Pump power	Manual	Motorized	--
2. Pump layout	Components uncontained	Components partially contained in housing	Components contained in housing
3. Pump	External to	Built into inflatable	Built into inflatable

location	inflatable body	body	body and recessed
4. Inflatable product flow control	Power inflate, vent deflate	Power inflate, power deflate via Reversible Pump Assembly	Power inflate, power deflate via Uni-directional Pump Assembly

Comparison of Table 2 with Tables 3-A and 3-D

317. Furthermore, as I explain in more detail below, a POSA would have been motivated by several of the design factors that were well-known as of the Priority Date (*see* § IV.B, above) to combine the teachings of Wu with Parienti, including, for example, because the resulting combination would have: increased efficiency (of time and labor), increased spatial efficiency, enhanced durability, decreased manufacturing costs, and led to additional marketability and cost advantages.

1. <u>Ground 3 is not redundant of Grounds 1 or 2</u>

318. Ground 3 is not redundant of Grounds 1 or 2. In particular, my Ground 3 analysis is based, in part, on a wholly distinct reference—Parienti. Further, Parienti's disclosure of a housing and how that housing is built into an inflatable body is distinct from Chaffee's and Goldsmith's relevant disclosure. Specifically, Parienti's housing teaching is distinct from Chaffee's Housing (which includes a flange 82 with a wall 83) teaching, and Parienti's housing teaching is glued to the mattress rather than being riveted (as Goldsmith teaches). *Compare* ¶¶ 189-212, 295-301, above, *with* ¶¶ 323-29, below.

2. <u>Claim 1</u>

319. My analysis of claim 1 for Ground 1, above, is identical to my analysis of claim 1 for Ground 3, except with respect to the following limitations:

- ***an inflatable body;***
- ***a housing built into the inflatable body, the housing having an interior region;***
- ***an air conduit disposed at least in part in the housing, the air conduit being movable between a first position and a second position while remaining disposed at least in part in the housing,***
- ***wherein air flows between the interior region of the housing and the inflatable body during inflation and deflation.***

320. For the other remaining limitations, as I did with Ground 1, here in Ground 3 I again rely on Wu to supply the remaining limitation. Therefore, I hereby incorporate my above analysis by reference. *See* ¶¶ 177-86, 218-22, 225-30, above.

an inflatable body;

321. As explained above, Wu discloses an inflatable body in the form of air mattress 400 or, alternatively, a "constant air pressure mattress." To the extent the Board finds that "inflatable body" has a substantially airtight requirement and that Wu's alternative "constant air pressure mattress" does not satisfy this limitation, a POSA would have found it obvious in view of Parienti's inflatable mattress 5. Parienti disclosed "an ***inflatable mattress*** [5] and an associated device [orange] for automatic inflating and deflating of the mattress." Parienti (Ex. 1008), 1:22-24

(emphasis added). A POSA would have understood Parienti's inflatable mattress 5 to be a substantially airtight structure, as it is intended for recreational purposes. *Id.*, 1:8-19.

322. In view of Wu's teaching that "system 10 is ***highly versatile*** and can be used to supply air to ***various types of air mattresses***[,]" including a "constant air pressure mattress." a POSA would have found it obvious to use the pump components of Wu's system 10 with a substantially airtight mattress, such as Parienti's inflatable mattress 5. Wu (Ex. 1005), 4:44-47 (emphasis added); *see also* Wu '925 Application (Ex. 1066), 7:4-6.

a housing built into the inflatable body, the housing having an interior region;

323. This limitation contains two features: (1) a housing having an interior region; (2) the housing being built into the inflatable body. Parienti disclosed both features.

324. ***Housing having an interior region.*** Parienti disclosed a housing having an interior region. Referring to Figure 1, below, Parienti disclosed an "inflatable mattress [5] and an associated device [an air pump] [orange] for automatic inflating and deflating of the mattress." Parienti (Ex. 1008), 1:22-24.

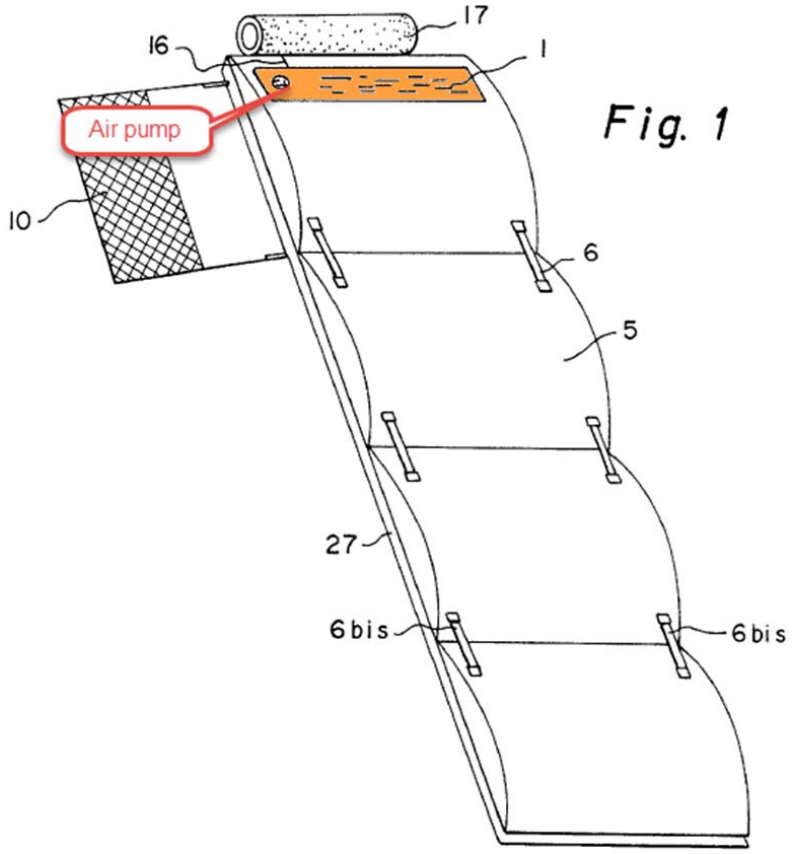

325. Referring to Figure 5, below, Parienti disclosed that this air pump device included a housing (orange) with an interior region, as it contained a motor 2 and turbine 4 (not shown) and included a protective grid 8 and switch 3 for operating the device in inflate, deflate, and stop modes. Parienti, 2:55-3:6; *see also id.* at Figs. 4 and 7. Thus, Parienti disclosed a housing 42 having an interior region.

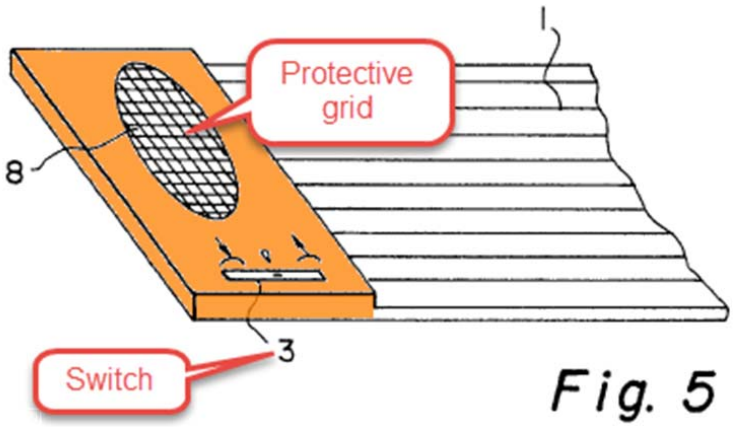

Ex. 1008, Fig. 5.

326. As of the Priority Date, a POSA would have been motivated to apply Parienti's housing teaching with the pump components of Wu's system 10 such that the rotary valve 100 (and, thus, movable gate member 200) and electric motor-driven blower 15 in Wu were disposed inside a housing (similar to Parienti's housing) for multiple reasons.

327. These reasons mirror the reasons I provided in connection with Ground 1, above, including, for instance, increased spatial efficiency, enhanced durability, decreased manufacturing costs, and the fact that Wu is silent regarding how the pump components of Wu's system 10 (such as rotary valve 100 and blower 15) structurally interface with one another. *See* ¶¶ 193-97, above. And, to the extent necessary, a POSA would have known how to apply Parienti's housing teachings to accommodate Wu's pump components within a similar housing.

328. ***Housing built into the inflatable body***. Parienti disclosed that its housing is built into an inflatable body. Specifically, and referring again to Figure 1, below, Parienti disclosed that the air pump device is "made ***interdependent*** with the mattress [5] by means of ***gluing*** or any other means." *See* Parienti (Ex. 1008), 1:24-25 (emphases added). A POSA would have understood that making the housing of Parienti's pump device "interdependent" with the mattress by "gluing or any other means" would have resulted in the pump housing as built into the inflatable mattress, as these are both permanent means of connection. *See* ¶ 201, above.

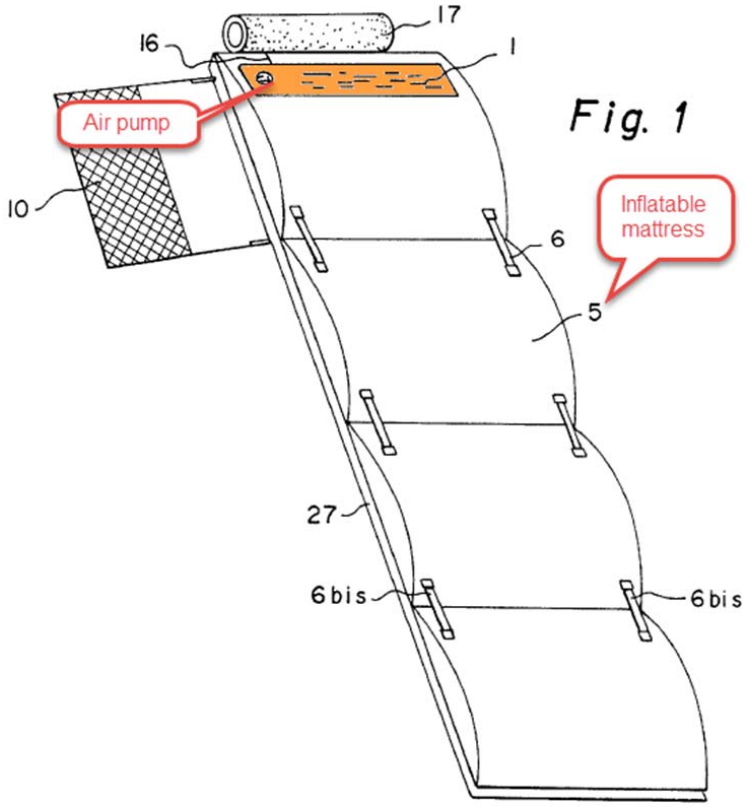

Ex. 1008, Fig. 1.

329. As I explained above, a POSA would have had numerous reasons for containing the pump components of Wu with a built in housing, as disclosed in Parienti, such that Wu's housing contained pump structure was built in air mattress 400. Each of the reasons I provided above are equally applicable here, including, for instance, it was more time and labor efficient, increased spatial efficiency, enhanced durability, led to additional marketability and cost advantages, and the fact that Wu is silent regarding how the pump components structurally interface with air mattress 400. *See* ¶¶ 204-12, above. For example, a POSA would have recognized the built in design to be more time- and labor-efficient—which, as I explained above (*see* § VI.B, above), is one of the five key design factors a POSA would have considered—as it enhanced user convenience. Specifically, it was well-known at the time that built-in designs, like that disclosed in Parienti, had been touted as eliminating the need for "owners [to] carry the pump in order to inflate the air mattress," Chen (Ex. 1052), 1:38-40. As one prior art reference put it, built-in pump designs meant that users had "[n]o more need to get an air pump." Parienti (Ex. 1008), 1:25-26; *see also id.*at Fig. 1; Chaffee (Ex. 1006) 1:19 (explaining that "portability is desired"); Goldsmith (Ex. 1007), Fig. 6, 4:1-15 (explaining that "no outside unit is necessary" with a built-in design); n.17, above. And, to the extent the Board finds that Wu's multi-chamber air mattress 400 constitutes the inflatable body (rather than Wu's single-chamber constant pressure

mattress or Parienti's inflatable mattress 5, as I described above), a POSA would have known how to connect the various 112 supply ports to those chambers in a built-in design.

an air conduit disposed at least in part in the housing, the air conduit being movable between a first position and a second position while remaining disposed at least in part in the housing,

330. This limitation contains two features: (1) an air conduit (which Wu disclosed; *see* ¶¶ 214-15, above) being disposed at least in part in the housing; (2) the air conduit being movable between a first position and a second position while remaining disposed at least in part in the housing. Wu in combination with Parienti disclosed both features.

331. ***Movable air conduit at least partially disposed in housing.*** As I explained above, Wu disclosed a movable air conduit in the form of gate member 200. *See* ¶¶ 214-15, above. As I also explained above, in combination with Parienti, Wu's rotary valve 100 (which includes gate member 200) would be contained in the housing, such as taught by Parienti's housing. *See* ¶¶ 323-29, above. Thus, in combination with Parienti, Wu's gate member 200 (the air conduit) is disposed in the housing.

332. ***Air conduit movable between a first position and second position while remaining disposed at least in part in the housing***. As I explained above, Wu disclosed an air conduit in the form of gate member 200 that is movable

between a first position (for inflation) and a second position (for deflation). *See* ¶¶ 217-29, above. As I also explained above, in combination with Parienti, Wu's rotary valve 100, which includes gate member 200, would be contained in the housing, such as taught by Parienti's housing. *See* ¶¶ 323-29, above. Thus, in combination with Parienti, Wu's gate member 200 (the air conduit) is movable between a first position and second position while remaining disposed at least in part in the housing.

wherein air flows between the interior region of the housing and the inflatable body during inflation and deflation.

333. When the pump components of Wu are contained within the housing as taught by Parienti, air flows between the interior region of the housing and the air mattress 400 (the inflatable body) during inflation and deflation. As I explained in connection with Ground 1, air flows through gate member 200 of Wu during inflation and deflation. *See* ¶¶ 217-29, above. When combined, rotary valve 100 (and, thus, gate member 200) of Wu is disposed within the interior region of the housing as taught by Parienti. *See* ¶¶ 323-29, above. Because air flows through gate member 200 of Wu during inflation and deflation—as shown in Figure 1, below, when gate member 200 is in its first, inflating position—and gate member 200 of Wu is disposed within the housing, air flows through the interior region of the housing during inflation and deflation. *See, e.g.,* Wu (Ex. 1005), Figure 1; *see also* Exs. 1068, 1069. *See also* Wu '925 Application, Figure 1.

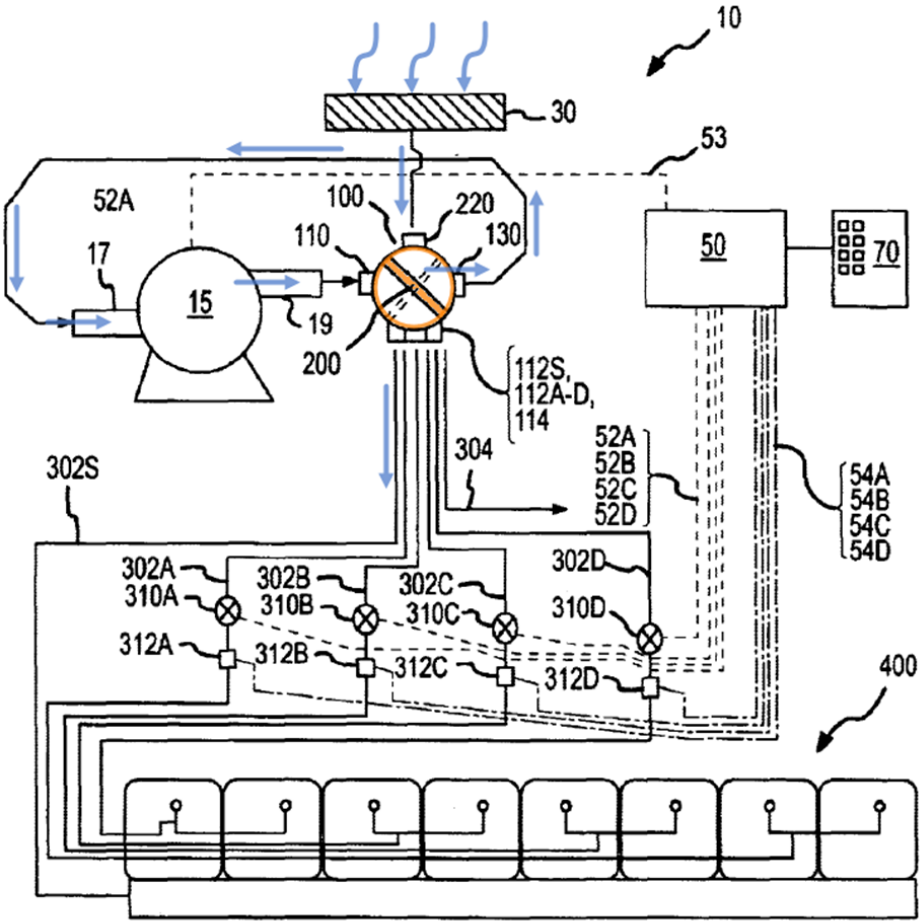

FIG.1

Ex. 1005, Fig. 1.

3. **<u>Claim 2 – The inflatable product as claimed in claim 1, wherein air flows from the interior region of the housing into the inflatable body when the air conduit is in the first position</u>** / **<u>Claim 3 – The inflatable product as claimed in claim 1, wherein air flows from the inflatable body into the interior region of the housing when the air conduit is moved to the second position.</u>**

334. Claims 2 and 3 both require air to flow through the interior region of the housing. Specifically, claim 2 requires that "air flows from the interior region of the housing into the inflatable body when the air conduit is in the first position," and claim 3 requires that "air flows from the inflatable body into the interior region of the housing when the air conduit is moved to the second position." In combination, Wu and Parienti disclosed these limitations.

335. As I explained in connection with claim 2 of Ground 1, air flows from gate member 200 of Wu to air mattress 400 during inflation. *See* ¶¶ 231-33, above. When combined with Parienti, gate member 200 of Wu is disposed within a housing as taught by Parienti. *See* ¶¶ 323-29, above. Therefore, in combination, air flows from the interior region of the housing into air mattress 400 when gate member 200 is in the first position.

336. Similarly, as I explained in connection with claim 3 of Ground 1, air flows from air mattress 400 to gate member 200 of Wu during deflation. *See* ¶¶ 231, 234-35, above. When combined with Parienti, gate member 200 of Wu is disposed within the housing as taught by Parienti. *See* ¶¶ 323-29, above. Therefore, in combination, air flows from the air mattress 400 to interior region of the housing when gate member 200 is in the second position.

4. <u>Claims 4-11</u>

337. As discussed above in Ground 1 for claims 4-11, I rely solely on the disclosure in Wu to satisfy these claims. *See* ¶¶ 238-69, above. Therefore, my analysis of claims 4-11for Ground 1, above, is identical to my analysis of claims 4-11 for Ground 3, and, as a result, I rely on that analysis for my analysis here. *See id*.

5. <u>Claim 12 – The inflatable product as claimed in claim 1, wherein the fan and motor are received in the housing.</u>

338. Wu in combination with Parienti disclosed this limitation. As I explained above, a POSA would have been motivated to combine the pump components of Wu's system 10 with Parienti's housing teaching, such that a housing (similar to Parienti's housing) contained Wu's rotary valve 100 ***and electric motor-driven blower 15***. *See* ¶¶ 323-29, above. Therefore, in combination, Wu and Parienti disclosed that electric motor-driven blower 15 (the fan and motor) are received in the housing.

6. <u>Claim 16</u>

339. As I explained in connection with Ground 1, above, claim 16 recites identical language to claims 1, 7, 8, and 11. *See* ¶¶ 271-72, above. For this reason, I hereby incorporate by reference my analysis for claims 1, 7, 8, and 11, above, for my analysis of claim 16. *See* ¶¶ 319-33, 337, above. For the same reasons I provided in connection with claims 1, 7, 8, and 11, above—including, in particular,

the reasons a POSA would have combined Wu and Parienti (*see* ¶¶ 323-29, above)—claim 16 is invalid as obvious.

7. Claims 17-23

340. As I explained in connection with Ground 1, above, claims 17-23 recite identical language to claims 2-6, 9, and 12. *See* ¶¶ 273, 275, 277, 279, 281, 283, 285, above. For this reason, I hereby incorporate by reference my analysis for claims 2-6, 9, and 12, above, for my analysis of claims 17-23. *See* ¶¶ 334-38, above. For the same reasons I provided in connection with claims 2-6, 9, and 12, above—including, in particular, the reasons a POSA would have combined Wu with Parienti (*see* ¶¶ 323-29, above)—claims 17-23 are invalid as obvious.

D. Ground 4

341. The Challenged Claims are unpatentable as obvious under § 103 in view of Ground 2 (Wu in combination with Goldsmith) in further combination with Chaffee.

1. Ground 4 is not redundant of Grounds 1-3

342. Ground 4 is not redundant of Grounds 1-3. I provide my Ground 4 analysis as an alternative to Ground 2 and only to the extent that: (1) the Board construes "inflatable body" to mean a substantially airtight structure that expands when filled with air or other gases; and (2) the Board determines that Wu does not

disclose such a structure, despite my analysis to the contrary above. *See* ¶¶ 180-84, above.

2. Challenged Claims

343. Therefore, my analysis of the Challenged Claims for Ground 2, above, is identical to my analysis of the Challenged Claims for Ground 4, except with respect to the following limitations:

- ***an inflatable body;***

344. To the extent the Board finds that "inflatable body" has a substantially airtight requirement (which, in my opinion, would be contrary to a POSA's understanding of the term) and that Wu does not disclose such a structure, a POSA would have found this to be obvious.

345. As I explained above, Wu states that "system 10 is ***highly versatile*** and can be used to supply air to ***various types of air mattresses*** such as a rotational therapy mattress, a pulsating mattress or constant pressure mattress." Wu (Ex. 1005), 4:44-47 (emphasis added); *see also* Wu '925 Application (Ex. 1066), 7:4-6. As of the Priority Date, a POSA would have been well-aware of inflatable mattresses that are substantially airtight.

346. Chaffee, for example, disclosed such a structure in bladder 20. Specifically, Chaffee disclosed an inflatable device 10 that included "a ***substantially fluid impermeable*** bladder 20 [orange]." Chaffee (Ex. 1006), 3:5

(emphasis added). Chaffee described bladder 20 as being an inflatable body by stating that it "may be constructed in any manner and of any material(s) ***capable of retaining a desired fluid*** under a degree of pressure necessary for its intended application[.]" *Id.* at 3:8-10 (emphasis added); *see also id.* at 3:32-42. Further, Chaffee also taught a pump to "***inflate*** and/or deflate bladder 20." *Id.* at 3:64; *see also id.* at 4:23-26.

347. In view of Wu's teaching that "system 10 is ***highly versatile*** and can be used to supply air to ***various types of air mattresses***," a POSA would have found it obvious to use system 10 with Chaffee's bladder 20. Wu (Ex. 1005), 4:44-47 (emphasis added); *see also* Wu '925 Application (Ex. 1066), 7:4-6. And, as I explained above, a POSA would have found obvious the remaining limitations of the Challenged Claims in view of Wu in combination with Goldsmith (Ground 2). *See* ¶¶ 298-301, above.

IX. CONCLUSION

348. In signing this declaration, I recognize that the declaration may be filed as evidence in a contested case before the Patent Trial and Appeal Board of the United States Patent and Trademark Office. I also recognize that I may be subject to cross-examination in the case and that cross-examination will take place within the United States. If cross-examination is required of me, I will cooperate

to the best of my ability to appear for cross-examination within the United States during the time allotted for cross-examination.

349. I reserve the right to supplement my opinions in the future to respond to any arguments that the Patent Owner raises and to take into account new information as it becomes available to me.

350. I declare that all statements made herein of my own knowledge are true and that all statements made on information and belief are believed to be true; and further that these statements were made with the knowledge that willful false statements and the like so made are punishable by fine or imprisonment, or both, under Section 1001 of Title 18 of the United States Code.

351. I declare under penalty of perjury that the foregoing is true and correct.

Executed on: 3/29/2018

Joseph J. Beaman, Jr.

Joseph J. Beaman, Jr.

APPENDIX A

Joseph J. Beaman, Jr.
May 2017
THE UNIVERSITY OF TEXAS AT AUSTIN
Cockrell School of Engineering
Resume

FULL NAME: Joseph J. Beaman, Jr. **TITLE:** Professor
ENDOWED POSITION: Earnest F. Gloyna Regents Chair in **DEPARTMENT:** Mechanical Engineering

EDUCATION:
Sc.D., Mechanical Engineering, Massachusetts Institute of Technology, Cambridge, Massachusetts, 1979
M.S., Mechanical Engineering, The University of Texas at Austin, Austin, TX, 1975
B.S., Mechanical Engineering, The University of Texas at Austin, Austin, TX, 1972

LAST 4 YEARS TESTIMONY:
Effingo Wireless v Motorola Mobility, US District Court, Western District of Texas, San Antonio Division, testified for defense. (2013)
Terumo v Lepu Medical Technology and Vascular Solutions, US District Court, District of New Jersey, Deposition only. (2013)
Retractable Technologies and Thomas Shaw v Becton Dickinson, US District Court, Eastern District of Texas, Tyler Division, testified for defense. (2013)
L.C. Eldridge Sales v Azen Manufacturing, US District Court, Eastern District of Texas, Tyler Division, testified for defense. (2013)
HNI Corp and Allsteel v Dirtt Environmental Solutions, Patent Trial and Appeal Board, IPR 2015-01690, Deposition only. (2016)
Intex Recreation v Bestway Inflatables & Material, Patent Trial and Appeal Board, IPR 2016-00180, Deposition only. (2016)
Whirlpool Corp v TST Water, LLC, US District Court, Eastern District of Texas, Marshall Division, testified for plaintiff, (2017)
Cutsforth v Lemm Liquidating, Fulmer, Westinghouse Air Brake, Motive Power, US District Court, District of Minnesota, Deposition only (2017)

PROFESSIONAL REGISTRATION:
TX, 50385

CURRENT AND PREVIOUS ACADEMIC POSITIONS:
2001 - present, The University of Texas at Austin, Earnest F. Gloyna Regents Chair in Engineering
2012 – present, Director Advanced Manufacturing & Design Center
2001 - 2012, The University of Texas at Austin, Chair, Department of Mechanical Engineering
2001 - 2002, The University of Texas at Austin, Ernest Cockrell, Jr., Memorial Chair in Engineering

1991 - 2001, The University of Texas at Austin, Andersen Consulting Endowed Professorship
1990 - 1991, The University of Texas at Austin, Temple Foundation Endowed Faculty Fellowship
1989 - present, The University of Texas at Austin, Professor
1985 - 1989, The University of Texas at Austin, Associate Professor
1979 - 1985, The University of Texas at Austin, Assistant Professor
1979 - 1979, MIT, Visiting Assistant Professor
1976 - 1978, MIT, Instructor
1972 - 1974, The University of Texas at Austin, Teaching Assistant

OTHER PROFESSIONAL EXPERIENCE:
7/1975 - 8/1975, IBM Austin, Senior Associate Engineer, Analysis & Design
5/1974 - 9/1975, IBM Austin, Associate Engineer, Analysis & Design
1990 - 1992, DTM Corporation, CTO, Product Development

HONORS AND AWARDS:
Tau Beta Pi (1970)
BS with High Honors, University of Texas at Austin (1972)
Phi Kappa Phi (1970)
MIT Fellowship, Cambridge, MA (1976)
Best Paper Award, Journal of Dynamic Systems Measurement and Control, University of Texas at Austin (1983)
DuPont Young Faculty Award, University of Texas at Austin (1983)
Engineering Foundation Award, University of Texas at Austin (1984)
NSF Presidential Young Investigator Award, University of Texas at Austin (1984)
Myron L. Begeman Faculty Fellow, University of Texas at Austin (1987)
Halliburton Foundation Award of Excellence, University of Texas at Austin (1989)
Engineering Foundation Endowed Faculty Fellowship in Engineering, Number 5, University of Texas at Austin (1990)
Andersen Consulting Endowed Professorship in Manufacturing Systems Engineering, University of Texas at Austin (1992)
Fellow, American Society of Mechanical Engineers (1996-present)
Listed in Who's Who in Science and Engineering (1996-2004)
Literati Club Outstanding Paper Award, Rapid Prototyping Journal, West Yorkshire, England (October 1996)
Listed in Who's Who in Finance and Industry (1997-2004)
Member, Advisory Board of the Rapid Prototyping Association, Society of Manufacturing Engineers (January 1998-December 1999)
Best Paper Award, American Vacuum Society, Santa Fe, NM (2001)
Listed in Who's Who Among America's Teachers (2001-2003)
Joe J. King Professional Engineering Achievement Award, College of Engineering (2002)
Women in Engineering Advocate Award, The University of Texas at Austin - Women in Engineering Program (2008)

Distinguished Mechanical Engineer, Department of Mechanical Engineering, The University of Texas at Austin (2011)
Elected Society of Manufacturing Board of Directors, SME (2012-2014)
Nominated and Appointed US Army Science Board, US Army (2012-2015)
Elected National Academy of Engineers (2013)
Freeform and Additive Manufacturing Excellence Award, SFF Conference, (2014)
Elected Fellow of the National Academy of Inventors, (2015)
SME Albert M. Sargent Progress Award for significant accomplishments in the field of manufacturing processes, methods, or systems, 2016.
Elected Fellow of Society of Manufacturing (SME) (2016)
NAE Mechanical Engineering Peer Committee (2018-2021)

OTHER PROFESSIONAL HIGHLIGHTS:
Invited participant on Japanese Technology Evaluation Center Panel Report on Rapid Prototyping in Japan and Europe (1996)
Founder of DTM Corporation, 1990, grew to $25 million in sales before being acquired by 3D Systems in 2001.
Listed in Naval Research Reviews, Profiles in Science, Office of Naval Research, Three/1998, Volume I, page 4 (January 1999)
Moderator for Session on Process Development and Research at the Rapid Prototyping and Manufacturing 1999 Conference and Exposition, Chicago, IL (April 21, 1999)
Selected for Final Site Visit for NSF Engineering Research Center Proposal submitted with Southern Methodist University and Rice University (February 2000)
Chair of World Technology Evaluation Center Panel on Additive/Subtractive Manufacturing, 2001.
NSF Council of Visitors for the Design and Manufacture Academic Programs of the Division of Design, Manufacture and Industrial Innovation of the Engineering Directorate of the National Science Foundation.
Served as invited External Reviewer for the Academic Assessment Process, Department of Mechanical Engineering, School of Engineering at the University of Connecticut. (Spring 2003)
Invited Chair of Expert Review Panel for the IMCRC at Loughborouh University. Purpose was an in-depth review of the IMCRC by the Innovative Manufacturing and Construction Research Centre. (2007)
Invited Member, Global Summit on the Future of Mechanical Engineering, Washington, DC (2008)
Chair Evaluation Committee, EPSRC Center in Additive Manufacturing, Nottingham, UK, (2014)
Guest Editor, Special Issue on Additive Manufacturing, Journal Manufacturing Science, ASME, 2014-2015

MEMBERSHIPS IN PROFESSIONAL AND HONORARY SOCIETIES:
ASME International, American Society of Mechanical Engineers
SME, Society of Manufacturing Engineers
SME/RPA, Rapid Prototyping Association

INTEX EX. 1045, Pg. 197
Intex Recreation v. Bestway Inflatables, IPR2023-00489

ASEE, American Society for Engineering Education
ASM International, The Materials Information Society
SCS, Society for Computer Simulation
AAAS, American Association for the Advancement of Science
MRS, Materials Research Society
TMS, The Minerals, Metals & Materials Society

PROFESSIONAL SOCIETY AND MAJOR GOVERNMENTAL COMMITTEES:
ASME International, Dynamic Systems and Control Division Executive Committee, (1979-present)
Rapid Prototyping Association of Society of Manufacturing Engineers, (1998-present)
Rapid Prototyping Association of Society of Manufacturing Engineers, Advisory Board, (1998-2001)
RPA/SME, Rapid Prototyping Association of Society of Manufacturing Engineers, Executive Committee, (2000-2001)
ASME International, Mechanical Engineering Department Heads Committee, (2001-2011)
ASEE, American Society for Engineering Education, Department Heads Committee, (2002-2011)
National Science Foundation, Committee of Visitors for the Design and Manufacture Academic Programs of the Division of Design, Manufacture and Industrial Innovation of the Engineering Directorate of NSF, (2003)
World Technology Evaluation Center, WTEC Panel on Additive/Subtractive Manufacturing, (2003-2011)
Specialty Metals Processing Consortium, SMPC Technical Committee, (2005-present)
St. Andrew's School, Austin TX, Board of Trustees, (2007-2014)
ASME International, Systems and Design Technical Group Leader, (2008-2011)
ASME International, TCOB Committee on Technology Policy, (2008-2011)
ASME International, Emerging Technology Committee, (2009-2012)
South Dakota School of Mines and Technology, Board of Regents External Review Committee, (October 2009)
ASME International, Leonardo da Vinci Award Committee, (2010-2012)
ASME International, Mechanical Engineering Department Heads Executive Committee, (2010-2012)
United States Army, Army Science Board, (January 2012-2015)
Technical Editor for ASME Journal of Dynamic Systems Measurement and Control (2013 – present)

CONFERENCES ORGANIZED/CHAIRED:
A. Symposia and Conference Organizer
Local Organizer and Conference Host, Liquid Metals Processing Conference, Austin (Fall 2013)
Co-organizer, Solid Freeform Fabrication Symposium, Austin, TX (1989-present)
NSF/ASME Workshop on Research Needs for Control in Mechanical Systems, Seattle (June 1986)
Program Chair, Dynamic Systems Control Division, ASME (1984)

INTEX EX. 1045, Pg. 198
Intex Recreation v. Bestway Inflatables, IPR2023-00489

B. Session Chairman

Session Chair, ASME Dynamic Systems and Control Conference, Ann Arbor, MI (October 2008)

Session Chair, NSF Workshop Redefining Mechanical Engineering with Adnan Akay, Carnegie Mellon University (January 25-27, 2002)

Session Chair, Issues in Structured Physical Modeling, ACC (1987)

UNIVERSITY COMMITTEES:

The University of Texas at Austin, Budget Council, (1989-present)
The University of Texas at Austin, Manufacturing Systems Program Executive Committee, (1989-2005)
The University of Texas at Austin, College of Engineering representative to the Faculty Council, (1998-2000)
The University of Texas at Austin, Research Policy Committee of Faculty Council, (1999-2000)
The University of Texas at Austin, Advisory Panel, Center for Electromechanics, (2007-2012)
The University of Texas at Austin, Review Committee for the Institute for Electrochemistry, (2010)
The University of Texas at Austin, Rio Grande Valley Manufacturing Initiative, (March 2010-present)

SCHOOL COMMITTEES:

Cockrell School of Engineering, Faculty Salary Review Committee, (1989-2011)
College of Engineering, Promotion & Tenure Review Committee, (1997-1999)
College of Engineering, Strategic Plan, (1999-2000)
Cockrell School of Engineering, Reactor Oversight Committee, (2005-present)
Cockrell School of Engineering, IT Committee, (2006-2011)
Cockrell School of Engineering, Strategic Planning, (2008-2011)
The University of Texas at Austin, SBES Computational Cardiovascular Engineering Subcommittee, (2009-2011)

DEPARTMENT COMMITTEES:

Mechanical Engineering, Qualifying Exams for Mechanical Systems and Design, (1996-1999)
Mechanical Engineering, Strategic Planning Committee, (1998-present)
Department of Mechanical Engineering, Faculty Recruiting, (2000-2001)
Department of Mechanical Engineering, Assisted organization of University-wide initiative with Ford Motor Company resulting in 6 initiatives for the ME Department and responsible for managing grant funds totaling $3,450,000, (Spring 2001)

PUBLICATIONS:

A. Refereed Archival Journals

INTEX EX. 1045, Pg. 199
Intex Recreation v. Bestway Inflatables, IPR2023-00489

1. Ojinnaka, M., J. Beaman"Full-Course Drilling Model for Well Monitoring and Stochastic Estimation of Kick", *J Petrol Science and Engineering*, accepted, 2018.
2. Michael R. Gardner, Adam Lewis, Jongwan Park, Austin B. McElroy, Arnold D. Estrada, Scott Fish, Joseph J. Beaman, Thomas E. Milner, "In-situ process monitoring in selective laser sintering using optical coherence tomography," *Opt. Eng.* **57**(4), 041407 (2018).
3. Zhang, L, T. Phillips, A. Mok, D. Moser, J. Beaman, "Automatic Laser Control System for Selective Laser Sintering", *Transactions on Industrial Informatics*, IEEE, submitted, 11, 2017.
4. Wroe, W., J. Gladstone, T. Phillips, S. Fish, J. Beaman, A. McElroy,),"In-situ thermal image correlation with mechanical properties of nylon-12 in SLS", Rapid Prototyping Journal, Vol. 22, No 5 pp 794 – 800, 2016.
5. Diller, T.T., M. Yaun, D.L. Bourell, J. Beaman, "Thermal model and measurements of polymer laser sintering", *Rapid Prototyping Journal*, 21#1, (2015), pp. 2-13.
6. J. Beaman, F. Lopez , "The emerging nexus of cyber, modeling, and estimation in advanced manufacturing: Vacuum arc remelting to 3D printing ," ASME Dynamic Systems and Control Magazine, December 2014.
7. Fish, S., J.C. Booth, S.T. Kubiak, W.W. Wroe, A.D. Bryant, D.R. Moser, J.J. Beaman, "Design and Subsystem Development, of a High Temperature Selective Laser Sintering Machine for Enhanced Process Monitoring and Control," *Additive Manufacturing,* Elsevier, December 2014.
8. Felipe Lopez, Lixun Zhang, Aloysius Mok, and Joseph Beaman. 2015. Particle filtering on GPU architectures for manufacturing applications. *Comput. Ind.* 71, C (August 2015), 116-127.
9. Devaraj, V., F. Lopez, J. Beaman and S. Prudhomme. "Model-based control of a continuous coating line for Proton Exchange Membrane Fuel Cell Electrode Assembly," International Journal of Chemical Engineering, Article ID 572983, January 2015, doi:10.1155/2015/572983.
10. Beaman, J., F. Lopez, R. Williamson. "Modeling of the Vacuum Arc Remelting Process for Estimation and Control of the Liquid Pool Profile", *ASME Journal of Dynamic Systems, Measurements and Control, May 2014, Vol. 136.*
11. Yaun, M., T.J. Diller, D. Bourell, J. Beaman, "Thermal Conductivity of Polyamide 12 Powder for Use in Laser Sintering", *Rapid Prototyping Journal,* V0l. 19, No. 6, 2013, pp. 437-445.
12. Williamson, R.L., Beaman, J.J., "Modern Control Theory Applied to Remelting of Superalloys," Materials Science Forum, Vol. 706-709, 2012, pp. 2484-2489, (2012)
13. Silverman, T.J. Meyers, J.P. and Beaman, J.J., "Dynamic Thermal, Transport and Mechanical Model of Fuel Cell Membrane Swelling," Fuel Cells, Vol. 11, 2011, No. 6, pp. 875-887
14. Ahn, S., Beaman, J.J., Williamson, R.L., Melgaard, D.L. , "Electroslag remelting process using unscented Kalman filter," Journal Of Dynamic

INTEX EX. 1045, Pg. 200
Intex Recreation v. Bestway Inflatables, IPR2023-00489

Systems, Measurement, And Control, Vol. 132, 2010, No. January 2010, pp. 011011-2 (9 pages)
15. Silverman, T.J., Meyers, J.P., Beaman, J.J., "Modeling Water Transport and Swelling in Polymer Electrolyte Membranes," Journal Of The Electrochemical Society, Vol. 157, 2010, No. 10, pp. B1376-B1381
16. Silverman, T.J., Meyers, J.P. and Beaman, J.J. , "Modeling Water Transport and Swelling in Polymer Electrolyte Membranes," Journal of The Electrochemical Society, Vol. 157, 2010, No. 10, pp. B1376-B1381
17. Stevinson, B., Bourell, D.L., Beaman, J.J., "Over-infiltration mechanisms in selective laser sintered Si/SiC preforms," Rapid Prototyping Journal, Vol. 14, 2008, No. 3, pp. 149-154
18. Stevinson, B., Bourell, D.L., Beaman, J.J., "Dimensional stability during post-processing of selective laser sintered ceramic preforms," Virtual And Physical Prototyping, Vol. 1, January 2007, No. 4, pp. 209-216
19. Evans, R.S., Bourell, D.L., Beaman, J.J., Campbell, M.I., "Rapid Manufacturing of Silicon Carbide Composites," Rapid Prototyping Journal, Vol. 11, 2005, No. 1, pp. 37-40
20. King, C.W., Campbell, M.I., Beaman, J.J., Sreenivasan, S.V., "Synthesis of Multistable Equilibrium Linkage Systems Using an Optimization Approach," Structural And Multidisciplinary Optimization, Vol. ISSN 1615-147X, 2005, pp.1615-1488
21. King, C.W., Campbell, M.I., Beaman, J.J., Sreenivasan, S.V., "Synthesis of Multistable Equilibrium Linkage System Using an Optimization Approach," Structural And Multidisciplinary Optimization, Vol. 158, 2004, pp. 1-26
22. King, C.W., Beaman, J.J., Sreenivasan, S.V., Campbell, M.I., "Multi-Stable Equilibrium System Design Methodology and Demonstration," Journal Of Mechanical Design, Vol. 126, 2004, No. 6, pp. 1036-1046
23. Williamson, R.L., Beaman, J.J., "A Demonstration of Melt Rate Control During VAR of "Cracked" Electrodes," Journal of Materials Science, Vol. 39, 2004, No. 24, pp. 7161-7168
24. Bourell, D.L., Beaman, J.J., Marcus, H.L., Barlow, J.W., Deckard, C.R. , "Chronology and Current Processes for Freeform Fabrication," Journal of The Japan Society Of Powder And Powder Metallurgy, Vol. 50, November 2003, No. 11, pp. 981-991
25. Wang, H.Y., Bourell, D.L., Beaman, J.J., "Laser Polishing of Silica Slotted Rods," Materials Science And Technology, Vol. 19, March 2003, pp. 382 - 387
26. Dutson, A.J., Wood, K.L., Beaman, J.J., Crawford, R.H., Bourell, D.L., "Application of Similitude Techniques to Functional testing of Rapid Prototypes," Rapid Prototyping Journal, Vol. 9, 2003, No. 1, pp. 6-13.
27. Ramos, J.A., Bourell, D.L., Beaman, J.J. , "Surface Over-Melt During Laser Polishing of Indirect-SLS Metal Parts," Mat. Res. Soc. Symp. Proc., Vol. 758, 2003, pp. 53 - 61
28. Dutson, A.J., Wood, K.L., Beaman, J.J., Crawford, R.H., Bourell, D.L., "Application of Similitude Techniques to Functional Testing of Rapid Prototypes," Rapid Prototyping Journal, Vol. 9, 2003, No. 1, pp. 6-13

INTEX EX. 1045, Pg. 201
Intex Recreation v. Bestway Inflatables, IPR2023-00489

29. Bourell, D.L., Wohlert, M., Harlan, N., Das, S., Beaman, J.J. , "Powder Densification Maps in Selective Laser Sintering," Journal Of Advanced Engineering Materials, 2002.
30. 21. Wang, H.Y., Bourell, D.L., Beaman, J.J. , "Laser Polishing of Silica Slotted Rods," Materials Science And Technology, 2002
31. 22. Harlan, N.R., Reyes, D., Bourell, D.L., Beaman, J.J., "Titanium Castings Using Laser-Scanned Data and Selective Laser-Sintered Zirconia Molds," Journal Of Materials Engineering and Performance, 2001
32. Bourell D.L., Beaman, J.J., Klosterman, D., Gibson, I., Bandyopadhyah, A., "Rapid Prototyping," ASM Materials Handbook On Composites, Vol. 21, 2001, pp. 383-387
33. Harlan, N.R., Reyes, R., Bourell, D.L., Beaman, J.J., "Titanium Castings Using Laser-Scanned Data and Selective Laser-Sintered Zirconia Molds," Journal of Materials Engineering And Performance, Vol. 10 (4), 2001, pp. 410-413.
34. Das, S., Fuesting, T.P., Danyo, G., Brown, L.E., Beaman, J.J., Bourell, D.L., "Direct Laser Fabrication of Superalloy Cermet Abrasive Turbine Blade Tips," Journal of Materials And Design, Vol. 21, 2000, No. 2, pp. 63-73
35. Das, S., Fuesting, T., Danyo, G., Bourell, D.L., Beaman, J.J., "Direct Laser Fabrication of a Gas Turbine Engine Component," Materials And Design, August 1999.
36. Das, S., Wohlert, M., Bourell, D.L. and Beaman, J.J., "Processing of Titanium Net Shapes by SLS/HIP," Materials And Design, Vol. 20, June 1999, pp. 115-121.
37. Das, S., Wohlert, M., Beaman, J.J., Bourell, D.L., "Producing Metal Parts by Selective Laser Sintering/Hot Isostatic Pressing," Journal of Metals, Vol. 50, December 1998, No. 12.
38. Das, S., Wohlert, M., Bourell, D.L. and Beaman, J.J., "Microstructure and Mechanical Properties of Metal Parts Produced by SLS/HIP," Journal of Metals, November 1998.
39. Melgaard, D., Williamson, R.L., Beaman, J.J., "Controlling Remelting Processes for Superalloys and Aerospace Ti Alloys," Journal of Metals, March 1998, pp. 13-17.
40. Das, S., Wohlert, M., Bourell, D.L., Beaman, J.J., "Direct Laser Freeform Fabrication of High Performance Metal Components," Rapid Prototyping Journal, Vol. 4, 1998, No. 3.
41. Das, S., Fuesting, T., Brown, L.E., Harlan, N., Lee, G., Beaman, J.J., Bourell, D.L., Barlow, J.W., Sargent, K., "Direct SLS Processing for Production of Cermet Composite Turbine Sealing Components," Journal of Materials And Manufacturing Processes, Vol. 13, 1998, No. 3.
42. Barlow, J.W., Beaman, J.J., Badrinarayan, A., "A Rapid-Mould making System: Material Properties and Design Considerations ," Rapid Prototyping Journal, Vol. 2 , 1996.
43. Beaman, J.J., "A Rapid Mould-Making System: Material Properties and design Considerations," Rapid Prototyping Journal, Vol. 2, 1996, No. 3.

INTEX EX. 1045, Pg. 202
Intex Recreation v. Bestway Inflatables, IPR2023-00489

44. Agarawala, M., Bourell, D.L., Beaman, J.J., Marcus, H.L., and Barlow, J.W., "Direct Selective Laser Sintering of Metals," Rapid Prototyping Journal, Vol. 1, 1995, No. 1.
45. Nelson, J.C., Vail, N.K., Barlow, J.W., Beaman, J.J., Bourell, D.L., Marcus, H.L., "Selective Laser Sintering of Polymer-Coated Silicon Carbide Powders," Industrial And Engineering Chemistry Research, Vol. 34, 1995, pp. 1641-1651.
46. Schreuders, P.D., Diller, K.R., Beaman, J.J., Paynter, H.M., "An Analysis of Coupled Multicomponent Diffusion in Interstitial Tissue," Journal Of Biomechanical Engineering, Vol. 116, May 1994, pp. 164-171.
47. Schreuders, P., Diller, K.R., Beaman, J.J., Paynter H.M., Clark, D., "Kinetic Analysis of Coupled Interstitial Multicomponent Diffusion," Network Thermodynamics, Heat And Mass Transfer In Biotechnology, Vol. 116, 1994, pp.164-171
48. Longoria, R.G., Miksad, R.W., Beaman, J.J., "Frequency Domain Analysis of In-Line Forces on Circular Cylinders in Random Oscillatory Flow," Journal of Offshore Mechanics And Arctic Engineering, Vol. 115, February 1993, pp. 23-30
49. Nelson, C., Xue, S., Barlow, J.W., Beaman, J.J., Marcus, H.L., Bourell, D.L. , "Model of the Selective Laser Sintering of Bisphenol-A Polycarbonate," Industrial Engineering Chemical Research, Vol. 32, 1993, pp. 2305-2317
50. Marcus, H.L., Zong, G., Wu, Y., Bourell, D.L., Beaman, J.J., "Direct Solid Freeform Fabrication of High Temperature Materials Using Selective Laser Sintering," The Minerals, Metals And Materials Society, March 14, 1992.
51. Beaman, J.J., Bourell, D.L., Marcus, H.L., Barlow, J.W. , "Selective Laser Sintering of Metals and Ceramics," The International Journal of Powder Metallurgy, Vol. 28, 1992, No. 4
52. Paynter, H.M., Beaman, J.J., "On the Fall and Rise of the Circuit Concept: Contrasting Views of Network Thermo and Chemical Networking," Journal of Franklin Institute, 1991.
53. da Silva, R., Wood, K.L., Beaman, J.J., "A Theory for Geometric Query Processing in Engineering Design and Manufacture," Journal Of Computer Aided Design, 1991.
54. da Silva, R., Wood, K.L., Beaman, J.J., "Engineering Design Calculations with Fuzzy Parameters," International Journal Of Fuzzy Sets And Systems, 1991.
55. Beaman, J.J., Lin, C.H., "Application of Nonlinear Quadratic Stochastic Control to a Position Servomechanism," Journal of Dynamic Systems, Measurement And Control, December, 1990.
56. da Silva, R., Wood, K.L., Beaman, J.J., "Interacting and Interfeature Relations in Engineering Design for Manufacture," Journal Of Systems Automation, Research And Applications- Special Issue, November 12, 1990.
57. Marcus, H.L., Beaman, J.J., Barlow, J.W., Bourell, D.L., "Solid Freeform Fabrication: Powder Processing," Ceramic Bulletin, Vol. 69, April 1990, No. 6.

58. Marcus, H.L., Beaman, J.J., Barlow, J.W.,Bourell, D.L., "Solid Freeform Fabrication: Design and Powder Processing," Journal Of The Minerals, Metals And Materials Society, April 1990, pp. 8-10.
59. Beaman, J.J., Lin, C.H., "Application of Nonlinear Quadratic Stochastic Control to a Position Servomechanism," Journal Of Dynamic Systems, Measurement And Control, September 1989.
60. Beaman, J.J, Breedveld, P., "Physical Modeling with Eulerian Frames and Bond Graphs," Journal Dynamic Systems, Measurement And Control, June 1988.
61. Beaman, J.J., Rosenberg, R.C. , "Constitutive and Modulation Structure in Bond Graph Modeling," Journal Of Dynamic
62. Systems, Measurement And Control, June 1988
63. Ingrim, M.E., Masada, G.Y., Beaman, J.J., "Bond Graph Reticulation of Galerkin Approximations in Thermoelasticity," Automated Modeling In Physical Systems, 1988.
64. Beaman, J.J., Wang, S.Y., Masada, G.Y. , "Cycle Time Control of a Pressure Swing Oxygen Generation System," Aviation Space And Environmental Medicine, Vol. 58, December 1987, pp. 1225-1229.
65. Diller, K.R., Beaman, J.J., McCaa, C., Montoya, J.P., Takahashi, T., "Analysis of the Osmotic Response of Human Monocytes to Freezing with a Cryoprotective Additive," Modeling And Simulation, Vol. 18, 1987.
66. Montoya, J.P., Diller, K.R., Beaman, J.J., Breedveld, P.C., "A Network Thermodynamic Model for Coupled Membrane Transport: Application to Cell Cryopreservation," Journal Of Heat Transfer, 1987
67. Khonsari, M., Beaman, J.J., "Thermohydrodynamics Analysis of Journal Bearings: A Study of Boundary Conditions," ASLE Journal, April 1986
68. Beaman, J.J., "A Dynamic Model of a Pressure Swing Oxygen Generation System," Journal Of Dynamic Systems, Measurement and Control, June 1985
69. Beaman, J.J., "Nonlinear Quadratic Gaussian Control," Int. Jour. Control, February 1984
70. Beaman, J.J., Healey, A.J., Werlin, J. , "A Dynamic Model of a Molecular Sieve Bed with Nonlinear and Coupled Isotherms," Journal Of Dynamic Systems, Measurement And Control, December 1983
71. Pottebaum, K.L., Beaman, J.J., "A Dynamic Model of a Concentric LADD Actuator," Journal Of Dynamic Systems Measurement And Control, September 1983, pp. 157-164
72. Beaman, J.J., Hedrick, J.K., "Improved Statistical Linearization for Analysis and Control of Nonlinear Stochastic Systems: Part I: An Extended Statistical Linearization Technique," Journal Of Dynamic Systems, Measurement And Control, March 1981, pp. 14-21

B. Refereed Conference Proceedings

1. Beaman, J.J., "Application of Statistical Linearization and LQG Design to Position Control," Proceedings Of The 1983 American Control Conference (ACC), San Francisco, CA, pp 127-131, June 1983

INTEX EX. 1045, Pg. 204
Intex Recreation v. Bestway Inflatables, IPR2023-00489

2. Beaman, J.J., "Application of NQG Control with Uncertain and Incomplete Measurements," Proceedings Of The 1984 American Control Conference (ACC), San Diego, CA, June 1984
3. Beaman, J.J., Montoya, J.P., Diller, K.R., Breedveld, P.C., "A Network Thermodynamic Model for Coupled Membrane Transport: Application to Cell Cryopreservation," Proceedings Of The 1987 ASME-JSME Thermal Engineering Joint Conference, edited by P. J. Marto and I. Tanasawa, published by ASME, New York, Vol. 3, pp 537-542, 1987
4. Beaman, J.J., Deckard, C.R. , "Solid Freeform Fabrication and Selective Powder Sintering," 15th North American Manufacturing Research Proceedings, May 1987
5. Beaman, J.J., Rosenberg, R.C., "Additional Structure in Bond Graph Modeling," Proceedings Of The 1987 American Control Conference (ACC), Minneapolis, June 1987
6. Beaman, J.J., Rosenberg, R.C., "Clarifying Energy Storage Field Structure in Dynamic Systems," Proceedings Of The 1987 American Control Conference (ACC), Minneapolis, June 1987
7. Beaman, J.J., Sun, M.M., Barlow, J., Nelson, C., "The Role of Solid Freeform Fabrication in Investment Casting," Proceedings At The 1989 Vacuum Metallurgy Conference On The Melting And Processing Of Specialty Materials, Pittsburgh, PA, May 1989
8. Beaman, J.J., Munkvold, G., "Removal of Toxic Catalytic Oxidation Products Via Adsorption," 1989 US Army Chemical Research, Development And Engineering Center Conference, Aberdeen Proving Ground, MD, November 1989
9. Beaman, J.J., Munkvold, G., "Onboard Oxygen Generation Systems Modeling: Three Component Feeds," SAFE Association Symposium, New Orleans, LA, December 1989
10. Beaman, J.J., Longoria, R.G., Miksad, R.K., "Nonlinear Hydrodynamic Forces in Random Oscillatory Flow," The First European Offshore Mechanics Symposium, Trondheim, Norway, August 21, 1990
11. Beaman, J.J., Wood, K., da Silva, R., "Representing and Manipulating Interacting and InterFeature Relationships in Engineering Design for Manufacture," 1990 ASME Design Automation Conference, Chicago, IL, September 16-19, 1990
12. Matthews, R.D., Dongre, S., Beaman, J.J., "Intake and ECM Submodel Improvements for Dynamic SI Engine Models: Examination of Tip-In/Tip-Out," Proceedings Of Society Of Automotive Engineers, January 1991
13. da Silva, R., Wood, K.L., Beaman, J.J., "An Algebraic Approach to Geometric Query Processing in CAD/CAM Applications," Proceedings Of The ACM 1991, Association Of Computing Machinery 1991 Symposium On Solid Modeling Foundations And CAD/CAM Applications, pp 73-86, 1991
14. Wood, K.L, Otto, K.N., Antonsson, E.K., Beaman, J.J., "Engineering Design Calculations Under Uncertainty," International Fuzzy Engineering Symposium, Yokohama, Japan, 1991
15. Munkvold, G.D, Teague, K.G., Edgar, T.F., Beaman, J.J., "Prediction of Bed Pressure Profiles in OBOGS," Proceedings Of The 1992 SAFE Conference, 1993
16. Marcus, H.L., Bourell, D.L., Beaman, J.J., Manthiram, A., Barlow, J.W., Crawford, R.H., "Challenges in Laser Processed Solid Freeform Fabrication," The

INTEX EX. 1045, Pg. 205
Intex Recreation v. Bestway Inflatables, IPR2023-00489

Minerals, Metals And Materials Society Symposium Proceedings, Processing And Fabrication Of Advanced Materials III, Pittsburgh, PA, October 17, 1993

17. Agarawala, M.K., Bourell, D.L., Beaman, J.J., Wu, B., Marcus, H.L., Crawford, R.H., Barlow, J.W., "Selective Laser Sintering of a Bronze Nickel Powder Mixture," Intelligent Manufacturing Systems International Conference On Rapid Product Development, Stuttgart, Germany, January 31, 1994
18. Agarawala, M.K., Bourell, D.L., Beaman, J.J., Wu, B., Marcus, H.L., "Structurally Sound Metal Parts by Selective Laser Sintering," The Mineral, Metals And Materials Society, Extraction & Processing Division Congress 1994 Proceedings, Materials Processing III, Warren, PA, March 2, 1994
19. Guduri, S., Crawford, R.H., Beaman, J.J., "Boundary Evaluation for Solid Freeform Fabrication," Proceedings Of The International Federation For Information Processing TC5 WG5.2/WG5.3 Conference, Litchfield Park, AZ, edited by M. J. Wozny and G. Olling, May 1994
20. Harlan, N., Das, S., Bourell, D.L., Beaman, J.J., "Selective Laser Sintering of High Performance High Temperature Metals," Seventh Solid Freeform Fabrication Symposium, published by The University of Texas Mechanical Engineering Department, August 12, 1996
21. Fuesting, T., Brown, L., Das, S., Harlan, N., Lee, G., Beaman, J.J., Bourell, D., Sargent, K. , "Development of Direct SLS Processing for Production of Cermet Composite Turbine Sealing Components - Part II," Seventh Solid Freeform Fabrication Symposium, published by The University of Texas Mechanical Engineering Department, August 13, 1996
22. Fuesting, T., Brown, L., Das, S., Harlan, N., Lee, G., Beaman, J.J., Bourell, D., Sargent, K. , "Development of Direct SLS Processing for Production of Cermet Composite Turbine Sealing Components - Part I," Seventh Solid Freeform Fabrication Symposium, published by The University of Texas Mechanical Engineering Department, August 13, 1996
23. Das, S., Beaman, J.J., Wohlert, M., Bourell, D.L., "Direct Selective Laser Sintering of High Performance Metals for Containerless HIP," Advances In Powder Metallurgy And Particulate Materials, Proceedings Of The International Conference On Powder Metallurgy And Particulate Materials, MPIF, Vol. 3 Part 21, pp 67-78, 1997
24. Bourell, D.L., Beaman, J.J., Barlow, J.W., Crawford, R.H., Marcus, H.L., Weiss, L.E., "Current and Future Trends in Solid Freeform Fabrication," Rapid Product Development Technologies, SPIE Proceedings, Vol. 2910, pp 104-113,
    1. 1997
25. Das, S., Beaman, J.J., Wohlert, M., Bourell, D.L., "Direct Selective Laser Sintering of High Performance Metals for Containerless HIP," Symposium On Powder Metallurgy-Current Research And Industrial Practices, Indianapolis, IN, September 15-18, 1997
26. Das, S., Beaman, J.J., Wohlert, M., Bourell, D.L., "Microstructure and Mechanical Properties of Metal Parts Produced by SLS/HIP," Symposium On Microstructure And Mechanical Properties Of Direct Fabricated Materials, The Metals, Minerals And Materials Annual Meeting, San Antonio, TX, February 1998

INTEX EX. 1045, Pg. 206
Intex Recreation v. Bestway Inflatables, IPR2023-00489

27. Das, S., Fuesting, T.P., Danyo, G., Brown, L.E., Beaman, J.J., Bourell, D.L., "Microstructure and Properties of Cermet Composite Abrasive Blade Tips Produced by Direct Laser Processing," Symposium On Microstructure And Mechanical Properties Of Direct Fabricated Materials, The Metals, Minerals And Materials Annual Meeting, San Antonio, TX, February 1998
28. Das, S., Beaman, J.J., Wohlert, M., Bourell, D.L., "Direct Laser Freeform Fabrication of High Performance Metal Components," Proceedings Of The Seventh European Conference On Rapid Prototyping And Manufacturing, Aachen, Germany, July 7-9, 1998
29. Das, S., Beaman, J.J., Wohlert, M., Bourell, D.L., "SLS/HIP - A Direct Freeform Fabrication Process for High Performance Metal Components," Advanced Materials And Processing (PRICM3), Proceedings Of The Third Pacific Rim International Conference On Advanced Materials And Processing, Honolulu, HI, July 12-18, 1998
30. Das, S., Beaman, J.J., Wohlert, M., Bourell, D.L., "Processing of Titanium Net Shapes by SLS/HIP," 1998 Solid Freeform Fabrication Symposium Proceedings, Austin, TX, August 10-12, 1998
31. Das, S., Fuesting, T.P., Danyo, G., Beaman, J.J., Bourell, D.L., Brown, L.E., Sargent, K., "Direct Laser Fabrication of a Gas Turbine Engine Component-Microstructure and Properties," 1998 Solid Freeform Fabrication Symposium Proceedings, Austin, TX, August 10-12, 1998
32. Beaman, J.J., "Advances in Selective Laser Sintering," Rapid Prototyping And Manufacturing Conference, Dallas, TX, September 18, 1998
33. Hysinger, C.L., Beaman, J.J., Williamson, R.L., Melgaard, D.K. , "Multiple Input Electrode Gap control during Vacuum Arc Remelting," Proceedings Of The 1999 International Symposium On Liquid Metal Processing And Casting, International Symposium On Liquid Metal Processing And Casting, Santa Fe, NM , edited by Alec Mitchell, Lisa Ridgeway, Michael Baldwin, published by American Vacuum Society, Vol. 1999, pp 145-155, 1999
34. Beaman, J.J., Jepson, L., Perez, J., Bourell, D., and Wood, K., "Initial Development of a Multi-Material Selective Laser Sintering Process (M2 SLS)," Proceedings Of The 8th European Conference On Rapid Prototyping And Manufacturing, Nottingham, UK, July 6-8, 1999
35. Bourell, D.L., Wohlert, M., Harlan, N., "Powder Densification Maps and Applications in Selective Laser Sintering," Deformation Processing And Properties Of Structural Materials-A Symposium Honoring Oleg D. Sherby, edited by E.M. Taleff, C.K. Syn, and D.R. Leseur, pp 219-230, 2000
36. Wohlert, M., Bourell, D.L., Das, S., Beaman, J.J., "Applications of Powder Densification Maps to Direct Metal SLS/HIP Processing," Eleventh Solid Freeform Fabrication Symposium, The University Of Texas At Austin, TX, pp 2. 50-158, August 2000
37. Beaman, J.J., Williamson, R.L., "A Nonlinear Reduced Order Model for Dynamic VAR Melt Rate Control ," Proceedings Of The 2001 International Symposium On Liquid Metal Processing And Casting, LMPC 2001 , Santa Fe, NM , edited by Alec Mitchell, James Van Den Avyle, published by American Vacuum Society, Vol. 2001, pp 161-174, September 2001

INTEX EX. 1045, Pg. 207
Intex Recreation v. Bestway Inflatables, IPR2023-00489

38. Williamson, R.L., Beaman, J.J., Melgaard, D.K., Shelmidine, G.J., Tubesing, P.K., Aikin, R.M. , "Dynamic Melt Rate Control on a Laboratory Scale VAR Furnace Without Load Cell Feedback ," Proceedings Of The 2001 International Symposium On Liquid Metal Processing And Casting , LMPC 2001 , Santa Fe, NM , edited by Alec Mitchell, James Van Den Avyle, published by American Vacuum Society, Vol. 2001, pp 175-186, September 2001
39. Williamson, R.L., Evans, D., Beaman, J.J. , "Model-Based Control of Melt Transients in VAR," Proceedings Of The 2001 International Symposium On Liquid Metal Processing And Casting Proceedings, , LMPC 2001 , Santa Fe, NM, published by American Vacuum Society , Vol. 2001, September 2001 , ( )
40. Bourell, D.L., Beaman, J.J. , "Freeform Fabrication - History and Current Processes," Rapid Prototyping Of Materials, TMS Fall Meeting, Columbus, Ohio, edited by F. Marquis and David L. Bourell, published by TMS, pp 3-18, 2002
41. Lappo K., Murphy, J., Ramos, J.A., Wood, K.L., Bourell, D.L., Beaman, J.J. , "Surface Roughness Determination of As Received and Laser Polished Indirect SLS Parts by Means of Line Profilometry," Rapid Prototyping Of Materials, TMS Fall Meeting, Columbus, Ohio, edited by F. Marquis and David L. Bourell, published by TMS, pp 185-190, 2002
42. Ramos, J.A., Bourell, D.L., Beaman, J.J., "Surface Over-Melt During Laser Polishing of Indirect-SLS Metal Parts,"Proceedings Of The 2002 MRS Spring Meeting, Symposium LL, edited by A. Pique, A.S. Holmes, and D. Dimos, pp 53-61, 2003
43. Williamson, R.L., Beaman, J.J., Melgaard, D.K., Shelmidine, G.J., Patel, A.D., Adasczik, C.B. , "A Demonstration of Melt Rate Control during VAR of "Cracked" Electrodes," Proceedings Of The 2003 International Symposium On Liquid Metal Processing And Casting, LMPC 2003, Nancy, France, edited by Peter D. Lee, Alec Mitchell, Jean-Pierre Bellot, Alain Jardy, published by SF2M (Societe Francaise de Metallurgie et des Materiaux), Vol. 2003, pp 39-48, September
    3. 2003
44. Beaman, J.J., Williamson, R.L., Melgaard, D.K., Shelmidine, G.J. , "Model-Based Gap and Melt Rate Control for VAR of Ti-6A1-4V," Proceedings Of The 2003 International Symposium On Liquid Metal Processing And Casting, LMPC 2003, Nancy, France, edited by Peter D. Lee, Alec Mitchell, Jean-Pierre Bellot, Alain Jardy , published by SF2M
    4. Societe Francaise de Metallurgie et des Materiaux), Vol. 2003, pp 67-76, September 2003
45. Bourell, D.L., Beaman, J.J. , "Methodologies and Processes in Additive/Subtractive Manufacturing," WTEC Panel Report On Additive/Subtractive Manufacturing Research And Development In Europe, published by WTEC, Inc., pp 7- 24, 2004
46. King, C.W, Campbell, M.I., Beaman, J.J., "On the Design Synthesis of Multistable Equilibrium Systems," Proceedings Of The ASME Design Engineering Technical Conference And Computers And Information In Engineering Conference, Salt Lake City, UT, published by ASME, Vol. 1, pp 109-122, 2004

INTEX EX. 1045, Pg. 208
Intex Recreation v. Bestway Inflatables, IPR2023-00489

47. Rosen, D.W., Atwood, C., Beaman, J.J., Bourell, D.L., Bergman, T., Hollister, S. , "Results of WTEC Additive/Substractive Manufacturing Study of European Research," Proceedings Of The 2004 SME Rapid Prototyping & Manufacturing Conference, Dearborn, Michigan, May 2004
48. Evans, R.S., Bourell, D.L., Beaman, J.J., Campbell, M.I., "Indirect Rapid Manufacturing of Silicon Carbide Composites," Fifteenth Solid Freeform Fabrication Symposium, edited by Bourell, et al., published by The University of Texas Mechanical Engineering Department, August 2004
49. Evans, R.S., Bourell, D.L., Beaman, J.J., Campbell, M.I. , "SLS Materials Development Method for Rapid Manufacturing," 16th SFF Symposium Proceedings 2005, 16th Solid Freeform Fabrication Symposium, Austin, TX, published by University of Texas at Austin, pp 184-196, August 1-3, 2005
50. Patel, A., Morrison, R., Williamson, R.L., Evans, D., Beaman, J.J. , "Model-Based Control of Melt Transients in VAR," Proceedings Of The 2005 International Symposium On Liquid Metal Processing And Casting, LMPC 2005, Santa Fe, NM, published by American Vacuum Society, Vol. 2005, September 2005
51. Williamson, R.L., Beaman, J.J., Melgaard, D.K., Shelmidine, G.J., Tubesing, P.K., Aikin, R.M. , "Dynamic Melt Rate Control on a Laboratory Scale VAR Furnace Without Load Cell Feedback," Proceedings Of The 2005 International Symposium On Liquid Metal Processing And Casting, LMPC 2005, Santa Fe, NM, published by American Vacuum Society , Vol. 2005, September 2005
52. Beaman, J.J., "Direct Digital Manufacturing," Small Lot Intelligent Manufacturing Workshop, SLIM II, Santa Fe, NM, published by Los Alamos National Laboratory, September 13-14, 2005
53. Beaman, J.J., Williamson, R.L., Melgaard, D.K., Hamel, J., "A Nonlinear Reduced Order Model for Estimation and Control of Vacuum Arc Remelting of Metal Alloys," Proceedings Of The 2005 ASME International Mechanical Engineering Congress And Exposition, IMECE 2005, Orlando, FL, November 5-11, 2005, (electronic form only – 9 pages)
54. Beaman, J.J., Williamson, R.L., Melgaard, D.K., Aikin, R.M., Ermann, R.G. , "Vacuum arc remelting pool power control," Proceedings Of The 2007 International Symposium On Liquid Metal Processing And Casting, LMPC 2007, Nancy, France, edited by Peter D. Lee, Alec Mitchell, Jean-Pierre Bellot, Alain Jardy, published by American Vacuum Society, Vol. 2007, pp 37-42, September 2007
55. Williamson, R.L., Erdmann, R.G., Beaman, J.J., Melgaard, D.K. , "Monitoring the vacuum arc remelting process," Proceedings Of The 2007 International Symposium On Liquid Metal Processing And Casting, LMPC 2007, Nancy, France, edited by Peter D. Lee, Alec Mitchell, Jean-Pierre Bellot, Alain Jardy, published by American Vacuum Society, Vol. 2007, pp 1-6, September 2007
56. Bourell, D.L., Beaman, J.J, "Support-free Infiltration of Selective Laser Sintered (SLS) Non-Metallic Preforms," Proceedings Of 2008 NSF Engineering Research And Innovation Conference, ERIC2008, Knoxville, TN, January 2008
57. Bourell, D.L., Vallabhajosyula, P., Stevinson, B., Chen, S., Beaman, J.J., "Rapid Manufacturing using Infiltration Selective Laser Sintering," Proceedings Of The

INTEX EX. 1045, Pg. 209
Intex Recreation v. Bestway Inflatables, IPR2023-00489

9th Biennial Conference On Engineering Systems Design And Analysis, ESDA08, Haifa, Israel, July 2008
58. Beaman, J.J., Ahn, S. , "Estimation of Electroslag Remelting Process with an Unscented Kalman Filter," International Symposium On Liquid Metal Processing And Casting Conference Proceedings, LMPC 2009, Santa Fe, NM, edited by Williamson, R.L., Lee, P.D., September 2009
59. Ahn, S., Beaman, J.J., Williamson, R.L., Melgaard, D.L., "Model-based Control of Electroslag Remelting Process using Unscented Kalman Filter," Proceedings Of The ASME Dynamic Systems And Control Conference, Proceedings Of The DSCC 2008, ASME Dynamic Systems And Control Conference (DSCC 2008), Ann Arbor, MI, published by ASME, 2010 ed, Vol. 132, No. 1 , 2010
60. Diller, T., Sreenivasan, R., Bourell, D., Beaman, J.J., "Thermal Characterization of Powder-Based Selective Laser Sintering of Nylon-12," Proceedings Of The 2011 TMS Annual Meeting, 2011 TMS Annual Meeting, San Diego, CA, Fall 2010
61. David K. Leigh, David L. Bourell, Joseph J. Beaman, "Effect of In-Plane Voiding on the Fracture Behavior of Laser Sintered Polyamide," Proceedings Of The Solid Freeform Fabrication Symposium, Solid Freeform Fabrication Symposium, Austin, pp 453-463, 2011
62. Beaman, J.J., Williamson, R.L., Lopez, L.F., "A reduced-order thermal model for dynamic VAR pool depth control," Proceedings Of The LMPC 2011 Conference, LMPC 2011 Conference, Nancy, France, 2011 ed, September 2011
63. Lopez, L.F., Beaman, J.J., Williamson, R.L., "A reduced-order model for dynamic vacuum arc remelting pool depth estimation and control," Proceedings Of The 2011 ASME Dynamic Systems And Control Conference , ASME Dynamic Systems And Control Conference (DSCC) 2011, Arlington, VA, 2011 ed, October 2011
64. David K. Leigh, David L. Bourell, Joseph J. Beaman, Jr, "Effect of In-Plane Voiding on the Fracture Behavior of Laser Sintered Polyamide," ProProceedings Of The ASME/ISCIE 2012 International Symposium On Flexible Automation, ASME/ISCIE 2012 International Symposium On Flexible Automation, St. Louis, pp 1-7, 2012
65. David L. Bourell and Joseph J. Beaman, "Powder Material Principles Applied to Additive Manufacturing," Proceedings Of The 141st TMS Annual Meeting, 141st TMS Annual Meeting, pp 537-544, 2012.
66. Lopez, L.F., J. Beaman, R.L. Williamson, “Linear-Quadratic-Gaussian (LQG) Controller for Liquid Pool Profile in Vacuum Arc Remelting”, Proceedings of the 2012 ASME Dynamic Systems and Control Conference, 2012.
67. Lopez, F.L., J. Beaman, R.L. Williamson, E. Taleff, T. Watt “Controlling Liquid Pool Depth in VAR of a 21.6 cm Diameter Ingot of Alloy 718”, *Proceedings of the 2013 International Symposium on Liquid Metal Processing and Casting,* Sept., 2013.
68. Watt, T., E. Taleff, J. Beaman, F. Lopez, R. Williamson, “Solidification Mapping of a Nickel Alloy 718 Laboratory VAR Ingot”, *Proceedings of the 2013 International Symposium on Liquid Metal Processing and Casting*, Sept., 2013.

INTEX EX. 1045, Pg. 210
Intex Recreation v. Bestway Inflatables, IPR2023-00489

73. Lopez F., L. Zhang, J. Beaman, A. Mok. "Implementation of a particle filter on a GPU for nonlinear estimation in a manufacturing remelting process," 2014 IEEE/ASME Conference on Advanced Intelligent Mechatronics.
74. Fish, S., S. Kubiak, W. Wroe, J. Booth, A. Bryant, J. Beaman, "A High Temperature Polymer Selective Laser Sintering Testbed for Controls Research", Proceedings Of The Solid Freeform Fabrication Symposium, Solid Freeform Fabrication Symposium, Austin, pp 171-179, Aug. 2015.
75. F. Lopez, J. Beaman, R. Williamson, D. Evans, "Controlling pool depth during VAR of Alloy 718," Proceedings of the 2015 International Symposium on Liquid Metal Processing and Casting Sept., 2015.
76. F. Lopez, J. Beaman, R. Williamson, "Auxiliary particle filter-model predictive control of the vacuum arc remelting process," Proceedings of the 2015 International Symposium on Liquid Metal Processing and Casting, Sept., 2015.
77. Wroe, W., J. Gladstone, T. Phillips, A. McElroy, S. Fish, J. Beaman, "In-Situ Thermal Image Correlation with Mechanical Properties of Nylon-12 in SLS", Proceedings Of The Solid Freeform Fabrication Symposium, Solid Freeform Fabrication Symposium, pp. 832-846, Aug., 2015
78. Phillips, T., A. McElroy, S. Fish, J. Beaman, "In-Situ Laser Control Method for Polymer Selective Laser Sintering (SLS)", Solid Freeform Fabrication Symposium, Aug., 2016.
79. A. Lewis, M. Gardner, A. McElroy, T. Milner, S. Fish, J. Beaman, In-Situ Process Monitoring and Ex-Situ Part Quality Assessment of Selective Laser Sintering Using Optical Coherence Tomography", Solid Freeform Fabrication Symposium, Aug., 2016.
80. Ojinnaka, O. J. Beaman, "Early Kick Detection Using Real-Time Data Analysis With A Lumped Parameter Model", Proceeding of the Dynamic Systems and Control Conference, ASME, Oct, 2016.
81. Zhang, L., A. Mok, J. Beaman, "PFGPU: A Particle Filter Compiler for GPGPU", 8th ACM/IEEE International Conference on Cyber-Physical Systems, Oct., 2017.
82. Zhao, N., J. Beaman, S. Fish, "Study on the Selective Laser Reaction Sintering of Silicon Carbide from a Mixture of Silicon and Carbon in Slurry Form," May, 2017, SAMPE Conference Proceedings, pp. SE17-0640
83. Taylor, S., S. Fish, J. Beaman, Thermal History Correlation with Mechanical Properties for Polymer Selective Laser Sintering, Solid Freeform Fabrication Symposium, Aug., 2017.
84. Lewis, A., N. Katta, A. McElroy, T. Milner, S. Fish, J. Beaman, Investigation of Optical Coherence Tomography Imaging in Nylon 12 Powder, Solid Freeform Fabrication, Aug., 2017.
85. Lewis, A., A. McElroy, T. Milner, S. Fish, J. Beaman, Initial Investigation of Selective Laser Sintering Laser Power vs. Part Porosity Using In-Situ Optical Coherence Tomography, Solid Freeform Fabrication Symposium, Aug., 2017.
86. Phillips, T., L. Zhang, S. Fish, J. Beaman, Laser Power Control in SLS, Solid Freeform Fabrication Symposium, Aug., 2017.
87. Ji, Y., S. Taylor, S. Fish, J. Beaman, Thermal Simulation and Experiment Validation of Cooldown Phase of Selective Laser Sintering (SLS), Solid Freeform Fabrication Symposium, Aug., 2017.

INTEX EX. 1045, Pg. 211
Intex Recreation v. Bestway Inflatables, IPR2023-00489

88. Crowns, K., B, Roberts, J. Beaman, Fatal Launch: Fireworks Fatality and the Determination of Generated Recoil Force, Proceedings of the American Academy of Forensic Sciences, Feb., 2017.
89. Ojinnaka, M. and J. Beaman, “Cyber-Enabled Early Detection of Gas Kicks and Lost Circulation in Real Time”, Proceedings of the 2018 American Control Conference (ACC), Milwaukee, WI, pp XXX, June 2018.

C. Other Major Publications

1. Beaman, J.J., B.E. Platin, J.K. Hedrick, and D.N. Wormley, "Freight Car Operation: Computational Methods and Engineering Data for Response to Track Cross-Level Variation," May 1976, Center for Transportation Studies, MIT
2. Beaman, J.J., "Computer Modeling and Optimization of OBOGS with Contaminants," U.S. Army Medical Research And Development Command, September 1985-1986, (Annual Report)
3. Beaman, J.J, "Design and Testing of a Prototype Shock Distributing Panel," September 24, 1985, Final Report, prepared for Mr. D. Allen and Mr. R. Larry
4. Beaman, J.J., "Physical Modeling with Structured Bond Graphs," September 1986, IBM T. J. Watson Research Center, (Research Report)
5. Beaman, J.J., "State Equations for Structured Bond Graphs," October 1986, IBM T. J. Watson Research Center, (Research Report)
6. Beaman, J.J., "Computer Modeling and Optimization of OBOGS with Contaminants," U.S. Army Medical Research And Development Command, December 31, 1987
7. Beaman, J.J., "On Board Oxygen Generation System (OBOGS) Simulator Manual," April 1988, Brooks Air Force
8. Beaman, J.J., "Oxygen Storage on Zeolites," June 30, 1988, McDonnell Douglas Corporation, (Final Report Task 21)
9. Leroy-Paulay, P. and J.J. Beaman, "Rittage Laser Des Petites Series en Prototypage Rapide," L-usine Nouvelle, No. 2481, 1994, pp 62
10. Beaman, J.J., Barlow, J.W., Vail, N.K., Lee, G.H., Balasubramanian, B., Bourell, D.L., Marcus, H.L., "Selective Laser Sintering of Polymers and Polymer Composites," VII National Conference Of The Mexican Polymer Society, September 29, 1994
11. Beaman J.J., Weiss, L., "Japanese Technology Evaluation Center Panel Report on Rapid Prototyping in Japan and Europe," March 7, 1996, Loyola College, Baltimore, MD
12. Beaman, J.J., Knight, R., Wright, J. , "Prototype Functional Metal Parts by the LSL/HIP Process," 6th European Conference On Rapid Prototyping And Manufacturing, March 24, 1997, University Park, Nottingham, United Kingdom
13. Das, S., Beaman, J.J., Wohlert, M., Bourell, D.L., "Direct Laser Freeform Fabrication of High Performance Metal Components," Proceedings Of The Seventh European Conference On Rapid Prototyping And Manufacturing, July 7-9, 1998, Aachen, Germany
14. Das, S., Beaman, J.J., Wohlert, M., Bourell, D.L., "SLS/HIP - A Direct Freeform Fabrication Process for High Performance Metal Components," Advanced Materials And Processing (PRICM3), Proceedings Of The Third Pacific Rim

International Conference On Advanced Materials And Processing, July 12-18, 1998, Honolulu, HI

15. Das, S., Beaman, J.J., Wohlert, M., Bourell, D.L., "Processing of Titanium Net Shapes by SLS/HIP," 1998 Solid Freeform Fabrication Symposium Proceedings, August 10-12, 1998, Austin, TX
16. Das, S., Fuesting, T.P., Danyo, G., Beaman, J.J., Bourell, D.L., Brown, L.E., Sargent, K., "Direct Laser Fabrication of a Gas Turbine Engine Component-Microstructure and Properties," 1998 Solid Freeform Fabrication Symposium Proceedings, August 10-12, 1998, Austin, TX
17. Das, S., Beaman, J.J., Wohlert, M., Bourell, D.L., "Freeform Fabrication of High Performance Components via SLS/HIP," Proceedings Of The Symposium On Solid Freeform And Additive Fabrication, Vol. Fall 1998 , December 2- 7, 1998, Boston
18. Das, S., Beaman, J.J., Wohlert, M., Bourell, D.L. , "Direct Laser Fabrication of High Performance Components via SLS/HIP," Symposium On Surface Engineering: Science And Technology, March 3, 1999, TMS Annual Meeting, San Diego
19. Das, S., Fuesting, T.P., Beaman, J.J., Bourell, D.L. , "Direct Laser Fabrication of Nickel Superalloy Cermet Turbine Engine Components," Symposium On Surface Engineering: Science And Technology, March 3, 1999, TMS Annual Meeting, San Diego
20. Das, S., Beaman, J.J., Wohlert, M., and Bourell, D.L., "Low Cost Fabrication of High-Performance Metal Components by Selective Laser Sintering/Hot Isostatic Pressing," 10th Annual Advanced Aerospace Materials And Processes Conference, June 24, 1999, ASM International, Dayton, OH
21. Harlan, N.R., Bourell, D., Park, S.M., Beaman, J.J., "Selective Laser Sintering of Zirconia," Proceedings Of The 2000 MRS Spring Meeting, Symposium Y, 2000, edited by D. Dimos, S. Danforth, and F. Prinz
22. Bourell, D.L., Klosterman, D., Gibson, I., Bandyopadhyah, A., Beaman, J.J. , "Freeform Fabrication in Composites Manufacture," ASM Engineered Materials Handbook On Composites, 2nd ed. ed., Vol. 1, 2001
23. Beaman, J.J., "WTEC Hybrid Additive/Subtractive Manufacturing Study Dallas, Texas ," NSF Grantees And Research Conference, January 2004
24. Beaman, J.J., Wood, K.L, Bourell, D.L., Crawford, R.H, Ruizpalacios, R., Rafiully, M., Mignatti, M. , "Laser Direct Write of Novel Optical Components ," 2005 DMII NSF Grantees And Research Conference Scottsdale, AZ, DMI0200283, January 3-6, 2005, NSF
25. Beaman, J.J., Wood, K.L., Tadepalli, S. , "Using Analytical Transformations for Designing Engineering Systems ," 2005 DMII NSF Grantees And Research Conference, Scottsdale, AZ, DMI 0322755, January 3-6, 2005, NSF

D. Non-refereed Conference Proceedings

1. Ahn, S., Murphy, J., Ramos, J.A., Wood, K.L., Beaman, J.J., "Real-Time Measurement of Temperatur for Control of Laser Surface Modification Process," 13th Annual Solid Freeform Fabrication Symposium, University Of Texas At

INTEX EX. 1045, Pg. 213
Intex Recreation v. Bestway Inflatables, IPR2023-00489

Austin, Proceedings Of The Solid Freeform Fabrication Symposium, published by University of Texas at Austin, August 2002, 1st ed., Vol. 19, 1 volumes, pp 1-653

2. Dutson, A.J., Wood, K.L., Crawford, R.H., Beaman, J.J., Bourell, D.L., "Advances in Functional Testing with SFF Parts," 13th Solid Freeform Fabrication Symposium, University Of Texas At Austin, Proceedings Of The Solid Freeform Fabrication Symposium, published by University of Texas at Austin, August 2002, 1st ed., Vol. 19, 1 volumes, pp 1-653
3. Murphy, J. Lappo, K., Wood, K.L., Beaman, J.J., "A Statistical Model of Laer Surface Finishing Using Design of Experiments and ANOVA," 13th Annual Solid Freeform Fabrication Symposium, University Of Texas At Austin, Proceedings Of The Solid Freeform Fabrication Symposium, published by University of Texas at Austin, August 2002, 1st ed., Vol. 1, 1 volumes, pp 1-653
4. Ramos, J.A., Murphy, J., Lappo, K., Wood, K.L., Bourell, D.L., Beaman, J.J., "Single-Layer Deposits of Nickel Base Superalloy by Means of Selective Laser Melting," 13th Solid Freeform Fabrication Symposium, University Of Texas At Austin, Proceedings Of The Solid Freeform Fabrication Symposium, published by University of Texas at Austin, August 2002, 1st ed., Vol. 1, 1 volumes, pp 1-653
5. Bourell, D.L., Beaman, J.J, "Electrochemical Deposition of Metal Ions in Porous Laser Sintered Inter-metallic and Ceramic Preforms," NSF CMMI Grantees Conference, Atlanta, GA, Proceedings Of The 141st TMS Annual Meeting, September 2011

E. Books, Book Chapters Authored/Co-authored, Editor/Co-Editor of Books

i. Books

1. Beaman, J.J., Barlow, J.W., Bourell, D.L., Crawford, R.H., Marcus, H.L., MacAlea, K., Solid Freeform Fabrication: A New Direction In Manufacturing, September 1996, published by Kluwer Publishing, Norwell, MA

ii. Book Chapters

1. Beaman, J.J., "Accuracy of Statistical Linearization," New Approaches For Nonlinear Problems In Dynamics, pp. 195-208, 1980
2. Beaman, J.J., "Chapter 10: Periodic Analysis Of A Nonlinear Diffusion Equation: Freeze And Thaw Of The Earths Surface", Nonlinear System Analysis And Synthesis: Volume 2 - Techniques And Applications, pp. 161- 176, 1980, published by ASME Publication
3. Beaman, J.J., and J.K, Kedrick, "Chapter 16: An Extended Statistical Linearization Technique", Nonlinear System Analysis And Synthesis: Volume 2 - Techniques And Applications, pp. 269-290, 1980, published by ASME Publication
4. Beaman, J.J., and J.K. Hedrick, "Chapter 11: Freight Car Harmonic Response - A Simplified Nonlinear
2. Method", Nonlinear System Analysis And Synthesis: Volume 2 - Techniques And Applications, pp. 177-198, 1980, published by ASME Publication
5. Beaman, J.J., and J.K. Kedrick, "Chapter 18: Control Design By An Extended Statistical Linearization
3. Technique", Nonlinear System Analysis And Synthesis: Volume 2 - Techniques And Applications, pp. 327-344, 1980, published by ASME Publication

INTEX EX. 1045, Pg. 214
Intex Recreation v. Bestway Inflatables, IPR2023-00489

6. Bourell, D.L., Beaman, J.J., Klosterman, J., Gibson, D., Bandyopadkyay, I., "ASM Materials Handbook on Composites," "Rapid Prototyping", ASM Materials Handbook On Composites, pp. 383-387, ASM, 2nd edition, Vol. 21, 1 volumes, 5 pages, 2001, published by ASM, English

iii. Books Edited

1. Bourell, D.L., Klosterman, D., Gibson, I., Bandyopadhyah, A., Beaman, J.J. , "Freeform Fabrication in Composites Manufacture," ASM Engineered Materials Handbook On Composites, 2nd edition, Vol. 1, 2001

F. Reviews

1. Feature article in IEEE Spectrum
2. Journal of Dynamic Systems, Measurement and Control
3. NSF Proposals
4. Transactions of ASME, Journal of Manufacturing Science and Engineering

G. Technical Reports

1. Affordable Turbine Blade Tips, Dayton, OH, April 22, 1998, (Final Review for Air Force)
2. Selective Laser Sintering of HIP Metal Parts, Woods, Hole, MA, May 29, 1998
3. Direct Laser Fabrication of a Gas Turbine Engine Component-Microstructure and Properties, Austin, TX, August 1998, (Contract Report)
4. Low Cost Metal Processing Using SLS/HIP, Washington, DC, November 9, 1998, (Contract Report)
5. Low Cost Metal Processing Using SLS/HIP, Woods Hole, MA, May 26, 1999, (Contract Report)
6. Beaman, J.J., Vacuum Arc Remelting Technical Control Status, Albuquerque, NM, August 11, 1999, (Technical Report)
7. Beaman, J.J., Vacuum Arc Remelting Technical Report/ESR Controller Update, Albuquerque, NM, February 5-7, 2001
8. Beaman, J.J., ESR Controller Update, Albuquerque, NM, May 1-3, 2001
9. Beaman, J.J., Vacuum Arc Remelting Technical Report, Las Vegas, NV, May 20-23, 2001
10. Beaman, J.J., Vacuum Arc Remelting Technical Repor Technical Report, Albuquerque, NM, June 6-7, 2001
11. Beaman, J.J., Vacuum Arc Remelting Technical Report, Los Angeles, CA, June 12-14, 2001
12. Beaman, J.J., Vacuum Arc Remelting Technical Report, Albuquerque, NM, August 8-9, 2001
13. Beaman, J.J., Vacuum Arc Remelting Technical Report, Albuquerque, NM, October 24, 2001
14. Beaman, J.J., Vacuum Arc Remelting Technical Report, Los Alamos, New Mexico, December 17-18, 2001
15. Beaman, J.J., Vacuum Arc Remelting Technical Report, Albuquerque, New Mexico, January 7-8, 2002
16. Beaman, J.J., Vacuum Arc Remelting Technical Report, Los Angeles, CA, January 20-21, 2002
17. Beaman, J.J., Vacuum Arc Remelting Technical Report, Albuquerque, NM, February 4-6, 2002

INTEX EX. 1045, Pg. 215
Intex Recreation v. Bestway Inflatables, IPR2023-00489

18. Beaman, J.J., Vacuum Arc Remelting Technical Report, Albuquerque, NM, March 25-26, 2002
19. Beaman, J.J., Vacuum Arc Remelting Technical Report, Albuquerque, NM, April 29-30, 2002
20. Beaman, J.J., Vacuum Arc Remelting Technical Report, Albuquerque, NM, May 23, 2002
21. Beaman, J.J., Vacuum Arc Remelting Technical Report, Philadelphia, PA, July 1-3, 2002
22. Beaman, J.J., Vacuum Arc Remelting Technical Report, Albuquerque, NM, July 9-10, 2002
23. Beaman, J.J., Vacuum Arc Remelting Technical Report, Albuquerque, NM, August 6, 2002
24. Beaman, J.J., Vacuum Arc Remelting Technical Report, Albuquerque, NM, August 6-8, 2002
25. Beaman, J.J., Vacuum Arc Remelting Technical Report, Monroe, NC, August 19-22, 2002
26. Prinz, F.B., Beaman, J.J., Bourell, D.L., Kammerick, K., Hollister, S., Lewis, J. , Technical Barriers to Progress in Additive/Subtractive Manufacturing, Baltimore, MD, 1-55 pages, March 3, 2003
27. Beaman, J.J., Vacuum Arc Remelting Technical Report, Albuquerque, NM, 1-10 pages, February 2004
28. Beaman, J.J., Vacuum Arc Remelting Technical Report, Las Vegas, NV, 1-10 pages, June 2004
29. Beaman, J.J., Solid Freeform Fabrication: Advance to Manufacturing, Providence, RI, none pages, November, 2004
30. Beaman, J.J., Advances in Vacuum Arc Remelting Technical Report, Albuquerque, NM, none pages, February 16, 2005
31. Beaman, J.J., Advances in Vacuum Arc Remelting Technical Report, Las Vegas, NV, none pages, June 14-16, 2005
32. Beaman, J.J., Advances in Vacuum Arc Remelting Technical Report, Albuquerque, NM, none pages, February 15, 2006
33. Beaman, J.J., Advances in Vacuum Arc Remelting Technical Report, Albuquerque, NM, none pages, August 9, 2006
34. Beaman, J.J., Advances in Vacuum Arc Remelting Theory, Albuquerque, NM, February 2007
35. Beaman, J.J., Advances in Vacuum Arc Remelting Technology, Las Vegas, NV, February 2008
36. Beaman, J.J., Advances in Vacuum Arc Remelting Technology, Las Vegas, NV, August 2008
37. Beaman, J.J., Williamson, R.L., Solidification Controller Tests, Los Alamos NM, January 2009
38. Beaman, J.J., Advances in Vacuum Arc Remelting Technology, Las Vegas, NV, February 2009
39. Beaman, J.J., Advances in Vacuum Arc Remelting Technology, Austin, TX, August 2009

40. Beaman, J.J., Williamson, R.L., Solidification Controller Tests, Los Alamos NM, February 2010
41. Beaman, J.J., Advances in Vacuum Arc Remelting Technology, Austin, TX, March 2010
42. Beaman, J.J., Advances in Vacuum Arc Remelting Technology, Las Vegas, NV, August 2010
43. Beaman, J.J., Advances in Vacuum Arc Remelting Technology, Austin, TX, October 2010
44. Beaman, J.J., Williamson, R.L., Solidification Controller Tests, Los Alamos NM, February 2011
45. Beaman, J.J., Advances in Vacuum Arc Remelting Technology, Austin, TX, February 2011
46. Beaman, J.J., Williamson, R.L., Solidification Controller Tests, Los Alamos NM, July 2011
47. Beaman, J.J., Advances in Vacuum Arc Remelting Technology, Austin, TX, August 2011

ORAL PRESENTATIONS:

A. Invited or Keynote Speeches

1. Beaman, J.J., "Part Generation by Layerwise Selective Sintering," National Science Foundation for Expedited Award for Novel Research Grant, Washington, D.C., September 20, 1989
2. Beaman, J.J., "Solid Freeform Fabrication: An Emerging Manufacturing Technology," Guest Lecture Series, Carnegie Mellon University, Pittsburgh, PA, March 15, 1990
3. Beaman, J.J., "Academic Selective Laser Sintering Research," Central Texas Chapter of ASME, Balcones Research Center, Austin, TX, December 13, 1993
4. Beaman, J.J., "Recent Advances on Next Generation Manufacturing Technologies," 1997 International Mechanical Engineering Congress and Exposition, ASME International, Dallas, TX, November 20, 1997, (panel discussion)
5. Beaman, J.J., "Direct Fabrication by Selective Laser Sintering," Third Pacific Rim International Conference on Advanced Materials and Processes, Honolulu, HI, July 12-16, 1998
6. Beaman, J.J., "Solid Freeform Fabrication Overview," 1998 Selective Laser Sintering Users Group Conference, Austin, TX, September 1, 1998
7. Beaman, J.J., "Advances in Selective Laser Sintering," Manufacturing Series Rapid Prototyping and Manufacturing Career-Enhancement Courses, Southern Methodist University, Dallas, TX, September 18, 1998
8. Beaman, J.J., "Modern Manufacturing Methods: It's Impact on Industrial Design," Symposium on Industrial Design, presented by the Pontifical Catholic University of Chile, School of Design, Santiago, Chile, November 6, 1998
9. Beaman, J.J., "Solid Freeform Fabrication-Macroscopic Objects to Fine Featured Components," Rapid

INTEX EX. 1045, Pg. 217
Intex Recreation v. Bestway Inflatables, IPR2023-00489

1. Manufacturing/The Factory-After-Next Workshop sponsored by Vanderbilt University and the US Army Research Office, Nashville, TN, December 13-15, 1998
10. Beaman, J.J., "Solid Freeform Fabrication," Engineering Foundation Advisory Council, College of Engineering, University of Texas at Austin, TX, February 20, 1999
11. Beaman, J.J., Hysinger, C.L., Williamson, R.L. and Melgaard, D.K., "Multiple Input Electrode Gap Control During Vacuum Arc Remelting," 1999 International Symposium on Liquid Metal Processing and Casting, sponsored by the Vacuum Metallurgy Division, American Vacuum Society, Santa Fe, NM, February 23, 1999
12. Das, S., Wohlert, M., Beaman, J.J., Bourell, D.L., "Direct Laser Fabrication of High Performance Metal Components via SLS/ HIP," 129th TMS Annual Meeting, Nashville, TN, March 2000
13. Harlan, N., Park, S-M., Beaman, J.J., Bourell, D.L., "Selective Laser Sintering with Meso-Scale Features," 129th TMS Annual Meeting, Nashville, TN, March 2000
14. Harlan, N., Park, S-M., Bourell, D.L., Beaman, J.J., "Zirconia Molds for Titanium Casting," 129th TMS Annual Meeting, Nashville, TN, March 2000
15. Harlan, N.R., Bourell, D., Park, S-M., Beaman, J.J., "Selective Laser Sintering of Zirconia," 2000 MRS Spring Meeting and Symposium, San Francisco, CA, April 2000
16. Wohlert, M., Bourell, D.L., Das, S., Beaman, J.J., "Applications of Powder Densification Maps to Direct Metal SLS/HIP Processing," Eleventh Solid Freeform Fabrication Symposium, University of Texas, Austin, TX, August 2000
17. Beaman, J.J., "Solid Freeform Fabrication at the University of Texas, Present, Past, Future," Purdue University, Lafayette, IN, September 27-29, 2000
18. Beaman, J.J., "Developing an NSF Initiative for Nanotechnology," International Mechanical Engineering Congress & Exposition, Orlando, FL, November 5-6, 2000, (panel discussion)
19. Beaman, J.J., "Solid Freeform Fabrication at the University of Texas," Schlumberger, Houston, TX, December 6-7, 2000
20. Beaman, J.J., "Solid Freeform Fabrication Research at the University of Texas," IAT, Pickle Research Center, University of Texas at Austin, December 13, 2000
21. Beaman, J.J., "Optimal Filtering Applied to the Vacuum Arc Remelting Process," New Orleans, Louisiana, 2001, (2001 TMS Annual Meeting and Exhibition: Sampling, Sensors & Control for High Temperature Metallurgical Processes)
22. Beaman, J.J., "Nanoscale Facility Working Group," NSF Meeting, Tampa, FL, January 10, 2001
23. Beaman, J.J., "Optimal Filtering Applied to the Vacuum Arc Remelting Process," 2001 TMS Annual Meeting and Exhibition: Sampling, Sensors & Control for High Temperature Metallurgical Processes, New Orleans, LA, February 10-14, 2001
24. Dutson, A.J., K.L. Wood, J.J. Beaman, R.H. Crawford, "A Study of Functional Testing with SFF Parts," The University of Texas at Austin, August 7 - 9, 2002, (Annual Solid Freeform Fabrication Symposium, Thompson Conference Center)

INTEX EX. 1045, Pg. 218
Intex Recreation v. Bestway Inflatables, IPR2023-00489

25. Beaman, J.J., "Rapid Prototyping & Manufacturing Conference sponsored by the Rapid Prototyping Association of the Society of Manufacturing Engineers," Chicago, IL, May 12-15, 2003
26. Beaman, J.J. , International Symposium on Liquid Metal Processing & Casting, LMPC 2003, Nancy, France, September 3, 2003
27. Evans, R.S., Bourell, D.L., Beaman, J.J., Campbell, M.I., "Reaction Bonded Silicon Carbide: SFF, Process Refinement and Applications," Ibaraki University Lecture Series, Hitachi, Japan, October 10, 2003 28. Lappo, K., Jackson, B., Wood, K.L., Beaman, J.J., Bourell, D.L. , "Discrete Multiple Material Selective Laser Sintering (M2SLS): Experimental Study of Part Processing," Ibaraki University Lecture Series, Hitachi, Japan, October 10, 2003
28. Beaman, J.J. , Specialty Metals Symposium Workshop, Sandia Laboratories, Cleveland, OH, December 8-11,2003
29. King, C.W., Campbell, M.I., Beaman, J.J., "On the Design Synthesis of Multistable Equilibrium Systems ," ASME
30. Beaman, J.J. , "Future Directions: WTEC Hybrid Additive/Subtractive Manufacturing Study," Dallas, TX, January 8, 2004, (For Julie Chen, NSF Program Director Nanomanufacturing)
31. Rosen, D.W., Atwood, C., Beaman, J.J., Bourell, D.L., Bergman, T., Hollister, S., "Results of WTEC Additive/Subtractive Manufacturing Study of European Research," SME Rapid Prototyping & Manufacturing Conference, Dearborn, MI, May 10-13, 2004
32. Beaman, J.J., "Solid Freeform Fabrication," Materials Research Society Fall Meeting 2004, Boston, MA, November 2004
33. Beaman, J.J., "Solid Freeform Fabrication: Advance to Manufacturing," CNO Strategic Studies Group, Department of the Navy, Office of the Chief Naval Operations, Providence, RI, November 2004
34. Beaman, J.J., Bourell, D.L., Evans, R.S., "Materials Issues Rapid Manufacturing," 2004 Materials Research Society Fall Meeting, Boston, MA, November 29-30, 2004
35. Beaman, J.J., Ruiziplacios, R., Wood, K.L., "Direct Write of Optical Components," 2004 Materials Research Society Fall Meeting, Boston, MA, November 29-30, 2004
36. Beaman, J.J., "Overview of the WTEC Additive/Subtractive Manufacturing Student of European Research for Recent Advances in Bio Manufacturing; Design and Fabrication of Prostheses/Ortheses using Selective Laser Sintering," NSF International Workshop for Biomanufacturing, Tsinghua University, Beijing, China, June, 2005
37. Beaman, J.J., "Direct Digital Manufacturing/Rapid Response Manufacturing," Small Lot Intelligent Manufacturing Conference, Santa Fe, NM, September 2005
38. Stevinson, B., Chen, S., Bourell, D.L., Beaman, J.J., Wood, K.L., "Rapid Manufacturing by Pressureless Infiltration of Non-Metallic Selective Laser Sintered Preforms First International Conference on Rapid Manufacturing," Loughborough, England, July 5-6, 2006
39. Beaman, J.J. , "Models of Uncertainty and Reduced Order Physical Models," Pan-American Advanced Studies Institute (PASI) Porto Alegre, Brazil, June 7, 2007

INTEX EX. 1045, Pg. 219
Intex Recreation v. Bestway Inflatables, IPR2023-00489

40. Beaman, J.J. , "Infiltration to Produce Non-Polymeric Selective Laser Sintered (SLS) Parts," International Conference on Rapid Manufacturing Loughborough University, UK, July 12, 2007
41. Beaman, J.J. , "Building a Star Trek Replicator," Honors Colloquium, The University of Texas at Austin, Austin TX, July 26, 2007
42. Beaman, J.J., Williamson, R.L., Melgaard, D.K., Aikin, R.M., Ermann,R.G., "Vacuum arc remelting pool power control," LMPC Annual Meeting, Nancy, France, September 2007
43. Beaman, J.J. , "Metal and ceramic powders densification in selective laser sintering," Leiria, Portugal, September 2007
44. Beaman, J.J., "Solid Freeform Fabrication Research at The University of Texas at Austin," Louisiana State University,
2. Department of Mechanical Engineering, November 2007
45. Beaman, J.J. , "Innovations in Mechanical Engineering," NASA/Johnson Space Center Summit - The University of Texas at Austin, April 2008
46. Beaman, J.J. , "Technology and Issues for Small Lot Manufacturing," DARPA HITMan Study Panel Meeting, Arlington,VA, November 6, 2008
47. Beaman, J.J., "Advances in the University of Texas at Austin Department of Mechanical Engineering," University of Texas at Austin Mechanical Engineering Alumni Luncheon, Houston TX, November 10, 2008
48. Beaman, J.J., "Creating Startups and Commercialization: Faculty Who Make It Work," University of Texas at Austin Office of Technology Commercialization's 5th 'Ready to Commercialize' Conference, Austin, TX, November 18, 2008
49. Beaman, J.J., Ahn, S. , "Estimation of Electroslag Remelting Process with an Unscented Kalman Filter," LMPC Annual Meeting, Santa Fe, NM, September 2009
50. Beaman, J.J., "Solid Freeform Fabrication research at The University of Texas at Austin," Auburn University, Auburn, AL, October 2009
51. Beaman, J.J., "Successful University Collaboration for Technology Development," 12th Aerospace Automation Consortium, Seattle, WA, November 2009
52. Beaman, J.J., "Advances in the Mechanical Engineering Department at The University of Texas at Austin," Lockheed Martin Day/UT ME Alumni Luncheon, February 2010
53. Beaman, J.J., "Advances in the Mechanical Engineering Department at The University of Texas at Austin," NASA/UTME Alumni Luncheon, Houston TX, March 2010
54. Beaman, J.J., "Recruitment of Women in Engineering at The University of Texas at Austin," ASEE Engineering Research Council Annual Conference, Arlington, VA, March 2010
55. Beaman, J.J., "A Next Generation VAR Controller and it's use for 3D defect investigation in Superalloys," LMPC Annual Meeting, Nancy, France, September 2010
56. Beaman, J.J., "Next Generation VAR Controller," Ecole des Mines, Nancy, France, September 2010

INTEX EX. 1045, Pg. 220
Intex Recreation v. Bestway Inflatables, IPR2023-00489

57. Beaman, J.J. and A. Mok, "Concurrent Garage Shop Design and Production Using the Internet," Boston, MA, July 2012, (NSF Manufacturing Workshop)
58. Beaman, J.J., "3D Printing, Additive Manufacturing, and Solid Freeform Fabrication," Washington, DC, July 2012, (High Confidence Software and Systems (HCSS) Coordinating Group (CG) of the Federal Networking and Information Technology R&D (NITRD) Subcommittee)
59. Beaman, J.J., "3D Printing, Additive Manufacturing, and Solid Freeform Fabrication," Portland, OR, August 2012, (Presentation to Science Board of ESI Corporation)
60. Beaman, J.J., "3D Printing, Additive Manufacturing, and Solid Freeform Fabrication: The Technologies of the Past, Present and Future", Invited Talk, NSF Workshop in Additive Manufacturing, July 2103.
61. Beaman, J.J., "3D Printing, Additive Manufacturing, and Solid Freeform Fabrication", Invited talk at 3M, Minneapolis, June 2013.
62. Beaman, J.J., "Emerging Nexus of Cyber, Modeling, and Estimation in Advanced Manufacturing", Invited Keynote and Kickoff lecture, Dynamic Systems and Control Conference, October 2013.
63. Beaman, J. J., Fish, S., Bourell, D. L., and Leigh, D. K., "History and Development of Process Control for Additive Manufacturing," American Society of Precision Engineers, Berkeley, CA, 2014.
64. Beaman. J.J., "History & Development of Process Control for Additive Manufacturing (Selective Laser Sintering)", Sandia National Lab, Oct. 2014.
65. Beaman, J.J., "3D Printing, Additive Manufacturing, and Solid Freeform Fabrication", NOVA lecture, University of Texas, Oct., 2014.
66. Beaman, J.J., "Interviewing for a Faculty Position", GEC talk, Nov. 2014.
67. Beaman, J.J., "3D Printing, Additive Manufacturing, and Solid Freeform Fabrication
    The Technologies of the Past, Present and Future", University of Texas Chevron Lecture, Jan. 2015.
68. Beaman, J.J., "3D Printing, Additive Manufacturing, and Solid Freeform Fabrication
    The Technologies of the Past, Present and Future", Keynote, American Physical Society, Mar. 2015.
69. Beaman, J.J., C. Seepersad, S. Fish, D. Leigh, "SXSW AM Panel Discussion", Mar. 2015.
70. Beaman, J.J., D. Rosen, B. Stucker, C. Williams, "ASME Design Conference Panel on AM", Jul. 2015.
71. Beaman, J.J., B. Hebner, C. Seepersad, "Introduction to Additive Manufacturing at the University of Texas at Austin", Air Force Material Command, May, 2015.

B. Presentation at Technical Meetings

1. Beaman, J.J., "Periodic Analysis of a Nonlinear Diffusion Equation: Applicable to the Freeze and Thaw of the Earth's Surface," ASME, Winter Annual Meeting, December 1976

INTEX EX. 1045, Pg. 221
Intex Recreation v. Bestway Inflatables, IPR2023-00489

2. Beaman, J. J. and D. Garg, "Nonlinear Controller Synthesis," 979 Joint Automatic Control Conference (JACC), Denver, CO, June 17-20, 1979
3. Beaman, J.J., "Extended Statistical Linearization," 1979 Joint Automatic Control Conference (JACC), Denver, CO, June 17-10, 1979
4. Beaman, J.J., "Improved Statistical Linearization for Analysis and Control of Nonlinear Stochastic Systems," ASME Winter Annual Meeting, New York, NY, December 1979
5. Beaman, J.J., "Accuracy of Statistical Linearization," ASME Winter Annual Meeting, Chicago, IL, November 1980
6. Beaman, J.J., "A Dynamic Model of a Molecular Sieve Bed with Nonlinear and Coupled Isotherms," ASME Winter Annual Meeting, Washington, D. C., November 1981
7. Beaman, J.J., "Nonlinear Quadratic Gaussian Control," ASME Winter Annual Meeting, Washington, D. C., November 1981
8. Beaman, J.J., "Nonlinear Quadratic Gaussian Control," 1982 Joint Automatic Control Conference, (JACC), Arlington, VA, June 1982
9. Beaman, J.J., "Modeling of OBOGS," Institute of Aviation Medicine, R.A.F., Farnsborough, U.K., July 1982
10. Beaman, J.J., "Statistical Linearization and Optimal Quadratic Control Design," Colloquium on Decision and Control, University of Texas at Austin, October 20, 1982
11. Beaman, J.J., "Application of Statistical Linearization and LQG Designs to Position Control," 1983 American Control Conference (ACC), San Francisco, CA, June 1983
12. Beaman, J.J., "Application of NQG Control with Uncertain and Incomplete Measurements," 1984 ACC, San Diego, CA, June 1984
13. Beaman, J.J., "Physical Modeling with Eulerian Frames and Bond Graphs," 1985 ASME Winter Annual Meeting, Miami, FL, 1985
14. Beaman, J.J., "Microprocessor Implementation of NQG Control," 1985 ACC, Boston, MA, June 1985
15. Beaman, J.J., "Physical System Modeling with Bond Graphs," IBM Watson Research Laboratory, December 1985
16. Beaman, J.J., "Quadratic Gaussian Control of Nonlinear Actuators," Ford Motor Research and General Motors Research
1. enter, January 1986
17. Beaman, J.J., "Design Assessment for Reliability Tool," Manufacturing Research, IBM T.J. Watson Research Center, September 1986
18. Beaman, J.J., "Dart Design Assessment for Reliability Tool," General Motors Research, November 1986
19. Beaman, J.J., "Structured Modeling of Physical Systems Using Bond Graphs," Texas A & M University, College Station, TX, April 1987
20. Beaman, J.J. and C.R. Deckard, "Solid Freeform Fabrication and Selective Powder Sintering," North American Manufacturing Research Conference, Ann Arbor, MI, May 1987
21. Beaman, J.J. and R.C. Rosenberg, "Clarifying Implicit Storage Field Structure," American Control Conference, Minneapolis, MN, June 1987

INTEX EX. 1045, Pg. 222
Intex Recreation v. Bestway Inflatables, IPR2023-00489

22. Beaman, J.J. and R.C. Rosenberg, "Physical Modeling with Structured Bond Graphs," American Control Conference, Minneapolis, MN, June 1987
23. Beaman, J.J. and C.R. Deckard, "Part Generation by Selective Laser Sintering," Texas Instruments Industrial Automation Intra-Company Objective Group, Dallas, TX, September 1987
24. Beaman, J.J. and C.R. Deckard, "Part Generation by Selective Laser Sintering," NSF Manufacturing Systems Research Conference, Ann Arbor, MI, October 1987
25. Beaman, J.J. and H.M. Paynter, "On the Fall and Rise of the Circuit Concept: Contrasting Views of Network Thermo and Chemical Networking," 1987 ASME Winter Annual Meeting, Boston, MA, December 1987
26. Beaman, J.J., "Application of Nonlinear Quadratic Stochastic Control to a Position Servomechanism," 1987 ASME Winter Annual Meeting, Boston, MA, December 1987
27. Beaman, J.J. and C.R. Deckard, "Process and Control Issues in Selective Laser Sintering," ASME Winter Annual Meeting, Chicago, IL, December 1988
28. Beaman, J.J., M.E. Ingrim and G.Y. Masada, "Bond Graph Reticulation of Galerkin Approximations in
2. Thermoelasticity," 1988 ASME Winter Annual Meeting, Chicago, IL, December 1988
29. Beaman, J.J., with R. Da Silva and K. Wood, "Representing and Manipulating Interacting and Interfeature Relationships in Engineering Design for Manufacture," 1990 ASME Design Automation Conference, Chicago, IL, September 16-19, 1990
30. Beaman, J.J., "Selective Laser Sintering of Metals," ASME Annual Meeting, November 1, 1994
31. Beaman, J.J., "Solid Freeform Fabrication," Manufacturing 2002 Lecture Series, University of Texas at Austin, TX, February 24, 1995
32. Beaman, J.J., D.L. Bourell, J.W. Barlow, G. Lee, N. Harlan, S. Das, "Solid Freeforming of Affordable Turbine Blade Tips," Allison Engine Co./Air Force, University of Texas at Austin, Austin, TX, January 19, 1996
33. Beaman, J.J., L. Weiss, "Japanese Technology Evaluation Center Panel Report on Rapid Prototyping in Japan and Europe," Workshop on Rapid Prototyping in Japan and Europe, National Science Foundation, Department of Energy, Advanced Research Projects Agency, Office of Naval Research, Department of Commerce, Washington D.C., March 7, 1996
34. Beaman, J.J., D.L. Bourell, J.W. Barlow, R.H. Crawford, H.L. Marcus, L.E. Weiss, "Current and Future Trends in Solid Freeform Fabrication," The International Society for Optical Engineering, Volume 2910, Boston, MA, November 18-19, 1996
35. Beaman, J.J., C.L. Hysinger, R.L. Williamson and M.E. Schlienger, "Modern Control Strategies for Vacuum Arc Remelting of Segregation Sensitive Alloys," Fourth International Special Emphasis Symposium on Superalloys 718, 625, 706 and Derivatives, The Minerals, Metals and Materials Society, Pittsburgh, PA, June 15-18, 1997
36. Beaman, J.J. and Jepson, L.R., "Selective Laser Sintering Processing of Functionally Gradient Materials Poster Paper," National Science Foundation

INTEX EX. 1045, Pg. 223
Intex Recreation v. Bestway Inflatables, IPR2023-00489

Design and Manufacturing Grantees Conference, Monterrey, Mexico, January 5, 1998

37. Beaman, J.J., "Solid Freeform Fabrication," National Science Foundation Design and Manufacturing Grantees Conference, Monterrey, Mexico, January 5, 1998
38. Beaman, J.J. and Das, S., "Microstructure and Properties of Cermet Composite Abrasive Blade Tips Produced by Direct Laser Processing," Minerals, Metals, Materials Annual Meeting, San Antonio, TX, February 16, 1998
39. Beaman, J.J., Das, S., Wohlert, M., and Bourell, D.L., "Freeform Fabrication of High Performance Components via SLS/HIP," Proceedings of the Symposium on Solid Freeform and Additive Fabrication, Fall 1998 meeting of the Materials Research Society, Boston, MA, December 2, 1998
40. Beaman, J.J., and Jepson, L., "Multiple Materials Selective Laser Sintering," 1999 National Science Foundation Design and Manufacturing Grantees Conference, Queen Mary, Long Beach, CA, January 5-8, 1999, (poster session)
41. Beaman, J.J. and Tetzlaff, D., "ESR Controls and VAR Controls," Symposium on Liquid Metal Processing, Sandia National Laboratories, Santa Fe, NM, February 2-3, 1999
42. Beaman, J.J., "Solid Freeform Fabrication Current Research and Future Directions," Joint Defense Advanced Research Projects Agency/Office of Naval Research at the Institute for Defense Analyses, Arlington, VA, February 11, 1999
43. Beaman, J.J. and Das, S., Fuesting, T.P., and Bourell, D.L., "Direct Laser Fabrication of Nickel Superalloy Cermet Turbine Engine Components," Symposium on Surface Engineering: Science and Technology, 1999 Minerals, Metals Society Conference, San Diego, CA, March 3, 1999
44. Beaman, J.J. and Das, S., Wohlert, M., and Bourell, D.L., "Direct Laser Fabrication of High Performance Metal Components Via SLS/HIP," Symposium on Surface Engineering: Science and Technology, 1999 Minerals, Metals Society Conference, San Diego, CA, March 3, 1999
45. Beaman, J.J., Tetzlaff, D., "Modeling and Control of the Electroslag Remelting Process," Amarillo National Resource Center for Plutonium 1999 Researchers' Conference, Amarillo, TX, July 20, 1999
46. Beaman, J.J., Das, S., Wohlert, M., and Bourell, D.L., "Direct Laser Fabrication of High Performance Metal Components via SLS/HIP," Solid Freeform Fabrication Symposium Proceedings 1999, The University of Texas at Austin, Austin, TX, August 12, 1999
47. Beaman, J.J., "Project Planning for Sandia Research," SMPC Technical Workshop, Cleveland, OH, December 12, 2000
48. Beaman, J.J., 2001 ASME Leadership Workshop, Orlando, FL, January 15-17, 2001
49. Beaman, J.J., Ruizpalacios, R., "Direct Write of Novel Optical Components," 2005 NSF Design, Service and manufacture and Industrial Innovation Grantees and Research Conference: Manufacturing for the New Millennium: New Products, Services, Technologies and Economic Development, Scottsdale, AZ, January, 2005
50. Beaman, J.J., Ruizpalacios, R., Tadepalli, S., "Empirical Similitude," 2005 NSF Design, Service and manufacture and Industrial Innovation Grantees and

INTEX EX. 1045, Pg. 224
Intex Recreation v. Bestway Inflatables, IPR2023-00489

Research Conference: Manufacturing for the New Millennium: New Products Services, Technologies and Economic Development, Scottsdale, AZ, January 2005

51. Bourell, D.L., Beaman, J.J., "Rapid Manufacturing Materials Fundamentals MS&T '05 ," Pittsburgh PA, September 26, 2005
52. Herlehy, J., Murphy, J., Chen, S., Koraishy, B., Bourell, D.L., Wood, K.L., Beaman, J.J., Crawford, R.H., "Design of a Test Platform for Performance Evaluation of SLS Proton Exchange Membrane Fuel Cells ," Solid Freeform Fabrication Symposium, Austin TX , August 15, 2006
53. Bourell, D.L., Beaman, J.J. , "Processing and Properties of Power-Based Materials," TMS Annual Meeting, San Diego, CA, March 2011
54. Beaman, J.J., Williamson, R.L., Lopez, L.F., "A reduced-order thermal model for dynamic VAR pool depth control," LMPC 2011 Conference - Nancy, France, September 2011
55. T.T. Diller, M.M. Yuan, D.L. Bourell and J.J. Beaman, "Thermal Characterization of Laser Sintering of Nylon-12," Leira, Portugal, September 2011
56. David Leigh, David Bourell, Joseph J. Beaman, "Effect of In-Plane Voiding on the Fracture Behavior of Laser Sintered Polyamide," St Louis MO, June 2012
57. Keynote talk, Additive Manufacturing Symposium, Institute of Industrial Science, University of Tokyo, Jan, 2017.
58. Invited talk, Workshop on Electromagnetic Effects in Materials Synthesis, Carnegie Mellon University, Office of Naval Research, Jun, 2017.
59. Invited Talk, Additive Manufacturing, presented and broadcast to all interested Patent Examiners, United States Patent Office, Jul, 2017.
60. Invited Talk, Additive Manufacturing, National Science Foundation Workshop on Manufacturing for the Defense Industry, Arlington, Texas, Jul, 2017.

C. Other Oral Presentations

1. Beaman, J.J., "Application of NQG to Position Control," Colloquium on Decision and Control, University of Texas, Austin, September 27, 1983
2. Beaman, J.J., "Solid Freeform Fabrication: A Prototype Manufacturing Process," National Science Foundation Program Review, June 1988, (invited speaker)
3. Beaman, J.J., "Solid Freeform Fabrication," Sandia National Laboratories, Albuquerque, NM, September 1988, (invited seminar)
4. Beaman, J.J., "Progress in Selective Laser Sintering," Design Manufacturing and Computer Integrated Engineering Grantees Conference, National Science Foundation, University of California at Berkley, CA, January 1989
5. Beaman, J.J., "Solid Freeform Fabrication Manufacturing," Engineering Technology Dept., Texas A & M University, College Station, TX, March 1989
6. Beaman, J.J., "Solid Freeform Fabrication," Presentation for Focus Group on Future Technologies, LBJ School of Public Affairs, Austin, TX, April 1989
7. Beaman, J.J., "Removal of Toxic Catalytic Oxidation Products Via Adsorption," 1989 US Army Chemical Research, Development and Engineering Center Conference, Aberdeen Proving Ground, MD, November 17, 1989

INTEX EX. 1045, Pg. 225
Intex Recreation v. Bestway Inflatables, IPR2023-00489

8. Beaman, J.J., and G. Munkvold, "Onboard Oxygen Generation Systems Modeling: Three Component Feeds," SAFE Association Symposium, New Orleans, LA, December 7, 1989
9. Beaman, J.J., "The System Modeling Curriculum at The University of Texas," ASME Winter Annual Meeting, San Francisco, CA, December 12, 1989
10. Beaman, J.J., R.D. Matthews, S. Dongre and D. Schoppe, "Development and Analysis of a Model for Transient Operation of an SI Engine," The Engineering Society for Advancing Mobility Land, Sea, Air and Space International Congress and Exposition, Cobo Center, Detroit, MI, February 25, 1991
11. Beaman, J.J., "Physical Mechanisms in Selective Laser Sintering," Polymeric Materials in Rapid Prototyping Conference, Centre De Transfert De Technologie, Le Mans, France, October 24, 1994
12. Beaman, J.J., "Abrasive Turbine Blade Tip Manufacture Using Selective Laser Sintering," Allison Gas Turbine, Wright Patterson AFB, November 4, 1994
13. Beaman, J.J., "VAR Drip Short Controller Implementation," Sandia National Laboratories, Albuquerque, NM, December 15, 1994
14. Beaman, J.J., "Freeform Fabrication: Modeling and Control," University of Michigan, Ann Arbor, MI, February 16, 1995
15. Beaman, J.J., "Solid Freeform Fabrication," Senate Hearing on International Relations, Trade and Technology, Dallas, TX, April 26, 1996
16. Beaman, J.J., "Low-Cost Metal Processing Using SLS/HIP," DARPA Technology Interchange Meeting, Institute for Defense Analyses, Alexandria, VA, May 8-10, 1996
17. Beaman, J.J., "Industrial Process Control, An Overview," Sandia National Laboratories, Albuquerque, NM, July 31, 1996
18. Beaman, J.J., "Successful Case Studies," Intellectual Property Workshop, University of Texas, Austin, TX, January 16, 1998
19. Beaman, J.J., "Affordable Turbine Blade Tips," Wright Patterson Air Force Base, Dayton, OH, April 22, 1998, (final review)
20. Beaman, J.J., "Selective Laser Sintering of HIP Metal Parts," ONR University Materials Review, at National Academy of Sciences Study Center, Woods, Hole, MA, May 29, 1998

PATENTS AND COPYRIGHTED SOFTWARE:

1. Beaman, J.J., Deckard, C.R., "Selective Laser Sintering with Assisted Powder Handling," US 4,938,816 A, USA, 1990
2. Bourell, D.L., Marcus, H.L., Barlow, J.W., Beaman, J.J., Deckard, C.R., "Multiple Material Systems for Selective Beam Sintering," US 4,944,817 A (1990), US 5,076,869 A (1991), US 5,382,308 A (1995), USA, 1990, 1991, 1995
3. Beaman, J.J., Deckard, C.R. , "Selective Laser Sintering with Assisted Powder Handling," US 5,053,090 A, USA, 1991
4. Deckard, C.R., Beaman, J.J., Darrah, J.F., "Method for Selective Laser Sintering with Layerwise Cross-Scanning," US 5,155,324 A, USA, 1992
5. Grube, K.W., Beaman, J.J., "Radiant Heating Apparatus for Providing Uniform Surface Temperature Useful in Selective Laser Sintering," US 5,155,321, USA, 1992

INTEX EX. 1045, Pg. 226
Intex Recreation v. Bestway Inflatables, IPR2023-00489

6. Beaman, J.J., "Thermal Control of Selective Laser Sintering Via Control of the Laser Scan," US 5,352,405 A, USA, 1994
7. Barlow, J.W., Balasubramanian, B., Beaman, J.J., Bourell, D.L., Crawford, R.H., Marcus, H.L., Tobin, J.R., Vail, N.K., "Mold Useful for Injection Molding of Plastics and Methods of Production and Uses Thereof," US 5,678,162, USA, 1997
8. Freitag, D.W., Beaman, J.J., Bourell, D.L., "Laser Directed Fabrication of Full-Density Metal Articles Using Hot Isostatic Processing," US 5,640,667, USA, 1997
9. Beaman, J.J., Deckard, C.R., Bourell, D.L., Marcus, H.L., Barlow, J.W., "Multiple Material System and Assisted Powder Handling for Selective Beam Sintering," ES 2 111 408 T3, Espana, 1998
10. Beaman, J J., Hysinger, C.L., Melgaard, D.K., Williamson, R.L., "Multiple Input Electrode Gap Controller," US 5,930,284 A, USA, 1999
11. Bourell, D.L., Marcus, H.L., Barlow, J.W., Beaman, J.J., Deckard, C.R., "Multiple Material System and Assisted Powder Handling for Selective Beam Sintering," KR 100190799 B1, International, 1999
12. Bertram, L.A., Williamson, R.L., Melgaard, D.K., Beaman, J.J., Evans, D.G., "Dynamic Control of Remelting Processes," US 6,115,404 A, USA, 2000
13. Barlow, J.W., Lee, G., Crawford, R.H., Beaman, J.J., Marcus, H.L., Lagow, R.J., "Artificial Bone Implants," US 6,183,515 A1 (2001), US 0,005,797 A1 (2001), US 6,540,784 B2 (2003), USA, 2001, 2002, 2003
14. Brown, L.E., Fuesting, T.P., Beaman, J.J., Das, S., "Method and Apparatus for Making Components by Direct Laser Processing," US 6,355,086 B2 (2002), USA, 2002
15. Das, S., Beaman, J.J., "Direct Selective Laser Sintering of Metals," US 0,015,654 A1 (2002), US 6,676,892 (2004), USA, 2002, 2004
16. Barlow, J.W., Lee, G., Crawford, R.H., Beaman, J.J., Marcus, H.L., Lagow, R.J., "Method and System for Fabricating Artificial Bone Implants," US 0,069,638 A1, USA, 2003
17. Beaman, J.J., Bourell, D.L., Wang, H., Park, S., "Method for Fabricating Siliconized Silicon Carbide Parts," US 0,130,055 A1, USA, 2004
18. Melgaard, D.K., Beaman, J.J., Shelmidine, G.J., "Electrode Immersion Depth Determination and Control in Electroslag Remelting Furnace," US 7,180,931 B1, USA, 2007
19. Beaman, J.J. and R. L. Williamson, "Pool Power Control in Remelting Systems," USPTO, 8,077,854, US, 2011
20. Otero, J, Beaman, J.J., Zimbroff, A., Roy, K., “Methods, Compositions, and Devices for the Occlusion of Cavities and Passageways, Provisional Patent, 2013.
21. Horton, R., Beaman, J.J., Nga, T., Devaraj, V., “Design of Catheter-Adjustable Mitral Valve Annulplasty Device”, Provisional Patent, 2013.
22. Fish, S, Beaman, JJ., Bryant, A., Leigh, D., Kubiak, S., Booth, C., “Real-Time Process Control for Additive Manufacturing”, Provisional Patent, 2014.
23. Milner, T., McElroy, A., Beaman, J., Fish, S., “Optical-Choerence-Tomography Guided Additive Manufacturing and Laser Ablation of #D Printed Parts”, Provisional Patent, 2015.

INTEX EX. 1045, Pg. 227
Intex Recreation v. Bestway Inflatables, IPR2023-00489

24. Williamson, R.L. and J. Beaman, “Ingot Solidification Controller for Vacuum Arc Remelting, US 9,220,131, 2015.

GRANTS AND CONTRACTS (Current Only):

1. Various Donors, Solid Freeform Fabrication, $597,500, with D. Bourell, (1/1/90-8/31/15)
2. National Science Foundation, "Concurrent Garage Shop Design and Production using GENI ," $100,000, (09/01/11-08/31/12)
3. Office of Naval Research, Multidisciplinary University Research Initiative (MURI), "Materials and Manufacturing Science and Engineering of Direct Methanol Fuel Cells," with PI:Arumugam Manthiram; with Alan Bard, Christopher Bielawski, David Bourell, Venkat Ganesan, Jeremy Meyers, Kristin Wood, Friedrich Prinz, $5,828,364, (05/01/2007-8/31/13)
4. Office of Naval Research, "Physics and Cyber-enabled Manufacturing Process Control," with Al Mok, $549,107, (2/9/09-8/31/12)
5. Office of Naval Research, Next Generation Manufacturing Processes and Systems, $1,130,000, 5/1/11-8/31/14)
6. Office of Naval Research, Physics and Cyber-enabled Manufacturing Process Control for Direct Digital Manufacture of Metal Parts, $170,975, (9/1/12-9/30/16).
7. National Science Foundation, Cps:Synergy: Cyber Enabled Manufacturing Systems (CeMs) for Small Lot Manufacture, $1,000,000, (10/1/12-9/30/16).
8. Biomedical and Clinical Design, LLC, Anatomically Accurate, Flexible, Electrically Conductive 3D Printed Heart Models, $50,000, (11/26/12-12/31/13)
9. General Dynamics, Laser Additive Manufacturing – Pilot Scale System, $292,385, (2/11/13-5/11/18).
10. BP America, Early Kick Detection Phase 1 – Feasibility Analysis, $396,439, (2/11/13-2/10/18).

CONTINUING EDUCATION:

1. "Modeling of Physical Systems", Arnold Air Force Station, Schneider Services International, Tennessee, March 1987
2. "Modeling of Physical Systems", Texas A & M University, College Station, Texas, August 1987
3. "Solid Freeform Fabrication at the University of Texas, Present, Past, Future", Invited Lecture At Purdue University, Lafayette,
1. IN, USA, September 27-29, 2000
4. "Invited panel member to develop an NSF Initiative for Nanotechnology", ASME 2000 International Mechanical Engineering
2. Congress & Exposition, ASME, Orlando, FL, November 5-6, 2000
5. Engineering Congress & Exposition, ASME, Orlando, FL, November 5-6, 2000
6. "Project Planning for Sandia Research, SMPC Technical Workshop," Sandia, Cleveland, OH, December 12, 2000

7. Big 10+ Mechanical Engineering Department Heads Conference, Chicago, IL, USA, 2001 - present
8. "Nanoscale Facility Working Group, invited participant," National Science Foundation, Tampa, FL, January 10, 2001
9. "ASME Leadership Workshop," ASME, Orlando, FL, January 15-17, 2001
10. "VAR/ESR Controller Update, SMPC Technical Workshop," Sandia, Albuquerque, NM, February 5-7, 2001
11. "Sampling, Sensors & Control for High Temperature Metallurgical Processes", 2001 TMS Annual Meeting And Exhibition,
3. Materials Society, New Orleans, LA, February 10-14, 2001
12. "ESR Technical Workshop," Sandia, Albuquerque, NM, May 1-3, 2001
13. "SMPC Technical Workshop," Sandia, Las Vegas, NV, May 20-23, 2001
14. "SMPC Technical Workshop," Sandia, Los Angeles, CA, June 12-14, 2001
15. SMPC Semiannual Technical Meeting, Sandia, Albuquerque, NM, August 8-9, 2001
16. RPA/SME Technical Forum, ASME, Milwaukee, WI, August 19-21, 2001
17. SBIR Phase I Rapid Prototyping/Solid Freeform Fabrication Panel, Washington D.C., August 30, 2001
18. International Symposium On Liquid Metal Processing And Casting, American Vacuum Society, Santa Fe, NM, USA, September 23 - 26, 2001
19. "VAR/ESR/Hearth Melting/Modeling Workshop," Sandia Liquid Metal Processing Lab, Cleveland, OH, USA, December 4 - 5, 2001
20. SMPC Semiannual Meeting, Sandia Liquid Metal Processing Lab, Albuquerque, NM, USA, 2002 - present
21. "SMPC Project Workshop," Sandia Liquid Metal Processing Lab, Philadelphia, PA, USA, July 2 - 3, 2002
22. ALVAC, American Vacuum Society, Monroe, NC, USA, August 19 - 22, 2002
23. "Frontiers in Product Design and Manufacturing", Schlumberger ME Eureka Seminars 2002, Schlumberger, Paris, France,
4. September 28 - October 6, 2002
24. "NSF Grantees Meeting and Workshop: Ultra-High Capacity Optical Communications and Networking: Challenges in Broadband Optical Access, Materials Processing, and Manufacturing," NSF CTS, DMII And ECS, Arlington, VA, USA, October 20-21, 2002
25. "NEI - Universities, Industry and Government: Partners for the Future of Nuclear Education and Technology", Universities, Industry And Government: Partners For The Future Of Nuclear Education And Technology, NEI, Albany, NY, USA, October 27-28, 2002
26. "World Technology Evaluation Center, Panel of Experts," NSF, WTEC, Washington, DC, US, December 1 - 2, 2002
27. "Semiannual Specialty Metals Processing Consortium Workshop," Sandia National Laboratories, Albuquerque, NM, US, December 10-11, 2002
28. "2003 NSF Design, Service and Manufacture and Industrial Innovation Grantees and Research Conference", NSF, Birmingham, AL, US, January 6 - 9, 2003

INTEX EX. 1045, Pg. 229
Intex Recreation v. Bestway Inflatables, IPR2023-00489

29. "Panel Review for Manufacturing Machines and Equipment in Solid Freeform Fabrication," National Science Foundation, Birmingham, AL, US, January 6 - 9, 2003
30. "Semiannual Specialty Metals Processing Consortium Workshop," Sandia National Laboratories, Albuquerque, NM, US, February 17 - 19, 2003
31. "World Technology Evaluation Center, Panel of Experts," NSF, WTEC, Washington, DC, US, February 23 - 25, 2003
32. "NSF Invited Panel Member for Committee of Visitors for on-site Review of Division of Design Manufacture and Industrial Innovation Programs," NSF, Washington, DC, US, March 24 - 27, 2003
33. "Rapid Prototyping & Manufacturing 2003 Conference, Invited Industry Panel Member", Society Of Manufacturing Engineers, Chicago, IL, US, May 12 -15, 2003
34. "Semiannual Specialty Metals Processing Consortium Workshop," Sandia National Laboratories, Cleveland, OH, US, June 23 - 26, 2003
35. "World Technology Evaluation Center, Panel of Experts," NSF, WTEC, Washington, DC, US, July 14 - 15, 2003
36. "Semiannual Specialty Metals Processing Consortium Workshop," Sandia National Laboratories, Albuquerque, NM, US, August 19 - 20, 2003
37. "Putting a Face on the Future: Engineering Emerges from the Lab", 2004 NSF Grantees And Research Conference, NSF, Dallas, TX, US, 01/05/2004-01/08/2004
38. "Engineering Ethics and Professional Responsibility," Center For Lifelong Engineering Education - University Of Texas At Austin, Austin, TX, USA, September 2006
39. "NSF/Cyber-Physical Systems Workshop," National Science Foundation/University Of Texas At Austin, Austin, TX, USA, October 2006
40. Technology Commercialization Conference, Office Of Technology Commercialization-Univerity Of Texas At Austin, Austin, TX, USA, October 2006
41. "IC2 Worshop- The Future of Tools for Innovation," IC2 Institute - University Of Texas At Austin, Austin, TX, USA, December 2006
42. "ASME Leadership Training Conference for Board Training," ASME, Houston, TX, USA, March 2007
43. Pan-American Science Institute, National Science Foundation/UT-Austin, Porto Alegre, Brazil, June 2007
44. IMCRC Review, Loughborough University, Loughborough, UK, July 2007
45. International Conference On Rapid Manufacturing, London, UK, July 2007
46. 18th Annual Solid Freeform Fabrication Symposium, University Of Texas At Austin, Austin, TX, USA, August 2007
47. Summer Technical Meeting Of The National Energy Technology Lab, National Energy Technology Lab, Albany, OR, USA, August 2007
48. International Conference On Advanced Research In Virtual And Rapid Prototyping (VRAP), CIRP , Leira, Portugal, September 2007

INTEX EX. 1045, Pg. 230
Intex Recreation v. Bestway Inflatables, IPR2023-00489

49. International Symposium On Liquid Metal Processing And Casting (LMPC 2007), Société Française De Métallurgie Et De Matériaux)., Nancy, France, September 2007
50. "ASME Technical Committees Operating Board," ASME, Atlanta, GA, USA, February 2008
51. ASME Leadership Training Conference For Board Training, ASME, Atlanta, GA, USA, February 2008
52. Global Summit On The Future Of Mechanical Engineering, ASME, Washington, D.C., USA, April 2008
53. "ASME Board of Research and Technology Development," ASME , Palm Desert, CA, USA, June 2008
54. "ASME Congress of Divisions - Technical Committees Operating Board ," ASME, Orlando, FL, USA, June 2008
55. "ASME Systems and Design Operating Board Meeting," ASME , Palm Desert, CA, USA, June 2008
56. ASME Annual Meeting 2008, ASME , Palm Desert, CA, USA, June 2008
57. American Control Conference (ACC) 2008, Seattle, WA, USA, June 2008
58. 19th Annual Solid Freeform Fabrication Symposium, The University Of Texas At Austin, Austin, TX, USA, August 2008
59. International Symposium On Liquid Metal Processing And Casting (LMPC 2008), Société Française De Métallurgie Et De Matériaux), Santa Fe, NM, USA, September 2008
60. ASME Dynamic Systems And Control Conference (DSCC) 2008, ASME , Ann Arbor, MI, USA, October 2008
61. "ASME Congress of Divisions - Technical Committees Operating Board ," ASME, Boston , MA, USA, November 2008
62. ASME International Mechanical Engineering Congress (IMECE) 2008, ASME, Boston , MA, USA, November 2008
63. "ASME Energy Grand Challenge Steering Committee Workshop," ASME , Washington, DC, USA, March 2009
64. "ASME Leadership Training Workshop," ASME , Los Angeles, CA, USA, March 2009
65. "ASME Technical Committees Operating Board," ASME, Los Angeles, CA, USA, March 2009
66. "Roadmap for Additive Manufacturing (RAM) Workshop NSF," NSF, Washington, DC, USA, March 2009
67. ASME Congress Of Divisions, ASME , Los Angeles, CA, USA, March 2009
68. ASME Leadership Training Conference For Board Training, ASME, Los Angeles, CA, USA, March 2009
69. "ASME Emerging Technologies Committee Meeting and Technology Policy Committee," ASME, Washington, DC, USA, May 2009
70. "ASME Systems and Design Operating Board Meeting," ASME , Orlando, FL, USA, June 2009
71. ASEE American Society Of Engineering Education Annual Meeting 2009, ASEE, Austin, TX, USA, June 2009
72. ASME Annual Meeting 2009, ASME , Orlando, FL, USA, June 2009

73. "ASME Systems and Design Operating Board Meeting," ASME , San Diego, CA, USA, August 2009
74. 20th Annual Solid Freeform Fabrication Symposium, The University Of Texas At Austin, Austin, TX, USA, August 2009
75. ASME IDETC 2009, ASME , San Diego, CA, USA, August 2009
76. "ASME Emerging Technologies Committee Workshop ," ASME, Orlando, FL, USA, November 2009
77. "ASME Systems and Design Operating Board," ASME, Orlando, FL, USA, November 2009
78. "ASME Technical Committees Operating Board - Congress of Divisions," ASME, Orlando, FL, USA, November 2009
79. ASME International Mechanical Engineering Congress (IMECE) 2009, ASME , Orlando, TX, USA, November 2009
80. SME The 12th Aerospace Automation Consortium, SME, Seattle, WA, USA, November 2009
81. "ASME Systems and Design Operating Board Meeting," ASME, Cambridge , MA, 2010
82. "Photovoltaic Consortium Workshop," UT Office Of Research, Washington, DC, USA, January 2010
83. "ASME Congress of Divisions and Leadership Training," ASME , Dallas, TX, USA, March 2010
84. "ASME Strategies for Improving Diversity Panel," ASME , Newport Beach, CA, USA, March 2010
85. "ASME Systems and Design Operating Board," ASME, Dallas, TX, USA, March 2010
86. "RGV Manufacturing Initiative Workshop," McAllen, TX, USA, March 2010
87. ASEE Engineering Research Council 2010, ASEE, Arlington, VA, USA, March 2010
88. ASME Education Conference 2010, ASME , Newport Beach, CA, USA, March 2010
89. "University of Texas Technology Summit," Cameron, Houston, TX, USA, April 2010
90. Engineering Public Policy Symposium 2010, ASME, Washington, DC, USA, April 2010
91. "ASEE Mechanical Engineering Department Heads Executive Committee," ASEE, Louisville , KY, USA, June 2010
92. "ASME Board of Research and Technology Development," ASME, Pittsburgh, PA, USA, June 2010
93. "ASME Emerging Technologies Committee Workshop," ASME, Pittsburgh, PA, USA, June 2010
94. ASEE Annual Conference 2010, ASEE, Louisville , KY, USA, June 2010
95. ASME Annual Meeting 2010, ASME , Pittsburgh, PA, USA, June 2010
96. "ASME Systems and Design Operating Board," ASME, Monreal, Canada, August 2010
97. 21st Annual Solid Freeform Fabrication Symposium, The University Of Texas At Austin, Austin, TX, USA, August 2010

98. ASME Dynamic Systems And Control (DSCC) Conference, ASME, Cambridge , MA, USA, September 2010
99. "Systems and Design Group Operating Board (SDGOB) Meeting," ASME, Cambridge, MA, USA, September 2010
100. ASME Dynamic Systems And Control (DSCC) Conference, ASME, Cambridge, MA, USA, September 2010
101. "SMPC Modeling Workshop," SMPC, Austin, TX, USA, October 2010
102. "Technical Communities Operating Board (TCOB) Meeting," ASME, Dallas, TX, USA, March 2011
103. "US Ignite! Gigabit Application Workshop," NSF, Arlington, VA, USA, April 2011
104. Big 10+ Mechanical Engineering Department Heads Conference, ASME, Chicago, IL, USA, April 2011
105. "ASME Board of Research and Technology Development (BRTD) Meeting," ASME, Dallas, TX, USA, June 2011
106. ASME Annual Meeting 2011, ASME, Dallas, TX, USA, June 2011
107. 22nd Annual Solid Freeform Fabrication Symposium, The University Of Texas At Austin, Austin, TX, USA, August 2011
108. "Technical DSCD Meetings", ASME Dynamic Systems And Control Conference (DSCC) 2011, ASME, Arlington, VA, USA, October 2011
109. "Chaired the Manufacturing Innovations Workshop", ASME International Mechanical Engineering Congress (IMECE) 2011, ASME, Denver, CO, USA, November 2011
110. "Mechanical Engineering Department Chairs' Executive Committee Meeting and Workshop ", ASME International Mechanical Engineering Congress (IMECE) 2011, ASME, Denver, CO, USA, November 2011
111. "Technical Communities Operating Board Meeting, Systems and Designs Technical Meeting, Board of Research and Technology Development Meeting", ASME International Mechanical Engineering Congress (IMECE) 2011, ASME, Denver, CO, USA, November 2011

ADDITIONAL TEACHING ACTIVITIES

1. Coordinated New Course ME W379M, "Machine Tool Operations for Engineers", University of Texas at Austin, 2010-11.
2. Taught "Network Thermodynamics," University of Texas at Austin, in addition to full time teaching load, Spring 1988
3. Developed new Graduate Course ME 397, "Modeling of Complex Physical Systems" with Professor Raul Longoria,Spring 1995
4. Developed a new Freshman Seminar Course on the "Engineered World: Systems Modeling." Course material for non-ME students focused on the book Longitude, along with the video. The class built projects to understand the basics of engineering, Spring 2008

PH.D. SUPERVISIONS COMPLETED

1. Pottebaum, Kenneth L., Mechanical Engineering, 1982
2. Khonsari, M. M., Mechanical Engineering, 1983

INTEX EX. 1045, Pg. 233
Intex Recreation v. Bestway Inflatables, IPR2023-00489

3. Wang, S. Y., Mechanical Engineering, 1983
4. Hamilton, P. S., Mechanical Engineering, 1984 Co-supervised with R. Barr
5. Chaney, M. J., Mechanical Engineering, 1988
6. Deckard, C. R., Mechanical Engineering, 1988
7. Longoria, Raul G., Mechanical Engineering, 1989
8. Da Silva, R. E., Mechanical Engineering, 1991
9. Lipp, S. C., Mechanical Engineering, 1991
10. Sun, M-S. M., Mechanical Engineering, 1991
11. Wu, Y. J., Mechanical Engineering, 1991
12. Melvin, L. S., Mechanical Engineering, 1994
13. Chen, KenWei, Mechanical Engineering, 1998 Co-supervised with R. H. Crawford
14. Das, Suman, Mechanical Engineering, 1999
15. Hongyun Wang, Fall 1999 Co-supervised with Dave Bourell
16. David Thompson, Summer 2000 Co-supervised with Rich Crawford
17. Seok-Min Park, Mechanical Engineering, Fall 2000 "Advanced Data Exchange for Solid Freeform Fabrication" Co-supervised with R. H. Crawford
18. Jepson, Larry Ray, Mechanical Engineering, 1995 – 2002 "Multiple Material Selective Laser Sintering"
19. Carey Wayne King, Mechanical Engineering, Spring 2004 "Design Synthesis of Multistable Equilibrium Systems" Co-supervised with Matthew Campbell
20. Rodrigo Ruizpalacios, Mechanical Engineering, Fall 2004 "Laser Direct-Write of Optical Components Prepared Using the Sol-Gel Process"
21. Seokyoung Ahn, Mechanical Engineering, Spring 2005 "Modeling, Estimation, and Control of Electroslag Remelting Process"
22. Timothy J. Silverman, Mechanical Engineering, Fall 2010
23. Dongwoo Kim, Mechanical Engineering, June 2009 - Summer 2012 "Prediction of Microstructure Evolution of Heat-Affected Zone in Gas Metal Arc Welding of Steels" Co-supervised with Eric Taleff
24. Vikram Devaraj, Mechanical Engineering, Summer 2012 "Modeling, Design, Development, and Control of a Pilot-Scale Continuous Coating Line for Proton Exchange Membrane Fuel Cell Electrode Assembly"
25. Andy Zimbroff, Mechanical Engineering, Summer 2013, “Occlusion of the Left Atrial Appendage Using Catheter-Delivered Hydrogels for Prevention of Thromboembolic Phenomena”
26. Felipe Lopez, Mechanical Engineering, December 2014, “Model-based estimation of a solidification process”

M.S. SUPERVISIONS COMPLETED:

1. Meyers, R. Scott, Mechanical Engineering, 1981
2. Armour, David L., Mechanical Engineering, 1982
3. Pavelko, Anthony J., Mechanical Engineering, 1982
4. Berry, Don T., Mechanical Engineering, 1983
5. Cutherell, D., Mechanical Engineering, 1985
6. Sobhi, Ali, Mechanical Engineering, 1985
7. Deckard, C., Mechanical Engineering, 1986

INTEX EX. 1045, Pg. 234
Intex Recreation v. Bestway Inflatables, IPR2023-00489

8. Nereson, K., Mechanical Engineering, 1986, Co-supervised with G. Masada
9. Ramage, J., Mechanical Engineering, 1986
10. Trelford, J.A., Mechanical Engineering, 1986, Co-supervised with G. Masada
11. Tso, D., Mechanical Engineering, 1986, Co-supervised with G. Masada
12. Yang, B., Mechanical Engineering, 1986
13. Morrow, J.D., Mechanical Engineering, 1987
14. Panayiotis, S.S., Mechanical Engineering, 1988
15. Walshak, D.B., Mechanical Engineering, 1988
16. Chang, W.R., Mechanical Engineering, 1989
17. Forderhase, P.F., Mechanical Engineering, 1989
18. Michael, D.A., Mechanical Engineering, 1989
19. Jackson, J., Mechanical Engineering, 1990
20. Melvin, Lawrence S., Mechanical Engineering, 1991
21. Wu, Yong Qui, Mechanical Engineering, 1992
22. Devereux, Daniel, Mechanical Engineering, 1993
23. Jog, Anand, Mechanical Engineering, 1993
24. Tobin, James , Mechanical Engineering, 1993
25. Moore, Nathan, Mechanical Engineering, 1994
26. Ana Maria Castano, Mechanical Engineering, 1996
27. Neal D. Lipman, Mechanical Engineering, 1996
28. Hysinger, Christopher, Mechanical Engineering, 1997
29. Park, Seok-min, Mechanical Engineering, 1997
30. Savoie, Troy B., Mechanical Engineering, 1997
31. Danyo, Gregory, Mechanical Engineering, 1998
32. Genovese, Stacey, Mechanical Engineering, 1998
33. Wang, Hongyun, Mechanical Engineering, 1998, Co-supervised with Dave Bourell
34. Engel, Brett, Mechanical Engineering, 1999, Co-supervised with Dave Bourell
35. Perez, Julie, Mechanical Engineering, 1999, Co-supervised with Kris Wood
36. Venkataramani, Ravi, Mechanical Engineering, 1999
37. Vinay Sriram, Fall 2003 "Parametric Modeling of Sol-gel Based Multi Layer Thin Films for Optical Waveguides", Co-supervised with Kristin L. Wood
38. Dennis J. Tweten, Spring 2004 "Thermal and Electrical Model of the Electrode of the Electroslag Remelting Process"
39. Shweta Bhandari, Spring 2004"Binder Optimization for Manufacturing of Silicon Carbide Preforms", Co-supervised with David L. Bourell
40. Gerard Adriel Johnson, Mechanical Engineering, Spring 2007 "Modeling Of A Silicon/Silicon Carbide Pressureless Infiltration Process"
41. Ahmad El-Zataari, Mechanical Engineering, Fall 2007 - Spring 2009 "Evaluation of Bond Graph Tools, A Comparative Study"
42. Patrick J. Casey, Mechanical Engineering, Fall 2007 - Summer 2009 "Real-Time Estimation of MIG Welding Weld Bead Width using an IR Camera"
43. Vikram Devaraj, Mechanical Engineering, Fall 2009 - Fall 2009 "Compression/Injection Molding of Bipolar Plates for Proton Exchange Membrane Fuel Cells "
44. John Cameron Booth, Mechanical Engineering, Fall 2007 - Fall 2010

INTEX EX. 1045, Pg. 235
Intex Recreation v. Bestway Inflatables, IPR2023-00489

45. John Cameron Boothe, Mechanical Engineering, Fall 2007 - Fall 2010
46. Peter Doblar, Mechanical Engineering, Fall 2009 - Spring 2011
47. Luis Filipe Lopez, Mechanical Engineering, Fall 2009 - Spring 2012 "Implementation of a High-Fidelity Axisymmetric Model in a Vacuum Arc Melting Process"
48. Walker Wroe, Mechanical Engineering, August 2015, "Improvements and effects of Thermal History on Mechanical Properties for Polymer Selective Laser Sintering (SLS)"

PH.D. SUPERVISIONS IN PROGRESS:

1. Marcel Ojinnaka, Spring 2013 – present
2. Cameron Booth, Fall 2010 – present
3. Debbie Hagen. Spring 2015 – present
4. Tim Phillips, Fall 2014 – present
5. Samantha Taylor, Spring 2015 – present

M.S. SUPERVISIONS IN PROGRESS:

1. Jimmy Yi, Spring 2016 – present

OTHER STUDENT RESEARCH SUPERVISION:

1. Munkvold, G. D. , Active committee member and provided substantial funding. Chemical Engineering student supervised by T.Edgar. (1990)
2. Bunnell, D.L., Active committee member and provided substantial funding. Student supervised by D. Bourell. (1996)
3. Xue, Sumin, Active committee member and provided substantial funding. Chemical Engineering student supervised by J. Barlow. (1996)
4. Lee, Goonhee, Active committee member and provided substantial funding. Chemical Engineering student supervised by J. Barlow. (1998)
5. Harlan, Nicole, Active committee member and provided substantial funding. Student supervised by D. Bourell. (1999)
6. Wohlert, Martin, Active committee member and provided substantial funding. Student supervised by D. Bourell. (Summer 2000)
7. Brisa Ponce, undergraduate research assistant in SFF lab (Fall 2001)
8. Eric Schafer, Undergraduate Research Assistant in SFF Lab (Fall 2001)
9. Andres Sanchez, Student Assistant (Summer 2002)
10. Bryan L. Blackmur, Undergraduate - LANL (2005)
11. T. Nga, Undergraduate Biomedical, 2013

INTEX EX. 1045, Pg. 236
Intex Recreation v. Bestway Inflatables, IPR2023-00489