Woodhead Publishing Series in Textiles: Number 110

Joining textiles

Principles and applications

Edited by

I. Jones and G. K. Stylios

The Textile Institute

WP

WOODHEAD PUBLISHING

Oxford Cambridge Philadelphia New Delhi

© Woodhead Publishing Limited, 2013

INTEX EX. 1049, Pg. 1
Intex Recreation v. Bestway Inflatables, IPR2023-00489

Published by Woodhead Publishing Limited in association with The Textile Institute
Woodhead Publishing Limited, 80 High Street, Sawston, Cambridge CB22 3HJ, UK
www.woodheadpublishing.com
www.woodheadpublishingonline.com

Woodhead Publishing, 1518 Walnut Street, Suite 1100, Philadelphia,
PA 19102-3406, USA

Woodhead Publishing India Private Limited, G-2, Vardaan House, 7/28 Ansari Road,
Daryaganj, New Delhi – 110002, India
www.woodheadpublishingindia.com

First published 2013, Woodhead Publishing Limited
© Woodhead Publishing Limited, 2013. Note: the publishers have made every effort to ensure that permission for copyright material has been obtained by authors wishing to use such material. The authors and publishers will be glad to hear from any copyright holder it has not been possible to contact.
The authors have asserted their moral rights.

This book contains information obtained from authentic and highly regarded sources. Reprinted material is quoted with permission, and sources are indicated. Reasonable efforts have been made to publish reliable data and information, but the authors and the publishers cannot assume responsibility for the validity of all materials. Neither the authors nor the publishers, nor anyone else associated with this publication, shall be liable for any loss, damage or liability directly or indirectly caused or alleged to be caused by this book.

Neither this book nor any part may be reproduced or transmitted in any form or by any means, electronic or mechanical, including photocopying, microfilming and recording, or by any information storage or retrieval system, without permission in writing from Woodhead Publishing Limited.

The consent of Woodhead Publishing Limited does not extend to copying for general distribution, for promotion, for creating new works, or for resale. Specific permission must be obtained in writing from Woodhead Publishing Limited for such copying.

Trademark notice: Product or corporate names may be trademarks or registered trademarks, and are used only for identification and explanation, without intent to infringe.

British Library Cataloguing in Publication Data
A catalogue record for this book is available from the British Library.

Library of Congress Control Number: 2012953127

ISBN 978-1-84569-627-6 (print)
ISBN 978-0-85709-396-7 (online)
ISSN 2042-0803 Woodhead Publishing Series in Textiles (print)
ISSN 2042-0811 Woodhead Publishing Series in Textiles (online)

The publishers' policy is to use permanent paper from mills that operate a sustainable forestry policy, and which has been manufactured from pulp which is processed using acid-free and elemental chlorine-free practices. Furthermore, the publishers ensure that the text paper and cover board used have met acceptable environmental accreditation standards.

Typeset by Replika Press Pvt Ltd, India
Printed and bound in the UK by the MPG Books Group

© Woodhead Publishing Limited, 2013

INTEX EX. 1049, Pg. 2
Intex Recreation v. Bestway Inflatables, IPR2023-00489

12
Ultrasonic and dielectric welding of textiles

I. JONES, TWI Ltd, UK

DOI: 10.1533/9780857093967.3.374

Abstract: This chapter reviews two major welding techniques for textiles: ultrasonic welding and dielectric welding (also known as high frequency (HF) or radio frequency (RF) welding). For each technique, the chapter discusses the key principles, their advantages and disadvantages, the equipment used, factors affecting quality and applications.

Key words: textile, fabrics, welding, bonding, ultrasonic plunge, wheel, roller, continuous, dielectric, RF, HF.

12.1 Ultrasonic welding: an introduction

Ultrasonic welding is a process that uses mechanical vibrations to soften or melt a thermoplastic material at the joint line. The fabrics to be joined are held together under pressure and subjected to ultrasonic vibrations, usually at a frequency of 20–40 kHz. The mechanical energy is converted to thermal energy due to intermolecular and surface friction. The mechanisms responsible for generating heat at the joint line are not fully understood. However, Benatar and Gutowski (1989) have summarised the key steps as:

- the mechanics and vibration of the parts
- the viscoelastic heating of the thermoplastics
- heat transfer
- flow and wetting
- intermolecular diffusion.

Studies suggest that the ultrasonic bonding mechanism is a physical process and not a chemical process, i.e. when the process is carried out within the normal operating range, no new chemical groups or bonds are formed. Other studies of the mechanisms of ultrasonic welding include Tolunay (1982), Shi and Little (2000) and Mao and Goswami (2001). The ultrasonic process can be used for seaming, cutting, slitting, trimming, tacking, embossing, quilting, or simultaneous cutting and sealing. The process is fast (200 m/min has been demonstrated) and energy efficient. The equipment may be bench or table mounted, or integrated into an automated line.

The main advantages of using ultrasonic welding over other welding processes are:

© Woodhead Publishing Limited, 2013

INTEX EX. 1049, Pg. 3
Intex Recreation v. Bestway Inflatables, IPR2023-00489

- short weld times (typically less than one second) – suits high volume production of discreet parts
- high continuous welding speeds (>30 m/min possible)
- simple technique – straightforward to put into production
- consistent performance (once weld parameters are optimised) – a reliable process; precise automated assembly is possible using CAM technology
- clean process – can be used in a clean-room environment
- minimal thermal damage to fibres: heat energy is generated within the fibres using ultrasonic energy at the joint site; this heat energy is not conducted through the fibres as is the case in thermal bonding
- relatively low cost (consumables such as needles, solvents, adhesives, etc., are not required)
- low energy consumption
- an impermeable seam can be achieved (essential for certain technical textile applications such as clothing for contaminated environments)
- recycling is relatively easy since other yarns have not been used in seam formation
- a fusible film can be melted at the joint interface providing a seal without affecting the fabric layers
- edges are sealed and there are no stitch holes.

The main disadvantages of ultrasonic welding are:

- all aspects of the process must be considered carefully together to ensure successful welding
- particles of flash are sometimes generated
- vibrations may affect sensitive components
- when plunge welding is used (i.e. not continuous), the maximum size of component is limited to 250 mm; this size is reduced when using materials that require high energy for welding, for example, semi-crystalline materials.

12.2 Equipment for ultrasonic welding

A typical ultrasonic welding machine for plunge welding (Fig. 12.1) consists of five main components (Froment, 1999):

- ultrasonic generator
- microprocessor control system, and user interface
- machine stand, consisting of the base-plate, pneumatic system and welding press
- welding stack, which incorporates the ultrasonic transducer, booster and welding horn
- component holding fixture.

© Woodhead Publishing Limited, 2013

INTEX EX. 1049, Pg. 4
Intex Recreation v. Bestway Inflatables, IPR2023-00489

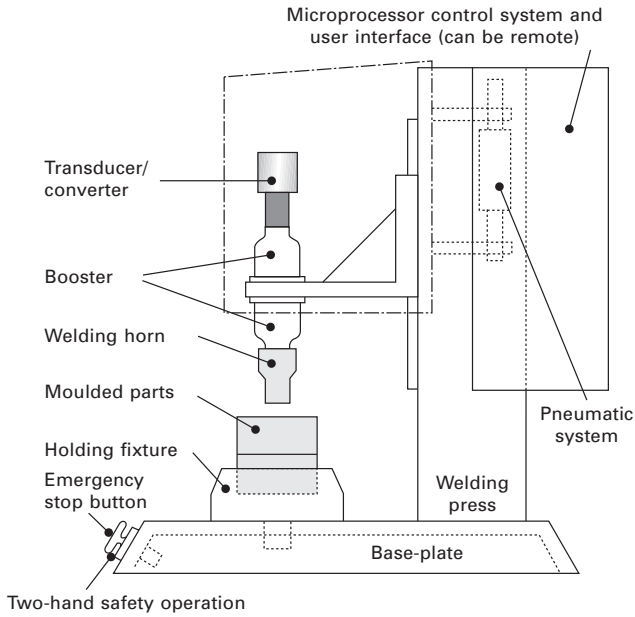

12.1 Schematic of a typical ultrasonic plunge welding machine.

Figure 12.1 shows a breakdown of the individual parts of an ultrasonic welding machine. A generator converts electrical power from the single-phase mains to the correct frequency and voltage for the transducer to convert into mechanical vibrations. The generator thus provides the ultrasonic energy to the welding stack. The welding stack is a tuned resonator, rather like a musical instrument tuning fork. In order to function, the resonant frequency of the tuned welding stack must closely match the frequency of the electrical signal from the generator (within 30 Hz). The microprocessor unit controls the welding cycle and feeds back key welding information to the user, via the user interface. The user interface also allows the operator to enter the required welding parameters.

The machine stand is designed to hold the welding stack and apply the force necessary for welding. It consists of a base-plate, to hold the tooling jig, and a pneumatic cylinder to apply the force. The machine will have a pressure gauge and regulator for adjustment of the welding force. It should be noted that a particular gauge pressure set on one piece of ultrasonic welding equipment will not necessarily provide the same welding force on another. Welding force should be calibrated using a load cell so that direct comparison of welding forces can be made from equipment to equipment. There is also a flow control valve to allow adjustment of the speed at which

© Woodhead Publishing Limited, 2013

INTEX EX. 1049, Pg. 5
Intex Recreation v. Bestway Inflatables, IPR2023-00489

the welding head approaches the component being welded. Some equipment manufacturers have introduced an electromagnetic force application system in place of the traditional pneumatic cylinder. This gives better control of the approach rate and can be beneficial when welding small or delicate components.

Finally, the welding stack is the part of the machine that provides the ultrasonic mechanical vibrations to effect the welding operation. This is generally a three-part unit consisting of:

- transducer
- booster
- welding horn.

These are mounted on the welding press at the centre-point of the booster section.

The transducer, also known as the converter, is the key component of the ultrasonic welding system. The transducer converts the electrical energy from the generator to the mechanical vibrations used for the welding process. The booster section of the welding stack serves two purposes. Its primary purpose is to amplify the mechanical vibrations produced at the tip of the transducer. Its secondary purpose is to provide a place where it can be mounted on the welding press and a point where the load can be transferred from the press to the components being welded. The booster expands and contracts as the transducer applies the ultrasonic energy.

The welding horn (or 'sonotrode' as it is also known) is the element of the welding stack which supplies energy to the component being welded. The horn is designed to resonate at the frequency of the ultrasonic system. When the horn vibrates, it stretches and shrinks in length by a small amount; this motion is referred to as the amplitude of the horn (Devine 1998). Amplitude is typically between 30 and 120 μm. Design of the welding horn is critical to successful welding. The welding horn, like the booster element, is a tuned device which, in the majority of applications, also provides mechanical gain. The length of the welding horn must be a minimum of one half of a wavelength of ultrasound in the material from which it is manufactured, but can also be multiples of one half wavelength. This ensures that there will be sufficient amplitude at the end of the welding horn to effect welding. The horn must be made from a material with good acoustic and mechanical properties. These properties are usually found in low-density materials such as aluminium or titanium. If wear is likely to be a problem, aluminium can be chrome plated and titanium may be carbide coated.

There are three basic designs of welding horn: exponential, step and catenoidal. The catenoidal welding horn is used in the majority of applications. This design, which combines a gentle curve with a modest step at the node, gives more gain than the exponential design but without the stress

© Woodhead Publishing Limited, 2013

INTEX EX. 1049, Pg. 6
Intex Recreation v. Bestway Inflatables, IPR2023-00489

concentration associated with the stepped horn. The tip of the welding horn delivers the ultrasonic energy to the component being welded. In the majority of applications, the tip of the horn is profiled to provide a pattern on the fabric and to focus the energy delivered, although some applications use a simple flat-ended welding horn. The pattern ensures that maximum energy transfer between the horn and the component is achieved. A variation on the process uses a two-part horn with a gap between the tips of 0.15–0.55 mm, allowing independent vibration of the two (Tsujino *et al.*, 1986). The result is a weld of a similar size to the gap between the horn parts, which is effective for micro-welding of thin materials over a limited area of a plastic part.

In the case of textiles, there are two main welding techniques:

- plunge mode welding
- rotary/continuous welding using a wheel or a wide drum and static horn.

The general principles of the continuous welding equipment are very similar to the plunge welding equipment. In continuous welding the ultrasonic vibrating horn can be wheel shaped, and rotates during processing. The anvil is a rotating wheel or drum, rather than being static as in plunge welding.

In plunge mode welding, the fabrics are held under pressure onto an anvil by a vibrating horn, the process typically taking around one second to complete. Either the anvil or the horn may be patterned.

In rotary/continuous mode, the fabric is fed between two wheels, one of which is ultrasonically vibrated while the other acts as a rolling anvil (Figs 12.2 and 12.3), or between a fixed vibrating horn and a rotating drum anvil (Fig. 12.4) to provide a continuous welding process. The wheels are normally patterned to provide local intensification of the ultrasonic energy and to provide a patterned seam. They may also incorporate a cutting edge to enable simultaneous 'cut and seal' processing. Seaming rates of at least 30 m/min are possible. The drum type machines can be extended to a full fabric width (up to 3 m) to provide continuous quilting (Fig. 12.5) at rates up to 10 times faster than a stitch quilting machine and offering a different variety of quilting patterns defined by the patterns on the drum. These machines can have tens of horns, positioned to provide a pattern over the full width of the fabric.

A horn with a sharp edge may be used for ultrasonic slitting. This is a generally a continuous process with either the horn or the fabric moving. Ultrasonic slitting produces an edge that is smooth, durable and clean, with no discoloration of the fabric. Ultrasonic edge sealing prevents unravelling of knitted or woven materials. The sealed edge is tapered without a bead that would add unnecessary bulk.

© Woodhead Publishing Limited, 2013

INTEX EX. 1049, Pg. 7
Intex Recreation v. Bestway Inflatables, IPR2023-00489

12.2 Continuous ultrasonic wheel welding and cutting machine (note this machine also includes laser welding).

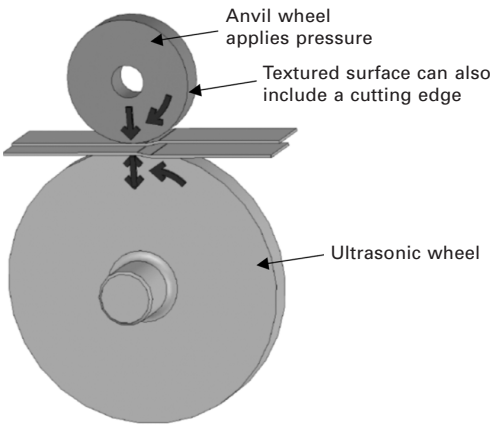

12.3 Continuous ultrasonic wheel welding.

12.3 Factors affecting the quality of ultrasonic welding

To achieve a good ultrasonically welded joint, designers are advised to consider the whole process carefully. The following sequence serves as a guide to successful ultrasonic welding:

- Select the right material or combination of materials and interlayer films.

© Woodhead Publishing Limited, 2013

12.4 Continuous ultrasonic drum welding machine.

12.5 Wide format (up to 3 m) ultrasonic drum welding machine used for quilting.

- Select the relevant seam design for the material being welded.
- Select the most suitable type of equipment, based on the size, shape and contents of the component being welded. This includes the correct horn design, booster type and support fixture.
- Evaluate designs with prototype components. Selection of weld parameters should take place at this stage. Welding parameters should be set in relation to the desired performance of the product, for example, to

© Woodhead Publishing Limited, 2013

INTEX EX. 1049, Pg. 9
Intex Recreation v. Bestway Inflatables, IPR2023-00489

maximise failure strength. Use of designed experiments to set the welding parameters is recommended.
- Make any necessary changes to the design and then put the components into production.

Faults occurring in production due to poorly designed components can prove costly and time-consuming to rectify. It is wise to be aware of typical welding faults before designing a product. This helps designers to avoid faults.

12.3.1 Materials

Both modes of welding (plunge and continuous) can be used to join two virgin fabrics without coatings or interlayers. In this case the fabrics will be melted through their full thickness. Alternatively, the ultrasonic energy can be used to melt either a coating or a hot melt adhesive film interlayer. The film can be pre-placed or delivered between the fabrics from a roll during the welding process. Only the film or the coating is melted and infiltrates the fibres in the fabric, creating a strong joint that remains flexible and often retaining elasticity if the film is of a suitable type.

The ability to ultrasonically weld textiles depends on their thermoplastic content. As a minimum, the material must have a thermoplastic content of 65%. The weldability of the main fabric groups is listed in Table 12.1. As a general rule, natural fabrics do not melt and require a hot melt adhesive film to be placed between them before welding. This will melt into the natural fibres creating a strong joint. Synthetic thermoplastic materials can be welded without an additional film interlayer, although as with most other welding methods, a low melting point film can be used that will melt preferentially to the fabrics and provide a joint that leaves the original fabrics unaffected by the process. This is especially useful for elastic fabrics and laminated fabrics, where a seal can be achieved without damaging the barrier layer in the laminate.

The fabric structure, thickness and base material affect the performance of the ultrasonic welding process. Factors affecting weldability include the following (Branson 2011):

- Wovens: Yarn density, thermoplastic content, tightness of weave and uniformity of material thickness. Weld strength may vary according to the orientation of yarns or filaments.
- Non-wovens: Uniformity of material thickness and thermoplastic content. Random orientation of fibres gives non-wovens excellent strength.
- Knits: Style of knit, thermoplastic content and elasticity of construction.
- Coated materials: Coating material, thickness and substrate characteristics.

© Woodhead Publishing Limited, 2013

INTEX EX. 1049, Pg. 10
Intex Recreation v. Bestway Inflatables, IPR2023-00489

Table 12.1 Fabrics that may be joined using ultrasonic welding

Fabric group	Sub-group	Suitability of ultrasonic welding			Comments
		Yes	Some cases	No	
Natural					
Cotton			x		Requires adhesive film
Cellulose			x		Requires adhesive film
Wool			x		Requires adhesive film
Silk			x		Requires adhesive film
Glass			x		Requires adhesive film
Carbon fibre			x		Requires adhesive film
Synthetic					
Acrylic	Woven, knitted		x		Can be cut, but bonding requires adhesive
Cellulose	Acetate		x		Requires adhesive film
	Viscose		x		Requires adhesive film
Nylon	Woven, knitted, fleece, non-woven	x			
Polyester	Woven, knitted, fleece, non-woven	x			
Polypropylene	Woven, knitted, fleece, non-woven	x			
Polyethylene	Woven, knitted, fleece, non-woven	x			
Coated	PU, PC	x			
	PVC		x		Welding inhibited by plasticisers
	PTFE		x		Spray coats can be welded, thick coats need a film interlayer
Laminated			x		Preferably with a film interlayer
Elastic fabrics			x		With an elastic film interlayer
Natural to synthetic		x			Synthetic melts into natural fibres or use film layer

Notes: For best results the mixed natural/synthetic fabric to be welded should contain 50%, and preferably over 65%, thermoplastic synthetic fibres. Foam materials weld better in plunge mode than continuous, so that they can be held under pressure during cooling.

© Woodhead Publishing Limited, 2013

- Laminates: Thermoplastic type at weld interface and laminate structure configuration.

The type of thermoplastic is also important in defining welding performance. Amorphous and semi-crystalline thermoplastic materials will behave differently when ultrasonically welded as bulk plastic material. However, the characteristics of fabrics usually ensure that all the processing is near-field, i.e. the ultrasonic horn is less than 6 mm from the joint interface. The differences between amorphous and semi-crystalline polymer processing therefore become less distinct. Often, it is found that soft, elastomeric materials require more energy for ultrasonic welding than more rigid materials because the ultrasonic vibrations are damped by the soft material.

Semi-crystalline materials have a well-defined melting point. High heat energy is required to break down the crystalline structure before melting can occur. The molecular chains are then mobile and inter-diffusion can begin to occur and form the weld. Generally, semi-crystalline plastics require more energy to weld ultrasonically than amorphous plastics. Solidification of the material also occurs more rapidly compared with amorphous plastics. Higher horn tip amplitudes are required to ultrasonically weld semi-crystalline materials. This ensures that the required high heat energy is achieved. In contrast, amorphous materials do not have a defined melting point. When the materials are heated, they gradually soften as they pass through the glass transition temperature of the material, and move into a rubbery state. These materials require less energy for welding than the semi-crystalline materials and hence lower horn tip amplitudes can be used.

There are other properties of thermoplastic materials which govern their ability to be ultrasonically welded successfully, including the presence of additives such as flame retardants. Typical flame retardant additives such as boron, antimony, halogens, nitrogen and phosphorous reduce the strength of the welded component and often require higher ultrasonic amplitude to make the weld. Some polymer materials, for example nylon, have a tendency to absorb moisture from the atmosphere. In the case of nylons, moisture absorption can be as high as 4% of the material weight when fully saturated and this has a detrimental effect on welding. Moisture tends to boil off during the rapid ultrasonic heating process, leaving voids at the weld interface. This is a particular problem when the joint is required to produce a hermetic seal. If materials have been stored in a humid atmosphere, they should be dried thoroughly. Components which are likely to experience problems with moisture may need to be stored in polyethylene bags, along with a suitable moisture absorption medium such as silica gel. Yarn density, tightness of weave, elasticity of material and style of knit are other factors which can influence textile weldability.

An important issue when considering weldability is the compatibility of

© Woodhead Publishing Limited, 2013

INTEX EX. 1049, Pg. 12
Intex Recreation v. Bestway Inflatables, IPR2023-00489

different materials. The general rule is that very few materials are considered compatible for welding. A further practical consideration is the thickness of material through which the ultrasonic energy needs to travel between the welding horn and the joint. As a minimum, the material must have uniform thickness.

12.3.2 Welding parameters

Once the welding parameters have been optimised, ultrasonic welding is a consistent and reliable process. Key welding parameters include:

- amplitude
- power
- welding mode (including hold time in plunge welding)
- pressure and wheel or anvil gap (continuous welding).

These must all be correctly set to achieve the required joint quality.

Amplitude

Amplitude selection depends on the type of material being welded, amorphous or semi-crystalline. In general, semi-crystalline materials require more energy and, therefore, more horn tip amplitude than amorphous materials. The gain in the horn and in the booster are altered to set the amplitude. Depending on the material being welded, the amplitude may be set at 20–100 μm.

Power

Typically, a product produced in an easy-to-weld material will require a machine with a maximum power output of 800 W, though some machines can deliver over 2 kW per horn, and may have multiple horns. During the welding cycle, the machine may never draw the maximum power available. Most ultrasonic welding equipment has the ability to limit the amount of power consumed during the welding cycle.

Welding mode

Time, energy or distance are the three key variables in the welding mode for plunge welding. The ultrasonic welding cycle consists of two phases: the 'ultrasonics on' period and the hold time. Throughout the welding cycle, the welding horn remains in contact with the components being welded and an axial force is applied. The period when the ultrasonic energy is applied can be controlled by a time setting (typically 0.1–0.3 s for small parts), energy applied or the movement (displacement) measured at the joint. During the

© Woodhead Publishing Limited, 2013

INTEX EX. 1049, Pg. 13
Intex Recreation v. Bestway Inflatables, IPR2023-00489

hold time, the parts are supported under pressure for typically 0.3–0.5 s to allow the joint to cool.

Pressure

The force applied to the joint must be enough to hold the parts together but not overdampen the vibrations. For parts with less than 20 mm weld length, typically forces less than 200 N are required.

Wheel or anvil gap

For continuous welding, the relation between the fabric thickness and the gap at the wheel or anvil is important in controlling the weld properties. Typically a gap of 0.1 mm may be set for thin materials, but this may be increased for thicker materials to limit the thinning at the weld zone.

Shi and Little (2000) have explored the importance of these parameters in welding seams to incorporate optical fibres into garments. Their research suggested an increase of weld strength with an increase in pressure and time until a point at which strength peaked and then began to drop due to polymer orientation. Weld strength also increased when amplitude was increased from 40 to 60 μm.

12.4 Applications of ultrasonic welding in textiles

The ultrasonic welding process is typically used where short weld times and a hermetic seal are required. The process can be easily automated. It is therefore well placed to replace the two-stage stitch and sealing process with a cheaper one-stage process for sealed seams. The potential for automation is particularly important for garment making where there is considerable pressure to speed up production whilst still allowing the flexibility to provide for design and sizing variations. Specific applications include hook and loop straps (Branson, 2011) and belt loops. The ability of ultrasonic welding to provide a hermetic seal also means it is particularly suitable for the manufacture of medical textiles. Ultrasonic welding is used, for example, to cut and weld non-woven materials for face masks, filters and clean room capes. In the plunge mode, the ultrasonic horn operates perpendicularly to the material, and fuses the layers together in the pattern of the stationary anvil. This technique can be used to simultaneously cut and seal the edges of material. Typical applications using this mode include bra straps and buckles, buttonholes, collar stays, darts, strapping, embossing, grommets, belt loops, filter media (woven and non-woven), zipper stops, and vertical blinds.

In the continuous mode, typical applications include protective garments,

© Woodhead Publishing Limited, 2013

INTEX EX. 1049, Pg. 14
Intex Recreation v. Bestway Inflatables, IPR2023-00489

disposable hospital gowns, shoe covers, face masks, infants' nursery garments, nappies, filters, bags, curtains, sails, and web splicing. Sealed edges and seams with no stitch holes prevent penetration of chemicals, liquids, blood-borne pathogens, or particulates. The rotating drum operation is used for quilting, medical disposables and some bag materials.

Ghosh and Reddy (2009) studied the effect of ultrasonic welding on polyethylene terephthalate (PET) and Spectra fabrics. In particular, they investigated the effect of weld pressure and weld time on the resultant seam strength. Results showed that these parameters need to be carefully controlled in order to maximise seam strength; the optimum value of these parameters also varied for the different fabrics. If weld times were too short, the thermoplastic fibres did not soften sufficiently and inadequate bonding between the two layers of fabric occurred. However, if weld pressures were too high, excessive melting of the fibres occurred and the bonds formed between fabric layers were weaker. Table 12.2 shows the seam efficiencies of ultrasonic bonded PET and Spectra fabrics; efficiencies of traditionally sewn seams are included for comparison.

Hayes and McLoughlin (2007) compared ultrasonically welded, sewn and sewn/tape-sealed seams used for waterproof polyester fabric. The sewn/tape-sealed seam was found to withstand a higher load than the welded seam, probably because of the double mechanism of the sewn seam and tape in maintaining seam integrity. The sewn and tape-sealed seam had a longer bending length than the welded seam, making it less flexible. Welded seams were found to have a greater load carrying capacity than sewn seams. There was no significant difference in bending length between welded and sewn seams. Table 12.3 summarises the relative performance of the three seam types.

Volkov (2002) described the use of ultrasonic welding to produce filters suitable for the filtration of sterile solutions. The filters investigated were formed from four layers of Lavsan knitted fabric using an ultrasound profile press welding method. Volkov concluded that this method could be used successfully to produce components for filtration. However, the strength of the welded joint and the strength of the individual layers in the fabric varied

Table 12.2 Comparison of the strength of ultrasonic bonded and sewn seams (from Ghosh and Reddy, 2009)

Fabric breaking load (lbf)	Ultrasonic seam breaking load (lbf)	Traditional seam breaking load (lbf)	Seam efficiency (%)	
			Ultrasonic	Traditional
PET fabrics				
112.6	26.1	31.5	23.2	28.0
Spectra fabrics				
450.0	22.1	22.1	4.09	4.09

© Woodhead Publishing Limited, 2013

INTEX EX. 1049, Pg. 15
Intex Recreation v. Bestway Inflatables, IPR2023-00489

Table 12.3 Relative performance of ultrasonically welded, sewn/tape-sealed and sewn seams (from Hayes and McLoughlin, 2007)

	Welded	Sewn and tape-sealed	Sewn
Load	Next best	Best	Worst
Extension	Worst	Best	Next best
Bending length	Best	Worst	Best

due to scattering and attenuation of the ultrasonic energy and the generation of differing amounts of heat between the layers. Optimisation of welding time, welding pressure and the amplitude of oscillations was again found to be essential.

There have been a number of studies of ultrasonic welding of nonwovens. Ozaltun *et al.* (2006) reported on the ultrasonic plunge welding of polypropylene blown microfibres with spunbonded cover web made from polypropylene and polyester fibres. Three different weld profiles were used: a rectangular solid profile; a diamond-shaped, repeated pattern; and a star-shaped repeated pattern. The rectangular weld profile produced the best bonding results, with the diamond-shaped pattern outperforming the star-shaped pattern. This was attributed to the higher weld area of the rectangular weld pattern. Ozaltun *et al.* (2006) also investigated the effects of three variables – weld time, vibration amplitude and weld pressure – on the resultant bond quality. The authors concluded that the optimum settings were 27.31 μm, 75 ms and 206.84 kPa for amplitude, weld time and weld pressure respectively; with vibration amplitude and weld time both having a significant effect on weld strength. Further increases in amplitude and weld pressure could produce a stronger seam but also resulted in apparel damage and marks on the fabric. For the lowest vibration amplitude investigated (19.09 μm), the weld strength was low because insufficient melting and fusion occurred.

Mao and Goswami (2001) described the ultrasonic bonding of bicomponent PET fibre batts and a spunbonded PET fabric, and the development of a model to predict the temperature change in webs during the bonding process. The authors used various combinations of weld pressure (20, 25 and 30 psi) and speed (0.048, 0.070 and 0.083 m/s). SEM analysis of the bonds showed that the degree of bonding was correlated with the temperature changes and the processing conditions. The slower speed resulted in fabrics that were stiffer, stronger and had a higher degree of bonding; as weld speed increased, the degree of bonding was reduced.

Medical applications using ultrasonic welding have also been explored. Bonds formed by ultrasonic welding have the advantage that they have no stitch holes and therefore form an effective barrier to chemicals, bloodborne pathogens and particulates. As a result, they are employed for the joining of textiles in many medical applications such as in medical gowns, caps, face

© Woodhead Publishing Limited, 2013

INTEX EX. 1049, Pg. 16
Intex Recreation v. Bestway Inflatables, IPR2023-00489

masks, hygiene products, surgical drapes, etc. Patil *et al*. (2010) reported on trials to develop an alternative joining process for endovascular graft-stent devices. These devices consist of a polyester textile graft material and a supporting wire stent. The complex design of these stents means that current manufacturing processes involve hand sewing with resultant high cost, long production times and quality control issues.

In earlier research, Patil *et al*. (2008) investigated two types of ultrasonic welding using a plunge-type welding machine and a wheel-type machine. In both machines the two fabrics to be joined were placed in a peel joint configuration (one on top of the other). In an alternative arrangement, and with the aim of increasing weld strength, a copolymer adhesive film was placed between the two fabrics. For the plunge-type process, the frictional heat generated between the two fabrics was not high enough to melt and fuse them together due to the fabrics being tightly woven, very smooth and only 0.1 mm thick. When the adhesive film (with a relatively lower melting point) was used, however, good welds were created for both the plunge-type and wheel-type machines. Although the welds initially appeared satisfactory, SEM images showed the fabrics had melted through the entire thickness which resulted in limited weld strength. The authors concluded that the complex design of the stent-graft systems and the thin fabrics involved mean that it is not yet feasible to use ultrasonic welding in this application.

Shi and Little (2000) investigated the use of ultrasonic bonding to create smart seams by incorporating optic fibres in military uniforms. Experiments were carried out to determine whether the technical performance of the optic fibres was affected adversely by the ultrasonic welding process. Owing to the potentially fast material processing speeds that can be obtained, ultrasonic bonding has applications in the automation of certain manufacturing processes. Longerich *et al*. (2003) reported on efforts to use CAD technology to combine ultrasonic cutting and welding processes on a single workstation to improve manufacturing efficiencies. The materials to be joined were foils and PU-coated textile films. The authors developed a manufacturing method whereby the pattern pieces to be processed were created in the CAD system and an optimal cutting plan created. The physical cutting and welding processes were then carried out using ultrasonic techniques. The cutting and welding parameters (such as weld energy, weld speed, pressure on the material) could be adjusted for each operation. The period between creating the blueprint based on CAD and actual fabrication was less than 30 minutes. The authors report a reduction in manufacturing time of about 80%.

12.5 Dielectric welding: an introduction

Dielectric welding is also known as high frequency (HF) welding and radio frequency (RF) heating or welding. Dielectric welding generates heat in

© Woodhead Publishing Limited, 2013

INTEX EX. 1049, Pg. 17
Intex Recreation v. Bestway Inflatables, IPR2023-00489

a polymer as a result of the application of a high frequency alternating electric field (around 27 MHz). The oscillating field generates motion in the molecules of certain polymer types which is converted to heat. This process is often described as bulk heating in contrast to heat sealing which is purely conductive heating.

Dielectric welding is only applicable to materials with:

- polarisable or polarised macromolecules with comparatively short chains
- good mobility of the molecule segments
- occurrence of inducible dipoles.

If these properties are present, the molecules start to oscillate as soon as the alternating field is applied, secondary valency forces weaken and molecules can interchange sites. Typical materials with these properties include poly(vinyl chloride) (PVC or vinyl), poly(ethylene-co-vinyl acetate) (EVA) and thermoplastic polyurethane (TPU). Polyamide (nylon) can be welded in a dielectric field if a pre-heat to approximately 50°C is applied. This is normally achieved by heating the electrode used in the process. Polyolefin fibres can be used either if a copolymer of ethylene with a polar comonomer is used or, alternatively, a multi-layer laminate film is employed using polyolefin and a polar polymer (Anon., 1995). The blending of linear low density polyethylene (LLDPE) to produce a material suitable for dielectric welding has been described, for example, by Yoon *et al*. (2008). Hollande *et al*. (1998) have reviewed dielectric welding of polyurethane elastomer-coated fabric. Table 12.4 shows how suited a range of materials are to dielectric welding.

The advantages of dielectric welding include the following:

- It is a clean process.
- Heating is localised, minimising fabric distortion.
- Material is 'bulk' heated rather than conduction heated, which reduces cycle times and allows the electrodes to be run cool, improving consistency compared to heat sealing.
- It is possible to heat contact surfaces to provide a strong weld without damaging the outer surfaces of the materials being joined.
- It produces a hermetic seal.
- It is easily controlled and automated.
- It is a relatively quick process (a few seconds to complete a weld) which needs little warm-up time to reach consistent processing.

Disadvantages include the following:

- It is restricted to a limited range of materials such as polyurethane and PVC fibres or coatings.
- The process is not continuous but limited to platens or electrode bars

© Woodhead Publishing Limited, 2013

INTEX EX. 1049, Pg. 18
Intex Recreation v. Bestway Inflatables, IPR2023-00489

Table 12.4 Suitability of textile materials for dielectric welding

Material	Response				
	Excellent	Good	Fair	Poor	None
ABS polymers		×			
Acrylics			×		
Cellulose acetate (clear)		×			
Cellulose acetate (colour)		×			
Cellulose acetate butyrate		×			
Cellulose nitrate			×		
Cellulose triacetate			×		
CPET					×
Ethyl cellulose					×
EVA (Ethyl vinyl acetate)		×			
EVOH (Ethyl vinyl alcohol)			×		
Nylon (Polyamide)			×		
PET (Polyethylene terephthalate)		×			
PETG (Polyethylene terephthalate glycol)	×				
Pliofilm (Rubber hydrochloride)	×				
Polychlorotrifluoroethylene				×	
Polyester				×	
Polyethylene (All)					×
Polymethyl (Methacrylate)			×		
Polypropylene					×
Polystyrene					×
Polyurethane			×		
Polyurethane foam				×	
Polyurethane-vinyl film		×			
Polyvinyl acetate		×			
Polyvinyl chloride (PVC) (flexible, clear)	×				
Polyvinyl chloride (PVC) (colour)	×				
Polyvinyl chloride (PVC) (opaque)		×			
Polyvinyl chloride (PVC) (semi rigid)		×			
Polyvinyl chloride (PVC) (rigid)			×		
Polyvinyl chloride (PVC) (flexible, glass-bonded)	×				
Polvvinvl chloride (PVC) (coated cloth & paper)	×				
Polyvinyl chloride (PVC) (adhesive emulsions)	×				
Saran (Polyvinylidene chloride)	×				

typically less than 2m in dimension. Longer seams can be made using repeated indexing of the material under a bar.

- PVC emits volatile organic compounds (VOCs) when heated.
- There is a potential risk to operators or surrounding equipment from high-frequency radiation. Dielectric welding equipment is usually shielded.

12.6 Equipment for dielectric welding

A typical dielectric welding machine is shown in Fig. 12.6. It uses two electrodes (also known as platens):

© Woodhead Publishing Limited, 2013

INTEX EX. 1049, Pg. 19
Intex Recreation v. Bestway Inflatables, IPR2023-00489

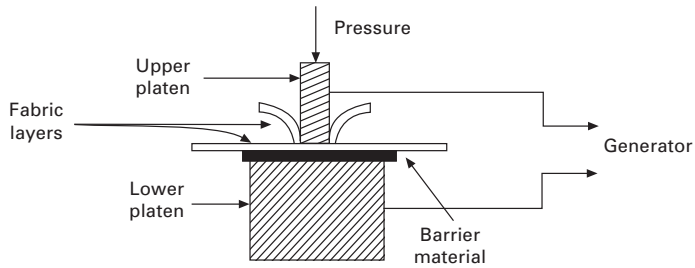

12.6 A typical dielectric welding machine.

- upper platen
- lower platen.

The platens are connected to the dielectric supply. The upper platen is movable to allow the electrode to be brought into contact with the fabric. The weld is created by the combination of the effect of the alternating electric field generated by the electrodes and the downward pressure of the upper platen. The lower platen is usually fixed in position and earthed. The lower platen usually serves as the work surface over which the fabric is spread. The temperature of both platens is often controlled to counteract uncontrolled heating of the platens caused by the dielectric supply. A heated platen reduces heat loss from the fabric, allowing a larger area to be welded for a given dielectric power rating and a more consistent weld. Heated platens are also used to allow welding of materials which do not heat from cold using a dielectric field.

When high frequency power is passed between the electrodes, an alternating electric field is generated through the materials. As has been noted, the switching electric field agitates the molecules in the material, causing it to heat up. The process generates heating throughout the thickness of the materials. However, the heating effect is at a maximum at a point half way between the electrodes at the junction of the two materials to be joined.

When the electrodes sink into the fabric pieces to be joined, they require more power from the generator. When the fabric reaches melting point, an electrical change occurs which causes power to reduce. This reduction is often used to mark the completion of a weld. Once the materials have fused, the dielectric power is switched off to prevent overheating of the fabric pieces and the joined fabric is allowed to cool. Typically cooling time is 20% the length of the weld time. It is evident that it is possible to monitor the weld by measuring the changes in the dielectric properties of the material being welded. This is an output that can be sensed directly from the process electrodes, and can be used to control the power applied and heating cycle of the weld. A further extension of this concept would allow the materials to

© Woodhead Publishing Limited, 2013

INTEX EX. 1049, Pg. 20
Intex Recreation v. Bestway Inflatables, IPR2023-00489

be checked in advance of welding. The dielectric response of the materials would be measured by applying a short pulse of RF energy. The materials could be rejected or the processing conditions modified to ensure consistent welding performance.

Upper electrodes with a wide range of sizes and configurations can be employed. Typically the electrodes are shaped to the components to be welded. The electrode design can be varied to produce different seams or to trim the edges of textile pieces. Electrodes can also be engraved to emboss a pattern on the seam if required. If the electrodes are long enough, dielectric welding can produce whole seams in one continuous process. With well-designed electrodes, the temperature of the electrodes themselves seldom needs to exceed 40°C.

Where either very thin layers or layers of unequal thickness are to be welded, it is essential to include a dielectric barrier material of up to 0.5 mm thickness between the electrodes and the fabric to ensure that welding is uniformly applied. Barriers are also essential in tear-seal welding (see below) to prevent electrical contact between the cutting edge of the upper platen and the lower platen, which would cause an arc, which is evident as burnt patches in the welded seam, possibly puncturing the materials. Typical barrier materials are composites including:

- glass-fibre fabric coated with polytetraflourethylene
- natural and silicon rubbers (with fabric backing)
- poly(ethylene terephthalate) film (with paper backing)
- varnished cotton fabric.

The generator produces the high frequency electricity required for welding. The maximum output power level required varies, depending on such factors as the type and thickness of the weld materials and the area of the required weld. The power rating is one of the most important parts of a machine's specification, varying from a few hundred watts to tens of kilowatts. A single valve or electronic oscillator is typically employed working at a pre-set output frequency. The oscillator is supplied with a high-voltage direct current from a transformer-rectifier power pack unit. The tuning of the electrical circuit is usually achieved with a variable capacitor.

There are two main types of dielectric welding:

- plain welding
- tear-seal welding.

These are illustrated in Fig. 12.7. Tear-seal welding involves the simultaneous welding and cutting of a material. This is achieved by placing a cutting edge adjacent to the welding edge. The cutting edge compresses the material so that it can be separated into two. The ratio of the compressed thickness of the welded area to the combined thickness of the original two layers is known

© Woodhead Publishing Limited, 2013

INTEX EX. 1049, Pg. 21
Intex Recreation v. Bestway Inflatables, IPR2023-00489

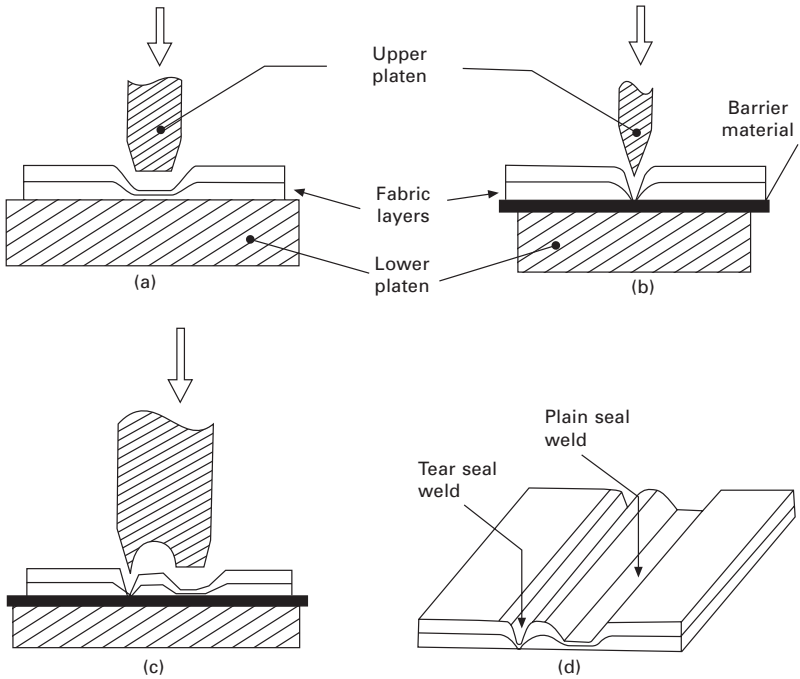

12.7 Types of dielectric welding: (a) plain-seal welding; (b) tear-seal welding; (c) combined plain and tear-seal welding; (d) combined weld from (c).

as the welding differential. Plain and tear-seal welds can be combined to provide a particularly strong bond together with a sharp edge to the fabric. There are also more specialised dielectric welding techniques. In appliqué dielectric welding, a flexible vinyl of a different colour is superimposed and welded over a substrate. The surplus material is removed to leave a decorative surface with contrasting colours and surface variation.

There are various ways of handling materials for welding:

- manual: fabrics are fed, positioned and removed by hand
- linear: a conveyor belt feeds fabrics to the machine, positions them (a process known as 'indexing') and removes them after welding
- rotary: a circular table rotates to position fabrics under the welding unit; this configuration allows operators to assemble more complex workpieces before they are welded and then carry out further operations (e.g., stripping off surplus material from tear-seal welding) as required
- rail: large components (e.g. tarpaulins) may need to be held in a stationary position whilst the welding unit is moved along a rail to make repeated welds.

© Woodhead Publishing Limited, 2013

INTEX EX. 1049, Pg. 22
Intex Recreation v. Bestway Inflatables, IPR2023-00489

12.7 Factors affecting the quality of dielectric welding

Various material factors affect weldability. These include:

- thickness
- flexibility: a softer material requires less power to achieve a good weld
- the presence of surface contaminants, films or lubricants.

The impact of coatings on dielectric welding has, for example, been discussed by Skripnik *et al*. (1984). Typical welding parameters are within the following ranges:

- time: 1–6 seconds
- pressure: 1–3 kgf/cm^2
- voltage: 3–15 kV
- frequency: 27.12 MHz
- Electrode temperature: 20–40°C.

The key process parameters are time, pressure (including depth of sink) and high-frequency voltage (Anon., 1995). Faster welds can, for example, be achieved using greater pressures. Depending on material type and thickness, pressures as low as 1 kgf/cm^2 can be used to obtain a weld. An important aspect of pressure is controlling depth of sink. The sink control limits how far the electrode will sink into the fabric. Adjusting the depth of sink can help in achieving maximum weld strength. Excessive depth of sink will lead to a thinner and weaker weld. The depth of sink can also help to control the melt profile at the edges of the weld, which is important in defining the tensile and fatigue performance of the joints made. In terms of power applied, a rough rule of thumb is 1 kW of RF power per 30 cm^2 of weld area, depending on the fabric.

12.8 Applications of dielectric welding

Dielectric welding is used for cutting and joining PVC films or sheets. It is suitable for both woven and non-woven fabrics. Dielectric welding is used in packaging in such areas as sachets and blister packs. Because of the water and airtight quality of the seal, dielectric welding is used to join PVC and polyurethane-coated fabrics in such applications as inflatable life jackets, life rafts and other buoyancy equipment, as well as air beds and inflatable toys. It is also used to join materials for inflatable temporary structures, e.g. for sporting and leisure events, tents, marquees and tarpaulins.

Dielectric welding is also well suited to the manufacture of medical products, e.g. containers such as blood or colostomy bags. The use of the

© Woodhead Publishing Limited, 2013

INTEX EX. 1049, Pg. 23
Intex Recreation v. Bestway Inflatables, IPR2023-00489

technique for implanted medical devices is discussed by Yussuf *et al*. (2007). Specific applications in medical textiles include:

- blood bags, blood separation systems and blood pressure cuffs
- urinary drainage, colostomy and enema bags
- *in vitro* feeding bags
- wound evacuation pumps and bags
- pulsating air and water mattresses (e.g., for pressure relief in preventing sores)
- stretcher and bed covers and pads (including vacuum mattresses for immobilising patients during transport)
- oxygen tents and mobile clean rooms.

Dielectric is used in protective clothing, e.g. rainwear and waterproof one- or two-piece polyurethane clothing for motorcyclists, high-visibility clothing for the emergency services, chemical or biological protective clothing. Specific non-medical applications include:

- HAZMAT and radiation suits
- survival suits (e.g., for naval personnel)
- industrial gloves
- rainwear
- life jackets/vests and buoyancy aids
- inflatable boats
- tents and tarpaulins
- conveyor belts
- gel and foam-filled inserts for shoes
- slippers.

12.9 References and further reading

Anon. (1995), *High Frequency Welding Handbook*, Federation of High Frequency Welders.

Benatar A and Gutowski T G (1989), Ultrasonic welding of PEEK graphite APC-2 composites. *Polymer Engineering and Science*, 29, 1705–1721.

Branson Ultrasonic Corporation (2011), Technical Information Sheet PW-7.

Chen J-W and Zykbo J M (2005), Diode laser bonding of planar microfluidic devices, MOEMS, bioMEMS, diagnostic chips and microarrays. *Proc SPIE*, 5718, 92–98.

Curtis *et al*. (2004), The uses and advantages of laser sealing in high density assay plates. *Society of Biomolecular Sciences 10th Conf*., 11–15 September.

Devine J (1998), Ultrasonic bonding of plastics and textiles for medical and other devices. In: *Joining Applications in Electronics and Medical Devices. Proceedings, ICAWT '98 International Conference on Advances in Welding Technology*, 30 September–2 October, Columbus, OH: Edison Welding Institute.

Froment I D (1999), *Ultrasonic Welding of Thermoplastics*, Cambridge: TWI.

Ghosh S and Reddy R (2009), Ultrasonic sealing of polyester and Spectra fabrics using

© Woodhead Publishing Limited, 2013

INTEX EX. 1049, Pg. 24
Intex Recreation v. Bestway Inflatables, IPR2023-00489

thermoplastic properties. *Journal of Applied Polymer Science*, 113, 1082–1089.

Grewell D and Benatar A (2003), Experiments in micro-welding of polycarbonate with laser diodes. *Proc. ANTEC conference of the Society of Plastics Engineers*, May, 1039–1044.

Haire K R and Windle A H (2001), Monte Carlo simulation of polymer welding. *Computational and Theoretical Polymer Science*, 11(3), 227–240.

Hayes S G and McLoughlin J (2007), Welded and sewn seams: a comparative analysis of their mechanical behaviour. In: Ariadurai S A & Wimalaweera W A (eds) *The Textile Institute 85th World Conference*, 1–3 May 2007, Colombo, Sri Lanka, pp. 131–142.

Hollande S, Laurent J-L and Lebey T (1998), High-frequency welding of an industrial thermoplastic polyurethane elastomer-coated fabric. *Polymer*, 39(22), 5343–5349.

Hustedt M *et al*. (2006), Laser micro welding of polymeric components for dental prostheses. *Proc. SPIE*, 6107.

Jones I A (2006), Precision laser welding of plastic components. TWI members report.

Jones I A and Olden E (2000), 'A thermal model for transmission laser welding of thermoplastic polymers', TWI Members report 708/2000, July.

Jones IA and Taylor NS (1994), High speed welding of plastics using lasers. *ANTEC '94 conference proceedings*, 1–5 May, San Francisco, CA.

Klotzbuecher T *et al*. (2004), Microclear – a novel method for diode laser welding of transparent microstructured polymer chips. *Proceedings of the 23rd International Congress on Applications of Lasers and Electro-Optics*.

Longerich B, Clausnitzer B and CompMess GmbH & Co (2003), XY plot editing table with ultrasonic cutting and ultrasonic welding system for foil and coated textile film. *Technical Textiles*, 46.

Mao Z and Goswami B C (2001), Studies on the process of ultrasonic bonding of nonwovens: Part 2: Experiments and results. *International Nonwovens Journal*, Fall, 17–28.

McCrum N G, Buckley C P and Buckley C B (1988), *Principles of Polymer Engineering*, Oxford: Oxford University Press.

Ozaltun H, Benatar A and Nayar S K (2006), Ultrasonic plunge welding of polypropylene nonwovens, ANTEC 2006, *Annual Technical Conference of the Society for Plastics Engineers*, pp. 2184–2188.

Patil A, Jones I, Ashton T and Tavakoli M (2008), 'Investigation into novel joining techniques for rapid and automated manufacturing of a new generation of endovascular grafts', *Proceedings of Health Technologies KTN/University of Brighton Annual Conference*, 3 April.

Patil A, Jones I and Ashton T (2010), 'New manufacturing methods for vascular grafts using laser welding and laser cutting techniques', *Joining Plastics 2010* – 2nd DVS/WJS Conference, Dusseldorf, Germany, November.

Pfleging W *et al*. (2005), Laser assisted welding of transparent polymers for micro-chemical engineering and life science. *Proc SPIE*, 5713 479–488.

Shi W and Little T (2000), Mechanisms of ultrasonic joining of textile materials. *International Journal of Clothing Science and Technology,* 12(5), 331–350.

Simpson W (1995), Sealing and welding of thermoplastic materials. In *Plastics: Surface and Finish*, Cambridge: Royal Society of Chemistry.

Skripnik V, Radzieski V and Butov V (1984), Materials with a fibrous structure welded in a high-frequency current field. *Automatic Welding*, 2, 54–56.

Tolunay M N (1982), An experimental study of the bonding mechanism in the ultrasonic welding of thermoplastics. PhD thesis, Cornell University.

© Woodhead Publishing Limited, 2013

INTEX EX. 1049, Pg. 25
Intex Recreation v. Bestway Inflatables, IPR2023-00489

Truckenmuller *et al*. (2006), Micro ultrasonic welding: joining of chemically inert microparts for single microfluidic components and systems. *Microsyst Technol*, 12, 1027–1029.

Tsujino J, Hongoh M, Tanaka R, Onoguchi R and Ueoka T (1986), Ultrasonic plastic welding with a welding tip pair. *Japanese Journal of Applied Physics*, 25, Supplement, 168–170.

Ussing T *et al*. (2005), Micro laser welding of polymer microstructures using low power laser diodes. *Proc Int Conf on multi-material micro manufacture*, Karlsruhe, 291–293.

Volkov S S (2002), Ultrasonic welding of knitted Lavsan fabric filters. *Welding International*, 16, 664–665.

Warwick C M and Gordon M (2006), Application studies using through-transmission laser welding of polymers. *Proc. Joining Plastics 2006*, 25–26 April, NPL, London.

Wise R J (1999), *Thermal Welding of Polymers*, Cambridge: Abington Publishing.

Wool R P (1995), *Polymer Interfaces: Structure and Strength*, Carl Hanser Verlag.

Yoon C, Lee E, Yang M, Song C, Yang C, Kim K and Kim B (2008), High frequency welding of thermoplastic LLDPE/PA 6/PE-*g*-MAH ternary blends. *Journal of Applied Polymer Science*, 109, 3355–3360.

Yussuf A, Sbarski I, Solomon M, Tran N and Hayes J (2007), Sealing of polymeric-microfluidic devices by using a high frequency electromagnetic field and screen printing technique. *Journal of Materials Processing Technology*, 189(1–3), 401–408.

© Woodhead Publishing Limited, 2013

INTEX EX. 1049, Pg. 26
Intex Recreation v. Bestway Inflatables, IPR2023-00489