US008701226B2

(12) **United States Patent**
Faucher et al.

(10) **Patent No.: US 8,701,226 B2**
(45) **Date of Patent: Apr. 22, 2014**

(54) **CONDUCTIVE CONNECTION FOR TRACK-RIDING PATIENT HOISTS**

(75) Inventors: **Martin Faucher**, Magog (CA); **Michael Molinar**, Eastman (CA); **Michael Corriveau**, St-Denis-de_Brompton (CA); **Jocelyn Patry**, Sherbrooke (CA)

(73) Assignee: **Arjohuntleigh Magog Inc.** (CA)

(*) Notice: Subject to any disclaimer, the term of this patent is extended or adjusted under 35 U.S.C. 154(b) by 393 days.

(21) Appl. No.: **12/867,950**

(22) PCT Filed: **Feb. 4, 2009**

(86) PCT No.: **PCT/IB2009/005034**

§ 371 (c)(1),
(2), (4) Date: **Sep. 15, 2010**

(87) PCT Pub. No.: **WO2009/104096**

PCT Pub. Date: **Aug. 27, 2009**

(65) **Prior Publication Data**

US 2011/0000015 A1 Jan. 6, 2011

Related U.S. Application Data

(60) Provisional application No. 61/029,503, filed on Feb. 18, 2008.

(51) **Int. Cl.**
A61G 7/10 (2006.01)

(52) **U.S. Cl.**
USPC **5/85.1**; 5/83.1; 414/921

(58) **Field of Classification Search**
USPC ..... 5/81.1 R, 83.1, 85.1; 104/91, 94, 288, 104/295; 212/328, 331, 346; 414/560, 561, 414/921; 191/23 A, 33 R, 35, 50, 59.1, 72, 191/74; 105/149.2, 155
See application file for complete search history.

(56) **References Cited**

U.S. PATENT DOCUMENTS

2,443,387	A *	6/1948	Harris	191/23 A
3,646,613	A *	2/1972	Matsumoto et al.	104/295
3,820,469	A	6/1974	Rikman et al.	
3,848,714	A *	11/1974	Claxton et al.	191/33 R
5,138,953	A *	8/1992	Horcher et al.	105/149.2
5,147,051	A	9/1992	Liljedahl	
6,711,759	B1	3/2004	Kluckhuhn	
7,237,491	B2	7/2007	Faucher et al.	
7,516,857	B2 *	4/2009	Muller et al.	212/271
7,850,026	B2 *	12/2010	McKay	212/315

FOREIGN PATENT DOCUMENTS

WO WO 88/09159 A1 12/1988

* cited by examiner

Primary Examiner — Robert G Santos
Assistant Examiner — Nicholas Polito
(74) *Attorney, Agent, or Firm* — Craig A. Fieschko, Esq.; DeWitt Ross & Stevens S.C.

(57) **ABSTRACT**

A patient hoist is provided on a trolley which tides along a track, with the hoist being powered by a conductor extending along the track. A contact carrier is loosely fit within the trolley, and it bears a contact which elastically biased against the track conductor, with die contact being in electrical communication with the hoist: The contact carrier is tree to laterally displace with respect to the trolley so that it (and its contact) follows the contour of the track, with the contact remaining in electrical communication with the track conductor.

23 Claims, 4 Drawing Sheets

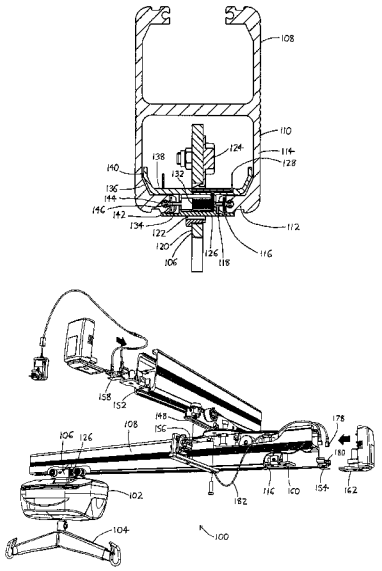

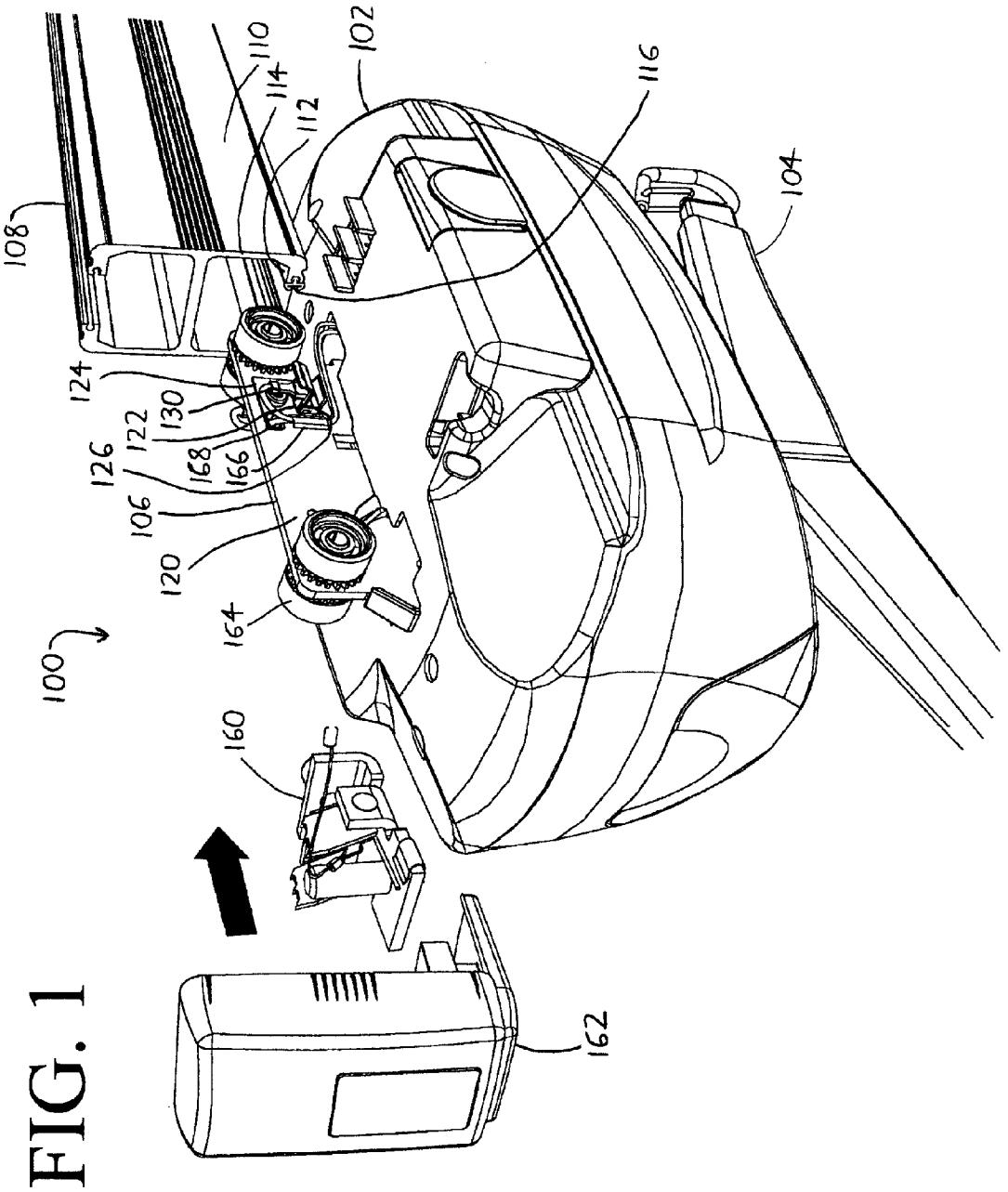
100
102
104
106
108
110
112
114
116
120
122
124
126
130
160
162
164
166
168

FIG. 1

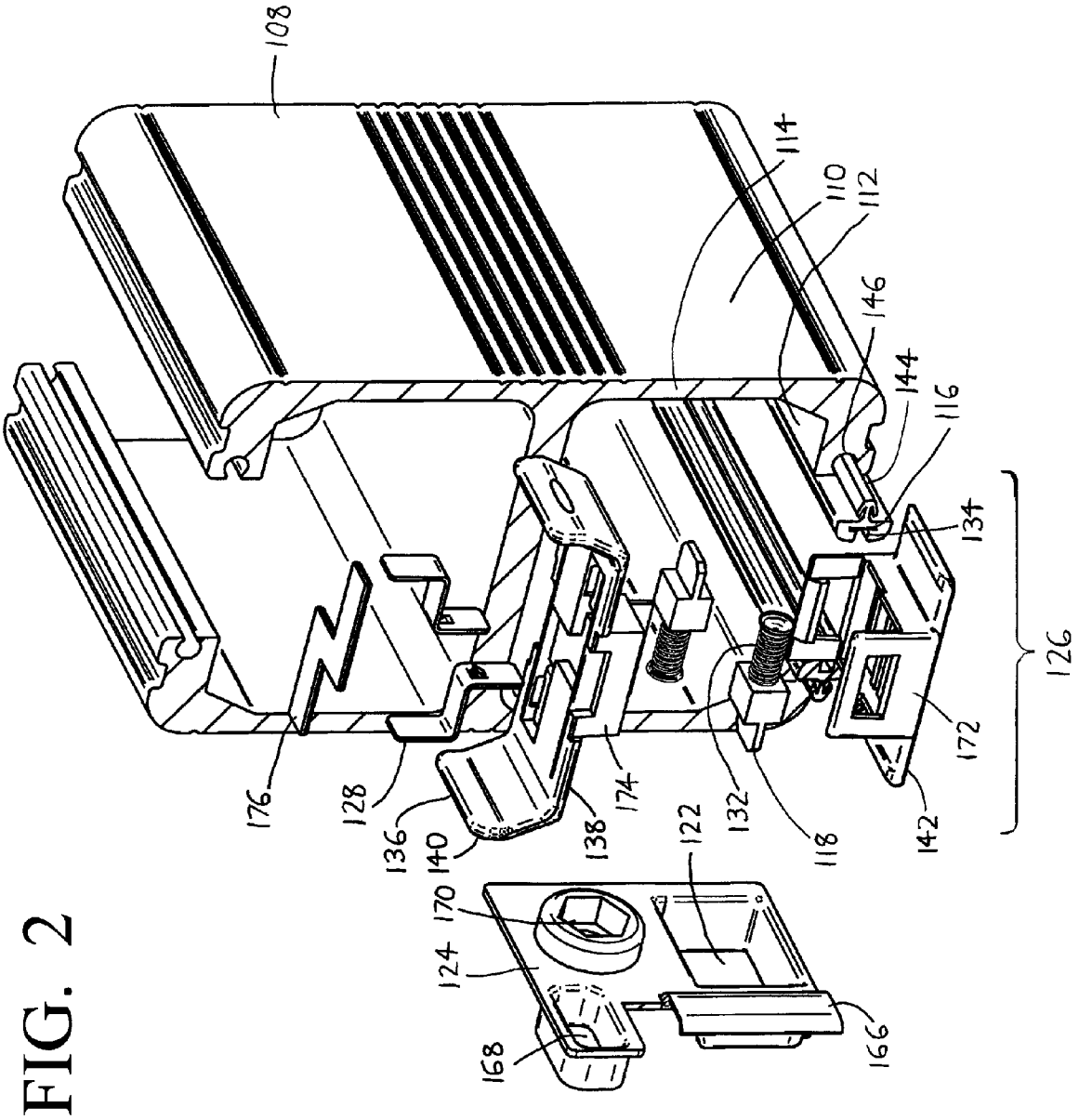
108
114
110
112
146
144
116
134
126
172
142
118
132
122
174
138
140
136
128
176
170
124
168
166

FIG. 2

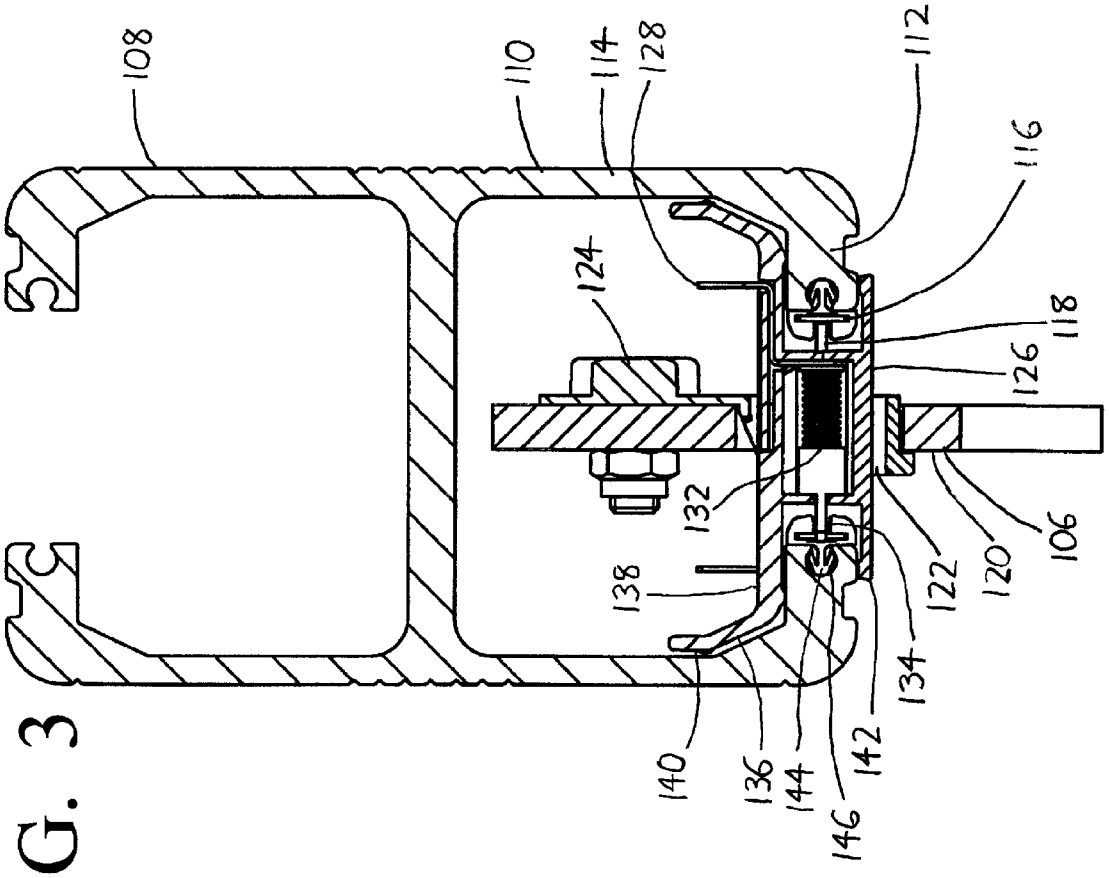
108
110
114
128
112
116
124
118
126
132
138
106
120
122
134
140
136
144
146
142

FIG. 3

FIG. 4

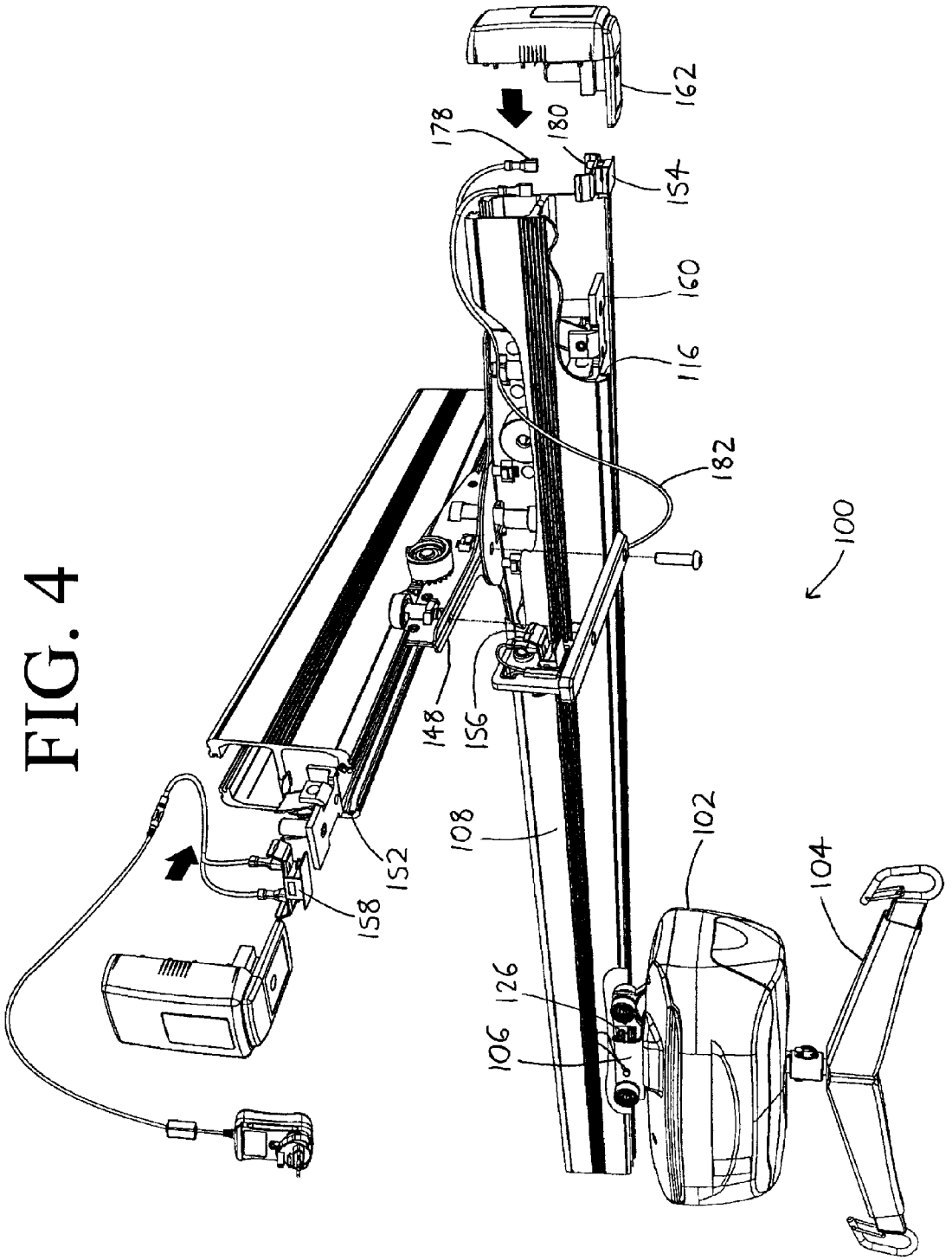
162
178
180
154
160
116
182
100
148
156
108
102
104
152
158
126
106

CONDUCTIVE CONNECTION FOR TRACK-RIDING PATIENT HOISTS

FIELD OF THE INVENTION

This document concerns an invention relating generally to hoists which ride on ceiling-mounted or other tracks to various locations to lift or convey patients or equipment, and more specifically to hoists of this nature which require electric power supply at various locations along the track.

BACKGROUND OF THE INVENTION

Hoists which ride on ceiling-mounted or other tracks are commonly used in hospitals and other care centers, as well as in the homes of those with mobility impairments, to convey people and/or equipment to different areas (e.g., from a bed to a bathroom). Examples of such hoists are provided, for example, in U.S. Pat. No. 7,237,491 to Faucher et al., International (PCT) Patent Appln. Publication WO 88/09159, and in other patents cited in (and citing to) these references. Such hoists are usually electrically-powered, and they may ride on the tracks via manually-driven trolleys, or trolleys which are themselves electrically driven to assist in driving the hoists along their tracks. Power may be provided to the hoists via elongated flexible cables that follow the hoists along their tracks, but these can cause difficulties owing to the length of cable needed where the hoists are to travel long distances, and owing to the desire to avoid cable slack and dangling cable. Hoists have also been developed which are powered by rechargeable batteries, with the batteries being recharged when the hoist is placed at a docking position near the end of a track (or at any one of several docking positions along the track). These too pose difficulties in that users often forget to place the hoists back in their docking positions after use, leading to dead batteries and hoists which are inoperative until they are recharged (which can lead to hardships for their users). Some hoists have a feature wherein their trolleys automatically drive the hoists to a charging station when not in use, thereby better ensuring that their batteries remain charged. However, such "return-to-charger" features are sometimes thwarted when objects (such as curtains, IV equipment, monitors, etc.) obstruct the return paths of the hoists. Additionally, return-to-charger features cannot easily be implemented in "moving-track" systems such as the ones shown in U.S. Pat. No. 7,237,491, wherein the track on which the hoist rides itself rides on another track (e.g., a first track aligned along one direction is relocatable on a second track oriental perpendicularly from the first track). In such systems, the hoist can move in a variety of directions (e.g., about a plane), but it is difficult to devise an inexpensive and reliable arrangement for having both the hoist and the track on which it rides reliably return to a charging station.

Owing to the foregoing problems, there has long been interest in development of a hoist which receives (or is capable of receiving) power at all times, regardless of its position along the track, and without the need for umbilical cables, and which is suitable for use in moving-track systems. One possible solution that might be contemplated is to have the track (or a portion thereof) conduct power to the trolley, which could in turn power the hoist, in a manner similar to the way in which a "third rail" powers an electric train and the components therein. However, the arrangements used in trains and the like are not reliably and inexpensively reproducible on the scale of a hoist, since hoists use substantially smaller tracks (which tend to travel along paths having substantially sharper radii of curvature than train tracks and the like). A key difficulty is in maintaining a reliable conductive connection between the trolley and track, particularly when the trolley travels about a curve in the crack; at this time, the contacts between the trolley and track are more likely to disengage, causing loss of power to the trolley in hoist systems.

SUMMARY OF THE INVENTION

The invention, which is defined by the claims set forth at the end of this document, is directed to devices which at least partially alleviate the aforementioned problems. A basic understanding of some of the features of preferred versions of the devices can be attained from a review of the following brief summary of the invention, with more details being provided elsewhere in this document. To assist in the reader's understanding, the following review makes reference to the accompanying drawings of an exemplary preferred version of the devices (with these drawings being briefly reviewed in the "Brief Description of the Drawings" section following this Summary section of this document).

Initially referring to FIG. **1**, a patient lift **100** includes a hoist **102** with an electrically-actuated lifting member **104** which is movable between raised and lowered states (with the lifting member **104** here being depicted as a harness bar, though slings, seats, baskets, or other lifting members are possible). A hoist trolley **106** is attached to the hoist **102**, with the hoist trolley **106** riding along a track **108** to transport the hoist **102** to different locations. The track **108** has opposing spaced track sides **110** (see also FIG. **2**), each of which has an elongated track floor **112** which is oriented at least substantially horizontally, and an elongated track wall **114** extending upwardly from the track floor **112**. Preferably, each track side **110** bears a track conductor **116** which, as will be discussed below, is intended to communicate power to the hoist **102** to enable actuation of its lifting member **104**. In the exemplary patient lift **100** shown in the drawings, the track conductors **116** are provided on the opposing edges of the track floors **112** of the track sides **110**. At least a portion of the hoist trolley **106** rides between the track sides **110**, with wheels, pinions, or other drive members allowing the hoist trolley **106** to roll or be driven along the track **108**. The hoist trolley **106** then bears trolley contacts **118** (see FIG. **3**) which are biased outwardly into contact with the track conductors **116**, with the trolley contacts **118** being in electrical communication with the hoist **102**. As a result, electrical power borne by the track conductors **116** is communicated to the trolley contacts **118** and in turn to the hoist **102**.

The hoist trolley **106** has opposing right and left trolley sides **120** (with only the right Side being visible in FIG. **1**), and a contact carrier channel **122** (best seen in FIG. **2**, provided on an insert **124** received within the hoist trolley **106**) extends between the right and left trolley sides **120**. A contact carrier **126** is fit within the contact carrier channel **122**, and the contact carrier **126** includes the trolley contacts **118** (FIG. **3**) thereon so that the trolley contacts **118** extend outwardly from the opposing sides of the contact carrier **126**. The contact carrier **125** is movable within the contact carrier channel **122** so mat it may move in at least one dimension with respect to the hoist trolley **106** and hoist **102**, namely, in the lateral (rightward/leftward) direction. Preferably, the contact carrier channel **122** is dimensioned such that its bounds (inner perimeter) are at least slightly greater than the bounds (outer perimeter) of the contact carrier **126**, so that the contact carrier **126** may also move at least vertically within the hoist trolley **106**. When the hoist trolley **106** is installed to ride on the track **108** (see particularly FIG. **3**), the contact carrier **126** is situated

between the track sides **110** with the trolley contacts **118** extending into contact with the track conductors **116**. The trolley contacts **118** are in conductive communication with contact connectors **128**, which can in turn be connected to hoist connectors **130** (see FIG. **1**) which communicate power to the hoist **102**. Thus, power supplied to the track conductors **116** (see FIG. **3**) is in turn communicated to the trolley contacts **118**, and then in turn to the contact connectors **128**, the hoist connectors **130** (FIG. **1**), and the hoist **102**, whereby a hoist **102** riding along the track **108** may receive power at various locations along the track **108**. The contact carrier **126**, which is only restrained to the hoist trolley **106** and hoist **102** by the inner bounds of the contact carrier channel **122** (and by the flexible connection between the contact connectors **128** and hoist connectors **130**, see FIG. **1**), is therefore urged along the track sides lift by the hoist trolley **106**, but is displaceable with respect to the hoist trolley **106** as the hoist trolley **106** rides between the track sides **110** so that the trolley contacts **118** may always remain in conductive communication with the track conductors **116**. This conductive communication is also assisted by biasing the trolley contacts **118** elastically outwardly from the contact carrier **126** sides, as by the springs **132** shown in FIGS. **2** and **3**, so that the trolley contacts **118** remain in contact with the track conductors **116**. Because the contact carrier **126** displaces between the track sides **110** to follow their contours (and since the trolley contacts **118** are elastically biased into contact with the track conductors **116**), the contact problems that may arise as the hoist trolley **106** and hoist **102** travel about the track **108** are at least substantially avoided.

Other useful features may be implemented to maintain and enhance conductive communication between the trolley contacts **118** and the track conductors **116**. As one example, best seen in FIGS. **2-3**, each track conductor **116** may be situated within a conductor groove **134** in its track side **110**, with each trolley contact **118** extending within a conductor groove **134** to contact one of the track conductors **116**. The track conductors **116** art thereby guided by the surfaces of the conductor grooves **134** to remain in contact with the track conductors **116**.

As another example, upper contact covers **136** (see FIGS. **2-3**) may be provided to extend outwardly from the contact carrier **126** above the trolley contacts **118**, with the upper contact cover **136** riding above and closely adjacent to the track sides **110** so that the track sides **110** urge the upper contact covers **136** (and thus the contact carrier **126** and trolley contacts **118**) into proper conductive alignment as the hoist trolley **106** and contact carrier **126** travel along the track **108**. Each upper contact cover **136** preferably includes a first upper contact cover portion **138** extending outwardly from the hoist trolley **106** above and closely adjacent to one of track floors **112**, and a second upper contact cover portion **140** extending upwardly from the first upper contact cover portion **138** closely adjacent to one of the track walls **114**. The second upper contact cover portion **140** usefully helps to guide the contact carrier **126** between the track sides **110**, while the first upper contact cover portion **138** assists in preventing detritus from falling between the trolley contacts **118** and track conductors **116**. Lower contact covers **142** can also be provided to extend outwardly from the contact carrier **126** sides below and closely adjacent to the track sides **110** to provide further protection against foreign matter, as well as protection against inadvertent contact of the conductive components by personnel servicing the hoist **102** and hoist trolley **106**.

To assist in easy maintenance of the track conductors **116**, they are preferably provided as strips which are readily installable and removable within the track sides **110**. Thus, as best seen in FIGS. **2-3**, each track conductor **116** may bear a protruding connection tongue **144**, and each track side **110** may bear a connection groove **146**, with the connection tongue **144** being removably fit within the connection groove **146**.

The foregoing arrangements may be usefully implemented in both fixed-track systems (as in FIG. **1**) and in moving-track systems (as in FIG. **4**). Looking to the exemplary moving-track system of FIG. **4**, the hoist **102** and its hoist trolley **106** may electrically communicate with the (lower) track **108** as described above, and the lower track **108** may then bear a track trolley **148** which rides on an upper track **150**. The upper track **150** may then include an upper track conductor **152** (e.g., track conductors similar to those discussed previously) in electrical communication with the track conductors **116** of the lower track **108**. One aid of the lower track **108** bears a stationary contact carrier **154** in conductive communication with the track conductors **116** of the lower track **108**, with leads from this stationary contact carrier **154** leading to a mobile contact carrier **156** within the track trolley **148** (this mobile contact carrier **156** being shown in FIG. **4** in a position "exploded" downwardly from the track trolley). The upper track **150** then has a stationary contact carrier **158** leading to a power supply (not shown). Thus, the power supply supplies power in turn to the stationary contact carrier **158** of the upper track **150**, the track conductor(s) **152** of the upper track **150**, the mobile contact carrier **156** of the track trolley **148**, the stationary contact carrier **154** of the lower track **108**, the track conductors **116** of the lower track **108**, and finally the mobile contact carrier **126** of the hoist trolley **106**, and thus to the hoist **102**.

Further versions, features, and advantages of the invention will be apparent from the remainder of this document in conjunction with the associated drawings.

BRIEF DESCRIPTION OF THE DRAWINGS

FIG. **1** is a partially exploded perspective view of a patient lift **100** including a hoist **102** having a hoist trolley **106** which travels along the track **108** (the hoist trolley **106** being shown ready for installation within the track **108**), with a stopping mechanism **160** for the hoist trolley **106** and an endcap **162** also being shown spaced away from the track **108** wherein they are installed.

FIG. **2** is an exploded perspective view of a section of the track **108** (and its track conductors **116**) shown with the insert **124** of the hoist trolley **106**, and with the contact carrier **126** shown disassembled into its component lower carrier portion **172**, upper carrier portion **174**, trolley contacts **118** (and biasing springs **132**), contact connectors **128**, and carrier cover **176**.

FIG. **3** is an elevational view of the track **108** (and its track conductors **116**) with the insert **124** and contact carrier **126** installed, shown sectioned so that the contact between the track conductors **116** and trolley contacts **118**, and the complementary shaping of the upper contact covers **136** and the interior of the track **108**, are visible.

FIG. **4** is a partially exploded perspective view of the patient lift **100** of FIG. **1** installed in a moving-track system wherein the (lower) track **108** is provided on a track trolley **148**, with the track trolley traveling along an upper track **150**, so that the hoist **102** can move in two dimensions (in both the direction of the lower track **108** and the direction of the upper track **150**).

DETAILED DESCRIPTION OF PREFERRED VERSIONS OF THE INVENTION

Expanding on the discussion above, the hoist **102** and track **108** illustrated throughout the drawings are adapted from the

KWIKtrack and hoist system of BHM Medical Inc. (Magog, QC, Canada), which is available with a number of different track and hoist configurations. The exemplary track **108** illustrated throughout the drawings is configured similarly to a pair of C-channels which are joined with their mouths facing in opposing directions, as best seen in FIG. **3**. Usefully, some versions of the KWIKtrack track, already include the connection grooves **146**, which can be used to receive the connection tongues **144** of the track conductors **116** as previously described. Thus, the track **148** is readily constructed by simply installing the track conductors **116** therein. Once the track conductors **116** are installed within the track **108**, the hoist trolley **106** may be installed on the track **108** by slipping the hoist trolley **106** between the track sides **110** (as illustrated in FIG. **1**). At the same time, the trolley contacts **118** may be biased inwardly against the force of the springs **132** (best in seen in FIGS. **2-3**) so that the trolley contacts **118** fit within the conductor grooves **134**, and so that the upper contact covers **136** and lower contact covers **142** are situated on the opposing upper and lower sides of the track floor **112**. FIG. **1** also illustrates a stopping mechanism **160** which may be fit within the track sides **110** at the end of the track **108**, with the stopping mechanism **160** bearing a contact switch or other means for detecting when the hoist trolley **106** reaches or approaches the end of the track **108** (and thereby triggers the stopping mechanism **160**). An end cap **162** which may be fixed to the end of the track **108** to close it is also shown.

The hoist trolley **106** illustrated in FIG. **1** is shown as being of a type wherein four wheels **164** drive the hoist trolley **106** along the track **108**, with the wheels **164** being driven by an appropriate drive situated on or within the hoist **102** to have wheels **164** roll along the track floor **112**. However, it should be understood that any number of drive wheels **164** (or pinions or other drive mechanisms) could be used instead, and/or that these drive mechanisms might engage one or more of the track walls **114** rather than one or both sides of the track floors **112**. It is also possible that the hoist trolley might be driven along the track **108** by a belt, cable, or other drive rather than being driven by the wheels **164**.

Looking particularly to FIG. **2**, the contact carrier channel **122** is provided within the insert **124**, which in turn fits into the hoist trolley **106** (as seen in FIG. **1**). As FIG. **1** illustrates, the insert **124** bears a clip **166** for restraining the leads extending from the hoist **102** to the hoist connectors **130**, and for allowing one of these leads to pass from one side of the hoist trolley **106** to the other via a passage **168**. A bolt hole **170** (see FIG. **2**) allows insertion of a fastener to affix the insert **124** to the hoist trolley **106**. The insert **124** is not required, and the contact carrier channel **122** might instead be situated directly within the hoist trolley **106**, but use of the insert **124** can assist in manufacturing, installation, and maintenance.

As illustrated in FIG. **2**, the contact carrier **126** is formed in several parts which are readily fit together to construct the contact carrier **126**: a lower carrier portion **172** which bears the lower contact covers **142**, and which slidably receives the trolley contacts **118** and their springs **132**; an upper carrier portion **174** which also slidably receives the trolley contacts **118** therein, with the springs **132** biasing the trolley contacts **118** outwardly through apertures defined between the lower carrier portion **172** and upper carrier portion **174**; the contact connectors **128**, which extend upwardly from a conductive connection with the springs **132** and trolley contacts **118** so that the hoist connectors **130** (FIG. **1**) may be fit thereover; and a carrier cover **176** which snap-fits into the upper carrier portion **174** to better prevent detritus from falling into the contact carrier **126**. The assembled contact carrier **126** may then be seen (in cross-section) installed within the track **108** in FIG. **3**. The trolley contacts **118** may be formed similarly to brushes found in DC motors and similar devices, with preferred versions of the invention using copper-graphite trolley contacts **118** in communication with copper contact connectors **128** and springs **132**. The springs **132** need not be conductive, and the trolley contacts **118** may communicate with the contact connectors **128** via wires.

Turning to FIG. **4**, the hoist **102** (with its associated hoist trolley **106** and contact carrier **126**) fides along the lower track **108** in the manner described above. As previously discussed, the track conductors **116** of the lower track **108** are supplied with power from a stationary contact carrier **154** situated near the end of the track **108**, between the stopping mechanism **160** and the endcap **162**. Lead connectors **178** fit over the contact connectors **180** of the stationary contact carrier **154** so chat the stationary contact carrier **154** may receive power via leads **182** from the mobile contact carrier **156** within the track trolley **148**. The track trolley **148** functions to drive the connected lower track **108** along the upper track **150** similar to the manner in which the hoist trolley **106** drives the hoist **102** along the lower track **108**. The contact carrier **156** of the track trolley **148** communicates with the track conductors **152** in the upper track to carry power from a power source, with the power source communicating with the upper track conductors **152** via stationary contact carrier **158**.

The stationary contact carrier **154** of the lower track **108** is shown communicating with the trolley contact carrier **156** via leads **182** since it is contemplated that the track trolley **148** will only travel across the upper track **150**, with the lower track **108** remaining fixed to the track trolley **148** in the position shown. However, it is also possible to have the lower track **108** travel along the track trolley **148**, so long as the lower portion of the track trolley **148** (the portion situated within the upper channel of the track **108**) is appropriately configured (e.g., if configured similarly to the hoist trolley **106**). In this case, it would be inconvenient to include the leads **182** since these would serve as an umbilical tether which restricts the movement of the lower track **108** on the lower portion of the track trolley **148**. It would instead be preferable to have the leads **182** extend from the stationary contact carrier **154** in the lower channel of the lower track **108** to a similar stationary contact carrier situated in the upper channel of the lower track **108**, so that power is communicated between the track conductors **116** of the lower channel of the lower crack **108** to the track conductors (not shown) of the upper channel of the lower track **108**. A contact carrier on the lower portion of the track trolley **148** (the portion riding within the upper channel of the lower track **108**) can then be provided in conductive communication with the track trolley contact carrier **156**. Thus, power can be communicated from the power source, to the upper track stationary contact carrier **158**, to the upper track conductors **152**, to the upper track trolley Contact carrier **156**, to the lower track trolley contact carrier (not shown), to the track conductors (not shown) in the upper channel of the track **108** and to their stationary contact carrier (not shown), then to the lower stationary contact carrier **154** provided in the lower channel of the track **108**, and finally to the track conductors **116** of the lower track **108**, the hoist trolley **106**, and the hoist **102**.

The invention is usable to provide power to the hoist **102** regardless of the hoist's location along a track **108** (or tracks **108/150**), whether for the purpose of charging batteries within the hoist **102** or for simply directly powering the hoist **102** (and/or any drive system for driving the hoist trolley **106** along the track **108**).

It is notable that owing to the use of a contact connection which engages track conductors **116** regardless of variations

in the relative positions of the track **108** and the hoist trolley **106**, and/or regardless of variations in the spacing of the track sides **110**, the invention may be usable with flexible or articulated tracks—that is, tracks which are bendable so that they may be oriented as desired. Consider, for example, a track **108** made of semi-flexible plastic material rather than metal or rigid plastic, whereby the track **108** may be curved as needed and affixed to a ceiling or other support. Bending such a track **108** would tend to cause variations in the spacing between the track sides **110** (and thus variations in the location of the track conductors **116**), thereby making it difficult to ensure conductive contact as the hoist trolley **106** travels along the track **108**. However, the exemplary version of the invention described above can accommodate such variations since its contact carrier **126** will move to fit track variations, and its elastically-biased contacts **118** will work to maintain contact with the track conductors **116**.

The various components described above may be made of any suitable materials. Preferably, the contact carrier **126** is made of plastic (for insulating purposes), whereas the hoist trolley **106** and track **108** are made of metal for strength and durability. The track conductors **116** are then preferably formed of conductive strips coextruded within plastic sheaths, with these sheaths bearing the connection tongues **144** for attachment within the connection grooves **146** in the track sides **110** so that the track conductors **116** are insulated from the (metal) track **108** and its track sides **110**. While not preferred, it is possible for a metal track **108** to serve as one of the track conductors **116**.

It should be understood that the contact arrangements discussed above are merely exemplary, and other arrangements are possible. For example, the track conductors **116** might be provided on one of the track sides **110**—e.g., with one situated below the other—and the trolley contacts **118** might then be biased outwardly from one side of the contact carrier **126** to conductively engage the track conductors **116**. The trolley contacts **118** can also be aligned to engage track conductors **116** situated on horizontal or vertical surfaces of the track sides **110**, either within or outside the channels formed within the track **108**. In any case, the displaceable contact carrier **126**, and/or the spring-biased trolley contacts **118**, can assist in maintaining conductive communication between the trolley **106** and the track conductors **116**.

It should also be understood that the versions of the invention described above are merely exemplary, and the invention is not intended to be limited to these versions. The invention may assume forms which have appearances, components, uses, and functions which are vastly different than those noted above; for example, the invention might be utilized with tracks having configurations different from the one shown. As another example, the invention might be implemented in the patient lifts of the patents and publications noted at the outset of this document or features of those patient lifts might be incorporated into versions of this invention. Thus, the scope of rights to the invention is limited only by the claims set out below, with the invention encompassing all different versions that fall literally or equivalently within the scope of these claims.

What is claimed is:

1. A patient lift including:

a. a hoist, the hoist including an electrically-actuated lifting member movable between raised and lowered states;

b. a hoist trolley attached to the hoist, the hoist trolley including;

(1) opposing trolley sides oriented toward the track sides, and

(2) a contact carrier fit within the hoist trolley to laterally extend between the trolley sides, with the contact carrier:

i. being laterally displaceable within the hoist trolley, and

ii. including trolley contacts situated thereon;

c. a track having opposing spaced track sides;

(1) wherein at least a portion of the hoist trolley rides between the track sides, and

(2) each bearing a track conductor;

wherein the trolley contacts are biased outwardly from the hoist trolley into contact with the track conductors, the trolley contacts being in electrical communication with the hoist, whereby electricity borne by the track conductors is communicated to the trolley contacts and in turn to the hoist.

2. The patient lift of claim **1** wherein the contact carrier rests within a contact carrier channel extending between opposing sides of the hoist trolley, wherein the bounds of the contact carrier within the contact carrier channel are smaller than the bounds of the contact carrier channel, whereby the contact carrier is displaceably fit within the contact carrier channel.

3. The patient lift of claim **1** further including upper contact covers extending outwardly from the hoist trolley above the trolley contacts, wherein the upper contact cover rides above and closely adjacent to the track sides.

4. The patient lift of claim **3** wherein:

a. each track side includes:

(1) an elongated track floor, the floor being oriented at least substantially horizontally, and

(2) an elongated track wall extending upwardly from the track floor,

b. each upper contact cover includes:

(1) a first upper contact cover portion extending outwardly from the hoist trolley above and closely adjacent to one of the track floors, and

(2) a second upper contact cover portion extending upwardly from the first upper contact cover portion closely adjacent to one of the track walls.

5. The patient lift of claim **3** further including lower contact covers extending outwardly from the hoist trolley below the trolley contacts, wherein each lower contact cover rides below and closely adjacent to one of the track floors.

6. The patient lift of claim **1**:

a. wherein the track is a lower track;

b. further including an upper track whereupon the lower track rides, the upper track bearing an upper track conductor in electrical communication with the track conductors of the lower track.

7. The patient lift of claim **1** wherein:

a. each track conductor is situated within a conductor groove in its track side, and

b. each trolley contact extends within a conductor groove to contact one of the track conductors.

8. The patient lift of claim **1** wherein:

a. each track conductor bears a protruding connection tongue, and

b. each track side bears a connection groove, with the connection tongue being removably fit within the connection groove.

9. The patient lift of claim **1** wherein:

a. each track side includes:

(1) an elongated track floor, the floor being oriented at least substantially horizontally, and

(2) an elongated track wall extending upwardly from the track floor,

b. the trolley contacts extend outwardly from the contact carrier onto track conductors situated on the track floor.

10. A patient lift including:

a. a hoist, the hoist including an electrically-actuated lifting member movable between raised and lowered states;

b. a hoist trolley attached to the hoist, the hoist trolley having:

(1) opposing right and left trolley sides;

(2) a contact carrier channel extending between the right and left trolley sides;

(3) a contact carrier fit within the contact carrier channel, the contact carrier including a trolley contact extending therefrom, wherein:

(a) the trolley contact is in electrical communication with the hoist, and

(b) the contact carrier is translatable rightwardly and leftwardly within the contact carrier channel.

11. The patient lift of claim **10**:

a. further including a track:

(1) whereupon the hoist trolley rides, and

(2) having opposing spaced track sides, at least one track side bearing a track conductor,

b. wherein the contact carrier rides between the track sides with the trolley contact in contact with the track conductor.

12. The patient lift of claim **11**:

a. wherein the track is a lower track;

b. further including an upper track whereupon the lower track rides, the upper track bearing an upper track conductor in electrical communication with the track conductor of the lower track.

13. The patient lift of claim **10** wherein the contact carrier is also translatable upwardly and downwardly within the contact carrier channel.

14. The patient lift of claim **10** wherein the trolley contact is elastically biased outwardly from the contact carrier.

15. The patient lift of claim **10**:

a. wherein the contact carrier includes:

(1) upper contact covers extending outwardly therefrom above the trolley contact,

(2) lower contact covers extending outwardly therefrom below the trolley contact,

b. further including a track:

(1) whereupon the hoist trolley rides, and

(2) having opposing spaced track sides, at least one track side bearing a crack conductor, wherein,

(a) the upper contact covers ride above and closely adjacent to the track sides, and

(b) the lower contact covers ride below and closely adjacent to the track sides.

16. A patient lift including:

a. a hoist, the hoist including an electrically-actuated lifting member movable between raised and lowered states;

b. a track having apposing spaced track sides, each bearing a track conductor,

c. a contact carrier having opposing contact carrier sides, each contact carrier side including:

(1) an upper contact cover extending outwardly from the contact carrier side, wherein the upper contact cover tides above and closely adjacent to one of the track sides;

(2) a lower contact cover extending outwardly from the contact carrier side, wherein the lower contact cover tides below and closely adjacent to one of the track sides;

(3) a trolley contact extending outwardly from the contact carrier side, the trolley contact:

(a) being situated below the upper contact cover and above the lower contact cover, and

(b) being connected in electrical communication between the hoist and one of the track conductors,

wherein the contact carrier sides are:

i. restrained to, but

ii. displaceable in at least one dimension with respect to, the hoist.

17. The patient lift of claim **16** further including a trolley:

a. affixed to the hoist,

b. riding between the opposing track sides, and

c. having the contact carrier displaceably mounted therein.

18. The patient lift of claim **17** wherein the contact carrier is both horizontally and vertically displaceable with respect to the trolley.

19. The patient lift of claim **16** wherein the trolley contacts are elastically biased outwardly from the contact carrier sides.

20. The patient lift of claim **16** wherein:

a. each track side includes:

(1) an elongated track floor, the floor being oriented at least substantially horizontally, and

(2) an elongated track wall extending upwardly from the track floor,

b. each upper contact cover includes:

(1) a first upper contact cover portion extending outwardly from the hoist trolley above and closely adjacent to one of track floors, and

(2) a second upper contact cover portion extending upwardly from the first upper contact cover portion closely adjacent to one of the track walls.

21. The patient lift of claim **16**:

a. wherein the track is a lower track;

b. further including an upper track whereupon the lower track rides, the upper track bearing an upper track conductor in electrical communication with the track conductors of the lower track.

22. The patient lift of claim **16** wherein:

a. each track conductor is situated within a conductor groove in its track side, and

b. each trolley contact extends within a conductor groove to contact one of the track conductors.

23. The patient lift of claim **16** wherein:

a. each track side includes:

(1) an elongated track floor, the floor being oriented at least substantially horizontally, and

(2) an elongated track wall extending upwardly from the track floor,

b. the trolley contacts extend outwardly from the contact carrier sides onto track conductors situated on the track floor.

* * * * *