IN THE UNITED STATES DISTRICT COURT
FOR THE DISTRICT OF DELAWARE

PERCEPT TECHNOLOGIES, INC., Plaintiff, v. MAGIC LEAP, INC., Defendant.	**No. 1:22-cv-0025-RGA**

PLAINTIFF'S REPLY CLAIM CONSTRUCTION BRIEF

Under Paragraph 8 of the Scheduling Order in this case (Dkt. 14), Plaintiff Percept Technologies, Inc. ("Plaintiff") hereby provides its reply claim construction brief.

TABLE OF CONTENTS

I. AGREED-UPON CONSTRUCTIONS 1

II. DISPUTED CONSTRUCTIONS 2

III. ARGUMENT 3

A. "media focals" ('929 Patent) 3

B. "optical/perceptual parameter based operating system" ('113 Patent) 6

C. "the eye sensor activating the circuitry responsive to eye motion of a user" ('929 Patent) 8

D. "dynamic eye tracking mechanism" ('113 Patent) 10

CONCLUSION 11

TABLE OF AUTHORITIES

Cases

Akamai Techs., Inc. v. Limelight Networks, Inc.,
805 F.3d 1368 (Fed. Cir. 2015) 11

Chervon (HK) Ltd. v. One World Techs., Inc.,
No. 19-1293-LPS, 2020 U.S. Dist. LEXIS 209085 (D. Del. Nov. 9, 2020)..... 6

Ecolab, Inc. v. FMC Corp.,
569 F.3d 1335 (Fed. Cir. 2009) 9, 10

Markman v. Westview Instruments, Inc.,
52 F.3d 967 (Fed. Cir. 1995) 10

MASS Engineered Design, Inc. v. Ergotron, Inc.,
250 F.R.D. 284 (E.D. Tex. 2008) 11

Opticurrent, LLC v. Power Integrations, Inc.,
No. 2021-1712, 2022 U.S. App. LEXIS 4771 (Fed. Cir. Feb. 23, 2022) 7

Shire Dev. LLC v. Teva Pharm. USA, Inc.,
Civil Action No. 1:17-cv-01696-RGA, 2019 U.S. Dist. LEXIS 31753
(D. Del. Feb. 28, 2019) 4

Slot Speaker Techs., Inc. v. Apple, Inc.,
No. 13-cv-01161-HSG, 2018 U.S. Dist. LEXIS 50939 (N.D. Cal. Mar. 27, 2018) 11

Telecom Ltd. v. Samsung Elecs. Co.,
215 F.3d 1281 (Fed. Cir. 2000) 9

I. AGREED-UPON CONSTRUCTIONS

The parties have agreed on the constructions of the following terms.[1]

Claim Term	Agreed Construction
"dynamic eye tracking mechanism" ('113 Patent: claims 1, 12)	mechanism for dynamically tracking the characteristics of the eye, including, for example, ciliary, pupil, corneal, retina, lens, iris, or eye lid measurements, blinks, squints, gaze direction, or eye movement[2]
"a lens" ('929 Patent: claims 7, 10; '113 Patent: claims 1, 12)	plain and ordinary meaning
"cell phone" ('929 Patent: claim 7)	plain and ordinary meaning
"MP3 player" ('929 Patent: claim 7)	plain and ordinary meaning

[1] Defendant agreed to Plaintiff's proposed constructions for "a lens," "cell phone," and "MP3 player" in Defendant's Answering Brief.

[2] Although Defendant previously agreed to this construction for "dynamic eye tracking mechanism," Defendant now seeks in its Answering Brief to "reserve the right to argue" that the term is a means-plus-function limitation under § 112(6). This is improper, as detailed below.

II. DISPUTED CONSTRUCTIONS

The parties still dispute the constructions of the following terms.

Claim Term	Plaintiff's Proposed Construction	Defendant's Proposed Construction
"media focals" ('929 Patent: claim 7)	utilizing the eyewear for its intended purpose and enhancing that use by using imaging techniques to improve the vision of the user (*e.g.,* '929 Patent: Abstract; 1:51-53; 2:25-27)	circuitry that uses imaging techniques to improve the vision of the user (*e.g.*, '929 patent at Abstract, 1:51-53, 2:25-27, 2:39-47, Fig. 1)
"optical/perceptual parameter based operating system" ('113 Patent: claims 1, 12)	plain and ordinary meaning (*e.g.*, '113 Patent: Figure 19; 8:13-26; 12:31-35; 13:14-25)	operating system, not including a conventional mobile operating system such as Android or iOS, in which optical parameters and perceptual parameters are measured and used as inputs, controls, or feedback elements (*e.g.*, '113 patent at 7:1-6, 8:13-24, 13:21-25, 14:1-11; Oct. 10, 2013 Non-Final Office Action response at 7-9; Oct. 10, 2013 Applicant-Initiated Interview Summary)
"the eye sensor activating the circuitry responsive to eye motion of a user" ('929 Patent: claims 7, 10)	plain and ordinary meaning (*e.g.*, '929 Patent: 3:4-27; 3:36-43)	the eye sensor making the inactive circuitry become active, in response to eye motion of a user (*e.g.*, '929 patent at 3:23-25; U.S. Patent Appl. No. 11/245,756, Nov. 2, 2007 Final Office Action response at 6-10)

III. ARGUMENT

The parties have narrowed their claim construction dispute to the construction of three terms in the ’113 and ’929 Patents. Defendant’s Answering Brief makes clear that its proposed constructions for these remaining terms are nothing more than non-infringement arguments masquerading as definitions. The Court should reject Defendant’s litigation-driven proposed constructions. *See* citations in Pl.’s Opening Br., at 4. Plaintiff’s proposed constructions, on the other hand, strictly adhere to the intrinsic evidence, irrespective of features of the infringing product.

Additionally, Defendant cannot renege on the parties’ agreed construction for the term “dynamic eye tracking mechanism.” The parties’ agreed construction did not define this term as a means-plus-function term. Defendant should not be permitted to argue for a different construction going forward.

A. “media focals” (’929 Patent)

Defendant’s proposed construction for “media focals” is a litigation-driven construction that attempts to unduly limit the claim to require that the circuitry that provides media focals be located entirely within the frame member of the eyewear. This construction is not consistent with the words of the claim, nor any of the other intrinsic evidence, and should be rejected. By contrast, Plaintiff’s proposed construction comes directly from the patentee’s explicit definition of the term in the specification:

> Media focals, that is, <u>utilizing the eyewear for its intended purpose and enhancing that use by using imaging techniques to improve the vision of the user</u>.

’929 Patent, 1:51-53 (emphasis added). *See* citations in Pl.’s Opening Br., at 5. The patentee’s explicit definition should control even if it is grammatically awkward. *See Shire Dev. LLC v. Teva Pharm. USA, Inc.*, Civil Action No. 1:17-cv-01696-RGA, 2019 U.S. Dist. LEXIS 31753, at *9 (D.

Del. Feb. 28, 2019) ("[T]he claim construction inquiry, as described in *Markman* and *Philips*, is not hamstrung by the rigidities of English grammar.").

Defendant offers scant support for its construction of media focals as circuitry. First, defendant points to a portion of the specification describing one embodiment of the invention and explaining that "through the use of the circuitry 106 within the wearable optics it is actually a media focal." Def.'s Answering Br., at 4. But reading this isolated portion in context provides more clarity:

> FIG. 1 is a diagram that illustrates Media focals 100. Media focals 100 comprises an information bar 102, receiver 104, digital circuitry 106, frames 108 and lens 110. Media focals 100 allow for enhancing the wearable optics for its primary purpose, for example, a digital camera could be placed within the wearable optics to allow for seeing certain of these images. For example, the circuitry 106 for the media focals 100 could be placed within the frame 108 of the wearable optics. The lens 110 could have a totally reflective surface, or a partially reflective surface using LCDs or the like. In effect the wearable optics could look like see-through glasses, but through the use of the circuitry 106 within the wearable optics it is actually a media focal.

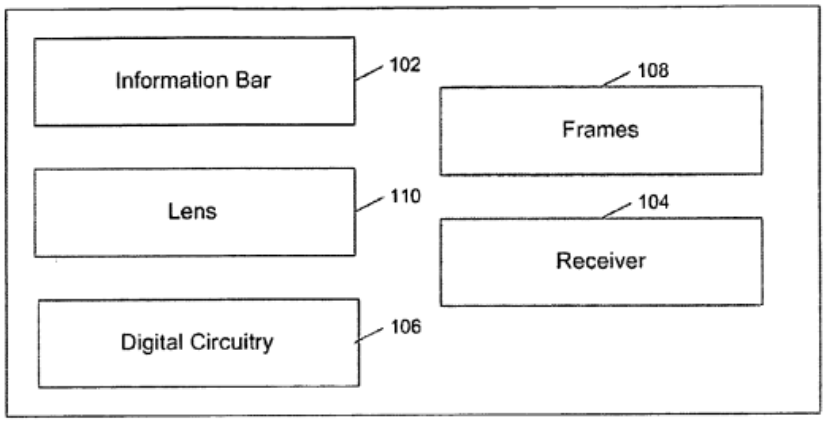

100

Figure 1

’929 Patent, Figure 1, 2:40-51 (emphasis added). This portion refers to the “wearable optics” as a whole as a media focal because of the function it provides – “enhancing the wearable optics for its primary purpose.” This function is in line with Plaintiff’s proposed construction. The portion does not refer to a media focal as separate circuitry within the wearable optics.

Second, Defendant attempts to discredit the patentee’s definition. Defendant argues that defining “media focals” to include the functions of both “utilizing” and “enhancing” would create vagueness and confuse the jury. *See* Def.’s Answering Br., at 4-5. However, in the context of the ’929 Patent, there is nothing confusing about the patentee’s definition. The first part of the patentee’s definition specifies “utilizing the eyewear for its intended purpose.” Using eyewear for its intended purposes is not a vague or confusing concept that would be difficult for a jury to understand. The ’929 Patent specification even describes a few basic examples, including to improve a person’s vision for reading and to protect a person’s eyes. ’929 Patent, 1:29–32. Likewise, the second part of the patentee’s definition of “enhancing that use by using imaging techniques to improve the vision of the user” specifically explains how the use must be enhanced, *i.e.*, by “using imaging techniques to improve the vision of the user.” This also would be readily understood by a jury.

Third, Defendant further attempts to discredit the patentee’s definition by arguing that the patentee opted not to include language in the claims that would permit more than just “circuitry within the frame member” of eyewear. Def.’s Answering Br., at 5-6. Defendant claims that Plaintiff intends to argue that “‘circuitry within the frame member’ of eyewear . . . can be applied to circuitry that is not within the frame member at all.” *Id.* Defendant misstates Plaintiff’s position. Plaintiff does not assert that “circuitry within the frame member” can include circuitry separate from the eyewear. Plaintiff’s position is that the claims require that the “circuitry within the frame

member" of the eyewear "provides" media focals. The claims are, however, agnostic as to whether the media focals provided by the circuitry within the frame member are processed using circuitry on the eyewear itself or external to the eyewear. Indeed, the patentee states only that they "could be" placed within the frame of the eyewear. '929 Patent, 2:45-47. Had the patentee intended for "media focals" to refer to circuitry located *entirely* within the frame member, the patentee would have written the claim using "comprises" or "includes" rather than "provides."

Defendant's proposed construction for "media focals" should be rejected because (a) it rejects the patentee's express definition, and (b) it is plainly intended to manufacture a non-infringement argument based on Defendant's use of "Lightpack" belt packs in its products to assist with computer processing.

B. "optical/perceptual parameter based operating system" ('113 Patent)

Defendant's proposed construction for the term "optical/perceptual parameter based operating system" is another litigation-driven construction that attempts to limit the claim in two major ways. First, Defendant argues that the term should include a negative limitation excluding conventional mobile operating systems, such as Android and iOS. *See* Def.'s Answering Br., at 9-10. Negative limitations are generally disfavored absent explicit disavowal. *Chervon (HK) Ltd. v. One World Techs., Inc.*, No. 19-1293-LPS, 2020 U.S. Dist. LEXIS 209085, at *11-12 (D. Del. Nov. 9, 2020). It should come as no surprise to the Court that Defendant's accused headsets are based on Android. *See* Pl.'s Opening Br., at 10. But Android and iOS operating systems today are far different from the versions that existed at the time of the invention. Recent versions may be based on optical/perceptual parameters. Defendant's proposed construction would unnecessarily add ambiguity to the claims about whether products with operating systems based on recent or modified versions of Android or iOS are precluded from infringement. Instead, the plain meaning

of the term "optical/perceptual parameter based operating system" perfectly captures the type of operating system used in the claims. There is no need to specify that this term does not include conventional mobile operating systems such as pre-existing Android or iOS mobile operating systems.

Second, Defendant argues that the term must be construed to require both optical and perceptual parameters. However, the patentee made no "clear and unmistakable" disavowal. *See Opticurrent, LLC v. Power Integrations, Inc.*, No. 2021-1712, 2022 U.S. App. LEXIS 4771, at *14 (Fed. Cir. Feb. 23, 2022). Defendant again omits key context from the cited portion of the prosecution history. Contrary to Defendant's suggestion, the patentee made no explicit statement that the addition of "/perceptual" to the claim (as in "optical/perceptual parameter") was intended to limit the claim to require both optical and perceptual parameters to overcome the Bar-Zeev reference. *See* Exhibit C, Amendment in Response to Non-Final Office Action of September 18, 2013, at 7-8. The addition of "/perceptual" merely clarified the scope of the parameters used by the operating system of the patentee's invention. *Id.* In the same response, the patentee offered a separate and independent reason for why Bar-Zeev did not anticipate the invention. The patentee stated that Bar-Zeev "neither discloses nor suggests controlling the wearable optics device by the optical/perceptual parameter based operating system. . . ." *Id*.

Additionally, Defendant omits the patentee's response to a later office action, in which the patentee distinguished over Bar-Zeev for yet another reason. The patentee argued that Bar-Zeev lacked a dynamic eye tracking mechanism utilizing certain "optical parameter measurements," including any of ciliary, pupil, corneal, lens, iris, eye lid, or retina measurements. *See* Exhibit D, Amendment in Response to Final Office Action of November 25, 2013, at 7-8. The examiner credited this response as the reason the claims were allowable, not the previous addition of

"/perceptual" to the claim term. *See* Exhibit E, Notice of Allowance, at 4. Accordingly, Defendant's proposed construction requiring an operating system based on both optical and perceptual parameters is not warranted.

Defendant also argues that its proposed construction is the only one that conveys to the jury what an "optical/perceptual parameter based operating system" is. Defendant faults Plaintiff for only offering attorney argument in support, yet ironically only offers attorney argument in support of its own position. Defendant claims that jurors will not understand this term because it involves "complex and specialized computer software." *See* Def.'s Answering Br., at 8-9. But jurors will not need to understand any of the complexities about how an operating system works. Jurors merely need to be able to understand whether an operating system is based on optical/perceptual parameters. This is not a difficult concept that requires knowledge of complex and specialized computer software, and could certainly be the subject of expert testimony to explain the concept to the jury.

For these reasons, Defendant's narrow construction of an "optical/perceptual parameter based operating system" is not supported by the intrinsic evidence and there is no clear reason to depart from the plain and ordinary meaning.

C. "the eye sensor activating the circuitry responsive to eye motion of a user" ('929 Patent)

The only confusion a jury may have with respect to the meaning of the term "activating" is from Defendant's deliberate attempt to create confusion where none exists and to create a non-infringement argument using impermissible hindsight. Whether or not the circuitry has already been activated makes no difference and does not render the meaning of the term "activating" unclear. This is in accordance with the plain and ordinary meaning of the term, as shown by the dictionary definitions set forth by Plaintiff. *See* Pl.'s Opening Br., at 12. There is no reason to

depart from the plain and ordinary meaning. *See Telecom Ltd. v. Samsung Elecs. Co.*, 215 F.3d 1281 (Fed. Cir. 2000) ("Vagueness and inference cannot overcome an ordinary meaning of a claim term.").

Defendant places much of its focus on a particular statement the patentee made during prosecution of an abandoned parent application U.S. 11/245,756 in a response to a rejection over U.S. 2005/0001981 to Anderson et al. *See* Def.'s Answering Br., at 11-12. In the response, the patentee noted that, in Anderson, "the circuitry must already be activated before the eye sensing device '156' detects eye movement and before the feedback device '158' instructs the fluid dispensers 14, 16 to administer fluid to the user's eye." '756 File History, Oct. 25, 2007, Office Action Response, at 8-9. Defendant relies on this statement to support its position that the circuitry in the patentee's invention must initially be inactive.

Defendant's reliance on this statement from the '756 application prosecution history is misplaced. First, this was not the real distinction that the patentee raised to distinguish Anderson. Reading the *entire* response rather than this isolated portion demonstrates that, in Anderson, the circuitry is activated by controllers that are separate from the circuitry and the eye sensing device. Pl.'s Opening Br., at 13; *see also Ecolab, Inc. v. FMC Corp.*, 569 F.3d 1335, 1342 (Fed. Cir. 2009) ("Even if an isolated statement appears to disclaim subject matter, the prosecution history as a whole may demonstrate that the patentee committed no clear and unmistakable disclaimer."). This is far from speculative guessing, but is the main part of the distinction.

Second, in the following sentence of the response, the patentee adds, "At best, Anderson's disclosure of controllers 28, 30 activate the circuitry." Read together, these two statements prove that Defendant's proposed construction is untenable. The patentee explicitly describes that the

controllers may "activate" the circuitry that the patentee noted in the preceding sentence must already be activated.

Third, there was no disavowal because the examiner expressly rejected the patentee's arguments in an advisory action following the patentee's response. *See* Exhibit F, '756 File History, November 2, 2007, Advisory Action. The examiner reiterated that Anderson disclosed ". . . the eye sensor for activating the circuitry. . ." despite the patentee's argument that this circuitry was already activated. *Id.*; *see also Ecolab*, 569 F.3d at 1342-44 (finding no disavowal where an examiner rejected patentee's allegedly limiting arguments).

Even assuming the prosecution history of the '756 application is relevant, it is not definitive. The prosecution history should be considered along with the claims themselves and the specification. *Markman v. Westview Instruments, Inc.*, 52 F.3d 967, 979 (Fed. Cir. 1995). Here, there is nothing in the claims or specification that supports Defendant's narrow proposed construction.

Defendant has no basis for requiring that the circuitry initially be inactive in its proposed construction. The Court should reject Defendant's litigation-driven proposed construction.

D. "dynamic eye tracking mechanism" ('113 Patent)

During the Claim Construction Issue Identification process specified under Paragraph 7 of the Scheduling Order, the parties agreed to the construction of "dynamic eye tracking mechanism" as a "mechanism for dynamically tracking the characteristics of the eye, including, for example, ciliary, pupil, corneal, retina, lens, iris, or eye lid measurements, blinks, squints, gaze direction, or eye movement," with no further limitations. *See* Joint Claim Construction Chart and Exhibits A and B, emails demonstrating agreement.

Defendant now states that it "reserves the right" to later argue that "dynamic eye tracking mechanism" is a mean-plus-function term subject to § 112(6). *See* Def.'s Answering Br., at 3. But a party has no right to narrow a previously agreed upon construction. *See Slot Speaker Techs., Inc. v. Apple, Inc.*, No. 13-cv-01161-HSG, 2018 U.S. Dist. LEXIS 50939, at *15 n.1 (N.D. Cal. Mar. 27, 2018) ("Where, as here, the parties have agreed to a claim construction, there is no right of one party to further narrow that construction by adding limitations."), citing *Akamai Techs., Inc. v. Limelight Networks, Inc.*, 805 F.3d 1368, 1376 (Fed. Cir. 2015) (same); *see also MASS Engineered Design, Inc. v. Ergotron, Inc.*, 250 F.R.D. 284, 287 (E.D. Tex. 2008) (finding a plaintiff's "'wait-and-see' approach to claim construction" to be "antithetical to the Local Patent Rules"). Neither the agreed construction nor the emails documenting the agreement make any suggestion that "dynamic eye tracking mechanism" is a means-plus-function term. The parties agreed construction should control.

CONCLUSION

For all the foregoing reasons, the Court should adopt Plaintiff's proposed constructions for the disputed terms.

Dated: January 3, 2023

Respectfully submitted,

Percept Technologies, Inc.

/s/ William W. Flachsbart

Rolando Diaz (DE Bar #5845)
Tracy L. Pearson (DE Bar #5652)
DUNLAP BENNETT & LUDWIG PLLC
1509 Gilpin Avenue, Ste.2
Wilmington, DE 19806
Tel: (302) 273-4249
Fax: (855) 223-8791
tpearson@dbllawyers.com
rdiaz@dbllawyers.com

William W. Flachsbart (*pro hac vice*)
Robert P. Greenspoon (*pro hac vice*)
Mark Magas (*pro hac vice*)
DUNLAP BENNETT & LUDWIG PLLC
333 N. Michigan Ave.
Suite 2700
Chicago, IL 60601
Tel: (312) 551-9500
wflachsbart@dbllawyers.com
rgreenspoon@dbllawyers.com
mmagas@dbllawyers.com

Attorneys for Plaintiff
Percept Technologies, Inc.

CERTIFICATE OF SERVICE

The undersigned hereby certifies that on January 3, 2023, a copy of the foregoing document was served on the persons listed below in the manner indicated:

BY EMAIL

Anne Shea Gaza (No. 4093)
Samantha G. Wilson (No. 5816)
YOUNG CONAWAY STARGATT & TAYLOR, LLP
Rodney Square
1000 North King Street
Wilmington, DE 19801
(302) 571-6600
agaza@ycst.com
swilson@ycst.com

Bryan Wilson
MORRISON & FOERSTER LLP
755 Page Mill Road
Palo Alto, CA 94304
(650) 813-5600
bwilson@mofo.com

Diek O. Van Nort
MORRISON & FOERSTER LLP
425 Market Street
San Francisco, CA 94105
(415) 268-7000
dvannort@mofo.com

Attorneys for Defendant Magic Leap, Inc.

DUNLAP BENNET & LUDWIG PLLC

/s/ Rolando Diaz

Tracy L. Pearson (No. 5652)
Rolando Diaz (No. 5845)
1509 Gilpin Avenue, Ste. 2
Wilmington, DE 19806
(302) 273-4249
tpearson@dbllawyers.com
rdiaz@dbllawyers.com

William W. Flachsbart
Robert P. Greenspoon
Mark A. Magas
333 N. Michigan Ave., Suite 2700
Chicago, IL 60601
(312) 551-9500
wflachsbart@dbllawyers.com
mmagas@dbllawyers.com

Attorneys for Plaintiff