US 20090007793A1

(19) United States

(12) Patent Application Publication

Glucksman et al.

(10) Pub. No.: US 2009/0007793 A1

(43) Pub. Date: Jan. 8, 2009

(54) INFUSIBLE MATERIAL CAPSULE FOR BREWING A BEVERAGE

(75) Inventors: **Dov Z. Glucksman**, Danvers, MA (US); **Laura J. Nickerson**, Fitchburg, MA (US); **Gary P. McGonagle**, Lynn, MA (US); **David Normand Belanger**, Peabody, MA (US)

Correspondence Address:
GEORGE A. HERBSTER
40 BEACH STREET, SUITE 303
MANCHESTER, MA 01944 (US)

(73) Assignee: **APPLIANCE DEVELOPMENT CORPORATION**, Danvers, MA (US)

(21) Appl. No.: **11/772,388**

(22) Filed: **Jul. 2, 2007**

Publication Classification

(51) **Int. Cl.**

A47J 31/44	(2006.01)
A47J 31/10	(2006.01)
A47J 31/24	(2006.01)

(52) **U.S. Cl.** ..... **99/287**; 99/295; 99/302 R

(57) **ABSTRACT**

A sealed capsule for use in apparatus including a capsule receiving station and a water delivery system for brewing a hot beverage in which a hot liquid under pressure infuses a material. A capsule base has a concave bottom floor with angularly spaced structural ribs that form channels for directing brewed beverage to a sharpened spout. A collar surrounds the dispensing spout. A foil attaches to the collar to overlie the spout. A filter lies on the structural ribs. Infusible material lies on the filter. A water distribution plate overlies the infusible material. A cover closes the base unit and includes a water inlet. As the capsule seats in the capsule receiving station, the foil seal is forced over the sharpened spout to rupture and enable brewed beverage to be dispersed. A probe of the water delivery system also penetrates the cover to direct water into the capsule without contacting the infusible material or the brewed beverage.

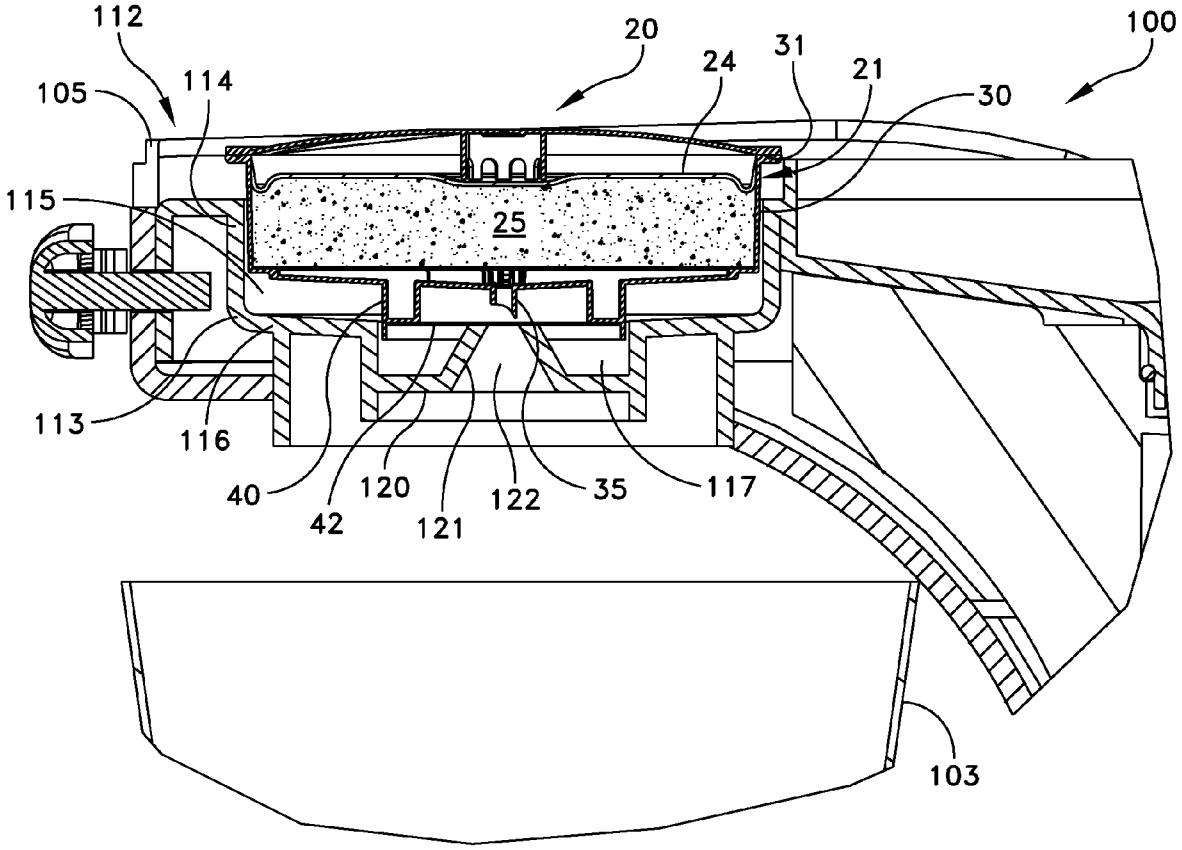

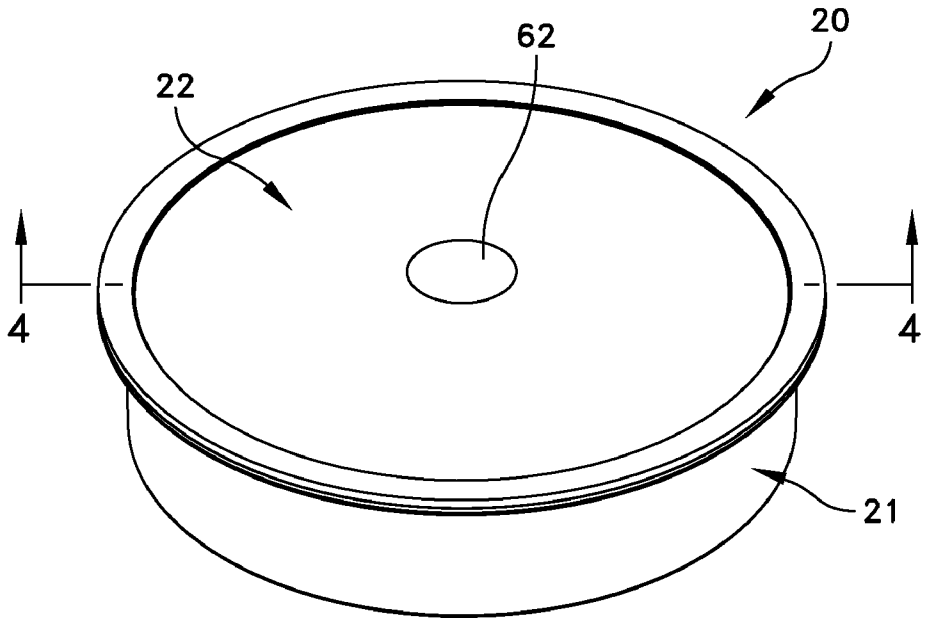

FIG. 1

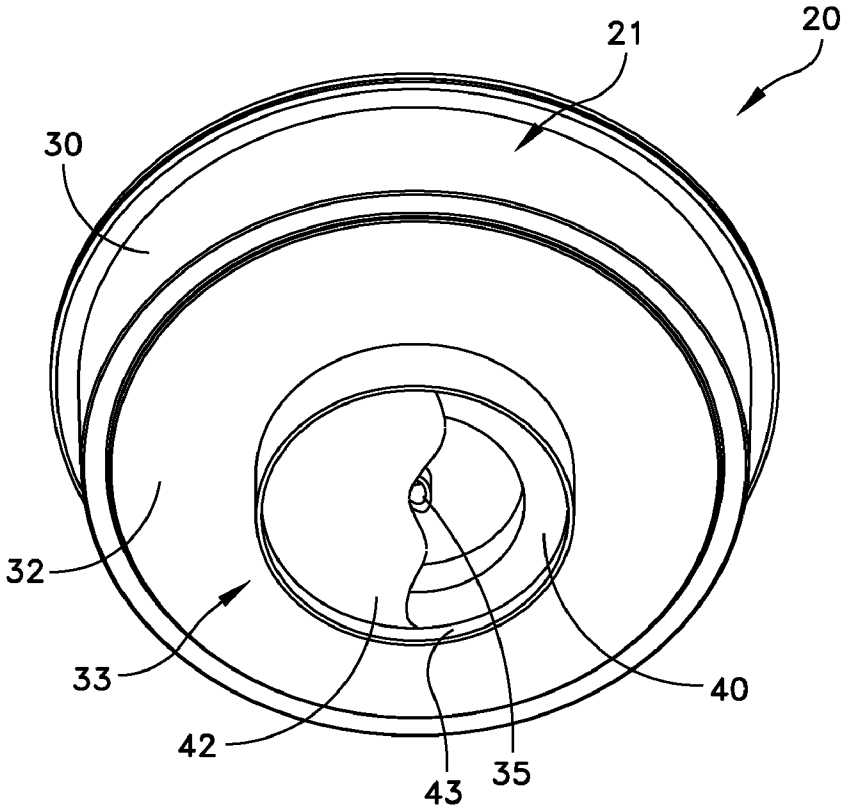

FIG. 2

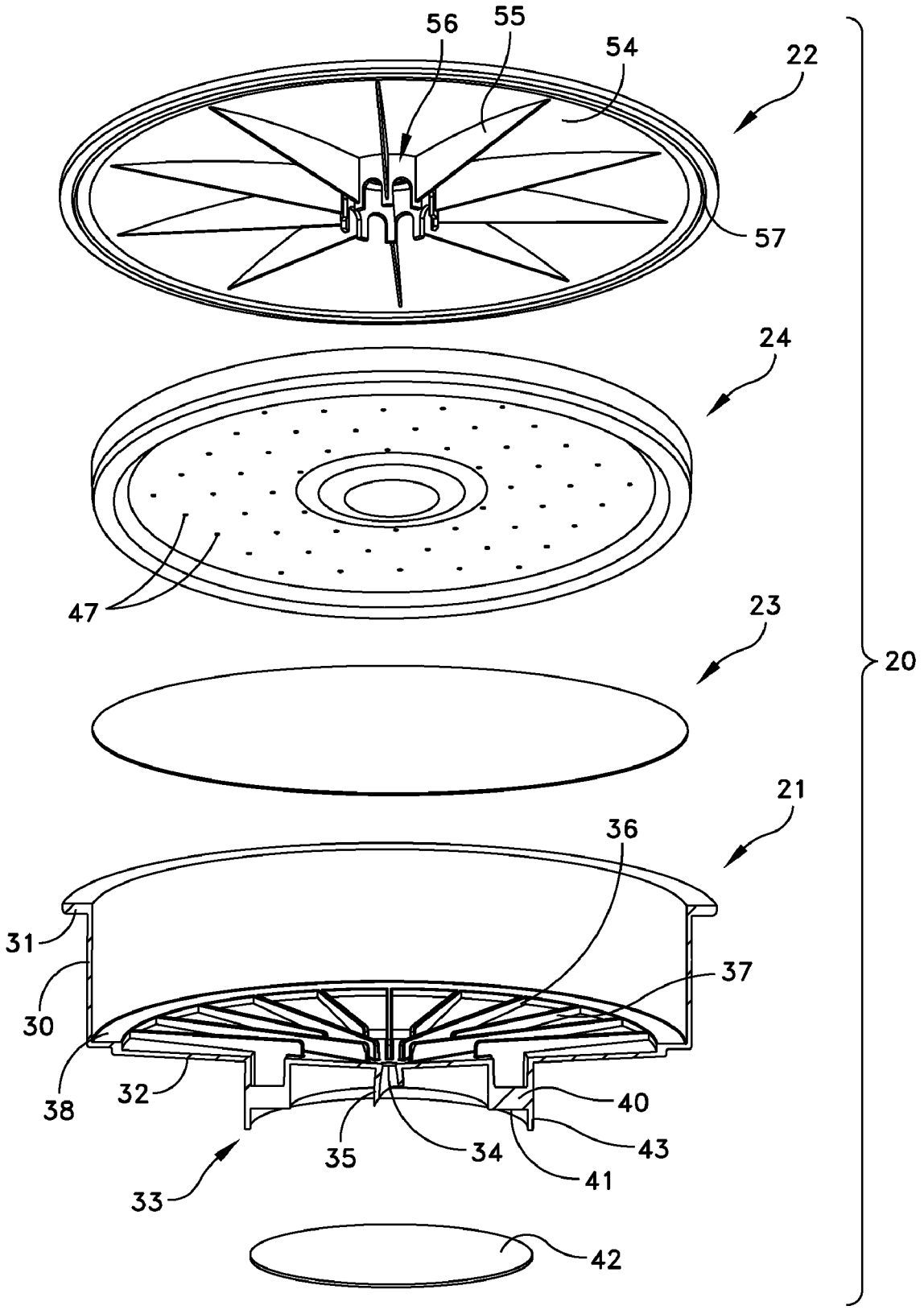

FIG. 3

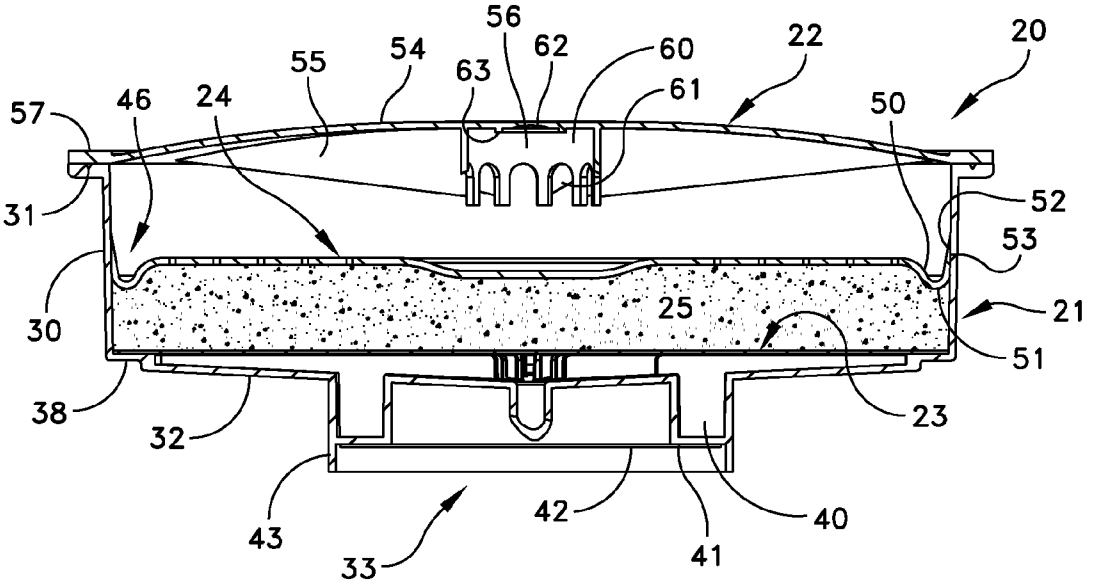
56
62
60
22
20
55
54
63
61
57
46
24
50
31
52
53
30
25
21
51
38
32
23
43
42
40
33
41

FIG. 4

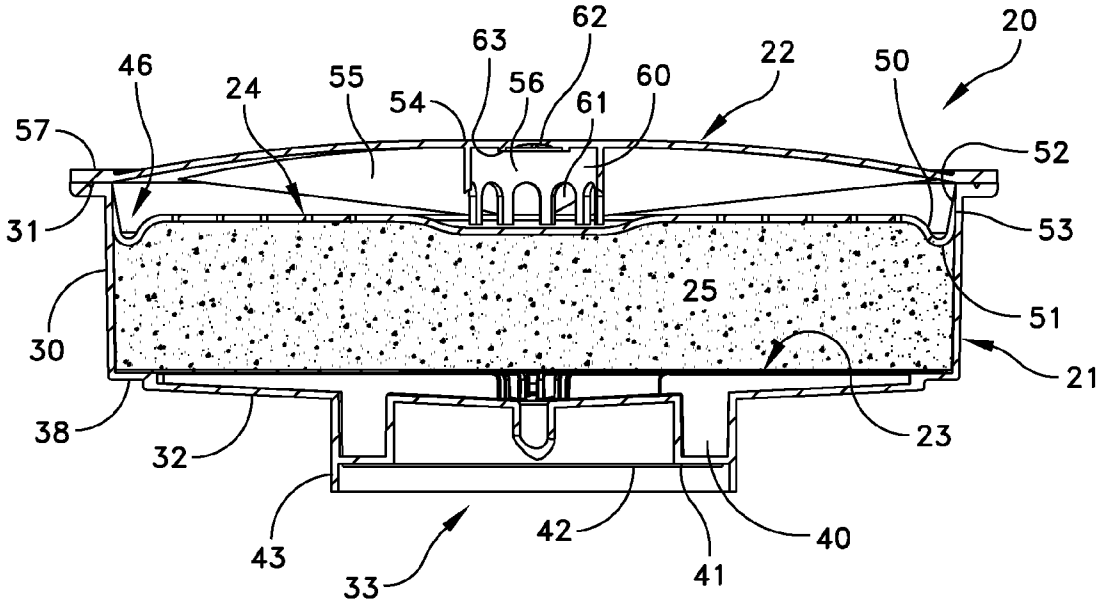
62
20
63
22
46
55
56
60
50
24
54
61
57
52
31
53
25
51
30
21
38
23
32
43
42
40
33
41

FIG. 5

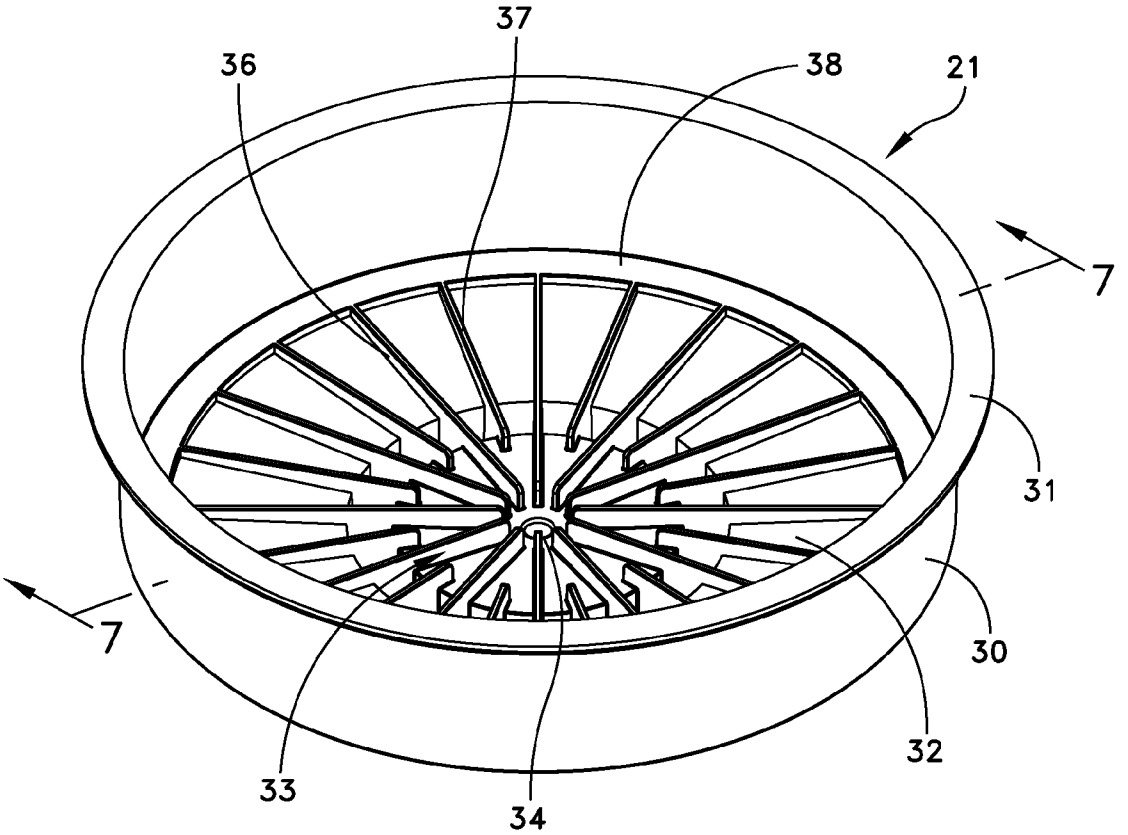

FIG. 6

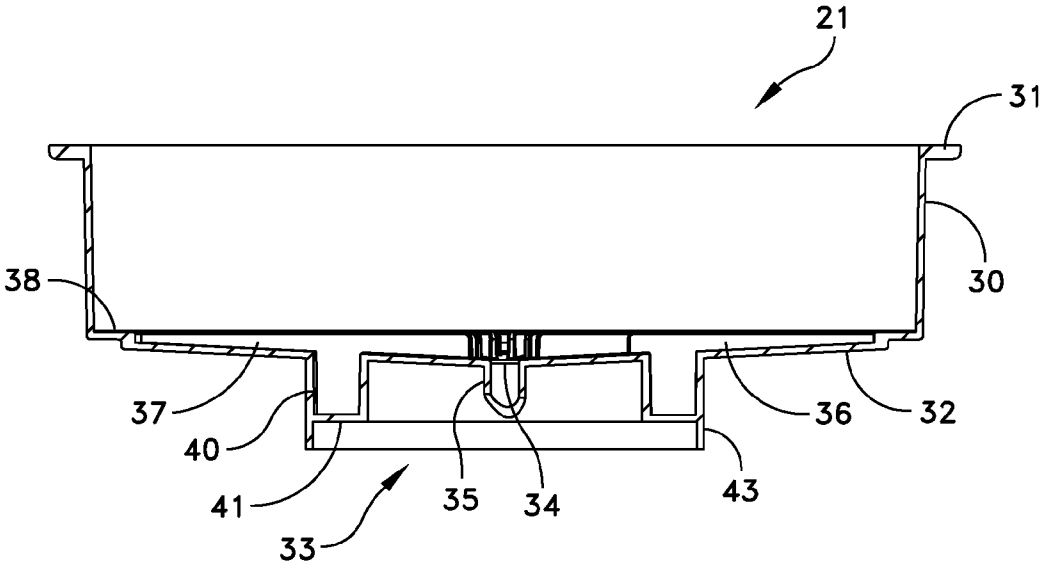

FIG. 7

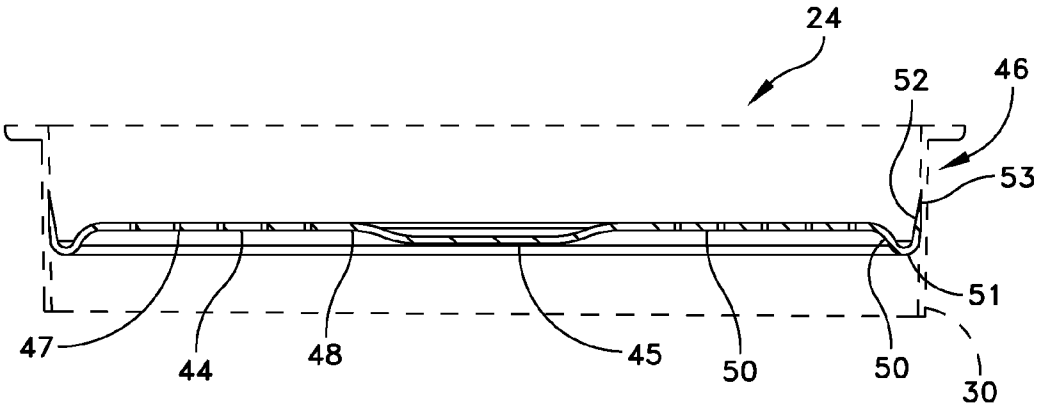

FIG. 8

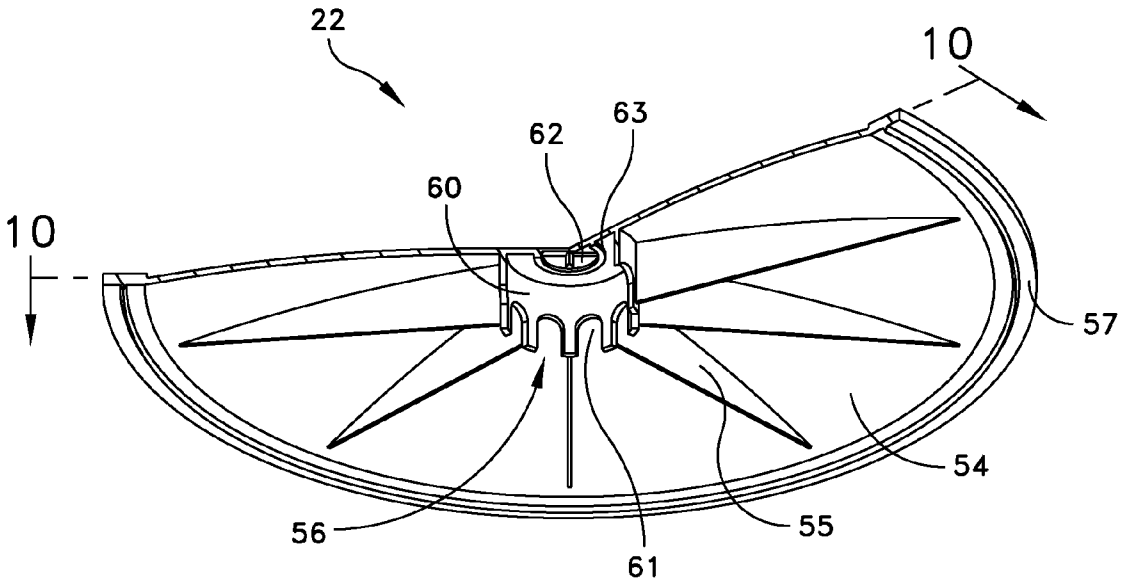

FIG. 9

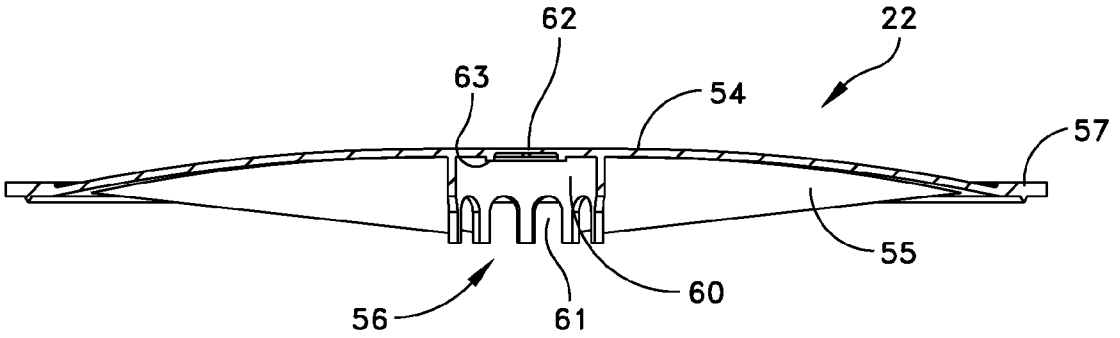

FIG. 10

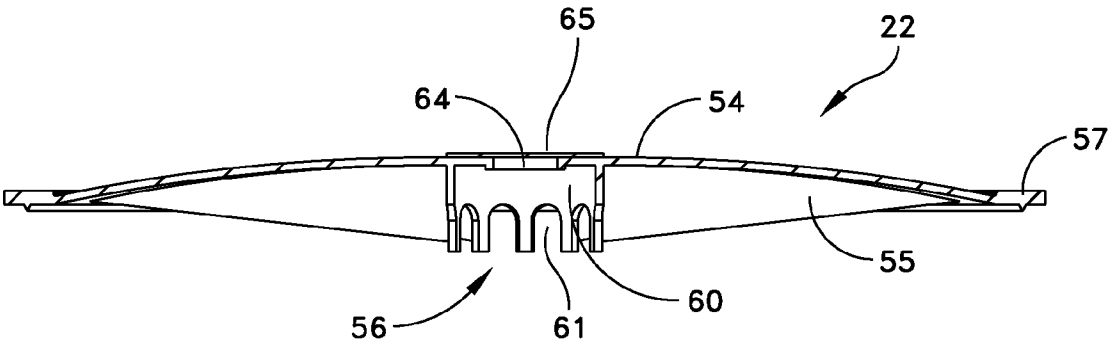

FIG. 11

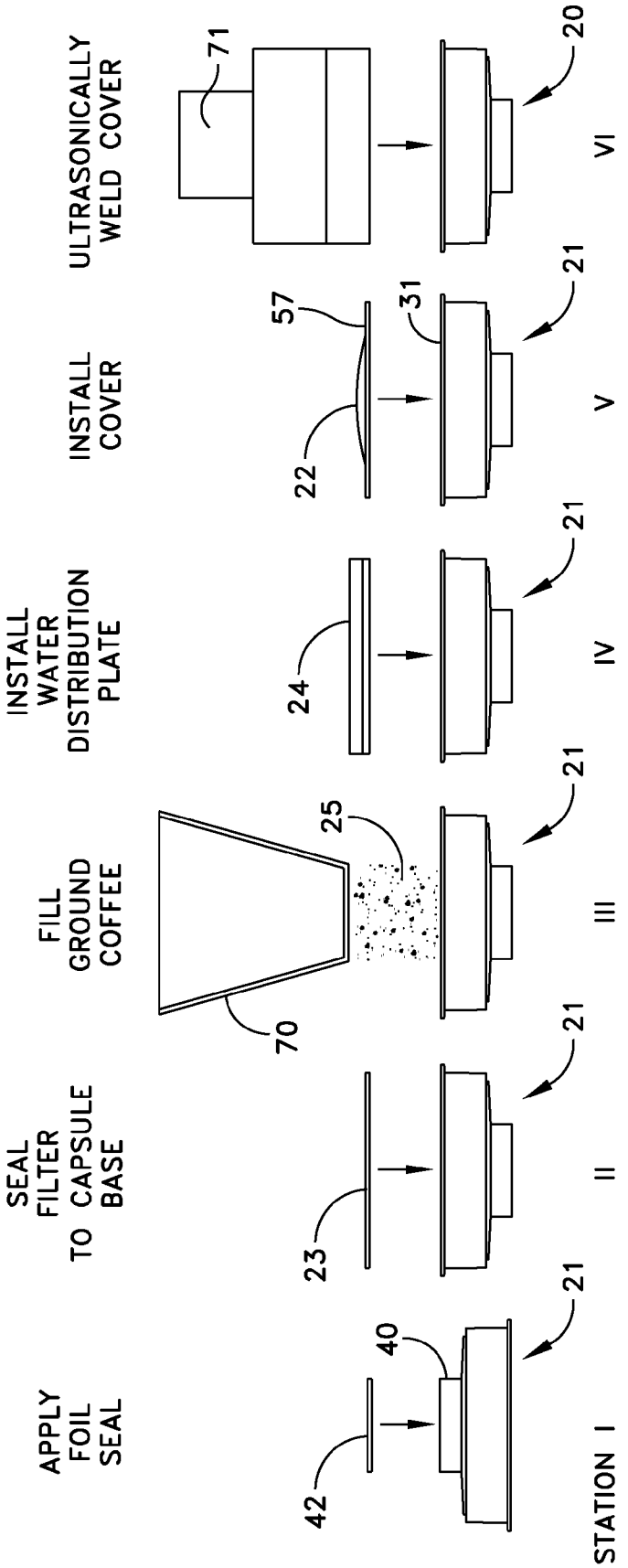
APPLY FOIL SEAL
SEAL FILTER TO CAPSULE BASE
FILL GROUND COFFEE
INSTALL WATER DISTRIBUTION PLATE
INSTALL COVER
ULTRASONICALLY WELD COVER
STATION I
II
III
IV
V
VI
42
40
21
23
70
25
24
22
57
31
71
20

FIG. 12

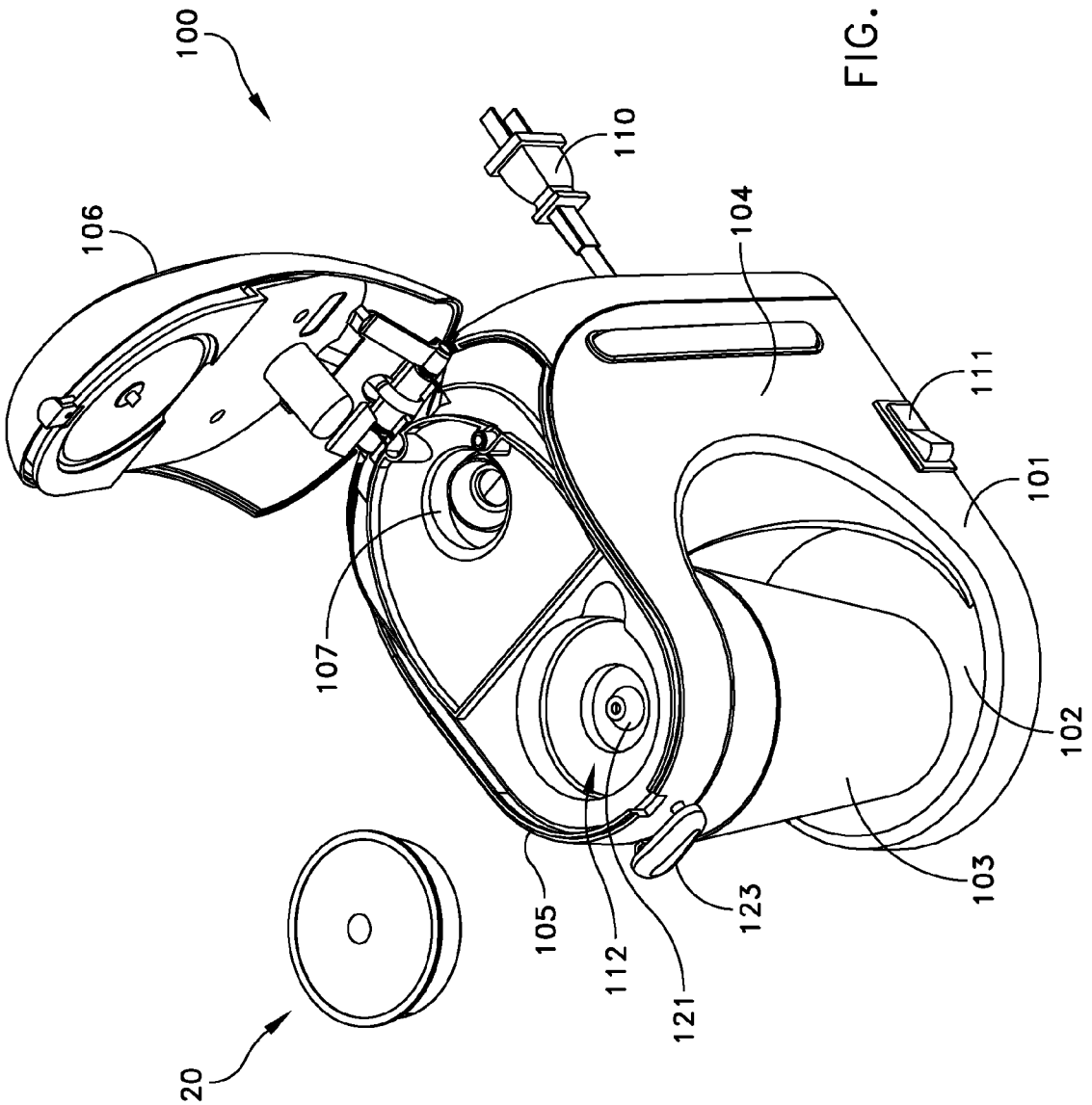

FIG. 13

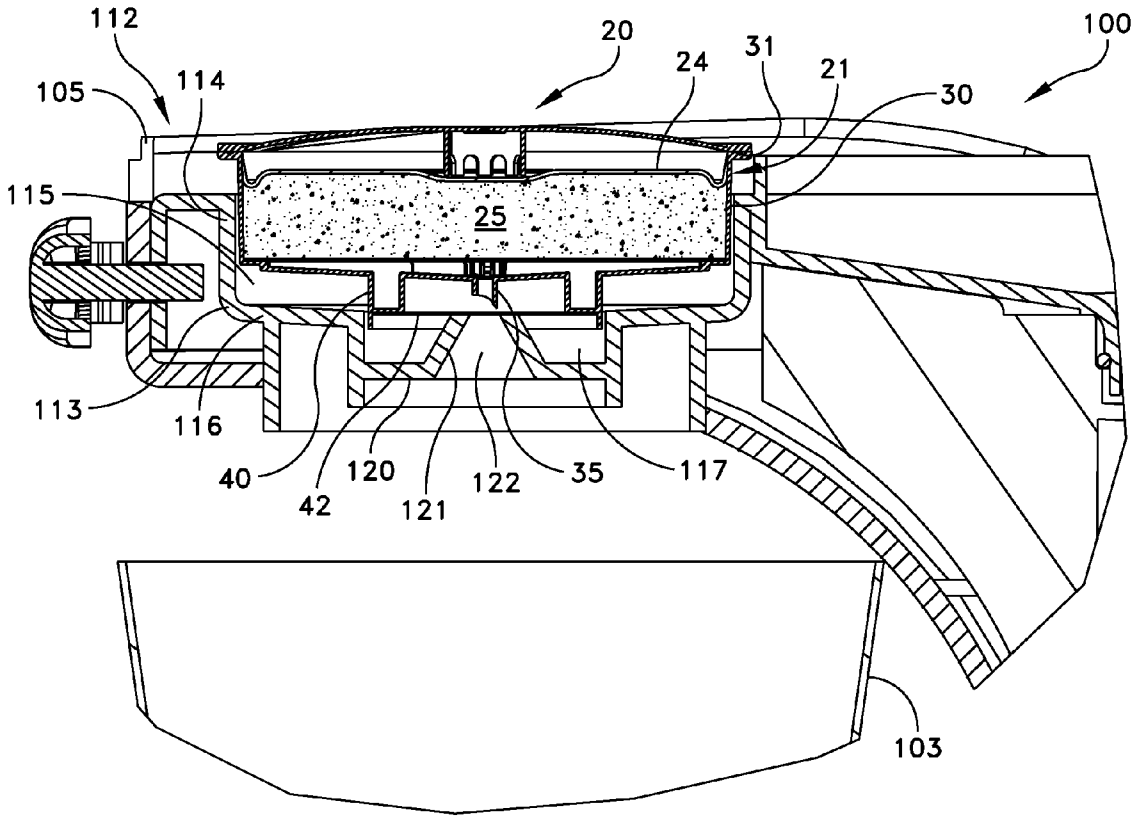
112
105
114
20
24
31
21
30
100
115
25
113
116
40
42
120
121
122
35
117
103

FIG. 14

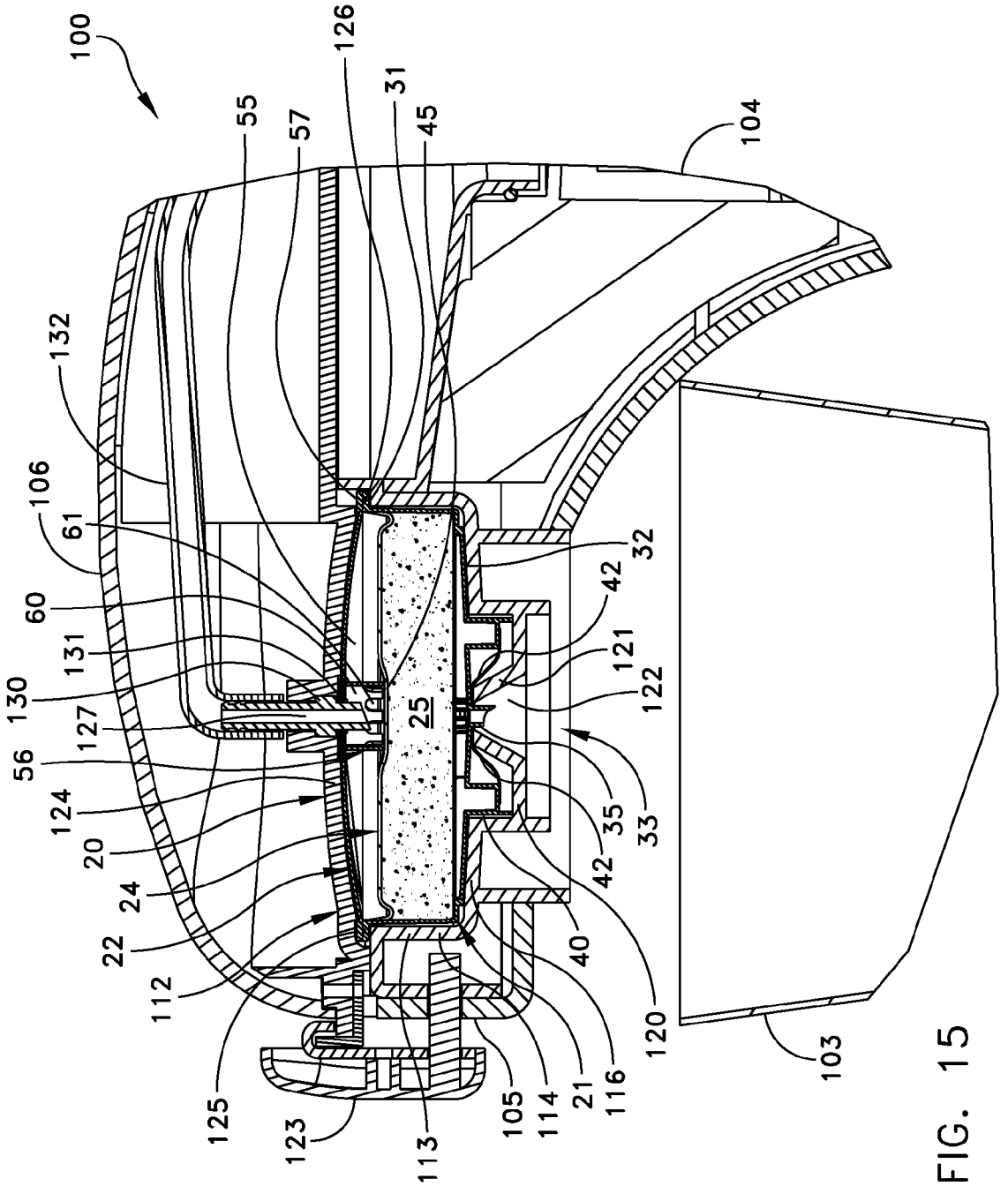
100
126
31
45
55
57
104
132
106
61
60
131
130
127
56
124
20
24
22
112
125
123
113
105
114
21
116
120
40
42
35
33
121
122
32
25
103

FIG. 15

INFUSIBLE MATERIAL CAPSULE FOR BREWING A BEVERAGE

CROSS REFERENCE TO RELATED APPLICATION

[0001] U.S. patent application Ser. No. (A85-046) for a Hot Beverage Brewing Apparatus filed on the same day as this application, assigned to the same assignee as the present invention and incorporated by reference herein.

BACKGROUND OF THE INVENTION

[0002] 1. Field of the Invention

[0003] This invention generally relates to the brewing of beverages. More specifically this invention relates to the construction and manufacture of sealed capsules containing infusible material, such as ground coffee, for brewing beverages.

[0004] 2. Description of Related Art

[0005] For many years preparing a beverage, such as coffee, has involved brewing multiple servings in a pot or other container using loose coffee grounds. In some apparatus, the coffee grounds mix with hot water and are then removed from the brewed beverage as, for example, in the so-called "French press" coffee maker. Other apparatus directs hot liquid at low pressure through an open or closed basket containing the loosely ground coffee over a filter, such as a paper filter cone.

[0006] The procedures and apparatus for brewing beverages, particularly coffee, have undergone many transformations in recent years spurred by different market requirements. A convenience requirement led to prepackaged packets of ground coffee as a substitute for manually measuring coffee from bulk packages of loose, ground coffee, as in conventional drip coffee makers. A prepackaged packet comprises a permeable filter paper pouch with a pre-measured portion of loose ground coffee. An impervious package stores the packet to maintain freshness. A packet is removed from its package and placed in a basket or like receptacle. Then hot water at atmospheric pressure flows through the packet and its contents for extracting flavor and aroma from the ground coffee.

[0007] Another market requirement has evolved as many users have indicated a preference to brew individual beverage servings. This preference for single-serve coffee brewing apparatus, especially for home use, led to the development of pre-packaged disposable coffee capsules, or cartridges, and related brewing apparatus. For example, U.S. Pat. No. 4,921,712 to Malmquist discloses a disposable cartridge for use in an automatic drip-type beverage brewing machine. The cartridge comprises a first cup which has an open first end and a substantially closed second end penetrated by at least one port. A filter member contains ground coffee and nests within the first cup. A second cup has an open bottom end and a substantially closed top end and overlies the first cup. The closed end of the second cup has a plurality of holes and forms a shallow receptacle. A user removes a sealing foil from the second cup and places the cartridge on ledges in a brewing apparatus spaced from a water delivery spout. The apparatus delivers hot water at low pressure and at a controlled rate onto the top of the cartridge. There is no requirement for sealing between the apparatus and the cartridge so long as water does not overflow the shallow receptacle.

[0008] U.S. Pat. No. 7,097,074 (2006) and U.S. Patent Application No. 2004/01997444 both to Haliday et al. and U.S. Pat. No. 6,681,960 (2004) to Garman disclose another low-pressure beverage preparation system. In this system a brewing chamber receives a cartridge.

[0009] Minimizing the brewing time became another market requirement. It was determined early on that the extraction time or "brewing cycle" of such brewing apparatus could be shortened significantly if coffee beans were ground more finely than those used in such drip-type brewing apparatus. Finer grinding exposes a larger surface area to the water. However, the coffee grounds have a higher packing fraction and volumetric density. This increases hydraulic resistance to the flow of water through the cartridge and the grounds therein. Therefore, the water has to be delivered in a closed brewing chamber under an elevated pressure to be able to flow through the coffee in a short period of time.

[0010] This led to a development of sealed brewing chambers formed by members that are integral to the brewing apparatus. For example, U.S. Pat. No. 4,389,925 (1983) to Paina describes a beverage extracting and dispensing machine for use with flattened round cartridges. A cartridge contains a brewable product, such as ground coffee, and has permeable upper and lower walls traversing a substantially cylindrical side wall. In this reference a pressure plate coacts with the cartridge to provide sealing.

[0011] However, brewing under pressure creates a problem because seals about a brewing chamber are subject to leaking. One approach has been to design brewing chambers with intricate seals. However, as the seals become more important to the integrity of the process, the placement of capsules becomes more critical to prevent water from bypassing the capsule and to avoid interference between portions of the capsule and the brewing chamber that could cause the seal to leak.

[0012] Ease of cleaning has become yet another market requirement. Cleaning such brewing apparatus can be complicated and can introduce complexities in the design and manufacture of such apparatus. A sealed brewing chamber is a part of the brewing apparatus and its surfaces contact the brewed beverage. Thus, after use, it is necessary to clean the interior surfaces of the brewing chamber. Preferably such surfaces should be on components of the apparatus that are easily removed for cleaning.

[0013] Use of such brewing apparatus in a non-residential or non-home environment, such as in a hotel room or other commercial environment, imposes still other market requirements. Criteria for this commercial market are quite different. In a hotel environment, for example, in-room coffee apparatus must be inexpensive, be operated reliably with minimal operating costs and be easy to use. Moreover, and most importantly, such brewers must minimize the efforts of room attendants to clean and maintain the brewing apparatus, to dispose of used coffee grounds and to replenish coffee supplies in the room. In many hotels, in-room coffee apparatus includes a water heater, cups and prepackaged, pre-measured sealed packets of instant coffee. Other hotels have begun to use conventional coffee brewing machines that use capsules or cartridges to brew the coffee.

[0014] The advent of a desire to use a single apparatus to brew different serving sizes imposed another market requirement. When single-serve coffee brewing apparatus was introduced, there was a de facto standard serving size of about 175 ml (6 oz.). Over time, however, different single-serving sizes have become popular, requiring pre-measured packages of coffee in different sizes. One approach is to supply each

IPR2023-00502
Nespresso USA, Inc. Ex. 1015

pre-measured quantity in a cartridge of a unique size and capacity. A requirement for capsules of different sizes requires the capsule manufacturer to inventory parts for each size and adjust various parameters of the manufacturing process to accommodate such sizes. Moreover, differently sized capsules can complicate the construction of brewing apparatus to allow the apparatus to accommodate capsules of different sizes.

[0015] All of these market requirements have led to proposals for a wide variety of capsule structures and related apparatus. For example, U.S. Pat. Nos. 5,197,374, 5,242,702 and 5,897,899 (199) to Fond disclose devices for extracting coffee contained in a cartridge and a number of variations on sealed cartridges. The cartridge has a cup and cover to form a sealed container for an infusible material. When installed in a brewing apparatus, a water injector pierces either the cover or the cap to apply water under pressure to be discharged through a flow grill or like portion of the capsule.

[0016] In U.S. Pat. No. 4,846,052 to Favre et al., a device extracts material, such as coffee, from an infusible material contained in a sealed cartridge by puncturing one end of a cartridge with a sharpened water delivery tube and by perforating the other end of the cartridge to dispose the brewed beverage into a dispensing passage.

[0017] U.S. Pat. No. 5,794,519 (1998) to Fischer discloses a brewing head including lower and upper parts hingably connected together. A plurality of hollow needles project from the upper part into a brewing cavity for delivering water to the interior of a coffee brewing capsule. The lower part has projections intended to puncture the lower side of the coffee capsule. An ejector device within the upper part ejects a used coffee capsule.

[0018] U.S. Pat. Nos. 6,499,388 (2002) and 6,536,332 (2003) to Schmed disclose perforator members located in a brew chamber perforating one end of a coffee cartridge for extracting brew from the cartridge. The brew chamber forms a sealed receptacle during brewing.

[0019] U.S. Pat. No. 6,880,454 (2005) to Kollep discloses perforator members located in a brew chamber. The perforator members pierce a capsule to deliver water for brewing coffee. U.S. Pat. No. 6,966,251 (2005) to Yoakim discloses an alternate embodiment in which perforator members located in the brew chamber perforate a coffee capsule.

[0020] U.S. Patent Application No. 2005/0172822 to Macchi et al. discloses a cartridge for coffee. The cartridge comprises a container for a soluble product, a lid placed on top of the container and a filter positioned inside the container. A bottom wall of the container comprises a thin, weakened central portion and a breakable portion. The brewing apparatus receives the cartridge in a sealed chamber. After brewing, the pressure breaks the bottom to allow the beverage to be dispersed.

[0021] U.S. Pat. No. 6,607,762 (2003) to Lazaris et al. discloses a filter cartridge where a permeable beverage filter element divides the interior of the container into first and second chambers. Ribs support the permeable filter within the container. The first chamber contains the beverage medium; the second collects the brewed beverage for dispensing. Infusion and exit probes penetrate a lid to direct water into and brewed beverage from the first and second chambers, respectively.

[0022] U.S. Pat. No. 6,832,542 to Hu et al. discloses a capsule for preparation of beverages by directing hot water under pressure to the capsule. A section of the capsule is adapted to deform inwardly upon action of the internal water pressure. The capsule is in a sealed chamber during brewing.

[0023] U.S. Patent Application Nos. 2003/0172813, 2005/0150390 and 2005/0150391 to Schifferle disclose cartridges containing a single serving of substance extractable by means of water for preparing a beverage. Fluid director members positioned ahead of and behind the substance distribute the water. A gas-tight foil covers the cartridge. Specifically, U.S. Patent Application No. 2005/0150391 discloses a coffee maker for brewing powder coffee contained in a cartridge. The bottom of the cartridge is provided with an aperture. A foil covers the inside of the bottom of the cartridge.

[0024] Experience with prior art capsules and brewing apparatus have led to a new set of required market features for apparatus that can be used in both residential and commercial environments. Specifically these markets demand a capsule containing infusible material such as coffee, which is simple to use and inexpensive to manufacture and which preserves the freshness of the infusible material. The capsules must enable infusible material to be brewed under pressure in the capsule. The capsules must be tamper-proof so an individual user can be assured that others have not touched the capsule contents. When such capsules are used in a brewing apparatus, the brewing capsules must be sufficiently rigid for being stored in and dispensed from vending machines or other dispensers for preventing damage during brewing. They must also be readily disposable. Further, the capsule structure must enable the construction of a brewing apparatus that is easy to use and requires minimal maintenance. A review of the prior art described above demonstrates that each different capsule version may meet one or more of the requirements, but not all of them.

[0025] What is needed is a capsule that meets all the market requirements, that is easy and inexpensive to manufacture, is easy to use and enables the construction of brewing apparatus that meets all the market requirements for such apparatus and that requires minimal user maintenance.

SUMMARY

[0026] Therefore it is an object of this invention to provide a sealed capsule containing an infusible material that can be used in a beverage brewing apparatus that meets all the market requirements.

[0027] Another object of this invention is to provide a capsule containing an infusible material that is inexpensive to produce, that preserves the freshness of the infusible material and that is intuitively obvious to use.

[0028] Still another object of this invention is to provide a capsule for use in a beverage brewing apparatus that acts as a disposable infusion chamber and that isolates any brewed beverage from the brewing apparatus.

[0029] Yet another object of this invention is to provide a capsule that can accommodate different quantities of infusible material.

[0030] Yet still another object of this invention is to provide a capsule for infusible material that enables the construction of a beverage brewing apparatus that is easy to use and requires minimal maintenance.

[0031] In accordance with one aspect of this invention an infusible material capsule is provided for use in apparatus for dispensing a brewed beverage into a beverage receptacle wherein the apparatus delivers liquid to the capsule and includes a capsule receiving station for supporting and capsule. The capsule includes a capsule base that contains the

IPR2023-00502
Nespresso USA, Inc. Ex. 1015
Page 13 of 19

infusible material. A dispensing structure directs brewed beverage to the beverage receptacle. A standoff extends from the capsule base proximate the dispensing structure for forming a seal support. A seal attaches to the standoff for sealing the dispensing structure. The seal ruptures against the dispensing structure as the capsule seats in the capsule receiving station thereby to enable brewed beverage to pass from the dispenser structure directly to the beverage receptacle.

[0032] In accordance with another aspect of this invention, an infusible material capsule is provided for use in apparatus for dispensing a brewed beverage into a beverage receptacle wherein the apparatus delivers liquid to the capsule. The capsule includes capsule base, cover and liquid distribution components. The capsule base component defines an open-ended cavity with a permeable support structure that contains infusible material and from which brewed beverage can be dispensed. The cover attaches to the capsule base and has a pierceable inlet for directing liquid into the cavity from the apparatus. The cover also seals the cavity. The liquid distribution component is intermediate the cover and the infusible material at a predetermined position in the cavity for distributing the liquid across the infusible material. A positioner on the liquid distribution component maintains its position in the cavity whereby the liquid distribution component can be positioned to compress a range of infusible material quantities in the cavity.

[0033] In accordance with still another aspect of this invention, an infusible material capsule is provided for use in apparatus for dispensing a brewed beverage into a beverage receptacle wherein the apparatus includes a water delivery probe that delivers hot water under pressure to the capsule and a capsule receiving station. The capsule includes a capsule base having a side wall, an open end and a dispensing structure and having a floor and ribs that channel brewed beverage to the dispensing structure. The dispensing structure includes a sharpened spout extending from the floor, a collar concentric with the spout, and a seal attached to the collar to overlie the spout to provide a first seal for maintaining the freshness of the infusible material, the seal being ruptured over the sharpened spout as the capsule seats in the capsule receiving station.

[0034] The capsule additionally includes a filter supported by the ribs, infusible material on the filter, a water distribution plate and a cover. The water distribution plate has a plurality of apertures therethrough and engages the side wall thereby to compact the infusible material against the filter. The cover attaches to the capsule base at the open end thereby to provide a second seal for maintaining the freshness of the infusible material. A portion of the cover is adapted for being penetrated by the water delivery probe to deliver hot water under pressure intermediate the cover and the water distribution plate,

BRIEF DESCRIPTION OF THE DRAWINGS

[0035] The appended claims particularly point out and distinctly claim the subject matter of this invention. The various objects, advantages and novel features of this invention will be more fully apparent from a reading of the following detailed description in conjunction with the accompanying drawings in which like reference numerals refer to like parts, and in which:

[0036] FIG. **1** is a perspective view of a capsule constructed in accordance with this invention;

[0037] FIG. **2** is another perspective view of the capsule in FIG. **1** with a portion broken away;

[0038] FIG. **3** is a partially sectioned exploded view showing the components of the capsule in FIG. **1** in perspective;

[0039] FIG. **4** is a cross-sectional view taken along lines **4-4** in FIG. **1** of an assembled capsule containing a small amount of infusible material;

[0040] FIG. **5** is a cross-sectional view taken along lines **4-4** in FIG. **1** of an assembled capsule containing a maximum amount of infusible material;

[0041] FIG. **6** is a perspective view of a capsule base component for the capsule of FIG. **1**;

[0042] FIG. **7** is a cross-sectional view taken along lines **7-7** in FIG. **6**;

[0043] FIG. **8** is a cross-sectional view of a water distribution plate used in the capsule taken along lines **4-4** of FIG. **1**;

[0044] FIG. **9** is a perspective view, partially broken away, of a cover component for the capsule of FIG. **1**;

[0045] FIG. **10** is a cross-sectional view of the cover taken along the lines **10-10** of FIG. **9**;

[0046] FIG. **11** is a cross-sectional view of an alternate embodiment for a cover;

[0047] FIG. **12** depicts a process for manufacturing capsules of this invention;

[0048] FIG. **13** is a perspective view of beverage brewing apparatus adapted to utilize a capsule constructed in accordance with this invention with its lid open;

[0049] FIG. **14** is a cross-sectional view through a portion of the apparatus shown in FIG. **13** with an open lid; and

[0050] FIG. **15** is a partial cross-sectional view like that in FIG. **14** with a closed lid.

DESCRIPTION OF ILLUSTRATIVE EMBODIMENTS

[0051] In the foregoing Description of Related Art, "capsule" and "cartridge" tend to be used interchangeably. The following description limits the term to "capsule" for purposes of clarity and consistency.

Capsule **20**

[0052] As shown in FIGS. **1** through **11**, and particularly FIGS. **1** through **5**, an infusible material capsule **20** constructed in accordance with this invention is an integral structure comprising several components. Externally these include a capsule base **21** for containing the infusible material and a capsule cover **22**. Internally, the capsule **20** includes a layer of filter paper or filter **23** and a liquid or water distribution plate **24**. Infusible material, such as the ground coffee **25** shown in FIGS. **4** and **5**, is contained in a cavity intermediate the water distribution plate **24** and the filter **23** and bounded by a side wall **30** of the capsule base **21**.

[0053] More specifically and referring to FIGS. **3** through **7**, the capsule base **21** includes a side wall **30** and has a cup shape with a closed bottom and an open top. A radially outwardly extending flange **31** on the side wall **30** at the periphery of the open top provides a planar annular support surface for the cover **22**. As shown in FIGS. **6** and **7**, a floor **32** closes the bottom of the capsule base **21** and is slightly concave in shape. The floor **32** includes a central dispensing structure **33** that directs the brewed beverage through a central aperture **34** and a dispensing spout **35** to a cup or other beverage recep-

IPR2023-00502
Nespresso USA, Inc. Ex. 1015

tacle. The dispensing spout **35** extends externally, downwardly in FIGS. **3** through **7**, from the bottom floor **32** to a free end that is sharpened.

[0054] The floor **32** includes integral, radially extending, angularly spaced interior ribs **36** and **37** that taper toward the periphery. The ribs **36** are longer than the ribs **37**. These ribs perform multiple functions. They support the filter **23**. In combination with the concavity of the floor **32**, the ribs **36** and **37** form converging, sloping channels from the side wall **30** down to the aperture **34** thereby to channel brewed beverage through the aperture **34** and the dispensing spout **35**. The ribs **36** and **37** also maximize the rigidity of the floor **32** to maintain its structural integrity. In addition, the capsule **20** is formed with a circular ledge **38** at the intersection of the side wall **30** and the floor **32** that further improves capsule rigidity. During manufacture, the filter **23** is affixed to the ledge **38** in a manner known in the art to maintain the position of the filter **23** in the capsule base **21**.

[0055] Referring specifically to FIGS. **2** through **5** and **7**, a rim or collar **40** extends downwardly from the exterior of the floor **32** thereby to form a standoff that is concentric with the spout **35** and proximate thereto. That is, the collar **40** extends for a distance that is at least the distance the spout **35** extends from the floor **32**. The collar **40** thereby protects the dispensing spout **35** during handling and storage.

[0056] A free end **41** of the collar **40** forms an annular planar support surface that supports a thin gas impermeable sealing foil **42**. The foil **42** seals the spout **35** to maintain the freshness of the infusible material **25**. The foil **42** also prevents an individual from contacting the sharpened end of the spout **35**. An adherent material, or other means, fixes the foil **42** to the free end **41**. In this embodiment, an outer peripheral cylindrical extension of the collar **40** forms a protective peripheral barrier or fence **43**. The fence **43** prevents any accidental puncture of the foil **42** by being pushed against the free end of the spout **35** prior to its intentional puncture during the brewing process as will be discussed later.

[0057] Now referring to FIGS. **3** through **5** and **8**, the water distribution plate **24** is a thin plate **44** with a dimpled center portion **45** and a peripheral positioning structure **46**. A plurality of spaced apertures **47** extend through the plate in an annular area **48** between the center portion **45** and the positioning structure **46**. Each aperture **47** allows the passage of brewing liquid, such as water, but blocks the passage of coffee grounds. The collective or total area for the apertures **47** allows the passage of the volume of liquid being supplied under pressure above the water distribution plate **24** with only a minimum pressure drop. The plurality of apertures **47** can be in a random or ordered array.

[0058] The positioning structure **46** in FIGS. **4** and **5** enables the capsule **20** to be manufactured with different quantities of infusible material. Specifically, the positioning structure **46** has a generally J-shape with a downwardly extending leg **50**, a reverse bend **51** and a tail **52** with a preferably feathered outer surface **53** that slides over the interior surface of the side wall **30** as the water distribution plate **24** is inserted into the capsule **21**.

[0059] As described in more detail later, the manufacturing process includes the step of dispensing a quantity of infusible material, such as coffee grounds, into the capsule **20**. Referring to FIGS. **4** and **5**, the capsule base **21** with an installed filter **23** receives the infusible material. Then the water distribution plate **24** is inserted and displaced toward the bottom wall **32** until a predetermined force has been achieved. This is the force required to compact the infusible material to a specified density.

[0060] When that force is released, the positioning structure **46** blocks any reverse displacement. Specifically, the resulting force on the water distribution plate **24** produces a radially outwardly acting force on the tail **52** that forces the feathered outer surface **53** against the interior surface of the side wall **30**.

[0061] As will be appreciated, when the capsule base **21** is manufactured by injection molding, the side wall **30** will not be cylindrical, but will have a slight inward taper, or "draft" from the open end to the bottom wall **32**. This "draft" enables the injection molding dies to separate after a part is formed and the part to be ejected from the mold. As known, these draft angles are only a few degrees. When the draft angle is approximately 2° or less, the resulting frictional force between the feathered outer surface **53** and the side wall **30** is greater than the force trying to displace the water distribution plate **24**, so the water distribution plate **24** remains fixed in position.

[0062] Thus, this positioning structure **46** is not dependent upon being locked at a mechanically predetermined position within the capsule base **21**. Consequently, the positioning structure **46** enables a capsule base **21** to have sufficient depth to accommodate a range of quantities of infusible materials. In one embodiment, the capsule base **21** can accommodate up to 18 grams (0.6 ounces) of coffee. FIGS. **4** and **5** depict different configurations of a single version of a capsule with approximately 9 grams and 18 grams of ground coffee respectively. Thus, the single capsule **20** is flexible because it can provide appropriate quantities of infusible material for cups of different sizes or for different strengths of the infusible material, including, but not limited to, coffee tea and cocoa, or for a combination of size and strength thereof.

[0063] In this embodiment the feathered outer surface **53** slides along a smooth inner surface of the side wall **30**. It will be apparent to those skilled in the art that other mechanisms to limit a water distribution plate to a one-way motion can be substituted for the specifically disclosed positioning structure **46**. For example, a plurality of ridges could be located over portions of the inner side wall surface to provide a positive incremental detent action by interacting with a structure equivalent to the tail **52**.

[0064] Now referring to FIGS. **3** through **5**, **9** and **10**, the cover **22** has a dome-like thin circular body **54** with a plurality of angularly spaced, radially extending, tapered ribs **55** extending from a central structure **56** to a peripheral flange **57**. The ribs **55** provide structural integrity. As previously indicated, the peripheral flange **57** and the flange **31** on the base **21** are joined to form an integral assembly by ultrasonic welding or other techniques.

[0065] The central structure **56** enables a water supply probe to pierce the cover **22** to deliver liquid under pressure to the capsule **20**. The central structure **56** includes a cylindrical body **60** that depends from the body **54** and terminates with a plurality of radially facing, arched passages **61**. A breakout **62** of the cover **22** is aligned with the cylindrical body **60** to facilitate piercing. In this embodiment an integral cylindrical barrier **63** surrounds the breakout **62** to block any propagation of the effects of piercing thereby to preclude any impact on the integrity of the cover **22**.

[0066] FIG. **11** depicts an alternative embodiment of the cover **22** wherein like reference numbers identify like ele-

ments. In this embodiment, like the embodiment of FIGS. **9** and **10**, the central structure **56** includes a cylindrical body **60** that depends from the body **54** and terminates with a plurality of radially facing, arched passages **61**. In this embodiment, however, the breakout **62** and barrier **63** of FIGS. **9** and **10** is replaced by a preformed aperture **64** and a gas impermeable sealing foil **65**. The sealing foil **65** is fixed to a portion of the body **54** surrounding the aperture **64** to provide necessary sealing to maintain the freshness of the contents. The aperture **64** is sized to receive the probe. With this alternative there is no requirement for breaking any of the material of the body **54** as shown in FIGS. **9** and **10**. Rather the probe merely penetrates the sealing foil **65** to access the interior of the capsule **20**. This modification permits the foil to be printed with information pertinent to the use of the capsule or to provide information about the content of the capsule.

Capsule Manufacture

[0067] Before describing the operation and use of the capsule **20** in FIG. **1**, it will be helpful to review the manufacturing process for the capsule **20**. As will become apparent, the foregoing construction greatly simplifies the manufacturing process. First, it is possible to manufacture each of the components shown in FIG. **3**, namely the base **21**, the cover **22**, the filter **23**, and water distribution plate **24** and the foil **42** in advance. With the proper selection of the depth of the base **21**, only one version, or only a limited number of versions, will be required for this component to cover a wide range of content capacity. All the other components will be identical notwithstanding the quantity of infusible material to be included in the capsule **20**. Further, other than the filter **23**, and foil **42**, all the other components can be manufactured by injection molding or other inexpensive manufacturing processes. Filters **23** and foil **42** can be punched or otherwise cut from sheets or the like. Consequently, there is only a minimal cost associated with the manufacture of the components.

[0068] FIG. **12** schematically illustrates a process for manufacturing capsules, such as the capsule **20** in FIGS. **1** through **5**. The process begins at Station I by inverting the capsule base **21** as shown for the application of the foil **42** onto the collar **40**.

[0069] During a transfer from Station I to Station II, the capsule base **21** is inverted to an upright position. Station II loads the filter **23** into the capsule base **21** to lie atop the ribs **36** and **37** and be affixed to the circular ledge **38** as shown in FIG. **6**. At Station III a dispenser, shown schematically as a dispensing tube **70**, deposits an allocated quantity of infusible material, such as coffee grounds **25** into the capsule base **21** over the filter **23**.

[0070] At Station IV other manufacturing apparatus advances the water distribution plate **24** into the capsule base **21** to an appropriate position to achieve the desired packing density.

[0071] At Station V, other manufacturing apparatus attaches the cover **22** to the top of the base **21** such that the flanges **31** and **57** are aligned for being joined by an ultrasonic welder **71** or other known apparatus to form the completed capsule **20** at Station VI. As will be apparent, an inert gas, such as argon or nitrogen may be introduced into the capsule **20** prior to installing the cover **22**. The introduction of such a gas displaces any air within the capsule **20** to assist in preserving freshness.

[0072] As will now be apparent, the capsule **20** constructed in accordance with this invention and shown in FIGS. **1** through **5** is inexpensive to produce. It is sealed to preserve the freshness of the infusible material. Further, as best illustrated in FIGS. **4** and **5**, the capsule **20** can receive a range of quantities of infusible material. The adjustments necessary to change the quantity of infusible material are operating changes that control the dispenser **70** and the force applied to the water distribution plate **24**. No tooling changes are involved, as might be to accommodate capsule bases of different depths. The dimpled center **45** of the water distribution plate **24** provides some additional capacity by allowing the balance of the water distribution plate **24** to have a final position above the central structure **56** such that the integrity of the dimpled center **45** is not compromised during the piercing operation.

Brewing Apparatus

[0073] The manner in which a capsule constructed in accordance with this invention, like the capsule **20** in FIG. **1**, enables the construction of brewing apparatus that further meet the various objectives of this invention can be better understood by referring to FIGS. **13** through **15** that disclose one embodiment of a brewing apparatus **100** that takes advantage of the characteristics of the capsule **20**. As particularly shown in FIG. **13**, the brewing apparatus **100** has a base structure **101** with a platform **102** for receiving a mug, cup or other type of beverage receptacle **103**.

[0074] A vertical structure **104** rises from the base structure **101** and supports an upper structure **105** that cantilevers over the platform **102** The vertical structure **104** also carries a hinged lid **106** and houses the electrically operated equipment for producing hot water under pressure. In this particular apparatus the user can pour a required quantity of water into a water filling station **107** that is exposed when the lid **106** is open. The apparatus **100** also includes a power cord **110** and a switch **111** to initiate and terminate operations. Finally, the upper structure **105** also has a capsule receiver station **112**.

[0075] When the lid **106** is open, a user inserts the capsule **20** into the capsule receiver station **112**. Referring specifically to FIG. **14**, the capsule receiver station **112** includes a cup-shaped receiver component **113** with a cylindrical side wall **114** that forms a well **115** that closely fits the capsule side wall **30**. A floor **116** has a central opening **117** formed by an annular depending channel **120** with an inner frustoconical wall **121** that forms an inverted funnel-like opening **122**. At the top of the frustoconical wall **121**, which is also shown in FIG. **13**, the opening **122** has a diameter that is larger than the diameter of the spout **35**. The outer diameter at the base of the wall **121** is less than the inner diameter of the collar **40**. As shown in FIG. **14**, when a user places a capsule **20** in the capsule receiver station **112**, the upper surface of the frusto conical wall **121** initially supports the capsule **20** at the foil **42**. So the capsule **20** remains sealed.

[0076] Next, and referring to FIGS. **14** and **15**, the user closes the lid **106** and uses a latch **123** to fix the lid **106** in a latched position. As shown in FIG. **15**, the lid **106** includes cover member **124**. The cover member **124** has a smooth inner surface and an annular peripheral clamping surface **125**. The clamping surface **125** aligns with a free edge **126** of the sidewall **114** for the capsule receiver member **113**. The lid **106** also supports a water delivery probe **127** with a central body portion **130** and a seal, a flat annular seal **131** in this embodiment. The water delivery tube attaches to a hot water delivery tube **132** from a hot water delivery system that delivers hot water under pressure to the probe **127**.

[0077] Still referring to FIG. **15**, as the user closes and latches lid **106**, several actions occur essentially simultaneously. For example, the water delivery probe **127** penetrates the cover **22** through the breakout **62** shown in FIG. **9**) and the flat seal **131** seals the cover **22** to the cover member **124**.

[0078] As the cover member **124** exerts a downward force on the cover **22**, the capsule displaces downward into the cup-shaped receiver component **113**. This causes the frustoconical wall **121** to rupture the foil **42** over the sharpened spout **35** and to expose the open spout **35** in the opening **122**. This downward motion continues until the capsule base floor **32** seats on the floor **116**. The collar **40** then lies positioned in the annular channel member **120**.

[0079] As the lid **106** latches, the capsule **20** is firmly held inside the cavity defined by the receiver member **113** and the clamping member **124**, with the center of the cover **22** proximate the flat annular seal **131**.

[0080] FIG. **15** depicts the water distribution plate **24** at its maximum height. Probe penetration is limited and terminates above the dimpled center **45**. Thus with the lid **106** closed and latched, a closed path for liquid exists from the delivery tube **132**, through the probe **127** and the capsule **20** to the spout **35**. Both the hot water and brewed beverage are confined to the interior of the capsule **20**. The brewed beverage does not contact any portion of the apparatus **100**.

[0081] In use, once the lid **106** is latched in place, the user closes the switch **111** to initiate operation whereupon the electrical equipment apparatus in the vertical structure **104** produces hot water under pressure at the requisite temperature. A delivery tube **132** and the probe **127** direct the hot water into a chamber defined between the cover **22** and the water distribution plate **24**. In this upper plate position, the water flows through the arched passages **61** particularly shown in FIGS. **9** and **10** to spread over the top of the water distribution plate. When the cavity between the cover **22** and water distribution plate **24** fills, the pressure stabilizes and the water is forced through the distribution plate apertures and coffee grounds to be dispensed through the floor **32** and spout **35** into the receptacle **103**. The internal water pressure also provides the sealing force between the cover **22** and the flat annular seal **131**.

[0082] As will now be apparent, the probe **127** also does not contact either the brewed beverage or the coffee grounds. Specifically, the water distribution plate **24** prevents coffee grounds from migrating into the cavity between the cover **22** and the water distribution plate **24**. As essentially all the pressure drop occurs across the coffee grounds, brewed beverage does not migrate above the water distribution plate **24**.

[0083] A capsule incorporating the features of this invention enables the construction of a brewing apparatus, such as the brewing apparatus **100**, which achieves many objectives of this invention. Using apparatus for brewing coffee as an example, a user opens the lid, selects a capsule and deposits it in the capsule receiver station, pours water into the apparatus at the water inlet station, closes the lid and turns on a switch. When the coffee has been brewed, the user only has to remove the filled beverage receptacle from the apparatus. There is no requirement for further user intervention. As a result, the apparatus is easy to use. As the beverage is brewed within the capsule, no brewed beverage or infusible material contacts any part of the brewing apparatus. Consequently the brewing apparatus requires minimal cleaning because there is no need to clean any portion of the capsule receiver station.

[0084] A capsule in accordance with this invention also allows a hotel or other commercial establishment to provide its customers or employees with a variety of brewing options from a single brewing apparatus. For example, a hotel could provide apparatus in each room with a variety of capsules of the same exterior dimensions with different types of infusible material, such as Columbian coffee, decaffeinated coffee, tea, cocoa etc. For a given type of infusible material the hotel could also provide a variety of capsules of the same exterior dimensions with different quantities of infusible material for brewing different amounts or strengths of the beverage. Consequently, the hotel could provide the user with a variety of beverage choices. Such capsules constructed in accordance with this disclosure, or variations thereof, could also enable the implementation of brewing apparatus with still other advantages.

[0085] This invention has been disclosed in terms of certain embodiments and variations on those embodiments. It will be apparent that the foregoing modifications and many other modifications can be made to the disclosed apparatus without departing from the invention. Therefore, it is the intent of the appended claims to cover all such variations and modifications as come within the true spirit and scope of this invention.

What is claimed as new and desired to be secured by Letters Patent of the United States is:

1. An infusible material capsule for use in apparatus for dispensing a brewed beverage into a beverage receptacle wherein the apparatus includes means for delivering liquid to said capsule and a capsule receiving station that supports said capsule and wherein said capsule includes capsule base means containing the infusible material therein and including:

A) dispensing means on said capsule base means for directing brewed beverage to the receptacle,

B) standoff means extending from said capsule base means proximate said dispensing means for forming a seal support, and

C) sealing means attached to said standoff means for sealing said dispensing means, said sealing means rupturing against said dispensing means as said capsule seats in said capsule receiving station thereby to enable brewed beverage to pass from said dispensing means directly to the beverage receptacle.

2. An infusible material capsule as recited in claim **1** wherein said capsule base means includes a floor and said dispensing means includes means for forming an aperture in said floor thereby to enable the brewed beverage to pass from said capsule.

3. An infusible material capsule as recited in claim **2** wherein said aperture forming means includes spout means extending from said floor for forming a passage from the floor aperture.

4. An infusible material capsule as recited in claim **3** wherein said spout terminates in a sharpened free end that ruptures said seal.

5. An infusible material capsule as recited in claim **3** wherein said floor is concave for forming a sloped surface toward the floor aperture.

6. An infusible material capsule as recited in claim **5** wherein the floor aperture is centered in said floor and said capsule base means additionally includes means for directing brewed beverage to said dispensing means.

IPR2023-00502
Nespresso USA, Inc. Ex. 1015

7. An infusible material capsule as recited in claim **6** wherein said means for channeling includes a plurality of angularly spaced, radially extending ribs.

8. An infusible material capsule as recited in claim **7** wherein said capsule additionally includes means for filtering the brewed beverage, said ribs supporting said filtering means.

9. An infusible material capsule as recited in claim **3** wherein said aperture forming means is centered on said floor and standoff means includes collar means spaced from and concentric with said spout means.

10. An infusible material capsule as recited in claim **9** wherein said collar means terminates in a planar surface and said sealing means comprises a gas impermeable foil attached to said planar surface.

11. An infusible material capsule for use in apparatus for dispensing a brewed beverage into a beverage receptacle wherein the apparatus includes a means for delivering liquid to said capsule and wherein said capsule comprises:

A) capsule base means for defining an open-ended cavity including a permeable support structure for containing infusible material from which brewed beverage can be dispensed,

B) cover means attached to said capsule base means with a pierceable inlet means for directing liquid from the liquid delivery means into said cavity, said cover means sealing said cavity, and

C) liquid distribution means intermediate said cover means and the infusible material at a predetermined position in said capsule base means cavity for distributing the liquid across the infusible material, said liquid distribution means including positioning means for maintaining the predetermined position of said liquid distribution means in said cavity whereby said liquid distribution means can be positioned to compress a range of infusible material quantities in said cavity.

12. An infusible material capsule as recited in claim **11** said capsule base means includes peripheral wall about said cavity and said positioning means includes flexible means at the periphery of said liquid distribution means for engaging said wall thereby to allow movement of said liquid positioning means in said cavity only toward the infusible material.

13. An infusible material capsule as recited in claim **12** wherein said wall is characterized by conical shape at a draft angle, wherein said liquid distribution means includes a substantially planar annular portion and wherein said flexible means comprises a J-shaped peripheral portion extending from said annular portion for engaging said wall.

14. An infusible material capsule as recited in claim **13** wherein said flexible means terminates with a feathered edge surface that engages said wall.

15. An infusible material capsule as recited in claim **14** wherein said annular portion includes a plurality of apertures therethrough for enabling the passage of the liquid therethrough and for confining the infusible material between said permeable support structure in said capsule base means and said liquid distribution means.

16. An infusible material capsule as recited in claim **11** wherein said cover additionally includes central structure means including a plurality of radial passages for directing liquid over said liquid distribution means.

17. An infusible material capsule as recited in claim **16** wherein said cover includes a plurality of angularly spaced ribs extending radially from said central structure.

18. An infusible material capsule as recited in claim **16** wherein said cover includes a centrally located breakout portion that is easily penetrated.

19. An infusible material capsule as recited in claim **18** wherein said cover additionally includes means for localizing the effects of piercing said breakout portion.

20. An infusible material capsule as recited in claim **16** wherein said cover means includes a central aperture therethrough sized to accommodate a water delivery probe and a gas impermeable sealing foil attached to said cover proximate said central aperture and overlying said central aperture.

21. An infusible material capsule for use in apparatus for dispensing a brewed beverage into a beverage receptacle wherein the apparatus includes means for delivering hot water under pressure to said capsule and capsule receiving means for supporting said capsule, said capsule comprising:

A) a capsule base that forms a cavity for a predetermined quantity of the infusible material and that includes:

i) a dispenser that directs brewed beverage to the receptacle, and

ii) a standoff extending from said capsule base proximate said dispenser that forms a seal support,

B) a gas impermeable seal attached to said standoff that overlies said dispenser thereby to preserve freshness, said seal being ruptured against said dispenser as said capsule is seated in the capsule receiving means thereby to enable brewed beverage to pass from said capsule to the beverage receptacle without contacting the beverage brewing apparatus.

22. An infusible material capsule as recited in claim **21** wherein said capsule base includes a floor and said dispenser means includes an aperture through said floor.

23. An infusible material capsule as recited in claim **22** additionally including a spout extending from said floor to a free end for forming a passage from the floor aperture.

24. An infusible material capsule as recited in claim **23** wherein said spout free end is sharpened to rupture said seal.

25. An infusible material capsule as recited in claim **23** wherein said floor is concave to slope to the floor aperture.

26. An infusible material capsule as recited in claim **25** wherein the floor aperture is centered in said floor and said capsule base includes a plurality of angularly spaced, radially extending ribs that channel brewed beverage to said dispenser.

27. An infusible material capsule as recited in claim **26** wherein said capsule additionally includes a filter intermediate said ribs and the infusible material thereby to block the transfer of infusible material through said dispenser.

28. An infusible material capsule as recited in claim **23** wherein said aperture is centered on said floor and said standoff includes a collar spaced from and concentric with said spout.

29. An infusible material capsule as recited in claim **28** wherein said collar terminates in a planar surface that supports said seal.

30. An infusible material capsule as recited in claim **29** wherein said seal comprises a gas impermeable foil attached to said planar surface.

31. An infusible material capsule for use in apparatus for dispensing a brewed beverage into a beverage receptacle wherein the apparatus includes a means for delivering hot water under pressure to said capsule and wherein said capsule comprises:

A) a capsule base formed as an open-ended cavity including a permeable support structure for containing infusible material from which brewed beverage can be dispensed,

B) a cover attached to said capsule base with a pierceable inlet directing hot water from said delivery means into said cavity, said cover sealing said cavity, and

C) a water distribution plate intermediate said cover and the infusible material at a predetermined position in said capsule base cavity for distributing the hot water across the infusible material, said water distribution plate including a positioner that maintains the predetermined position of said water distribution plate in said cavity whereby said water distribution plate can compress a range of infusible material quantities in said cavity.

32. An infusible material capsule as recited in claim **31** said capsule base includes a peripheral wall about said cavity and said positioner means includes a flexible peripheral portion of said water distribution plate that engages said wall thereby to allow movement of said positioner means in said cavity only toward the infusible material.

33. An infusible material capsule as recited in claim **32** wherein said wall is conical at a draft angle, wherein said water distribution plate includes a substantially planar annular portion and wherein said flexible peripheral portion extends from said annular portion and has a J-shape that engages said wall.

34. An infusible material capsule as recited in claim **33** wherein said J-shaped peripheral portion terminates with a feathered edge surface that engages said wall.

35. An infusible material capsule as recited in claim **34** wherein said annular portion includes a plurality of apertures therethrough for enabling the passage of the water therethrough and for confining the infusible material between said permeable support structure in said capsule base and said water distribution plate.

36. An infusible material capsule as recited in claim **35** wherein the brewing apparatus includes a water delivery probe and said cover includes pierceable means for receiving the probe and wherein said cover includes a central structure including radial passages therethrough for directing the water from the probe over the water distribution plate.

37. An infusible material capsule as recited in claim **36** wherein said pierceable means includes a breakout portion in said cover and a surrounding structure that blocks the propagation of any breakage beyond said central structure.

38. An infusible material capsule as recited in claim **36** wherein pierceable means includes a central aperture through said cover for receiving the probe and a gas impermeable foil seal attached to said cover and overlying said central aperture.

39. An infusible material capsule as recited in claim **36** wherein said cover includes a plurality of angularly spaced ribs extending radially from said central structure.

40. An infusible material capsule for use in apparatus for dispensing a brewed beverage into a beverage receptacle wherein the apparatus includes a water delivery probe that delivers hot water under pressure to said capsule and a capsule receiving station wherein said capsule comprises:

A) a capsule base having a side wall, an open end and a dispensing structure and having a floor and ribs that channel brewed beverage to said dispensing structure, said dispensing structure including:

i) a spout extending from said floor to a sharpened free end,

ii) a collar concentric with said spout, and

iii) a seal attached to said collar to overlie said spout to provide a first seal for maintaining the freshness of said infusible material, said seal being ruptured over said sharpened free end as said capsule seats in the capsule receiving station,

B) a filter supported by said ribs,

C) infusible material on said filter,

D) a water distribution plate in said capsule base engaging said side wall to compact said infusible material against said filter and having a plurality of apertures therethrough, and

E) a cover attached to said capsule base at said open end thereby to provide a second seal for maintaining the freshness of said infusible material, said cover having a portion thereof for being penetrated by the water delivery probe to deliver hot water under pressure intermediate said cover and said water distribution plate,

41. An infusible material capsule as recited in claim **40** wherein said capsule base side wall is conical at a draft angle, wherein said water distribution plate includes a substantially planar annular portion and a flexible peripheral portion that extends from said annular portion and has a J-shape that engages said side wall whereby the water distribution plate can be positioned within the cavity to accommodate different quantities of infusible material.

42. An infusible material capsule as recited in claim **41** wherein said J-shaped peripheral portion terminates with a feathered edge surface that engages said wall.

43. An infusible material capsule as recited in claim **40** wherein said cover includes pierceable means for receiving the probe and wherein said cover includes a central structure including radial passages therethrough for directing the water from the probe over the water distribution plate.

44. An infusible material capsule as recited in claim **43** wherein said pierceable means includes a breakout portion in said cover and a surrounding structure that blocks the propagation of any breakage beyond said central structure.

45. An infusible material capsule as recited in claim **43** wherein pierceable means includes a central aperture through said cover for receiving the probe and a gas impermeable foil seal attached to said cover and overlying said central aperture.

46. An infusible material capsule as recited in claim **43** wherein said cover includes a plurality of angularly spaced ribs extending radially from said central structure.

* * * * *