UNITED STATES PATENT AND TRADEMARK OFFICE

BEFORE THE PATENT TRIAL AND APPEAL BOARD

NESPRESSO USA, INC.,
Petitioner,

v.

K-FEE SYSTEM GMBH,
Patent Owner.

Case No. IPR2023-00485
U.S. Patent No. 11,230,430

DECLARATION OF LAURENS HOWLE, PH.D., P.E. IN SUPPORT OF PATENT OWNER'S PRELIMINARY RESPONSE

TABLE OF CONTENTS

I. Introduction and Qualifications 1

II. Materials Considered 5

III. Understanding of Governing Law 6

IV. The Level of Ordinary Skill in the Art and Perspective Applied in this Declaration 7

V. Claim Construction 8

VI. K-fee's Second German Priority Application Supports the '430 Patent's Claims 9

A. The Embodiment of Figures 16, 17, and 18 9

B. Possession of the Claimed Invention 23

DECLARATION OF LAURENS HOWLE

I, Laurens "Lars" Howle, Ph.D., P.E., hereby declare under penalty of perjury that the following statements are made based on my personal knowledge and are true and correct.

I. Introduction and Qualifications

1. I have been retained by McDermott Will & Emery on behalf of K-Fee System Gmbh ("K-fee") to provide an analysis of U.S. Patent No. 11,230,430 (the "'430 Patent"), the applications to which it claims priority, and certain issues raised in IPR2023-00485.

2. I am being compensated at my standard hourly rate of $600 per hour for my time. My compensation is not in any way contingent on my performance, the result of this proceeding, or any of the issues involved therein. I am also being reimbursed for expenses incurred as a result of activities performed as an expert.

3. From 1983 – 1989, I was Plant Manager and Vice President of Manufacturing at Kaye Products, Inc. At Kaye Products, I was responsible for all phases of manufacturing of the physical therapy equipment produced by that company. These responsibilities included, *inter-alia*, production scheduling and line balancing, procurement and inventory maintenance of raw materials, warehousing of completed product, design, installation, and maintenance of

various automated and semi-automated manufacturing processes. At Kaye Products, I had up to 30 direct reports.

4. Also at Kaye Products, I programmed custom bar codes for use in inventory control of more than 250 different raw materials and components. These bar codes were integrated with the custom line-of-business software system I wrote for controlling and tracking product manufacturing.

5. I hold B.S.E., M.S., and Ph.D. degrees from Duke University in the field of Mechanical Engineering. In 1993, I joined the faculty in the Department of Mechanical Engineering and Materials Science as an Assistant Professor. In 2000, I was promoted to Associate Professor with tenure. Later, in 2020, I was promoted to my current rank of Full Professor with tenure.

6. At Duke University, I have taught widely across the undergraduate and graduate curricula. At the undergraduate level, I have taught Mechanical Design, Analysis for Mechanical Design, Modeling and Control of Dynamical Systems, Fluid Mechanics, Heat and Mass Transfer, Wind Turbine Design and Analysis, Advanced Computer Aided Design, Manufacturing Engineering, and Advanced Manufacturing Engineering. At the graduate level, I have taught courses in Wind Turbine Design and Analysis, Introduction to Scientific Computing, Probabilistic Pharmacokinetics and Pharmacodynamics,

Computational Fluid Dynamics and Heat Transfer, Advanced Computational Fluid Dynamics, and Topics in Nonlinear Dynamics.

7. Additionally, I am a Professor of Radiology at the Duke University Medical Center and have previously been a Professor of Marine Science and Conservation at the Duke University Marine Laboratory.

8. In addition, from 2008 to the present, I have been owner and Manager-Member of BelleQuant Engineering, PLLC, a North Carolina based and licensed professional engineering consulting firm (license number P-0774).

9. Through my research at Duke University, my experience in industry, and my consulting activities for numerous Governmental Agencies, and Non-Governmental Originations, I have considerable experience with a wide array of measurement techniques and automated data acquisition methods. Such techniques include optical measurement of flow patterns using shadowgraphy and Schlieren methods, particle image velocity, active feedback control of fluid motions, displacement/angular measurement using potential change, optical gradients, and optical grating methods. Additionally, I have considerable experience designing and using strain gauges, thermocouples, thermistors, photo emitter/detector circuitry, ultrasonic and inductive proximity sensors, Hall effect transducers, piezoelectric elements, pressure transducers, ultrasonic and impellor flow meters, acceleration gauges, and interferometers.

10. In 2020, I was named as a Fellow of the Undersea and Hyperbaric Medical Society. In 2012, I was named as a Fellow of the American Society of Mechanical Engineers. In 2011, a New Product Award was granted at the MCEE expo in Montreal for a product that I designed. In 2009, I was a finalist for a design award from "INDEX: Design to Improve Life," a Danish nonprofit organization.

11. I am the lead inventor on United States Patent No. 9,884,166, titled "Jetless Intravenous Catheters and Mechanical Assist Devices for Hand Injection of Contrast Media During Dynamic Computer Tomography and Methods of Using Same".

12. I have served as an expert witness on more than 20 cases, have testified at trial on seven occasions, and have been deposed six times. Directly related to single-serve beverage brewing systems, I served as an expert and/or testified at trial in the cases 337-TA-929 "Certain beverage brewing capsules, components thereof, and products containing the same", 337-TA-929 (Enforcement and Rescission Proceeding); C15-0522RSL "Eko Brands, LLC v. Adrian Rivera Maynez Enterprises, Inc., et al."; 4:16-cv-2702 "Solofill, LLC v. Adrian Rivera, Adrian Rivera Maynez Enterprises, Inc."; LA CV16-04676 JAK (SSx) Lead Case; LA CV16-04753 JAK (SSx), LA CV16-04706 JAK (SSx), LA CV16-047702 JAK (SSx), "Rivera v. Remington Designs, LLC, Rivera v. Eko

Brands, LLC and Espresso Supply, Inc, Rivera v. Solofill, LLC; Rivera v. Creative Concepts"; and 4:20-cv-03732 "Eko Brands, LLC v. Solofill, LLC and Robert Vu". I have logged more than 1300 hours designing, analyzing, and evaluating single-serve beverage brewing systems.

13. My knowledge, experience, and training meet or exceed to level of a person of ordinary skill in the art for the technical subjects at issue in this litigation (including but not limited to mechanical engineering, fluid delivery devices, thermal and fluids engineering, and product design).

14. Additional information regarding my education and technical experience is included in the Curriculum Vitae, which is attached to this Report as Appendix A.

II. Materials Considered

15. All of the opinions contained in this Declaration are based on the documents I reviewed and my knowledge and professional judgment. In forming the opinions expressed in this Declaration, while drawing on my experience, I reviewed the Petition, the exhibits cited in the Petition, the Patent Owner Preliminary Response, and the exhibits cited in the Patent Owner Preliminary Response. In particular, I reviewed the following documents that are cited in or are otherwise addressed in this declaration:

Exhibit	Description

1001	U.S. Patent No. 11,230,430
1002	Prosecution History of U.S. Patent No. 11,230,430
1046	Official English translation German application No. 102010031988.0 (the "first German application")
1047	Official English translation German application No. 102010044251.8 (the "second German application")
1045	Official English translation of German application No. 102011010534.4 (the "third German application")
1052	*K-Fee System GmbH v. Nespresso USA, Inc. et al.*, Case No. 2:21-cv-3402; Dkt. 111.
1054	*K-Fee System GmbH v. Nespresso USA, Inc. et al.*, Case No. 2:21-cv-3402; Dkt. 211.
	IPR2022-01574, Paper 12 (April 14, 2023)

16. My opinions are additionally guided by my appreciation of how a person of ordinary skill in the art (POSITA) would have understood the claims of the '430 Patent and its earlier-filed applications at the time of the invention.

III. Understanding of Governing Law

17. I am not an attorney and do not have formal legal training. Consequently, I offer no opinion on the law itself. The following understanding of law has been provided to me by counsel. I have applied this understanding in my analysis.

18. I have been informed and understand that a POSITA is a hypothetical person who is presumed to be aware of all pertinent prior art, thinks along conventional wisdom in the art, and is a person of ordinary creativity.

19. I have been informed and understand that a patent is entitled to the filing date of its earlier-filed applications so long as the earlier-filed applications provide written description support by disclosing the claimed invention to a POSITA, with all of the POSITA's knowledge and creativity.

IV. The Level of Ordinary Skill in the Art and Perspective Applied in this Declaration

20. I have reviewed the qualifications that Petitioner contends that a person having ordinary skill in the art ("POSITA") in the related U.S. Patent No. 11,254,491 (the "'491 Patent") would have. I note that the Board, in its Decision Granting Institution of Inter Partes Review of the '491 Patent, adopted Petitioner's definition of the level of ordinary skill, which requires a POSITA to have a bachelor's degree in engineering plus five years of experience in design of mechanical beverage systems, or similar products. I further understand that in adopting the Petitioner's definition of the person of ordinary skill in the art, the Board specifically stated that "we preliminarily adopt Petitioner's definition of the level of ordinary skill, but include that a person having ordinary skill in the art would have had experience with sensors for recognizing an identifier." IPR2022-01574, Paper 12 at 14-15. IPR2022-01574, Paper 12 at 14-15. Additional

education might substitute for some of the experience, and substantial experience might substitute for some of the educational background. For the purposes of this Declaration, I adopt this definition with respect to the ’430 Patent.

21. I would have qualified as a person of at least ordinary skill in the art as of September 2, 2010, and I have a sufficient level of knowledge, experience, and education to provide an expert opinion in the field of the challenged claims of the ’430 Patent.

V. Claim Construction

22. For the purposes of this Declaration, I understand that Petitioner has not proposed formally construing any term of the ’430 Patent, and therefore, the claim terms should be given their plain and ordinary meaning as would be understood by a person of ordinary skill in the art.

23. I have been informed by counsel that Petitioner argued in a related litigation in the District Court that the term “barcode” should be interpreted to mean a “machine readable code consisting of parallel bars of different widths that encode more than only two unique binary characters such as 0 or 1.” Ex. 1052 at 8. The District Court adopted a construction of “[p]lain and ordinary meaning, as further explained before the EPO” in line with Petitioner’s proposal, Ex. 1052 at 11-13, but Patent Owner has appealed the Court’s claim construction. For purposes

of this declaration, I am relying on the construction that Petitioner proposes for this IPR, the plain and ordinary meaning of the term "barcode."

VI. K-fee's Second German Priority Application Supports the '430 Patent's Claims

24. I have been informed that in order for the '430 Patent to be entitled to at least the September 2, 2010 filing date of German application DE 10 2010 044 251.8 (the "second German application"), the claims must find support in that application. In other words, the description in the second German application must indicate to a POSITA that the inventor was in possession of the claimed invention at the time the application was filed.

25. It is my opinion that the second German application provides priority support for at least the independent claim of the '430 Patent for two reasons: (1) a POSITA would have understood that the embodiment disclosed in Figures 16, 17, and 18 of the second German application recite each and every limitation in at least independent claim 1 of the '430 Patent; and (2) a POSITA would have understood that based on at least the disclosure of the second German application the inventor was in possession of the claimed invention.

A. <u>The Embodiment of Figures 16, 17, and 18</u>

45. It is my opinion that Figures 16, 17, and 18 of the second German application and their accompanying descriptions, which show "embodiments of the portion capsule according to figure 16," recite each and every limitation of at least

independent claim 1 of the ’430 Patent. Ex. 1047 at 36. In the Petition, the only limitations that Petitioner alleges to be missing from Figures 16, 17 and 18 are (1) a capsule with a barcode located on the bottom side of the flange, and (2) a capsule with an upper end portion that has an annular convexity and a lower end portion that has an annular concavity relative to the central axis of the base element. Petition at 42-43. Petitioner is incorrect, and both of these features are disclosed in the second German Application. A person of ordinary skill in the art would readily understand and appreciate that the annular convexity and annular concavity are depicted in Figures 16, 17 and 18. A person of ordinary skill in the art would also understand that the embodiment disclosed in Figures 16, 17 and 18 discloses a barcode located on the underside of the flange. In particular, while the embodiment depicted in Figures 16, 17 and 18 is displayed with the formed-fitting toothed ring 2.4.2, the accompanying description is clear that the peripheral region of the capsule can have a “form-fitting and/or friction-fitting means and/or a detection means.” A POSITA would understand that a detection means could be a barcode, as described in the general description of the patent, which could be captured by the sensor, for example, a camera that is placed in the insertion shaft of the coffee machine.

46. The preamble of claim 1 (“[a] beverage system for making a beverage . . .”) finds support in the text accompanying Figures 17a-17c. which describes

various aspects of the beverage system, including a "portion capsule," "retaining arms," "brewing chamber," and "waste container." Ex. 1047 at 42:5-14. The second German application's description of the inventor's goals further supports the preamble: "[t]he present invention relates to a portion capsule for making a beverage . . . ." *See, e.g.*, Ex. 1047 at 30:29-30. Additionally, the general description of the second German application states "[t]he object is achieved by a portion capsule for making a beverage . . . ." *Id.* At 30:21-22; *see also id.* At cl. 1 ("A portion capsule (1) for making a beverage . . . ."); *id.* At Abstract ("The present invention relates to a portion capsule for making a beverage . . . ."). Thus, a POSITA would have understood that the second German application supports the preamble of Claim 1 of the '430 Patent.

47. Figure 16 of the second German application (duplicated below) provides support for claim limitation [1.a], "a single-serve capsule comprising[] a base element with a cavity, in which a raw beverage material is provided," when it discloses "a basic element 2, which in the present case is essentially conical and has a wall 2.1 and a base region 2.2. The raw material . . . [is] provided in this basic element." Ex. 1047 at 41:14-19. A POSITA would have easily understood that the conical basic element necessarily constitutes a cavity in which the raw beverage is located.

48. The general description and claims of the second German application further confirm this understanding. For example, the objective of the invention is described as "relat[ing] to a portion capsule for making a beverage, having a basic element with a cavity, in which a raw beverage material is provided . . . ." Ex. 1047 at 30:3-5; *see also id*. At 30:21-23 ("The object is achieved by a portion capsule for making a beverage, having a basic element with a cavity, in which a raw beverage material is provided . . . ."); *id*. At 30:29-31 ("The present invention relates to a portion capsule for making a beverage or food, having a cavity, in which raw beverage material is provided."). Later in the general description, the second German application describes "a membrane for closing the basic element [which] may be arranged on this peripheral region once the raw material has been introduced into the portion capsule." *Id*. At 34:18-21. Claim 1 provides further support for claim element [1.a] of the '430 Patent. *Id*. At cl. 1 ("A portion capsule (1) for making a beverage, having a basic element (2) with a cavity (3), in which a raw beverage material is provided . . . .").

49. As depicted in Figures 16(a) and 16(b), the beverage capsule contains "[a]n annular peripheral region 2.4," which is "arranged at that end of the basic element which is located opposite the base region 2.2." Ex. 1047 at 41:19-22. The recitation of this feature supports limitation [1.b], "a flange extending outwardly from the base element, the flange comprising a top side and an opposing bottom

side." As depicted in Figure 16(b), the peripheral region or flange has an upper side and an opposing bottom side which extend outwardly from the base element. Figure 2 further confirms that the invention includes a flange extending outwardly from the base element.

50. The second German application's recitation of an "annular peripheral region 2.4, onto which for example a cover sheet is sealed, [] arranged at that end of the basic element which is located opposite the base region 2.2" (Ex. 1047 at 41:19-22) supports claim limitation [1.c], "a cover that is fastened to the top side of the flange to close the cavity."

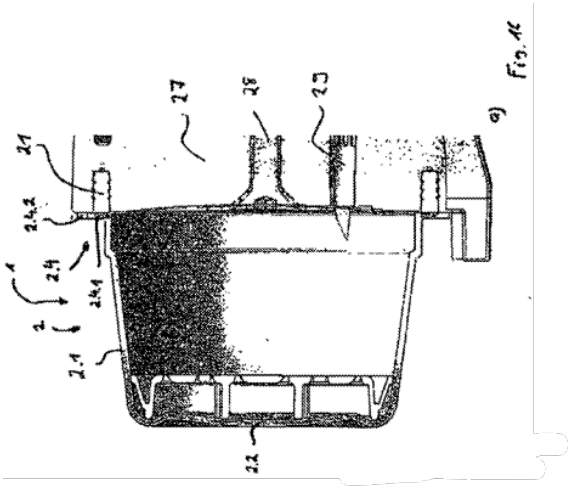

Ex. 1047 at Fig. 16.

51. In my opinion, a POSITA would have understood the embodiment depicted in Figures 16, 17, and 18 and the descriptions accompanying the figures to provide support for claim limitation [1.d], "a barcode provided on the bottom side of the flange." With respect to Figure 16, the application discloses that the

"peripheral region 2.4 has, in its outer region, a ***form-fitting and/or friction-fitting means and/or a detection means 2.4.2***." Ex. 1047 at 41:22-24 (all emphases added); *see also* Figure 16 (above). While the means 2.4.2 can be a toothed ring as depicted in Figures 16 and 17(a), 17(b), and 17(c), a POSITA would have understood that that other "detection means," such as a barcode, could be used interchangeably in the same location. At the very least, a POSITA would have understood from this description of alternative "detection means" that various types of repeat patterns such as a barcode could be placed under the flange of the embodiment of Figures 16-18.

52. In particular, Figure 17c depicts a toothed ring identifier 2.4.2 located on the bottom side of the flange. A POSITA would have understood that Figure 17c is a view from the bottom of a portion capsule (or base region 2.2) looking up at the toothed ring on the bottom side of the flange, where the retaining arms 30 are holding the portion capsule in place. The shaded regions of Figure 17c indicate to a POSITA that the topography of the base region 2.2 includes a concavity. A POSITA would have understood that the toothed ring could easily be replaced by a "detection means 2.4.2," for example, a barcode that could be detected by the sensor in the insertion shaft. *See* Ex. 1047 at 43:11-19. Indeed, in a description of the different identifiers that could be used with the portion capsule, the application

describes that "[t]he identifier is further preferably a machine-readable print," and the "print is preferably a barcode, a logo or a repeat pattern." Ex. 1047 at 33:6-7.

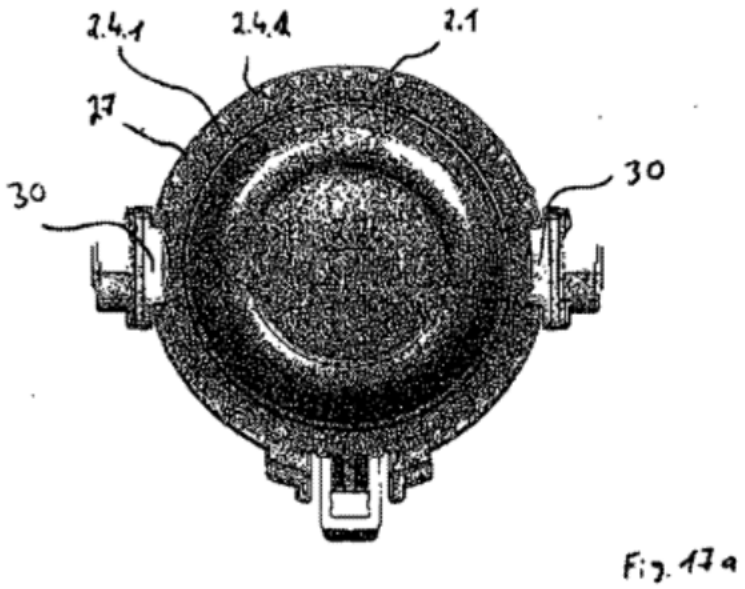

Ex. 1047 at Fig. 17a.

53. Claim limitation [1.e], "a beverage machine comprising: a sensor/detector configured to read the barcode," finds support in the second German application's description of the above-mentioned form-fitting, friction-fitting, and/or detection means 2.4.2, an element of the embodiment of Figure 16. Specifically, the means 2.4.2 can "be sensed by a detector, in order to establish whether the respective portion capsule is suitable for the respective coffee machine." Ex. 1047 at 35:3-6. In describing the embodiment depicted in Figures 16, 17 and 18, the application explains that "[a] person skilled in the art is also aware that for example the insertion shaft may also contain a sensor, for example, a

camera . . . .” *Id*. At 43:11-12. Figure 2 and the associated description provides additional support for the location of the detector. *Id*. At 38:11-27. I understand that in adopting the Petitioner’s definition of the person of ordinary skill in the art, the Board specifically stated that “we preliminarily adopt Petitioner’s definition of the level of ordinary skill, ***but include that a person having ordinary skill in the art would have had experience with sensors for recognizing an identifier***.” IPR2022-01574, Paper 12 at 14-15 (emphasis added). A person of ordinary skill in the art, having experience with sensors for recognizing an identifier, as required by the Board, would understand that the terms “sensor” and “camera” recited with respect to Figures 16, 17 and 18 would be particularly relevant to barcodes and similar printed codes.

54. The second German application also provides support for claim limitation [1.f] (“a brewing chamber configured to receive the base element of the single-serve capsule and having an end portion that opposes the bottom side of the flange”) in Figure 16. Figure 16 depicts a brewing chamber 27 and a seal 21, “which is arranged on the brewing chamber 27.” Ex. 1047 at 41:30-31. A POSITA looking at Figure 16 would have understood from the depiction that the bottom of the beverage capsule, or base element, has been received into the brewing chamber, which itself has an end portion that opposes the bottom side of the flange.

55. Figure 1 provides further support for this limitation when it states that the coffee capsule "is introduced into a brewing chamber 12 (illustrated schematically here)." Ex. 1047 at 37:9-10. The brewing chamber depicted here similarly receives the base element, as indicated by the large arrow at the bottom of the figure. The end portion or bottom of the brewing chamber does indeed oppose the bottom side of the flange.

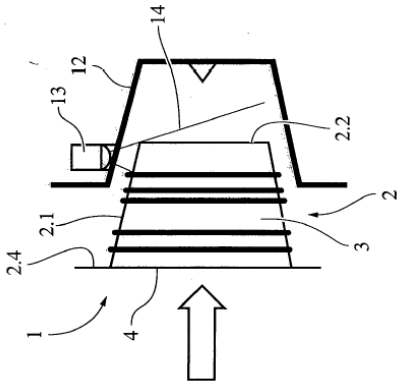

Ex. 1047 at Fig. 1.

56. The description accompanying Figure 16 describes "a pump controlled to supply water into the single-serve capsule" (limitation [1.g]). Specifically, the accompanying text describes the flow of water through a water inlet 28 and into the capsule, and then out through the opening made by a mandrel or piercing spike. Ex. 1047 at 41. A POSITA would have understood from the text and an understanding of the structure of the beverage system that a pump is necessary to supply the water from the water inlet 28 into the capsule. Additionally, the general description in the application describes a "pressure

pump" of a coffee machine "which makes the water available" to the capsule. *Id*. At 31:33-34.

57. The limitation [1.h], "wherein the single-serve capsule is free of a filter that is located inside of the cavity," is supported by the description accompanying Figure 16 that "[t]he raw material and, if appropriate, inserts, in this case a filter, are provided in this basic element." Ex. 1047 at 41:17-19. A POSITA would have understood that a filter-free capsule would be appropriate in some scenarios, such as reconstitution of dehydrated beverages such as cider or cocoa, and a filter would be advantageous in the extraction process for other beverages, such as coffee or tea. The second German application explicitly discloses these alternatives when it describes that "[t]he raw beverage material here ***undergoes extraction***, or ***is dissolved***, to give the desired beverage." *Id*. At 37:12-14 (emphasis added).

58. Figure 16 additionally supports the limitation "the single-serve capsule also comprises: (i) an upper end portion that has an annular convexity and a lower end portion that has an annular concavity relative to the central axis of the based element" ([1.i]). A POSITA would have understood that the cover depicted in Figure 16 (an upper end portion) is bowed outwardly, i.e., has an annular convexity.

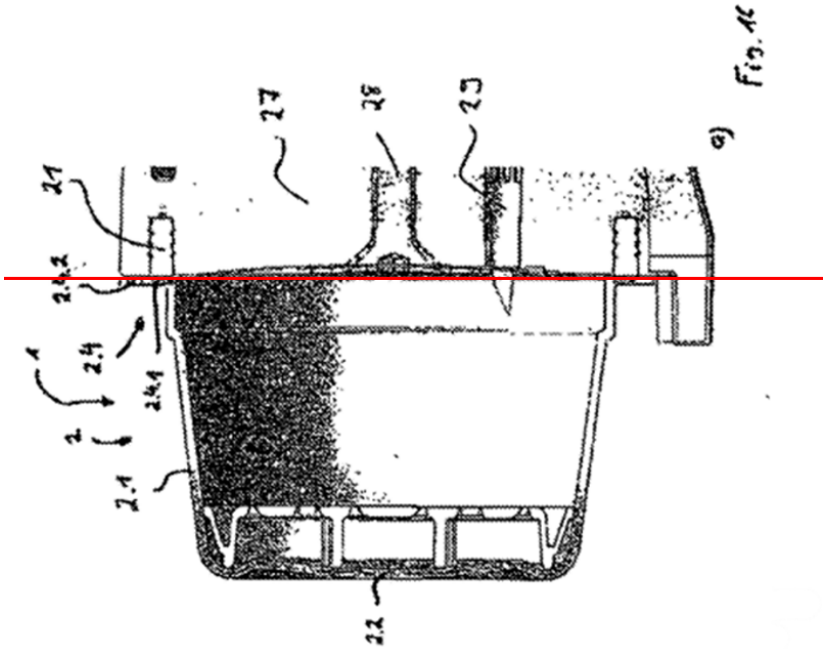

Ex. 1047 at Fig. 16 (annotated). A POSITA would have also understood that the bottom of the portion capsule (or lower end portion) has a concavity relative to the central axis of the base element. Indeed, a POSITA would understand the shaded region of Figure 17a (annotated below) to depict the concavity.

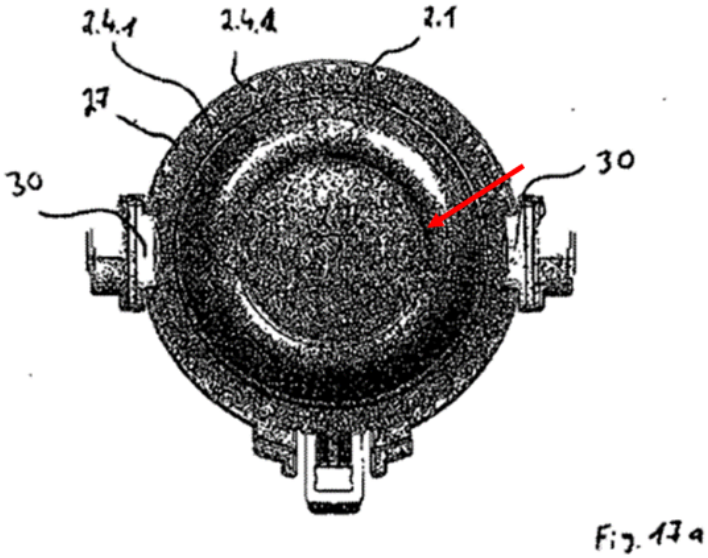

Ex. 1047 at Fig. 17a.

59. A POSITA would have also understood that while an intact portion capsule could have an annular convexity relative to the central axis because of, for example, differential pressure inside and outside of the capsule, once the capsule's top is pierced by the mandrel and/or the water inlet feature, air would escape and the foil cover could then become flattened.

60. A POSITA would have understood the second German application's recitation of "[a]n annular peripheral region 2.4, onto which for example ***a cover sheet is sealed***" to support limitation [1.j], "a barrier layer to prevent moisture or aroma from escaping out of the single-serve capsule." Ex. 1047 at 41:19-20 (emphasis added). A POSITA would have understood that the sealing of the cover sheet onto the peripheral region 2.4 is one way to prevent the escape of moisture or aroma. Additionally, the general description itself describes that "any barrier layer which may be present in the portion-capsule material [], for example, prevents moisture or aroma from escaping from the capsule." Ex. 1047 at 32:20-23.

61. Further, the limitation [1.k], "wherein the beverage machine also comprises: (i) a mandrel that is configured to pierce the cover in a region that is offset from the central axis of the base element" is supported by the depiction in Figure 16 of a spike 29 that produces an opening in the capsule through which water can flow. Ex. 1047 at 41:31-35, Fig. 16.

62. The limitation [1.l], "(ii) a seal that is configured to seal against the cover in a region between a peripheral edge of the flange and the region of the cover that is pierced by the mandrel," is supported by the description of Figure 16 of "a sealing surface 2.4.1" on the peripheral region 2.4, that "interacts with sealing action with a seal 21, which is arranged on the brewing chamber 27." Ex. 1047 at 41:27-31. As depicted in Figure 16, the sealing surface 2.4.1 is sealed in a region between the edge of the flange and the piercing spike.

63. The "pair of holding arms for engaging the single-service capsule" claimed in limitation [1.m] is supported by Figures 17a, 17b, and 17c, which each show "how the portion capsule 1 is retained on a part of the brewing chamber 27 by means of two retaining arms 30." Ex. 1047 at 42:6-8. The retaining arms interact with part of the capsule. *Id*. Without this interaction retaining the capsule, the capsule would drop through into the waste container. *Id*.

64. The "waste container" into which capsules "would drop through" absent the retention of the capsule by the retaining arm supports the limitation [1.n], "a dropping box for the single-serve capsule to fall into." Ex. 1047 at 42:7-12. Specifically, the second German application explains with respect to Figures 17a-17c that the "retaining arms 30 interact with the means 2.4.2. If this means was not present, the retaining arms could not retain the capsule and the capsule, rather

than being introduced into the brewing chamber, would drop through into a waste container." Ex 1047 at 42:8-12.

65. Finally, a POSITA would have understood the second German application to support "wherein the pump is controlled to push the water into the single-serve capsule only upon a determination that the read barcode agrees with a stored reference" (limitation [1.o]). I previously discussed my opinion that a POSITA would have understood the "form-fitting, friction-fitting and/or detection means [2.4.2] to be sensed by a detector" to encompass features such as a barcode, or the toothed ring explicitly illustrated in Figures 16, 17, and 18. *See supra* ¶¶51-52. The description of Figure 16 further describes that the insertion shaft may detect the shape of the form-fitting, friction-fitting, and/or detection means 2.4.2, and the "signal, in turn, is passed to a ***control means***, which frees, for example, the brewing chamber if the capsule is the correct one." Ex. 1047 at 43:16-19 (emphasis added).

66. Further, the general description in the application confirms this understanding when it states that "[a] sensor/detection means provided on the coffee machine preferably senses this identifier and compares it preferably with a stored identifier. The coffee machine, in particular, the pressure pump thereof, which makes the water available, can preferably be operated only when the identifier determined coincides with the reference identifier. Otherwise, the coffee

machine cannot be operated." Ex. 1047 at 31:29-36; *see also id*. at 38:3-6 ("For the case where these identifiers do not coincide, in particular operation of the pump which forces, for example, hot water through the brewing is prevented."); 33:25-30 ("the identifier makes it possible for the coffee machine…to set the beverage-making or food-making process, i.e. for example the quantity of water, the pressure thereof and/or the temperature thereof.").

67. Thus, for at least the reasons I explained above, it is my opinion that a POSITA reading the second German application would have understood each limitation of claim 1 of the '430 to be recited in at least Figure 16, 17, and 18 and/or their associated descriptions.

B. <u>Possession of the Claimed Invention</u>

68. In my opinion, each and every one of the claim limitations in the '430 Patent are supported by a single embodiment depicted in Figures 16, 17, and 18 and their accompanying descriptions. To the extent that one might argue that a single embodiment does not show all of the claim limitations, it is my opinion that a POSITA reading the second German application would have understood that it describes a capsule having various features that are intended to work in each of the described embodiments.

69. In teaching that "[w]hat has been said in relation to the identifier applies to all other examples," the second German application provides specific

disclosure of how this specific element, the identifier, can be combined with different capsule embodiments. Ex. 1047 at 38:8-9. A POSITA would have understood this teaching to encourage the combination of the elements described in each of the embodiments, and particularly the identifiers, of various capsule embodiments. A person of ordinary skill in the art reviewing the specification would immediately appreciate that the inventor was identifying various possible configurations of capsules, and not attempting to describe static and discrete embodiments that were somehow unrelated to one another. The different features and embodiments disclosed in the second German application are not mutually exclusive and are clearly intended to build on and work with one another. The insubstantial variations among the embodiments clearly inform one of skill in the art that features from one embodiment could be used with another.

70. For example, in describing Figures 16, 17, and 18, the second German application states that "a form-fitting and/or friction-fitting means and/or a detection means 2.4.2" is located on the outer region of the peripheral region 2.4. Ex. 1047 at 41:23-24. This location – the outer peripheral region 2.4 – is precisely the same location with respect to the identifier that is disclosed with respect to Figure 2. A POSITA would understand that the second German application was depicting alternative mechanisms for identification located on the flange of the capsule. In addition, while Figures 16, 17 and 18 particularly depict a toothed ring

"form-fitting means" located on the underside of the flange, the application specifically discloses and a POSITA would have understood that other "detection means" (such as a barcode) could be used in the same location and for the same purpose. By describing these alternatives, the inventor was clearly describing the flexibility of its embodiments, which provides a POSITA with sufficient information to conclude that the inventor was in possession of the beverage system of claim 1 of the '430 Patent.

71. A POSITA would have specifically understood that the capsule periphery could have provided on it a detection means, such as a barcode, located on the bottom of the flange. That location is described with respect to Figure 2. The form-fitting toothed ring described in Figures 16, 17, and 18 is also located on the bottom of the flange. That is evident from Figures 17a-c that depicts the capsule from the bottom. The second German application is clear that an alternative to the form-fitting means is a detection means. A POSITA would have understood that one example of a detection means could be a barcode. *See* Ex. 1047 at 33:1-2, 33:6-7 ("The identifier is further preferably a machine-readable print," and the "print is preferably a barcode, a logo or a repeat pattern"). A POSITA would therefore understand that the inventor possessed all of the features described with respect to Figures 16, 17 and 18, including a barcode located on the bottom of the flange. The second German application's specific intention and

guidance to combine the teachings regarding the identifier with all other examples, provides yet additional evidence that the inventor had possession of the claims at the time of the second German application's filing.

72. Additionally, a POSITA would have understood the claims of the second German application to show how features from across the scope of examples could be included in the various examples. Claim 1 of the second German application broadly describes a portion capsule for making a beverage. Claim 11 of the application adds an additional feature to the portion capsule, reciting "The portion capsule (1) ***as claimed in one of the preceding patent claims***, characterized in that the identifier is a barcode (17)." Ex. 1047 at cl. 11 (emphasis added). A POSITA would have understood this claim to encourage replacing the identifier in any previously-claimed embodiment with a barcode identifier. In particular, a POSITA reviewing the claims and reviewing the overall description in the second German application would readily understand that the inventor was in possession of a capsule having the features described in the embodiment of Figures 16, 17 and 18 with a barcode on the underside of the flange. The claims thus demonstrate possession of subject matter arising from combinations of embodiments, and in particular the identifier element.

I hereby declare that all statements made herein of my own knowledge are true and that all statements made herein on information and belief are believed to be true. Further, these statements were made with the knowledge that willful false statements and the like so made are punishable by fine, imprisonment, or both, under Section 1001 of Title 18 of the United States Code, and that such willful false statements may jeopardize the validity of the above-identified patent.

Laurens Howle, Ph.D., P.E.

Date 4/16/2023