Petitioner's Demonstratives

Nespresso USA, Inc. v. K-fee System GmbH

IPR2023-00485
U.S. Patent No. 11,230,430

IPR2023-00502
U.S. Patent No. 10,994,923

June 12, 2024

Table of Contents

1. Background on the ’430 and ’923 Patents……Slide 3
2. The ’430 and ’923 Patents are Unpatentable as Obvious……Slide 8
   a) Yoakim discloses a capsule “free of a filter” ……Slide 15
   b) Rapparini discloses “grooves free from extending to the bottom region” (only ’923) ”……Slide 28
   c) Yoakim, combined with Rapparini, discloses “turbulence of water in the cavity” (only ’923)……Slide 48
   d) Yoakim, combined with Rossi, discloses “pump control” (only ’430) ……Slide 60
   e) Yoakim discloses “sidewall indentations” (only ’430) ……Slide 76
   f) A POSITA would be motivated to combine the cited prior art references ……Slide 85
3. K-fee’s Foreign Priority Documents Do Not Support the Challenged Claims ……Slide 107
   ’430 Patent ……Slide 108
   ’923 Patent……Slide 145
4. Howle is not a POSITA ……Slide 158

Overview of the ’430 Patent and the ’923 Patent

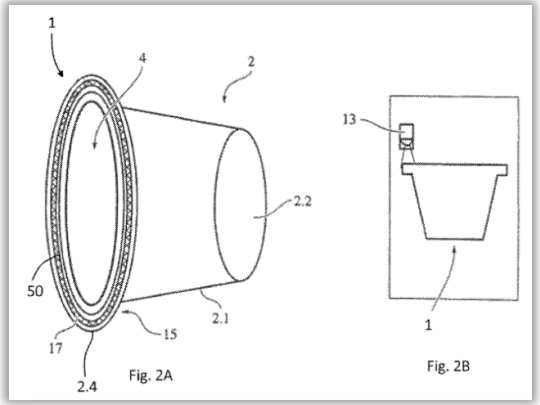

Fig. 2A

Fig. 2B

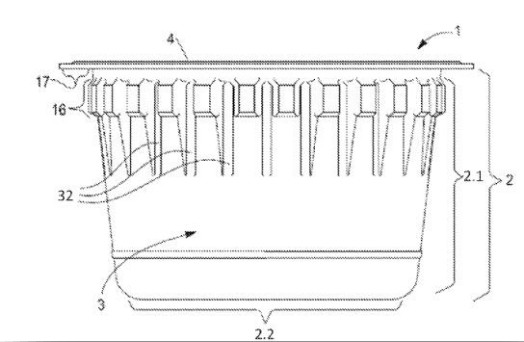

The object of the present invention is therefore to provide a portion capsule which only is suitable for a specific coffee machine.

The object is accomplished according to the present invention by a portion capsule for producing a beverage, comprising a base element having a cavity in which a beverage raw material is provided and which is closed by a membrane fastened to the base element, wherein it has an identifier, which allows to individualize the respective portion capsule.

’430 Patent (EX1001), 1: 22-24, 28-34, FIGs. 2 and 19;
’923 Patent (EX1001), 1: 22-24, 28-34, FIGs. 2 and 19.

Technology Background: Capsule Identification Using Barcodes

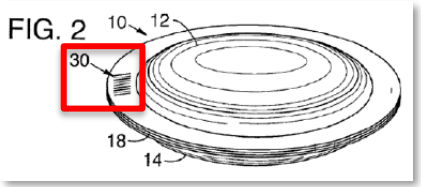

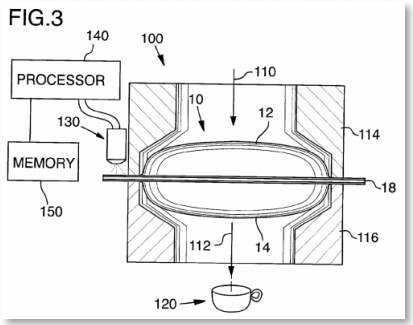

Barcode-Based Capsule Identification
(EX1037, Boyd, FIGs. 2-3)

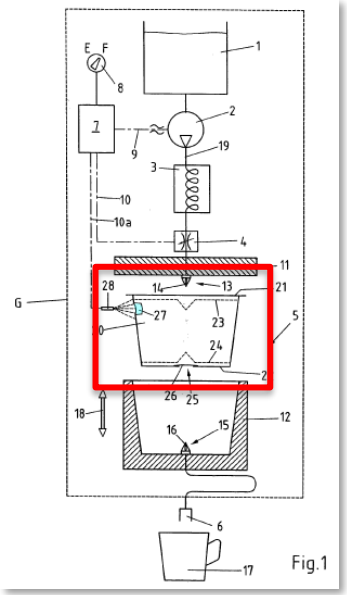

Controlling Extraction Parameters Using a Label or Marking Like a Barcode
(EX1039, Schifferle, FIG. 1)

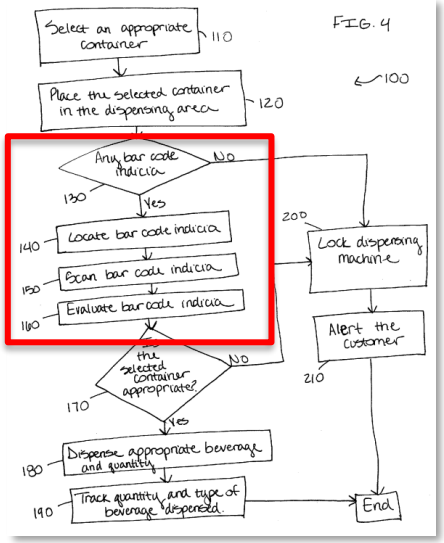

System Based on Barcode Result
(EX1042, Lillard, FIG. 4)

Petition '430 Patent (Paper 1), 8-12;
Jobin Decl. '430 Patent (EX1003), ¶¶97-110;
Petition '923 Patent (Paper 1), 9-12;
Jobin Decl. '923 Patent (EX1003), ¶¶97-110.

Technology Background: Pump Control Was Well-Known in Single-Serve Beverage Machines

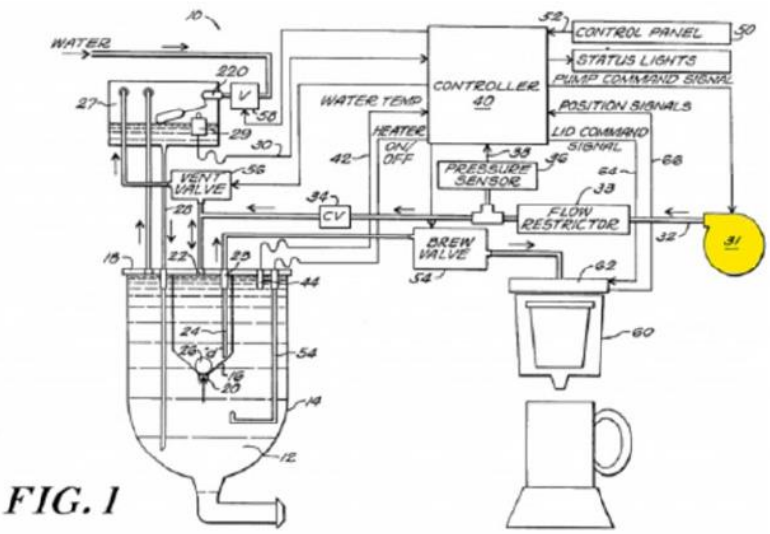

FIG. 1

Ex. 1019, Beaulieu at FIG. 1.

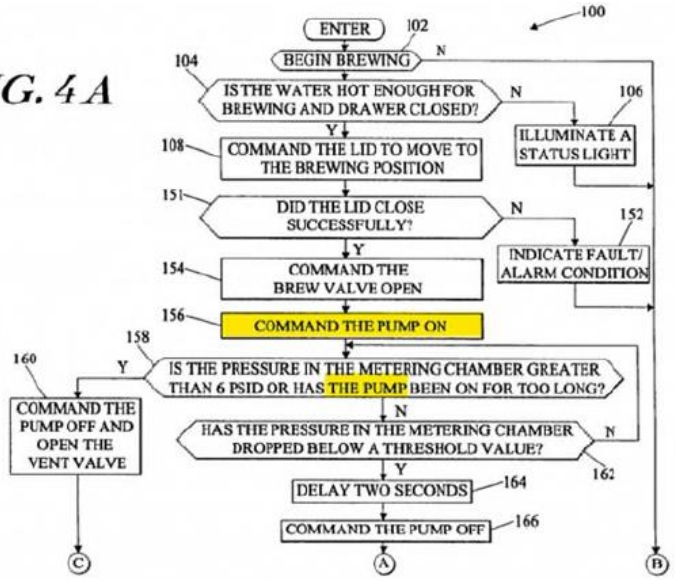

FIG. 4A

Ex. 1019, Beaulieu at FIG. 4A.

<u>Pumps in Single-Serve Machines</u>
(EX1019, Beaulieu, Figures 1, 4A)

Petition '430 Patent (Paper 1), 4;
Petition '923 Patent (Paper 1), 3.

Technology Background: Ribs, Grooves and Turbulent Flow in the Prior Art

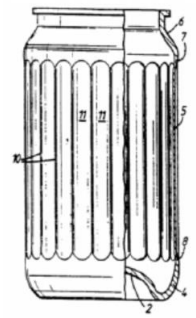

(EX1031, Claydon, FIG. 3)

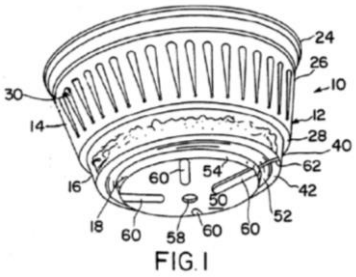

(EX1032, Erickson, FIG. 1)

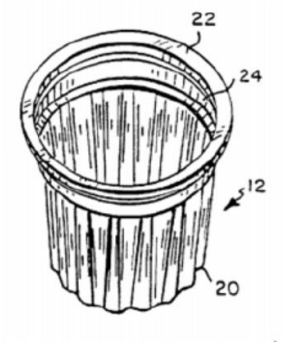

(EX1033, Sweeney, FIG. 2)

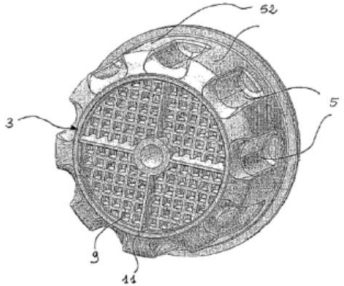

(EX1034, Rubino, FIG. 2)

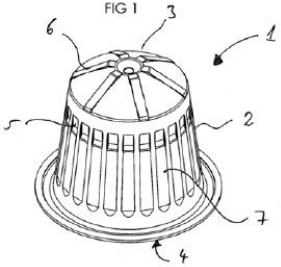

(EX1035, Mariller, FIG. 1)

Petition '430 Patent (Paper 1), 6-8;
Petition '923 Patent (Paper 1), 6-8.

Institution Grounds

’430 Patent

Ground	Claims	Statutory Basis
1	1-10	35 U.S.C. §103 over US 2010/0239734 to Yoakim in view of US 2013/0064937 to Jarisch in view of WO 2010/099806 to Rossi in further view of US 2008/0105131 to Castellani.

’923 Patent

Ground	Claims	Statutory Basis
1	1-16	35 U.S.C. §103: US 2010/0239734 to Yoakim in view of US 2013/0064937 to Jarisch in further view of US 2012/0269933 to Rapparini

Petition ’430 Patent (Paper 1), 33;
Petition ’923 Patent (Paper 1), 35.

The ’430 and ’923 Patents Are Unpatentable as Obvious

Overlapping Issues

<u>’430 Patent and ’923 Patent</u>

- Free of a filter is disclosed
- Motivation to combine Yoakim and Jarisch
- Howle is not a POSITA

Separate Issues

<u>’430 Patent</u>

- Rossi’s pump control and motivation to combine
- Sidewall indentations

<u>’923 Patent</u>

- Rapparini’s grooves and motivation to combine
- Turbulent flow

Claim 1 of the ’430 Patent

1.	A beverage system for making a beverage, comprising:
[1.a]	a single-serve capsule comprising: a base element with a cavity, in which a raw beverage material is provided
[1.b]	a flange extending outwardly from the base element, the flange comprising a top side and an opposing bottom side;
[1.c]	a cover that is fastened to the top side of the flange to close the cavity;
[1.d]	and a barcode provided on the bottom side of the flange; and
[1.e]	a beverage machine comprising: a sensor/detector configured to read the barcode;
[1.f]	a brewing chamber configured to receive the base element of the single-serve capsule and having an end portion that opposes the bottom side of the flange; and
[1.g]	a pump controlled to supply water into the single-serve capsule;
[1.h]	**wherein the single-serve capsule is free of a filter that is located inside of the cavity**,
[1.i]	the single-serve capsule also comprises: (i) an upper end portion that has an annular convexity and a lower end portion that has an annular concavity relative to the central axis of the base element; and
[1.j]	(ii) a barrier layer to prevent moisture or aroma from escaping out of the single-serve capsule;
[1.k]	wherein the beverage machine also comprises: (i) a mandrel that is configured to pierce the cover in a region that is offset from the central axis of the base element;
[1.l]	(ii) a seal that is configured to seal against the cover in a region between a peripheral edge of the flange and the region of the cover that is pierced by the mandrel;
[1.m]	(iii) a pair of holding arms for engaging the single-serve capsule; and
[1.n]	(iv) a dropping box for the single-serve capsule to fall into;
[1.o]	**wherein the pump is controlled to push the water into the single-serve capsule only upon a determination that the read barcode agrees with a stored reference.**

’430 Patent (EX1001), claim 1.

Claim 7 of the ’430 Patent

7.	A beverage system for making a beverage, comprising:
[7.a]	a single-serve capsule comprising: a base element with a cavity, in which a raw beverage material is provided,
[7.b]	a flange extending outwardly from the base element, the flange comprising a top side and an opposing bottom side;
[7.c]	a cover that is fastened to the top side of the flange to close the cavity;
[7.d]	and an identifier provided on the bottom side of the flange, the identifier being a barcode; and
[7.e]	a beverage machine comprising: a sensor/detector,
[7.f]	a brewing chamber configured to receive the base element of the single-serve capsule and having an end portion that opposes the bottom side of the flange; and
[7.g]	a pump controlled to supply water into the single-serve capsule;
[7.h]	**wherein the single-serve capsule is free of a filter that is located inside of the cavity,**
[7.i]	the single-serve capsule also comprises: (i) an upper end portion that has an annular convexity and a lower end portion that has an annular concavity relative to the central axis of the base element;
[7.j]	(ii) a barrier layer to prevent moisture or aroma from escaping out of the single-serve capsule; and
[7.k]	**(iii) a side wall having indentations;**
[7.l]	wherein the beverage machine also comprises: (i) a mandrel that is configured to pierce the cover in a region that is offset from the central axis of the base element;
[7.m]	(ii) a seal that is configured to seal against the cover in a region between a peripheral edge of the flange and the region of the cover that is pierced by the mandrel;

’430 Patent (EX1001), claim 7.

Claim 7 of the ’430 Patent (Cont’d)

[7.n]	(iii) a pair of holding arms for engaging opposite sides of the single-serve capsule; and
[7.o]	(iv) a dropping box for the single-serve capsule to fall into;
[7.p]	wherein the beverage machine, by reading or detecting the identifier with the sensor/detector, is configured to determine if the single-serve capsule belongs to a group of single serve capsules operable for use with the beverage machine, and **only if the beverage machine determines that the single-serve capsule belongs to the group of single serve capsules operable for use with the beverage machine is the pump controlled to push the water into the single-serve capsule.**

’430 Patent (EX1001), claim 7.

Claims 1 and 7 of the ’923 Patent

1.	Single-serve capsule for making a beverage, having
[1.a]	a base element made of metal
[1.b]	**with a cavity that is free of a filter,**
[1.c]	and in which a raw beverage material is provided,
[1.d]	the cavity including radially spaced and vertically oriented ribs,
[1.e]	the capsule having a flange which is provided on the base element,
[1.f]	and the cavity being closed by a metal cover, which is fastened on a top side of the flange,
[1.g]	the base element comprises a wall region extending between the flange and a bottom region of the base element,
[1.h]	the wall region includes radially spaced and vertically oriented grooves that are **free from extending entirely to the bottom region**,
[1.i]	wherein the capsule has an identifier, which makes it possible to individualize the respective single-serve capsule, and
[1.j]	the identifier is a barcode provided on a bottom side of the flange which is directed away from the metal cover.

[7.]	The single-serve capsule according to claim 1, wherein the cavity has grooves defined between the ribs, **and the grooves in the cavity generate turbulence of water in the cavity**.

’923 Patent (EX1001), claims 1 and 7.

Free of a Filter in the Cavity Limitation

’430 Patent

Claim element [1.h]/[7h]: wherein the single-serve capsule is **free of a filter** that is located **inside of the cavity**,

’923 Patent

Claim 1: Single-serve capsule for making a beverage, having […] with **a cavity that is free of a filter** […]

Claim 10: The single-serve capsule according to claim 9, wherein […] **the cavity is free of a filter**

’430 Patent (Ex.1001), claims 1, 7;
’923 Patent (Ex.1001), claims 1, 10.

Free of a Filter Inside the Cavity – Disputed Issues

- Yoakim meets the "free of a filter" limitation by disclosing that filters inside the capsule cavity are *optional/alternative* features
- Yoakim's capsules do not require a filter

POR '430 Patent (Paper 15), 10-15;
POR '923 Patent (Paper 15), 20-27;
Reply '430 Patent (Paper 18), 9-13;
Reply '923 Patent (Paper 18), 6-10.

Free of a Filter Inside the Cavity – Alternative Optional Features Satisfy Negative Limitations

"The question that remains is whether properly describing alternative features—without articulating advantages or disadvantages of each feature—can constitute a 'reason to exclude' under the standard articulated in Santarus. ***We hold that it can****."*

Inphi Corp. v. Netlist Inc., 805 F.3d 1350, 1355 (Fed. Cir. 2015) (emphasis added)

"If alternative elements are positively recited in the specification, they may be explicitly excluded in the claims."

MPEP 2173.05(i)

Reply '430 Patent (Paper 18), 10;
Reply '923 Patent (Paper 18), 7.

Free of a Filter Inside the Cavity – Yoakim and the Challenged Patents Both Disclose Optional Filters

Yoakim

[0171] In this mode, premade radial outlets for the brewed liquid are provided in the capsule. For instance, a series of slits are provided in the lid and/or body. When the capsule is driven in rotation, the brewed liquid can pass through the slits whereas the solid particles are retained in the capsule. An additional filtering layer can be used to filter the liquid depending on the size of the outlets.

[0461] (Excerpt):

around central axis AA of the capsule. Optionally, the capsule may comprise a filter part **708** delimiting the cavity **709** for the substance and a collecting recess **710** peripherally placed relative to the central cavity. The filter part may, for instance, be an integral part of the body **705** or a part which is added in the capsule, e.g., a filter cylinder. The centrifuged liquid

'430 Patent/ '923 Patent

using a sealing and/or an adhesive bonding. Additionally the cavity could contain one or several built-in elements, such as, for example a filter, a non-woven, a felt, a shut-off device and/or something similar to those. For the case that a non-woven and a felt are arranged within the cavity, they are interconnected preferably. The non-woven and/or the felt can be made of several layers in such a way that the layers may differ in the kind of its starting material and/or its preparation. Moreover the membrane and/or the bottom can be provided with a plurality of recesses (holes).

'430 and '923 Patents (EX1001), 1:50-52

Yoakim (EX1004), [0171], [0461];
Reply '430 Patent (Paper 18), 10-12;
Reply '923 Patent (Paper 18), 8-9.

Free of a Filter Inside the Cavity – Howle Relies on EX1047's *Optional* Filter to Support The "Free of a Filter" Limitation

provides support via two holding arms. Ex. 1047 at 8-9. The second German application also describes an optional filter element for the portion capsule. *See id.* at 12:17-19 ("The raw material and, ***if appropriate***, inserts, in this case a filter, are provided in this basic element.") (emphasis added).

Howle Decl. '923 Patent (EX2017), ¶41

Howle Decl. '430 Patent (EX2017), ¶79;
Reply '430 Patent (Paper 18), 10;
Reply '923 Patent (Paper 18), 7.

Free of a Filter Inside the Cavity – K-fee's Optional Filter is Shown in the Cavity

Figure 16 shows a further embodiment of the portion capsule 1 according to the invention. This capsule has a basic element 2, which in the present case is essentially conical and has a wall 2.1 and a base region 2.2. The raw material and, if appropriate, inserts, in this case a filter, are provided in this basic element. An annular peripheral region 2.4, onto

Sept. 2010 App. (EX1047); 41:13-19

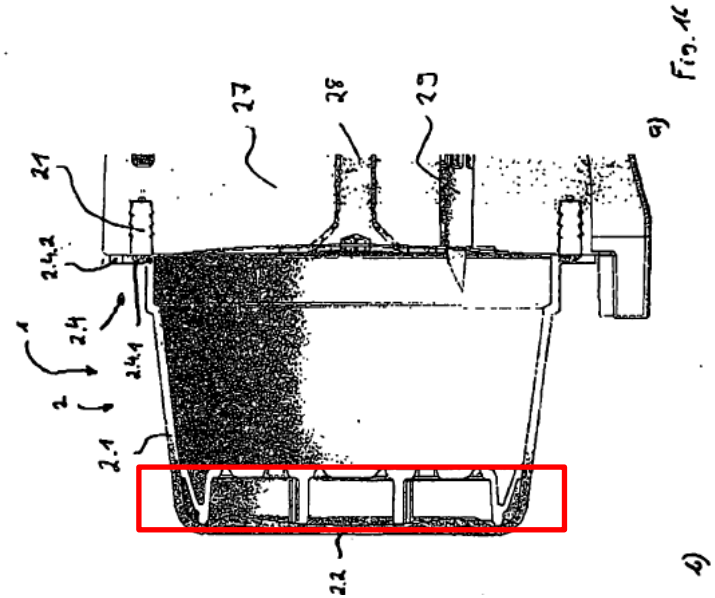

Sept. 2010 App. (EX1047); FIG. 16 (annotated)

Howle Decl. for IPR2023-00485 '923 Patent (EX1071), ¶57;
Reply '923 Patent (Paper 18), 7.

Free of a Filter Inside the Cavity – A Filter in the Cavity is Optional in Yoakim

A filter *could be* present in:

In the sidewall	**[0288]** The capsule may comprise a filter means to filter the centrifuged before the liquid is released from the outlets at the sidewall.
In the machine/device	degrees. In another mode, the filter could be part of the device or be formed by the puncturable membrane and piercing members.
In the lid	porous membrane **720**. Thus, the lid **108** which is inserted in the dished body **102** comprises a circumferential band of a porous material. The porous material provides restriction of the flow, creating a certain pressure drop, e.g., between 0.5 and 4 bar, and leading to a filtering of the solid particles. In

Yoakim (EX1004), [0288], [0271], [0448]

Reply '430 Patent (Paper 18), 12-13;
Reply '923 Patent (Paper 18), 10.

Free of a Filter Inside the Cavity – The Optional Additional Filtering Layer in [0171] Is Not In Addition to Other Filters In the Cavity

[0171] In this mode, premade radial outlets for the brewed liquid are provided in the capsule. For instance, a series of slits are provided in the lid and/or body. When the capsule is driven in rotation, the brewed liquid can pass through the slits whereas the solid particles are retained in the capsule. An additional filtering layer can be used to filter the liquid depending on the size of the outlets.

Yoakim (EX1004), [0171]

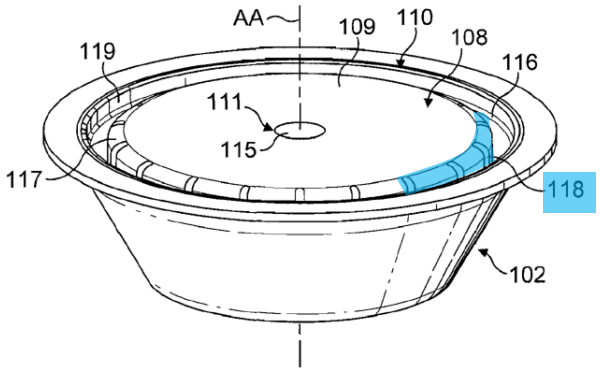

FIG. 29

Yoakim (EX1004), FIG. 29

Reply '430 Patent (Paper 18), 10-12;
Reply '923 Patent (Paper 18), 8-10.

Free of a Filter Inside the Cavity – A POSITA Would Not Have Understood [0171] to Describe Multiple Filtering Layers

Q. Well, it's an additional filtering layer, correct?

THE WITNESS: What 171 is describing in this embodiment is radial outlets for brewed liquid. That is not a filtering layer.

Jobin Depo Tr. (EX2019),57:23-58:5

Reply '430 Patent (Paper 18), 11;
Reply '923 Patent (Paper 18), 8.

Free of a Filter Inside the Cavity – Even Howle Does Not Support K-fee's New Sur-Reply Interpretation of "Cavity"

K-fee argues:

The capsule cover's slits are inside the cavity

side of the flange to close the cavity." Ex.1001, cls. 1, 7. In Yoakim, the premade slits are beneath the top side of the flange and thus are in the cavity. *See, e.g.*, Ex.1004, Fig. 29 (below).

Sur-Reply '430 Patent (Paper 19), 20-21

Howle says:

Q. In the context of the '430 and '923 patents, is the cover of the capsule in the cavity?

THE WITNESS: In both of these patents the cover is part of what defines the boundary of the capsule.

Q. Okay. Is something that defines the boundary of the cavity inside the cavity?

A. It is neither inside nor outside. It is the boundary.

Howle Depo. Tr. (EX1067), 49:19-50:5

Sur-Reply '923 Patent (Paper 19), 17.

Free of a Filter Inside the Cavity – K-fee's Expert Cannot Explain Why A Filter Would Be Necessary

Howle cannot explain how the '430 or '923 Patent systems could work without a filter or the benefits of not using a filter

Q. In your opinion, how would the system in Figure 16 brew a beverage without a filter?

THE WITNESS: I have formed no opinion on that matter.

Howle Depo. Tr. (EX1067), 66:23-25

Q. Sitting here today, are you aware of any benefit to not having a filter in the capsule?

A. So I have not formed an opinion on that matter.

Howle Depo. Tr. (EX1067), 68:5-12

Reply '430 Patent (Paper 18), 12;
Reply '923 Patent (Paper 18), 9-10.

Free of a Filter Inside the Cavity – K-fee Cites a Plethora of Yoakim Paragraphs and Figures in its Patent Owner Response

To support its "free of a filter" arguments, K-fee cites the following portions of Yoakim in its POR:

[0010]; [0011]; [0012]; [0016]; [0017]; [0030]; [0080]; [0081];[0083]; [0113]; [0131]; [0139];[0171]; [0210];[0255]; [0265]; [0266]; [0271]; [0272]; [0288];[0300]; [0334]; [0337]; [0338]; [0343]; [0375]; [0376]; [0424]; [0444]; [0448]; [0450]; [0451]; [0452]; [0456]; [0460]; [0461]; [0462]; [0465]

FIGS. 28, 29, 39, 41, 42, 52, 54, 55, 61, 62, 63

POR '430 Patent (Paper 15), 10-15;
POR '923 Patent (Paper 15), 20-27;
Reply '430 Patent (Paper 18), 12-13;
Reply '923 Patent (Paper 18), 10.

Free of a Filter Inside the Cavity – Petitioner's Arguments Remain the Same

All of Petitioner's Reply arguments are proper because they are:

- consistent with the Petition; and
- responsive to K-fee's POR

> *"Petitioner's reply argument 'properly expands on and is a fair extension of its previously raised…argument' that the combination…teaches [the] claim element[.]"*

W. Digital Techs., Inc. v. Viasat, Inc., 2023 WL 8632391 at *9 (Patent Tr. & App. Bd. Dec. 13, 2023)

> *"'[T]he introduction of new evidence in the course of the trial is to be expected in [IPR] trial proceedings' and permissible 'as long as the opposing party is given notice of the evidence and an opportunity to respond to it.'"*

Rembrandt Diagnostics v. Alere, Inc., 76 F. 4th 1376, 1384 (Fed. Cir. 2023)

Reply '430 Patent (Paper 18), 13-14;
Reply '923 Patent (Paper 18), 11.

’923 – Grooves “Free From Extending Entirely” Limitation

Claims 1/9: […] , the wall region includes radially spaced and vertically oriented grooves that are **free from extending entirely to the bottom region**

’923 Patent (EX1001), claims 1 and 9.

’923 – Grooves – Issues

Undisputed Issues:

- Rapparini discloses the claimed grooves in Figures 6/6bis

Disputed Issues:

- A POSITA would not rely on Figure 10 of Rapparini
- The claimed grooves would have been obvious

POR ’923 Patent (Paper 15), 27-33;
Reply ’923 Patent (Paper 18), 11-16.

’923 – Grooves – The Petition’s Mapping

grooves and ribs of the capsule body. EX1003, ¶187. However, a POSITA would have been motivated to combine the single-serve brewing system, capsule, and concepts of Yoakim, with the code location of Jarisch, and the grooves and ribs of Rapparini to arrive at the ’923 Patent claims. *Id.*

Petition ’923 Patent (Paper 1), 43.

’923 – Grooves – Rapparini Discloses Grooves Free From Extending Entirely to the Bottom Region

- Rapparini expressly discloses short ribs extending only along the side region

[0011] According to a further embodiment of the present invention, a container is provided, wherein long and short ribs are alternated along the surface of the body. The stability of the container is accordingly optimized by providing for example long ribs extending at least partially in the bottom region of the container alternated to short ribs extending only along the side region of the container.

Rapparini (EX1008), [0011]

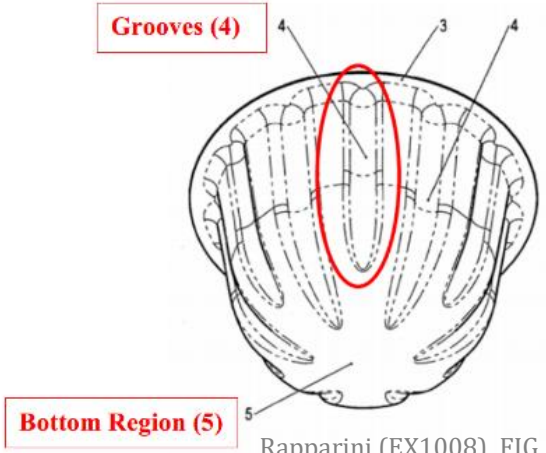

Rapparini (EX1008), FIG. 6bis

Reply ’923 Patent (Paper 18), 12, 15.

’923 – Grooves – Rapparini Discloses Grooves Free From Extending Entirely to the Bottom Region

- Rapparini is directed to configuring ribs of *variable* lengths along the body

[0009] The present invention is based on the idea of providing the body of the container with longitudinal stiffening ribs wherein the length of the ribs is variable along the surface of the body. The presence of ribs having different lengths on the body of the container allows the optimization of the stability of the container. The modulation of the length of the ribs along the surface of the container allows improving the stability and rigidity of the system.

Rapparini (EX1008), [0009]

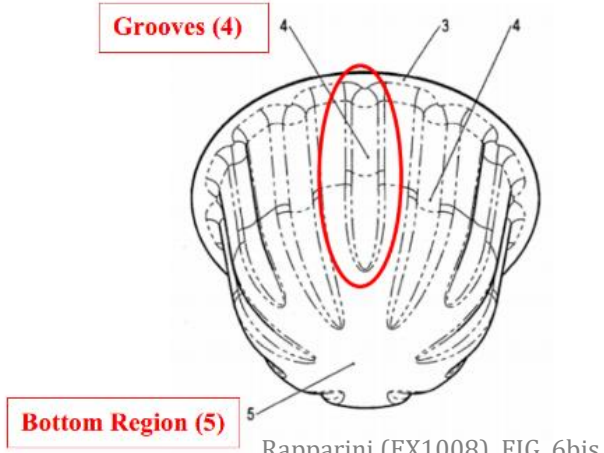

Rapparini (EX1008), FIG. 6bis

Reply ’923 Patent (Paper 18), 15.

’923 – Grooves – Rapparini Discloses Grooves Free From Extending Entirely to the Bottom Region

236. A person of ordinary skill in the art would recognize that the ribs in the cavity would also form corresponding vertically oriented grooves on the opposing side of the portion capsule wall, on the outside surface. This is due to the thin wall relative to the size of the ribs. These grooves are also radially spaced around the circumference of the outside surface of the capsule body wall, and are vertically oriented as they extend upward and downward toward the base of the capsule.

Jobin Decl. ’923 Patent (Ex.1003), ¶236

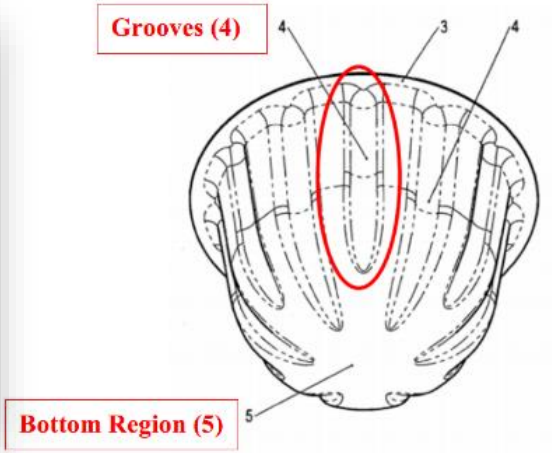

Rapparini (EX1008), FIG. 6bis

Petition ’923 Patent (Paper 1), 53.

’923 – Grooves – A POSITA Would Be Motivated to Combine Rapparini’s Grooves with Yoakim’s Capsule

198. It would have been obvious to combine the portion capsules of Yoakim and Jarisch with the longitudinal ribs and grooves of Rapparini for the benefit of greater stability of the capsule body wall as disclosed in Rapparini.

Jobin Decl. ’923 Patent (EX1003), ¶198;
Petition ’923 Patent (Paper 1), 46-48;
Reply ’923 Patent (Paper 18), 15-16.

’923 – Grooves – A POSITA Would Be Motivated to Combine Rapparini’s Grooves with Yoakim’s Capsule

199. Rapparini discloses a coffee capsule or pouch comprised of permeable material. Rapparini describes a series of longitudinal grooves in the body of the capsule wall, and ribs in the inner cavity of the capsule wall, which benefit the overall stability of the portion capsule. By 2010, it was well known that using longitudinal grooves and ribs to stiffen a thin walled capsule would lead to greater stability. Rapparini provides express motivation to use its capsule configuration in the body of a portion capsule: “[t]he presence of ribs having different lengths on the body of the container allows the optimization of the stability of the container. The modulation of the length of the ribs along the surface of the container allows improving the stability and rigidity of the system.” Ex. 1008 at [0009].

Jobin Decl. ’923 Patent (Ex.1003), ¶199

Petition ’923 Patent (Paper 1), 46-48;
Reply ’923 Patent (Paper 18), 15-16.

’923 – Grooves – K-fee’s POR and Sur-Reply Do Not Dispute That Figure 6bis Discloses the Claimed Grooves

K-fee’s Infringement Contentions (EX1049)	Rapparini FIG. 6bis (EX1008)
	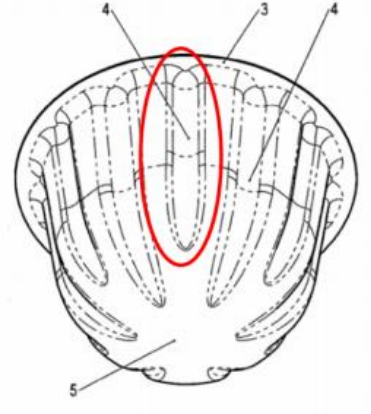

Infringement Contentions ’923 Patent (EX1049), 9;
Rapparini (EX1008), FIG. 6bis (annotated);
Jobin Decl. ’923 Patent (Ex.1003), ¶199;
POR ’923 Patent (Paper 15), 27-33;
Sur-Reply ’923 Patent (Paper 19), 19-20.

’923 – Grooves – Configuring Grooves to Not Extend to the Bottom Region is an Obvious Design Choice

238. In any event it would have been an obvious design choice to configure grooves on the wall region of the capsule body that do not extend entirely into the bottom region of the capsule, as that is one of a limited number of configurations available for locating vertical grooves on the body of a capsule wall to provide structural stability.

Jobin Decl. ’923 Patent (EX1003), ¶238

Reply ’923 Patent (Paper 18), 15.

’923 – Grooves – The Claimed Grooves Would Have Been Obvious

88. The concept of stiffening a thin wall structure with grooves or ribs is an old and well-known engineering principle. For example, Davis discloses a ribbed grip area in a thin wall cup for stiffening. (*See* Ex. 1030, Davis, at col. 1, lines 14-21.)

Jobin Decl. ’923 Patent (EX1003), ¶88

Reply ’923 Patent (Paper 18), 15.

’923 – Grooves – Prior Art Discloses Grooves Not Extending to the Bottom Region As a Means of Improving Stability

EX1035	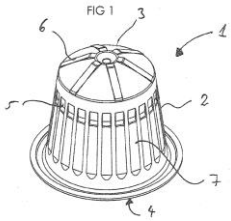	**[0027]** **7**. side wall stiffening element
EX1031	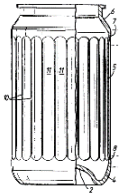	axial load. It has been found that the provision of a plurality of parallel longitudinally extending outwardly convex ribs in the central portion of the can body will reduce or eliminate the effect of such dents and give axial strength to the can. It has also been found that the
EX1032	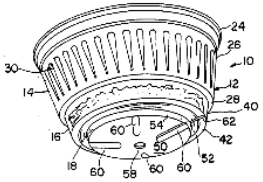	The wall **26** is cylindrical and is stepped and tapered inwardly and includes vertical ribs **30** for strengthening. The bottom wall **28**, in the illustrative embodiment, is in the form of an annular shoulder and includes a relatively large central opening **32**. As illustrated, the reser-

Mariller (EX1035), [0027], FIG. 1;
Claydon (EX1031), 1:27-37, FIG. 3;
Erickson (EX1032), 5:15-19, FIG. 1;
Reply ’923 Patent (Paper 18), 15;
Jobin Decl. ’923 Patent (EX1003), ¶¶88, 89.

’923 – Grooves – The ’923 Patent and Rapparini Disclose Grooves for Stiffening

’923 Patent (EX1001)	Rapparini (EX1008)
necessary that they are extended over the whole length. The grooves are formed according to the invention in such a way that the wall region is reinforced or stiffened due to the grooves **32**. Moreover, the plurality of the grooves **32**, which	**[0009]** The present invention is based on the idea of providing the body of the container with longitudinal stiffening ribs wherein the length of the ribs is variable along the surface of the body. The presence of ribs having different lengths on the body of the container allows the optimization of the stability of the container. The modulation of the length of the ribs along the surface of the container allows improving the stability and rigidity of the system.

’923 Patent (EX1001), 12:6-9;
Rapparini (EX1008), [0009].

’923 – Grooves – A POSITA Would Have Had Good Reason to Pursue Grooves to Not Extend to the Bottom Region

“[When] there are a finite number of identified, predictable solutions, a person of ordinary skill in the art has good reason to pursue the known options within his or her technical grasp.”

KSR v. Teleflex, 550 U.S. 398, 421 (2007)

Reply ’923 Patent (Paper 18), 15.

’923 – Grooves – The Petition Relied on a Rounded Base Capsule in Yoakim

201. A person of ordinary skill in the art would have an expectation of success when combining the grooves and ribs of Rapparini into the walls of the capsules taught in Yoakim and Jarisch. First, Yoakim, Jarisch and Rapparini all contemplate similarly-shaped capsules—circular, symmetrical, including a flange, and including a rounded base:

Yoakim	Jarisch	Rapparini
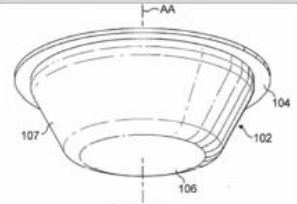 FIG. 27	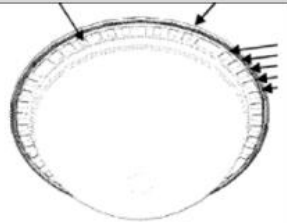	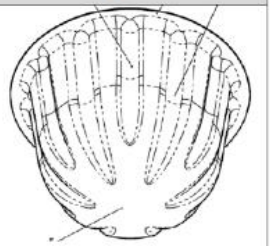

Jobin Decl. ’923 Patent (EX1003), ¶201

Yoakim (EX1004), FIG. 27;
Jarisch (EX1005), FIG. 7;
Rapparini (EX1008), FIG. 6bis;
Petition '923 Patent (Paper 1), 47-48;
Reply ’923 Patent (Paper 18), 13.

’923 – Grooves – Yoakim Discloses Rounded Bottom Capsules

[0129] The capsule can also comprise a cup-shaped body onto which the sealing lid is sealed. The cup-shaped body may also comprise gas barrier materials, such as metal, e.g., thin aluminium and/or plastic.

[0473] The upper body portion can be, for instance, a truncated or cylindrical portion. In mode, the body comprises a lower portion of variable length whereas the upper portion can be of constant length for all capsules in the set. The lower portion can be convex, flat or concave.

Yoakim (EX1004), [0129], [0473]

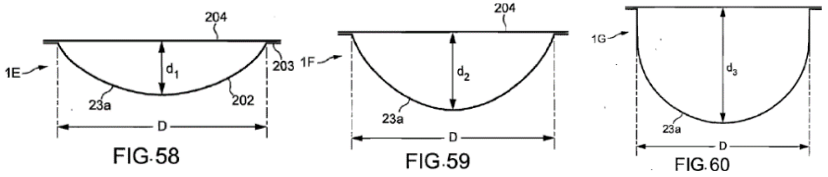

Yoakim (EX1004), FIGS. 58-60;

Reply ’923 Patent (Paper 18), 13.

’923 – Grooves – A POSITA Would Not Have Relied On Figure 10 of Rapparini to Modify Yoakim’s Capsule

- Figure 10 depicts an insert for the basket of a Moka Pot, not a single-serve coffee capsule that could be used with Yoakim’s system

and **6***bis*. In particular, the height of the container shown in FIGS. **9**, **10** and **11** is adapted to employ the container in the basket of existing moka pots.

Rapparini (EX1008), [0060]

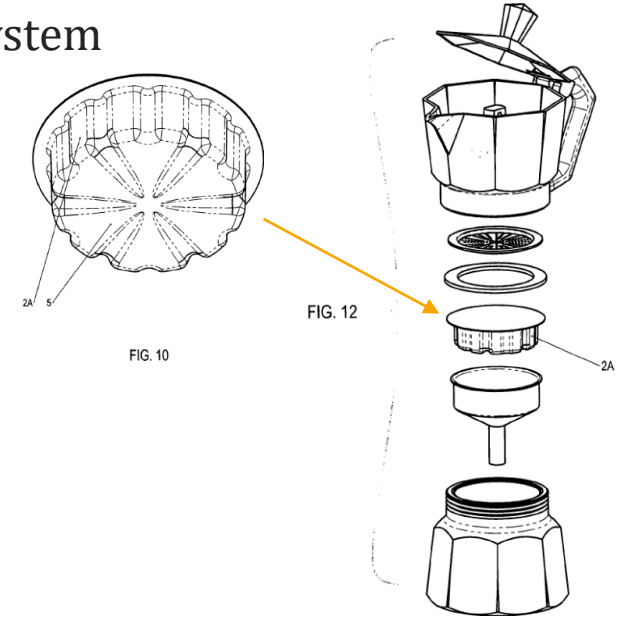

Rapparini (EX1008), FIGS. 10 & 12

Reply ’923 Patent (Paper 18), 14.

’923 Grooves – Figure 10 Discloses Short Ribs

[0061] As can be seen in FIG. **10**, the alternate length of the stiffening ribs **4** is particularly advantageous in the present case. In particular, in the present case, the container **2**A has substantially a cylindrical shape with a substantially flat bottom. The short ribs run only along the side wall of the container **2**A. In particular, the short ribs run along the entire height of the side wall of the container **2**A. The long ribs extend beyond the side wall of the container **2**A in the bottom portion of same so as to meet substantially at the centre of the bottom portion of the container **2**A. In particular, the pointed endings of the long ribs point toward the centre of the bottom portion of the container **2**A. Moreover, the depth of the long ribs decreases toward the centre of the bottom **5** of the container **2**A so as to maintain the stability of the central portion. The short ribs have substantially constant depth along their entire length. Moreover, the short ribs have substantially constant width along their entire length and do not exhibit pointed endings.

Rapparini (EX1008), [0061]

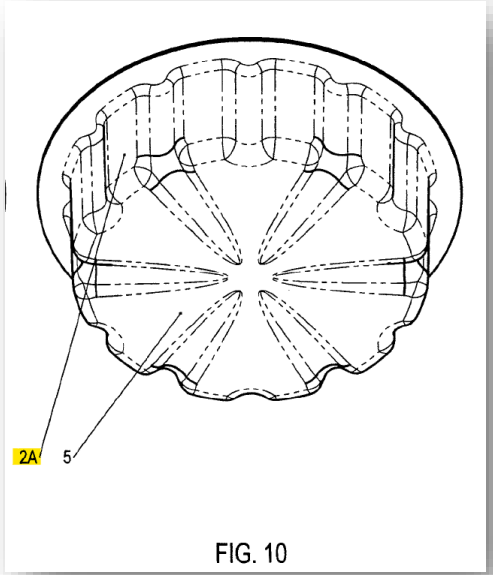

Rapparini (EX1008), FIG. 10

POR ’923 Patent (Paper 15), [0061];
Reply ’923 Patent (Paper 18), 14.

’923 Grooves – A POSITA Would Not Need to Incorporate Figure 10’s Exact Configuration into Yoakim’s Capsule

*“It’s not necessary to show that a combination is ‘the **best** option, only that it be a **suitable** option.’”*

Intel Corp. v. Qualcomm Inc., 21 F.4th 784, 800 (Fed. Cir. 2021)
(emphasis added)

“[T]he appropriate obviousness analysis is not whether the conical shape of Figure 1 can be physically combined or ‘reconciled’ with the non-conical shape of Figure 11. Rather, the correct legal standard is whether a skilled artisan, considering Roinestad as a whole, would have arrived at the claimed shapes.”

Laitram, LLC v. Ashworth Bros., Inc., 2023 WL 3449148 at *8 (Fed. Cir.2023)

Reply ’923 Patent (Paper 18), 14.

’923 – Grooves – K-fee’s New Sur-Reply Arguments

K-fee’s new argument was addressed by Jobin

200. Rapparini also expressly states that the invention is applicable to other capsule materials (which would include metal), other dimensions, and can be expressly employed for use in automatic espresso machines, like the ones disclosed in Jarisch. Ex. 1008 at [0067]. As Rapparini “guarantees stability of the structure of filtering and permeable containers,” a person of ordinary skill in the art would find it obvious to apply this to impermeable containers as well. Ex. 1008 at [0007]. Accordingly, a person of ordinary skill in the art would have been motivated to use the configuration disclosed in Rapparini to achieve the benefits expressly taught. Furthermore,

Jobin Decl. (EX1003), ¶¶ 200-202.

centrifugal device is merely conclusory (Ex.1003, ¶200). Mr. Jobin does not explain any of the structural and functional demands that the bag-type filter capsules of Rapparini would need to encounter with the various embodiments of the Yoakim and Jarisch systems, all of which demand structural rigidity due to centrifugation, let alone providing the necessary space for preserving a barcode. Rapparini requires that the capsule material be “permeable, filtering, and thermoformable material”—precisely the opposite of the material needed for a centrifuge system of Yoakim and Jarisch. For example, using a “permeable, filtering, and thermoformable material” in the capsule holder of Figs. 61/62 of Yoakim and Fig. 4 of Jarisch would result in beverage spilling into the voluminous capsule holder and being unable to escape the system except from underneath the flange of the capsule contaminating the reading surface of the barcode and blocking light traveling through the capsule holder.

NEW ARGUMENT

Sur-Reply ’923 Patent (Paper 19), 22.

Petition ’923 Patent (Paper 1), 47.

’923 – Turbulent Flow Limitation

Claims 7/13: The single-serve capsule according to claim [1/9], wherein the cavity has grooves defined between the ribs, **and the grooves in the cavity generate turbulence of water in the cavity**

‘923 Patent (EX1001), claims 7 and 13.

’923 Turbulent Flow – Yoakim in View of Rapparini Satisfies This Limitation

277. Further, a person of ordinary skill in the art would have understood that the grooves in the cavity generate turbulence of the water in the cavity. While spinning, the fluid is guided and distributed into separate grooves which promotes flow, as Yoakim explains. Ex. 1004 at [0218] (“The upper surface of the lid 400 may comprise a water distribution structure such as radial grooves or recesses to promote the flow of water toward the surface of the collecting assembly . . .”).

278. Discontinuities such as ribs and grooves of the type shown in Rapparini would cause the fluid to move in various directions, resulting in turbulence and mixing in the capsule. For example, fluid that impacts either side of the groove will be redirected toward the maximum depth of the groove, meeting at this point and mixing.

Jobin Decl. ‘923 Patent (EX1003), ¶¶277-278

Petition ’923 Patent (Paper 1), 63.

’923 – Turbulent Flow – Using Grooves on a Capsule Body Wall to Generate Turbulence Was Well-Known to a POSITA

Jobin relies on evidence to demonstrate knowledge in the art and motivation to combine

279. It would also have been obvious to a POSITA to use grooves to generate turbulence. Fluid impacting the groove surfaces would be redirected, causing mixing and resulting turbulence. This is concept was also well-known and understood in the art, for example, Ex. 1033 to Sweeney at col. 2, lines 30-35, and Ex. 1034 to Rubino at [0009], [0019]-[0020], in order to achieve the predictable result of influencing water flow, such as to facilitate further mixing of the beverage contents. *See* my discussion above in the Technical Background at ¶¶87-95.

Jobin Decl. ‘923 Patent (EX1003), ¶279

Petition ’923 Patent (Paper 1), 63.

’923 – Turbulent Flow – Using Grooves on a Capsule Body Wall to Generate Turbulence Was Well-Known to a POSITA

Sweeney 2003 (EX1033)	Rubino 2007 (EX1034)
The channels formed between the circumferentially spaced flutes serve to efficiently direct the brewed beverage downwardly towards the pierced container bottom, with an accompanying beneficial increase in turbulence in the head space defined between the filter element and container side wall. 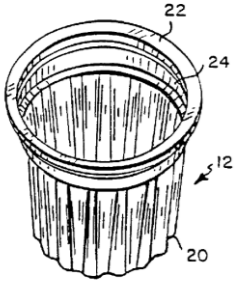	**[0009]** The present invention provides several relevant advantages. The main advantage lies in the fact that the internal grooves of the capsule attain optimal flow conditions for the liquid passing through the capsule itself, to the advantage of the quality and repeatability of the end beverage and also of the correct operation of the associated machines, which are not subject to unforeseeably variable flow conditions. 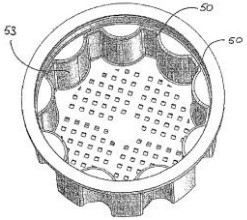

Sweeney (EX1033), 2:30-35, FIG 2;
Rubino (EX1034), [0009], FIG 8;
Jobin Decl. ‘923 Patent (EX1003), ¶¶ 90, 92, 279;
Pet. (Paper 1), p. 63

’923 – Turbulent Flow – The ’923 Patent Admits Using Grooves to Generate Turbulence Was Known to a POSITA

K-fee’s February 2011 German Application acknowledges that turbulence was known and can be easily achieved by a POSITA.

or removed from the brewing chamber. A further advantage of the plurality of channels is that, within the cavity, the channel structure in the wall region can optimize the flow of the extraction liquid along the basic-element region, and therefore, by virtue of the shaping of the channel structure, for example better and/or more pronounced turbulence of the extraction liquid in the cavity, or else a more uniform (laminar) flow of the extraction liquid, is achieved and/or can be realized by straightforward means. More pronounced turbulence of the extraction liquid in the cavity, in relation to the prior art, has the

February 2011 App. (EX1045), 21:26-37

Reply ’923 Patent (Paper 18), 18-19.

’923 – Turbulent Flow – The ’923 Patent Admits Using Grooves to Generate Turbulence Was Known to a POSITA

may be obtained by the structure of the grooves itself or by using simple means additionally. A stronger turbulence compared to the one known in the state-of-the-art has the advantage that no unintended and casual main streams are formed in the raw materials. Instead the extraction liquid equally flows through the raw material in all of the volume.

’923 Patent (EX1001), 4:47-52

The ‘923 Patent claims do not require any particular level of turbulence

Reply ’923 Patent (Paper 18), 18-19;
Jobin Decl. ‘923 Patent (EX1003), ¶279.

’923 – Turbulent Flow – Experimentation is Not Required

Howle contends that turbulent flow is sufficiently disclosed in the ’923 patent without any such support

Q. Okay. Did you conduct any testing to determine whether the grooves in the '932 patent generate turbulence?

A. Physical testing?

Q. Yes.

A. I did not. There was no analysis provided to

Howle Depo Tr. ’923 Patent (EX1067), 89:16-21

Reply ’923 Patent (Paper 18), 17-18.

’923 – Turbulent Flow – Howle Admits A POSITA Would Know How to Configure Grooves to Generate Turbulent Flow

Q. So the '923 patent also talks about generating a more laminar flow with grooves as well; is that right?

A. It says that the grooves can be chosen such that you can get either turbulent or laminar flow.

Q. Does the '923 patent explain how to configure the grooves for turbulent versus laminar flow?

A. No, it doesn't explain how to do that, but that would be well within the capabilities of someone who's skilled in the arts -- or the art, sorry.

Howle Depo Tr. (EX1067), 88:16-25

Reply ’923 Patent (Paper 18), 18

’923 – Turbulent Flow – K-fee Mischaracterizes Yoakim’s Discussion of Laminar Flow

Paragraph 509 of Yoakim discusses liquid ***exiting*** the capsule membrane through outlets

[0509] The extraction of the beverage out of the capsules **1**A or **1**B is obtained by driving the interface assembly **213** and capsule holder **214** together with the capsule, in rotation (R) along axis I, at relatively high speed, e.g., between 500 and 15000 rpm. The rotation is driven by a rotational motor (not shown). Liquid is forced to traverse the ingredient and leave the capsule at the upper periphery of the capsule, i.e., by outlet perforations provided in the upper wall by perforators **221**. Since many perforators are placed evenly at the periphery of the upper wall, liquid can also exit by making a laminar flow of beverage dispersed radially along the whole periphery of the upper wall. The centrifuged liquid is projected between the rim of the capsule and the upper surface of the interface assembly **213** against the collector **215**. The liquid beverage is then collected and dispensed through the duct **216**.

Yoakim (EX1004), [0509]

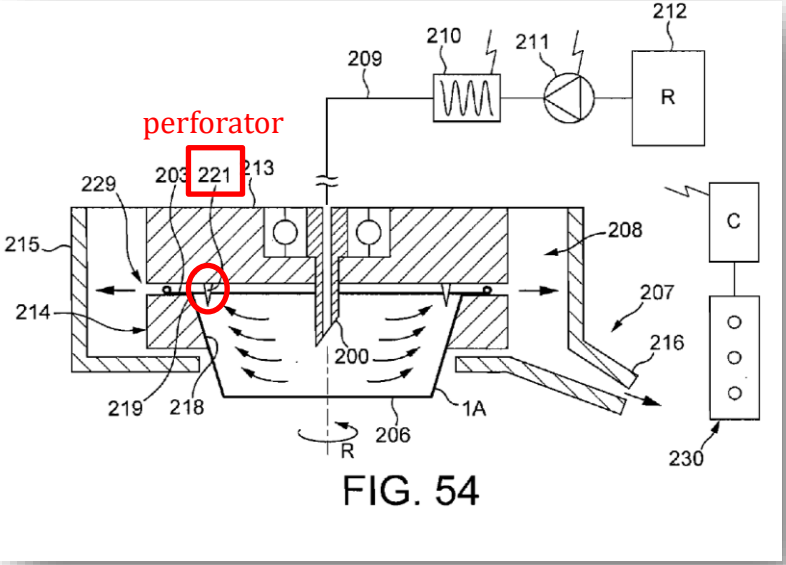

FIG. 54

Yoakim (EX1004), FIG54

POR ’923 Patent (Paper 15), 33-34;
Sur-Reply ’923 Patent (Paper 19), 26-27.

’923 – Turbulent Flow – Yoakim’s Disclosure of Laminar Flow is Irrelevant

- Claims 7 and 13 of the ’923 Patent only require turbulence of liquid <u>in the capsule’s cavity</u>, not upon exiting the capsule

- Howle agrees:

> Q. Do the claims require water to exit the capsule under turbulence?
>
> (The witness reviewed material.)
>
> THE WITNESS: There's no discussion of the exiting of that water in that claim.

Howle Depo (EX1067), 85:16-86:4

Reply ’923 Patent (Paper 18), 17-19.

’923 – Turbulent Flow – Yoakim Confirms that Grooves Influence Fluid Flow in its Centrifugal Brewing System

[0218] In FIG. **25**, is illustrated another embodiment of the brewing system of the invention. The difference is here that a water by-pass conduit **500** is provided in addition to the main water conduit **50** for adding a volume of water in the collecting assembly **52**. A volume of water may be added before, during or after the centrifugal brewing operation in the capsule. The by-pass conduit ends on the upper surface of the rotating lid **400**. The upper surface of the lid **400** may comprise a water distribution structure such as radial grooves or recesses to promote the flow of water toward the surface of the collecting assembly. The control unit may control the delivery of the added volume of water so that the volume is added at the same time as the coffee extract is delivered by centrifugation so that the foam that is created on the top of the beverage is not destroyed.

Yoakim (EX1004), [0218]

Petition ’923 Patent (Paper 1), 63;
Jobin Decl. ’923 Patent (EX1003), ¶277;
POR ’923 Patent (Paper 15), 33-34.

’923 – Turbulent Flow – Yoakim’s Disclosure of Laminar Flow is Irrelevant

- Jobin has consistently stated that a POSITA would understand that grooves in Yoakim’s capsule cavity would generate turbulence

And I say furthermore that a person of ordinary skill in the art would understand that grooves in the cavity generate turbulence of the water in the cavity.

And I go on to state that while spinning the Yoakim capsule is centrifugal. Those grooves tend to encourage the flow to be distributed into those separate grooves, which promotes that mixing as the flow points come together.

Jobin Depo. (EX2019), 43:9-10

279. It would also have been obvious to a POSITA to use grooves to generate turbulence. Fluid impacting the groove surfaces would be redirected, causing mixing and resulting turbulence. This is concept was also well-known and understood in the art, for example, Ex. 1033 to Sweeney at col. 2, lines 30-35, and

Jobin Decl. ’923 Patent (EX1003), ¶279

Petition ’923 Patent (Paper 1), 63;
POR ’923 Patent (Paper 15), 33-34;
Reply ’923 Patent (Paper 18), 17.

’430 – Pump Control Limitations

Claim element [1.o]: wherein the ***pump is controlled to push the water*** into the single-serve capsule ***only upon a determination*** that the read barcode agrees with a stored reference

Claim element [7.p]: wherein the beverage machine, by reading or detecting the identifier with the sensor/detector, is configured to determine if the single-serve capsule belongs to a group of single serve capsules operable for use with the beverage machine, and ***only if the beverage machine determines*** that the single-serve capsule belongs to the group of single-serve capsules ***operable for use*** with the beverage machine is the ***pump controlled to push the water*** into the single-serve capsule

Disclosed by Yoakim
Disclosed by Rossi

’430 Patent (Ex.1001), claims 1 and 7.

’430 – “Pump” Limitations – Undisputed Issues

- Yoakim discloses a pump to supply water
- Rossi discloses:
  - activating the beverage production cycle only upon a determination that the capsule is operable for use with the machine
  - determining whether the identifier agrees with a stored reference
  - using identification/validation elements to determine whether the capsule is operable for use

Petition ’430 (Paper 1), 37, 61-62, 71-73, 77-80;
Jobin Decl. ’430 Patent (EX1003), ¶¶261-267, 287-294;
Decision ’430 Patent (Paper 9), 30-31;
Reply ’430 Patent (Paper 18), 14-18.

’430 – Yoakim Discloses a Pump

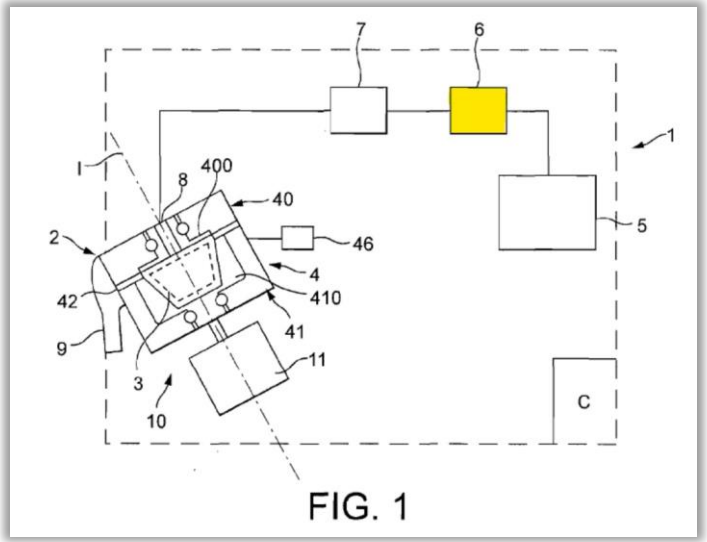

FIG. 1

Yoakim (EX1004), FIG. 1

[0180] The system **1** of the invention is illustrated in FIG. **1** in the more general sense. The system comprises a device **2** and a capsule **3**. The device has a brewing module **4** into which the capsule can be inserted for being brewed and is removed after use for being discarded (e.g., for waste or recycling). The module is in fluid communication with a water reservoir **5** containing fresh or, alternatively heated water. A fluid transport means such as a low pressure pump **6** can be provided in the water circuit to transport water from the reservoir to the module. A water heater **7** is further provided to heat water to the desired temperature. It can be noted that water could be heated in the reservoir itself and water could be transported from the reservoir by effect of vaporisation. Water can be fed into the module **4** at low or substantially no pressure. For example, a pressure between **0** and **2** bars above atmospheric pressure can be envisaged at the inlet **8** of the module.

Yoakim (EX1004), [0180]

Petition ’430 Patent (Paper 1), 34, 54, 61-62;
Jobin Decl. ’430 Patent (EX1003), ¶¶164-165, 227-229;
Decision ’430 Patent (Paper 9), 29-30;
Reply ’430 Patent (Paper 18), 14-15.

’430 – Yoakim Discloses Using Identification Means to Control the Pump

[0477] The capsule system further comprises an identification means associated to the different capsules in the set for identifying each capsule and adjusting brewing parameters accordingly. The adjustable parameters can be the rotational speed, the back-pressure at the outlet of the capsule, and/or the volume of liquid fed in the capsule. The identification means participates to deliver a wider range of beverages having differentiated characteristics (volume, taste, strength, crema, colour, etc.). The identification means are associated to control means placed in the centrifugal brewing device which controls the adjustment of the said parameters, by controlling the rotational motor driving the capsule holder or/and the pump supplying liquid in the capsule.

Yoakim (EX1004), [0477]

Petition ’430 Patent (Paper 1), 71-73;
Jobin Decl. ’430 Patent (EX1003), ¶¶261-267;
Reply ’430 Patent (Paper 18), 14-15.

’430 – Rossi is Designed to Control the Brewing Process

The present invention relates to a system of an edible-product making machine and a load element, and a process for controlling the operation of the edible-product making machine .

The necessary operating conditions of the machine vary depending on the substance within the load element. Such operating conditions may include the amount of water used for each product, the temperature and pressure of the water supplied, as well as the time required for operation. For each substance or type of substance, the operating conditions affect the quality of the final edible product. In order to achieve a desired quality, the contents of the load element must be known and the appropriate operating conditions must be set .

Rossi (EX1041), 3-4, FIG. 1

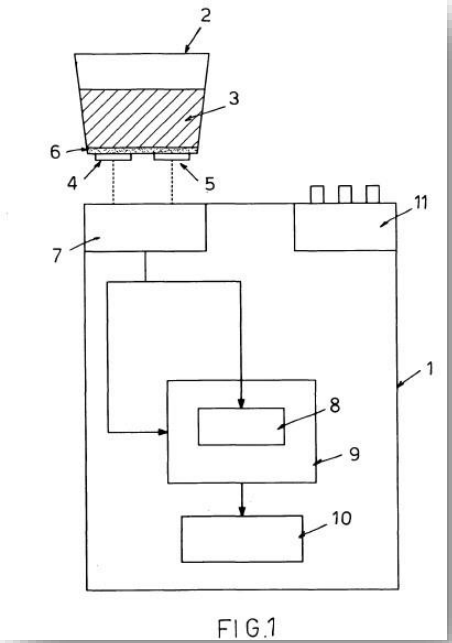

Rossi (EX1041), FIG. 1

Petition ’430 Patent (Paper 1), 36-37;
Jobin Decl. ’430 Patent (EX1003), ¶¶172-174;
Reply ’430 Patent (Paper 18), 15-16.

’430 – Rossi Ensures Only Appropriate Capsules Are Used For Safety

design or type of load element. Use of an incorrect load element may cause the machine to malfunction and can prejudice the safety and integrity of the machine and the may harm the user. These types of machines often involve the use of high pressure, high temperature water, which poses a potential health hazard if the machine is not used correctly or malfunctions. Alternatively, use of the wrong operating

Within the scope of this technical task is therefore that of providing a safe and simple system and process for ensuring that an appropriate load element is used.

Rossi (EX1041), 5

Petition ’430 Patent (Paper 1), 36-37;
Jobin Decl. ’430 Patent (EX1003), ¶¶172-174;
Reply ’430 Patent (Paper 18), 15-16.

’430 – Rossi Utilizes Optical Codes to Control the System

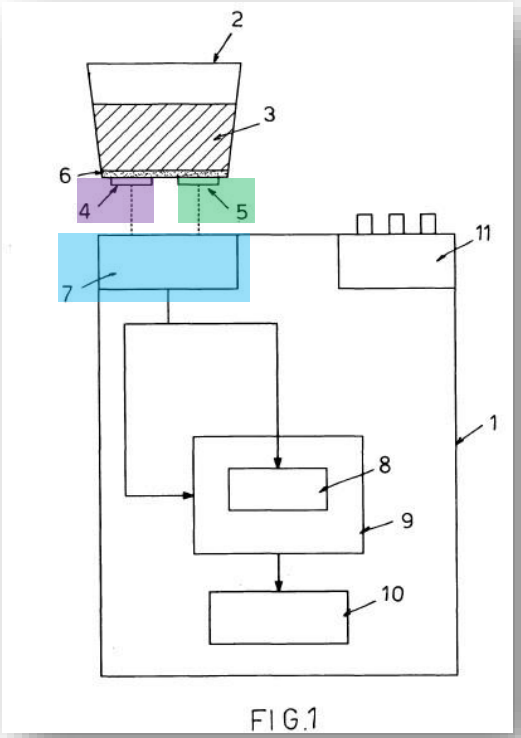

Rossi (EX1041), FIG. 1 (annotated)

The load element of the system comprises an identifying element for its recognition and a validation element for its validation. These are preferably in the form of barcodes, antennae, or paints having optically measurable properties. The machine comprises means for recognising the load element and the validation element, such as at least one infra red barcode reader, radio frequency wave transmitter and receiver, or optical sensor. These are preferably located

Rossi (EX1041), 11

Petition ’430 Patent (Paper 1), 71-73, 77-80;
Jobin Decl. ’430 Patent (EX1003), ¶¶263-265, 291-294;
Reply ’430 Patent (Paper 18), 15-16.

’430 – Rossi Discloses Comparing the Identifier to a Stored Reference

The system further optionally comprises checking means connected to a control unit of the machine. This may be in the form of a computer programme within the control unit . The checking means compares the signal from the recognising means for the identifying element and the validation element with pre-stored data in order to allow the machine to proceed to activation only if it recognises the identifying element and the unvalidated validation element. The checking means may be

Rossi (EX1041), 11

Petition ’430 Patent (Paper 1), 71-73, 77-80;
Jobin Decl. ’430 Patent (EX1003), ¶¶263-266, 291-294;
Reply ’430 Patent (Paper 18), 15-16.

’430 – Rossi’s Process

Step 1
Recognizing an identifying element on the capsule and allowing the machine to take further steps only if it also recognizes a validation element

Step 2
Validating the validation element

Step 3
Automatically ***activating a cycle of production*** of the coffee product ***only after*** having recognized an identifying element in combination with a validated validation element

Rossi (EX1041), 6;
Petition ’430 Patent (Paper 1), 73-74, 77-80;
Jobin Decl. ’430 Patent (EX1003), ¶¶268-272, 287-294;
Reply ’430 Patent (Paper 18), 15-16.

’430 – Rossi Will Not Operate Brewing Unless Identification Element is Detected and Operability Determined

The use of an identification element and recognition means, as well as the step of recognising the identification element allows the machine to recognise the load element and, hence, its contents. This in turn enables the machine to automatically select the operating conditions appropriate for that specific load element. This prevents the user from having to verify the contents of the load element, and from having to know and select the operating conditions appropriate therefor. It also helps to prevent the safety hazard associated with the use of inappropriate operating conditions .

validation element are recognised. Thus, the production process cannot be activated unless the first step has been completed. The process could also require that the validation

Rossi (EX1041), 7;
Petition ’430 Patent (Paper 1), 27, 77-80;
Jobin Decl. (EX1003), ¶¶288-290;
Reply ’430 Patent (Paper 18), 16.

’430 – Howle – Rossi Will Not Operate Brewing Before Identification

Q. Okay. Just to follow up, it's also your opinion, reading Rossi, that the production cycle won't be activated if an identification element is never sensed; is that right?

A. So it requires unlocking the machine when both the identification element and the unvalidated validation element are recognized.

Q. So you would agree that means you need an identification element to be identified to operate the brewing cycle; right?

A. At least.

Howle Depo. Tr. (EX1066), 176:9-19

Reply ’430 Patent (Paper 18), 16.

’430 – Validation Element Also Determines Operability For Use

The use of a validation element and validation means, as well as the step allowing the machine to take further steps only if it also recognises on the load element the validation element help to prevent the use of an already-used single use load element in the machine, thereby avoiding the production of an edible product of inferior quality and ensuring the proper functioning of the machine. In the case of re-use of a load element originally containing a water soluble aromatic substance, the dynamics of the fluid flow through the machine could be different if there is no substance in the load unit for the water to contact, thereby causing incorrect functioning of the machine and the associated health hazard.

Rossi (EX1041), 7

Petition ’430 Patent (Paper 1), 27, 77 80;
Jobin Decl. (EX1003), ¶¶288-290;
Reply ’430 Patent (Paper 18), 16.

’430 – Yoakim and Rossi Render the Limitation Obvious

265. A person of ordinary skill in the art would understand Rossi’s disclosure of not activating a brewing cycle unless there is a determination that the identifier agrees with a stored reference to constitute not operating the pump that pushes water into the single-serve capsule unless the read identifier, which can be a barcode, agrees with a stored reference. The pump is a component of the brewing cycle and thus would not operate without brewing cycle activation.

Jobin Decl. ’430 Patent (EX1003), ¶265

Petition ’430 Patent (Paper 1), 71-73;
Reply ’430 Patent (Paper 18), 15-16.

’430 Motivation to Combine – Combining Rossi With Yoakim and Jarisch

- A POSITA would have been motivated to combine the single-serve brewing system capsule, and concepts of Yoakim, and the code location of Jarisch, with Rossi to predictably arrive at the challenged claims.
- Rossi is also art in the field of portion capsule beverage extraction and discloses an invention that may be applied to coffee/espresso machines
- Yoakim, Jarisch and Rossi are all designed to use capsule identifiers such as optical codes to optimize machine operation.
- Rossi expressly discloses that its invention is intended to improve capsule-based beverage systems like Yoakim’s and Jarisch’s

Petition ’430 Patent (Paper 1), 46-47, 50-51.

’430 Motivation to Combine – Rossi’s Capsule Recognition Process Provides Predictable Benefits For Yoakim and Jarisch’s Systems

The use of a validation element and validation means, as well as the step allowing the machine to take further steps only if it also recognises on the load element the validation element help to prevent the use of an already-used single use load element in the machine, thereby avoiding the production of an edible product of inferior quality and ensuring the proper functioning of the machine. In the case of re-use of a appropriate therefor. It also helps to prevent the safety hazard associated with the use of inappropriate operating conditions .

Rossi (EX1041), 7

Petition ’430 Patent (Paper 1), 79;
Jobin Decl. ’430 Patent (EX1003), ¶290.

’430 Motivation to Combine – Expectation of Success When Combining Rossi With Yoakim and Jarisch

Rossi uses capsule-recognition technology already disclosed in Yoakim and Jarisch

> The load element of the system comprises an identifying element for its recognition and a validation element for its validation. These are preferably in the form of barcodes, antennae, or paints having optically measurable properties.

Rossi (EX1041), 11

Petition ’430 Patent (Paper 1), 49-51;
Jobin Decl. ’430 Patent (EX1003), ¶187.

’430 – Sidewall Indentations Limitation

Claim 5: […] wherein the side wall of the base element includes indentations

Claim element [7k]: (iii) a side wall having indentations;

’430 Patent (Ex.1001), claims 5 and 7.

’430 – Sidewall Indentations – Yoakim Discloses a Capsule With Indentations on the Sidewall

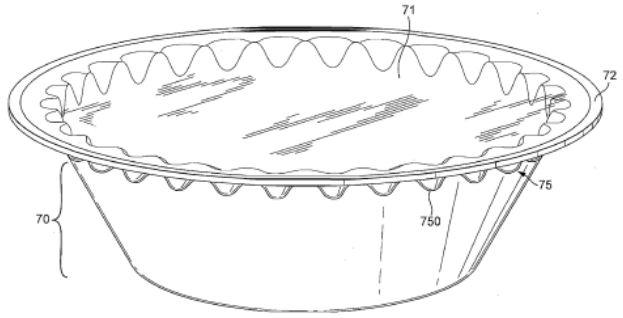

FIG. 23

Yoakim (EX1004), FIG. 23

[0215] FIG. **23** illustrates another capsule of the invention. The capsule comprises means for connecting it to the external rotational driving means of the device. For this, capsule has a toothed structure **75** on at least one of its outer surface. The capsule has a body **70** comprising an upper edge **72** which can be closed by an upper membrane **71**. The toothed structure comprises a series of teeth which is positioned below the edge

Yoakim (EX1004), [0215]

Petition ’430 Patent (Paper 1), 75-76;
Reply ’430 Patent (Paper 18), 19-20.

’430 – Sidewall Indentations – Yoakim Teaches Indentations in the Form of Teeth Or Other Structures

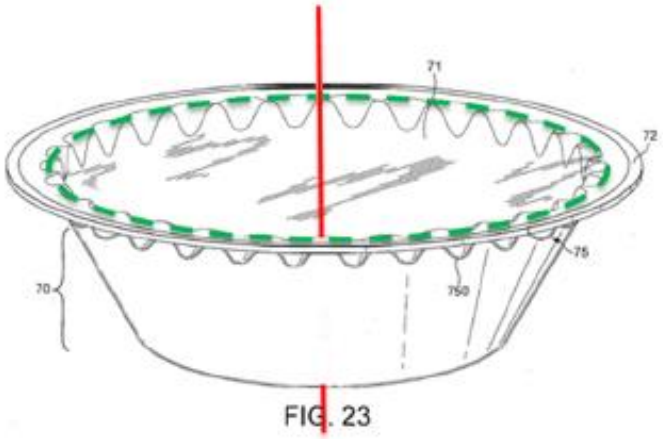

Yoakim (EX1004), FIG. 23 (annotated)

or rim **72** of the body of the capsule. The teeth are placed along the whole periphery of the body of the capsule. The body of the capsule can be made of plastic and/or aluminium or aluminium alloy. For example, it can be moulded by injection of plastic or deep drawn in aluminium. For example, the shape of the teeth could be slightly triangular, oval, rectangular or pyramidal. It should be noticed that the teeth could be replaced by other equivalent structures such as series of elements in relief and/or hollow. For example, slits, pins or small needles can be envisaged.

Yoakim (EX1004), [0215]

Petition ’430 Patent (Paper 1), 75-76;
Reply ’430 Patent (Paper 18), 19.

’430 – Sidewall Indentations – The Body of the Capsule Is the Sidewall

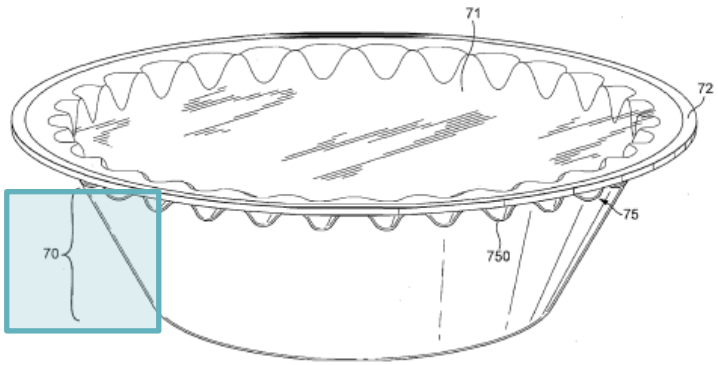

FIG. 23

Yoakim (EX1004), FIG. 23

[0215] FIG. **23** illustrates another capsule of the invention. The capsule comprises means for connecting it to the external rotational driving means of the device. For this, capsule has a toothed structure **75** on at least one of its outer surface. The capsule has a body **70** comprising an upper edge **72** which can be closed by an upper membrane **71**. The toothed structure comprises a series of teeth which is positioned below the edge or rim **72** of the body of the capsule. The teeth are placed

engagement. An additional sealing portion **121** extending along the internal surface of the side wall of the body and in the direction of the bottom of the dished body can extend from the recess to create further sealing against possible ingress of liquid between the lid and the inner surface of the body of the capsule. Of course, the form of the collecting recessed means

Yoakim (EX1004), [0215], [0420]

Petition ’430 Patent (Paper 1), 75-76;
Jobin Decl. ’430 Patent (EX1003), ¶¶277-280;
Reply ’430 Patent (Paper 18), 19.

’430 – Sidewall Indentations – A POSITA Would Have Been Motivated To Provide Indentations on the Sidewall

A POSITA would have been motivated to provide indentations on the sidewall to engage the capsule and rotate it for centrifugal extraction

[0215] FIG. **23** illustrates another capsule of the invention. The capsule comprises means for connecting it to the external rotational driving means of the device. For this, capsule has a toothed structure **75** on at least one of its outer surface. The capsule has a body **70** comprising an upper edge **72** which can be closed by an upper membrane **71**. The toothed structure

Yoakim (EX1004), [0215]

Petition ’430 Patent (Paper 1), 75-76;
Jobin Decl. ’430 Patent (EX1003), ¶¶277-280;
Reply ’430 Patent (Paper 18), 19.

’430 – Sidewall Indentations – Yoakim Explains How to Provide Indentations In The Capsule

or rim **72** of the body of the capsule. The teeth are placed along the whole periphery of the body of the capsule. The body of the capsule can be made of plastic and/or aluminium or aluminium alloy. For example, it can be moulded by injection of plastic or deep drawn in aluminium. For example, the shape of the teeth could be slightly triangular, oval, rectangular or pyramidal. It should be noticed that the teeth could be replaced by other equivalent structures such as series of elements in relief and/or hollow. For example, slits, pins or small needles can be envisaged.

Yoakim (EX1004), [0215]

Petition ’430 Patent (Paper 1), 75-76;
Jobin Decl. ’430 Patent (EX1003), ¶¶277-280;
Reply ’430 Patent (Paper 18), 19.

’430 – Sidewall Indentations – Howle Agrees the Capsule’s Body Has an Inner Surface and Outer Surface

Q. Okay. And that stamped wall would have an inner surface that would face the coffee grounds in the capsule?

A. Generally speaking, a capsule could have that.

Q. Okay. And then the outer surface of that body would be facing the outside air; is that right?

A. In that context, in a very general context, you could come up with an arrangement where that would be the case.

Howle Dep. Tr. (EX1067), 36:10-19

Reply ’430 Patent (Paper 18), 20.

’430 – Sidewall Indentations – Indentations on Single-Serve Capsules Were Known

87. It was also well-known that single-serve capsules must endure pressure, temperature and physical stresses during the brewing process, and withstand the forces of a user’s hand grasping and manipulating the capsule. As a result, single-serve capsules evolved to include certain textures such as grooves, ribs, and/or indentations on the capsule body wall to improve structural stability of the capsule, or otherwise provide aesthetic appeal. Depending upon the configuration, such

280. It would also have been obvious to a person of ordinary skill in the art to utilize indentations about the longitudinal axis on the body of the capsule in order to provide a “means for connecting [the capsule] to the external rotational driving means of the device” to facilitate controlled rotation during beverage extraction. EX1004, [0215].

Jobin Decl. ’430 Patent (EX1003), ¶¶87, 280

Reply ’430 Patent (Paper 18), 20; Petition ’430 Patent (Paper 1), 6, 76.

’430 – Sidewall Indentations – K-fee’s Sidewall Argument is Unsupported by Any Evidence and Contradictory

- Howle’s complaints of “optical aberrations” caused by the sidewall indentations are unsupported by any evidence
- Howle’s argument that that indentations on the capsule’s body’s ***sidewall*** would negatively impact a barcode located under the capsule’s ***flange*** is contradicted by his opinion that a barcode ***on the flange*** could be readily combined with a toothed ring ***on the flange***.

Howle Decl. ’430 Patent (EX2017), ¶75;
POR ’430 Patent (Paper 15), 25, 47;
Reply ’430 Patent(Paper 18), 20-21.

Motivation to Combine – Yoakim and Jarisch

Yoakim discloses nearly all elements of claims 1-10. EX1003, ¶177. A POSITA would have been motivated to combine the single-serve brewing system, capsule, and concepts of Yoakim, with Jarisch, Rossi to predictably arrive at the challenged claims. ¶¶177.

As discussed in detail below, Yoakim discloses all elements of claims 1-16 except for (1) the code location on the bottom of the capsule flange; and (2) the grooves and ribs of the capsule body. EX1003, ¶187. However, a POSITA would have been motivated to combine the single-serve brewing system, capsule, and concepts of Yoakim, with the code location of Jarisch, and the grooves and ribs of Rapparini to arrive at the '923 Patent claims. *Id.*

Petition '430 Patent (Paper 1), 46;
Petition '923 Patent (Paper 1), 43.

Motivation to Combine – Yoakim and Jarisch

A POSITA would also have an expectation of success when combining Yoakim and Jarisch, as Jarisch expressly discloses how to modify a brewing chamber like the one in Yoakim to better position an optical reader to allow it to read a code positioned on the bottom of the capsule flange, facing away from the membrane. EX1003, ¶194. Specifically, Jarisch discloses placing the light source at the bottom of the capsule support chamber, *i.e.*, the centrifugal cell 3, and configuring the capsule support chamber to be a light conductive material such that a light source will reach the bottom of the capsule flange. EX1005, [0082]-[0084]; EX1003, ¶194. Jarisch further discloses mirrors to better position the optical light source and sensor. The Jarisch optical reader configuration is depicted below with the light path (red) from detector (62) to capsule rim (73).

Petition '923 Patent (Paper 1), 45

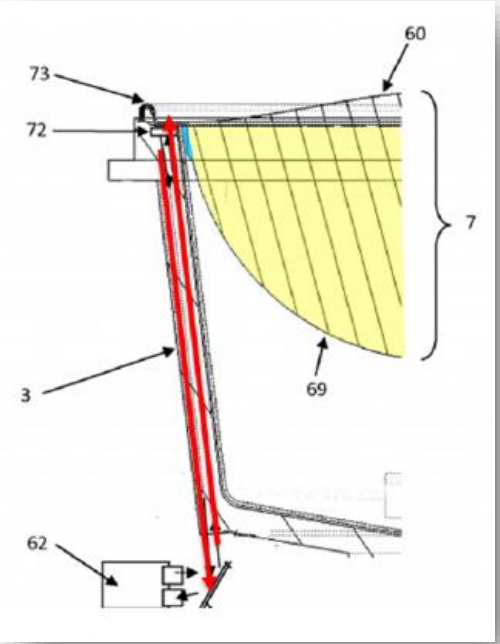

Jarisch (EX1005), FIG. 4 (annotated)

Petition '430 Patent (Paper 1), 48-52;
Petition '923 Patent (Paper 1), 45-56.

Motivation to Combine – Undisputed Motivation Factors

- Yoakim and Jarisch are analogous art in the field of portion capsule beverage extraction
- Each applications discloses an invention that may be applied to coffee/espresso machines
- Yoakim and Jarisch share a common applicant (Nestec S.A.) and a common inventor (A. Perentes)

Petition '430 Patent (Paper 1), 46-47;
Petition '923 Patent (Paper 1), 43-44.

Motivation to Combine – A POSITA Would Be Motivated To Combine Yoakim and Jarisch

- Jarisch is intended to be combined with centrifugal brewing systems like Yoakim's
- Yoakim benefits from Jarisch's code location
- Substantial reconstruction is not required—Jarisch teaches precisely how to successfully modify Yoakim
- Jarisch's "bit code" does not teach away from Yoakim's "barcode"
- K-fee misrepresents Jarisch's prosecution history

Reply '430 Patent (Paper 18), 21-27;
Reply '923 Patent (Paper 18), 19-26.

Motivation to Combine – Jarisch's System is Intended to Modify Centrifugal Brewing Systems like Yoakim's

[0034] FIG. **1** illustrates an example of a beverage preparation system **1** as described in WO2010/026053 for which the capsule of the invention can be used.

WO2010/026053

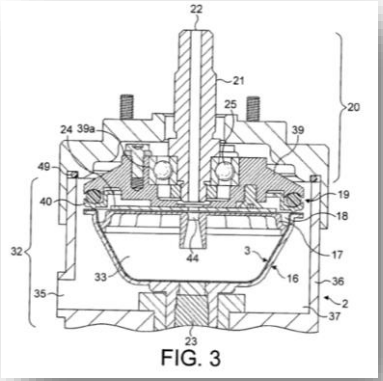

Denisart (EX1007), FIG. 3

Yoakim

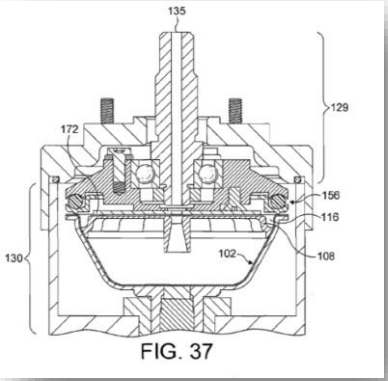

Yoakim (EX1004), FIG. 37

Jarisch (EX1005), [0034];
Reply '430 Patent (Paper 18), 21;
Reply '923 Patent (Paper 18), 19-20.

Motivation to Combine – Yoakim Uses Optical Codes to Optimize Brewing Parameters

[0477] The capsule system further comprises an identification means associated to the different capsules in the set for identifying each capsule and adjusting brewing parameters accordingly. The adjustable parameters can be the rotational speed, the back-pressure at the outlet of the capsule, and/or the volume of liquid fed in the capsule. The identification means participates to deliver a wider range of beverages having differentiated characteristics (volume, taste, strength, crema, colour, etc.). The identification means are associated to control means placed in the centrifugal brewing device which controls the adjustment of the said parameters, by controlling the rotational motor driving the capsule holder or/and the pump supplying liquid in the capsule.

[0525] In an alternative illustrated in FIGS. **61** and **62**, the identification means are directly associated to the different capsules. In this case, the identification means ID**4**, ID**5** are capsule recognition means attached to or embedded in the capsules. The recognition means can be any mechanical, optical, magnetic or radio-frequency recognition means capable of delivering information to the brewing device, via a sensing device **231**, as to which type of capsule is inserted in the device. For example, the recognition means is a barcode, a colour code, a RFID tag, a magnetically sensitive element, or a mechanical key or shape.

Yoakim (EX1004), [0477], [0525]

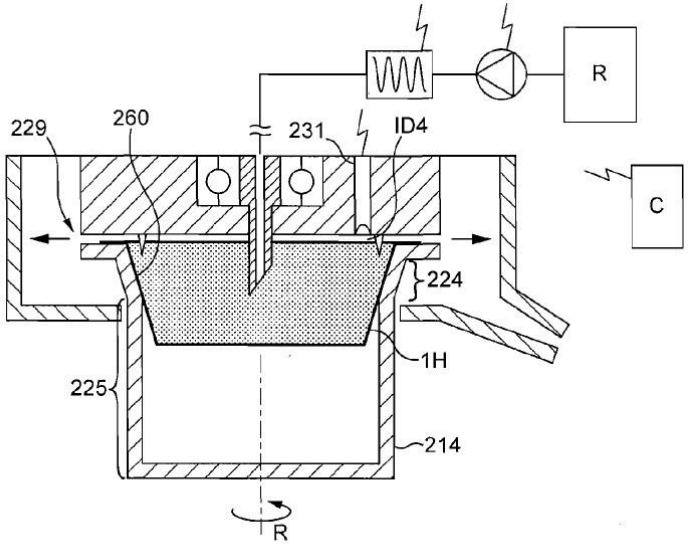

FIG. 61

Yoakim (EX1004), FIG. 61

Petition '430 Patent (Paper 1), 58;
Petition '923 Patent (Paper 1), 54-55;
Reply '430 Patent (Paper 18), 14-15.

Motivation to Combine – Jobin Agrees That Moving the Code Location Is Beneficial

113. Due to the messy nature of the liquid and coffee grounds present during extraction process, it was also known that optical codes must be placed in a location away from the liquid injection and piercing site. This is because hot water, steam, and coffee grounds from piercing or prior extractions can soil the optical reader or code, rendering reading of the code unreliable.

Jobin Decl. '923 & '430 Patent (EX1003), ¶113;
Reply '923 Patent (Paper 18), 20;
Reply '430 Patent (Paper 18), 22.

Motivation to Combine – Yoakim Benefits From Jarisch's Code Placement

[0022] In another embodiment, the code is present on the rim of the capsule. In the most preferred embodiment, the code is present on the bottom of the rim of the capsule which is opposed to the lid of the capsule. The bottom of the rim is sufficiently away from the liquid injection and beverage delivery areas so that there is a lower risk for the code to become unreadable such if partly or totally hidden or soiled by beverage residues or otherwise (e.g., coffee particles). As

Jarisch (EX1005), [0022]

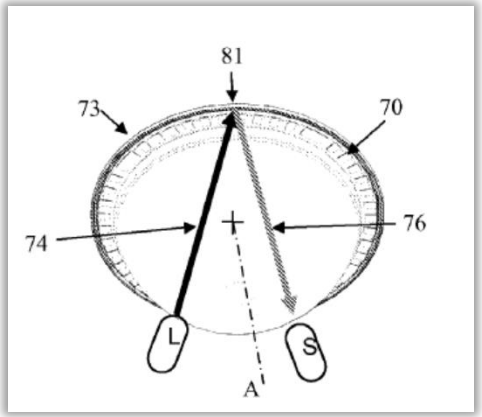

Jarisch (EX1005), FIG. 5

Petition '430 Patent (Paper 1), 47-49;
Reply '430 Patent (Paper 18), 22-23;
Petition '923 Patent (Paper 1), 44-46;
Reply '923 Patent (Paper 18), 20-21.

Motivation to Combine – Residue Is Left Over From Prior Brewing

Q. I'm just asking you more generally in the coffee arts, and as your experience as a purported expert, what you understand "residue" to mean.

A. Well, in a very broad sense, residue can be a solid left over after the brewing process. I have not provided an opinion on anything having to do with residue.

Howle Depo. Tr. '430 & '923 Patent (EX1067), 81:7-13

Reply '430 Patent (Paper 18), 22;
Reply '923 Patent (Paper 18), 20.

Motivation to Combine – K-fee's Argument that Centrifugal Forces Would Push Liquid Away from the Barcode Also Fails

- Yoakim utilizes a flow restriction seal that is designed to keep fluid from exiting the outlet (229) until a heightened pressure is reached

injection hole if the upper wall is also permeable. Preferably, the outlet **229** forms a flow restriction provided in the flow path of the beverage to provide a gradient of pressure in the capsule. Such restriction can be obtained by small orifices or a restriction valve such as described in above.

Yoakim (EX1004), [0507]

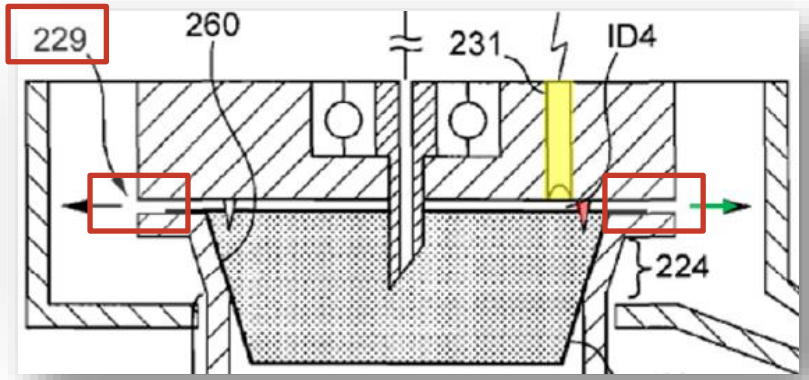

Yoakim (EX1004), FIG. 61 (annotated)

Reply '430 Patent (Paper 18), 23;
Reply '923 Patent (Paper 18), 21.

Motivation to Combine – The Environment in a Coffee Brewing System Can Be "Harsh"

Howle describes the environment in a coffee brewing system as a "harsh" environment from which materials would need protection

Further, an attempt to introduce the externally located Jarisch capsule holder into the embodiment of Figs. 61 and 62 of Yoakim would also require an expensive special sealed system that would protect the detector from the harsh environment of the machine during coffee making.

Howle Decl. '923 Patent (EX2017), ¶95

Howle Decl. '430 Patent (EX2017), ¶151;
Reply '430 Patent (Paper 18), 22;
Reply '923 Patent (Paper 18), 20.

Motivation to Combine – The Piercing Location Would Impact Code Reading

- Howle testified that Yoakim's Figure 61 depicts the piercing element in ***the same location*** as the barcode, which – upon closing – would pierce the membrane in the same location that is meant to be read ***after*** closing.

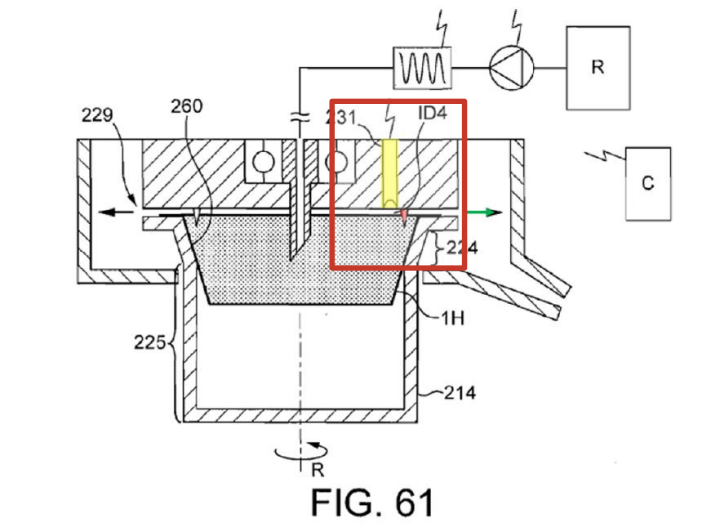

Yoakim (EX1004), Fig. 61 (annotated)

THE WITNESS: It would be sensed at the beginning of the brewing process.

BY MR. MCCRAW:

Q. Okay. So it would be sensed at the beginning of the brewing process after the chamber is closed; is that right?

A. I believe that's accurate. After the chamber is closed, it would have to be placed in proximity to the capsule.

Howle Depo. Tr. '430 &'923 Patent (EX1067), 96:13-21

Reply '430 Patent (Paper 18), 22;
Reply '923 Patent (Paper 18), 21.

Motivation to Combine – No Substantial Reconstruction

Jarisch teaches exactly how to move a code in a centrifugal system like Yoakim's to the bottom of the flange and read it

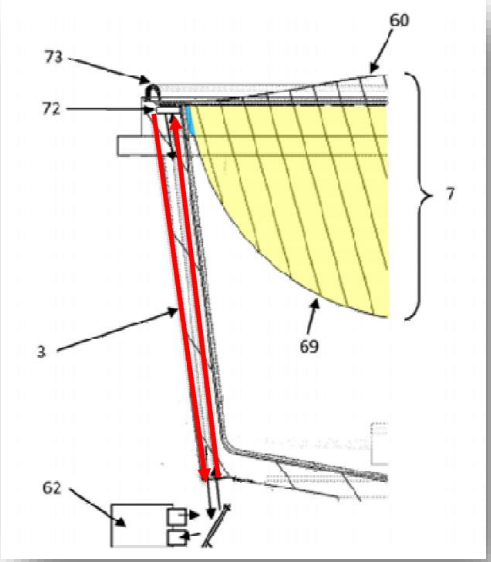

Jarisch (EX1005), FIG. 4 (annotated)

[0082] In the embodiment of the FIG. **4**, the light source is placed at the bottom of the centrifugal cell **3**. This cell is light conductive allowing the beam to reach the bottom side **72** of its rim **73**. The reflected light is conducted by the transparent (or light conductive) centrifugal cell **3** to reach the sensor **62**. In case that the sensor **62** cannot be aligned with the transparent part of the centrifugal cell **3**, a mirror can be placed as illustrated in the FIG. **4** to deflect the forward and backward beams.

Jarisch (EX1005), [0082]

Petition '430 Patent (Paper 1), 48-49;
Petition '923 Patent (Paper 1), 45-46;
Reply '430 Patent (Paper 18), 23-25;
Reply '923 Patent (Paper 18), 21-24.

Motivation to Combine – Bodily Incorporation Not Required

- Jarisch depicts a ***straight chamber*** to transmit light
- None of Howle's concerns about "undesired refraction" apply
- Yoakim ***does not prohibit*** a straight chamber
- K-fee ignores a POSITA's ordinary creativity to incorporate Jarisch's straight chamber

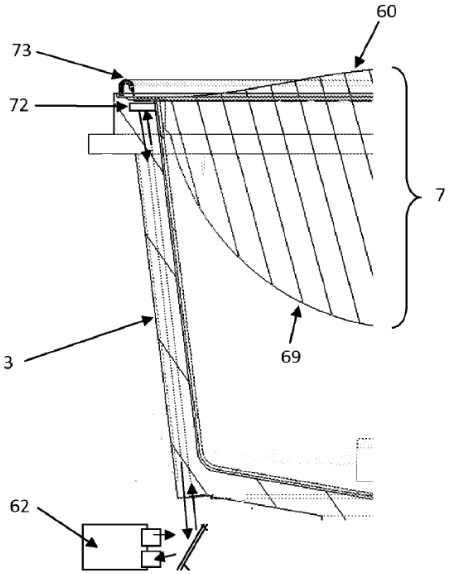

Jarisch (EX1005), FIG. 4

Reply '430 Patent (Paper 18), 24-26;
Reply '923 Patent (Paper 18), 22-24.

Motivation to Combine – Howle's Inconsistent Positions

When arguing for Priority to K-fee's applications, Howle says the opposite:

a barcode under the flange. Moreover, a POSITA would have understood that the placement of the detector could be moved depending on the placement of the identifier. This is illustrated in the second German application by its depictions of various detector locations. *See, e.g.*, Figs 1-3, 11-13, 15.

Howle Decl. '430 Patent (EX2017), ¶74

Reply '430 Patent (Paper 18), 24-26;
Reply '923 Patent (Paper 18), 22-24.

Motivation to Combine – No Substantial Reconstruction

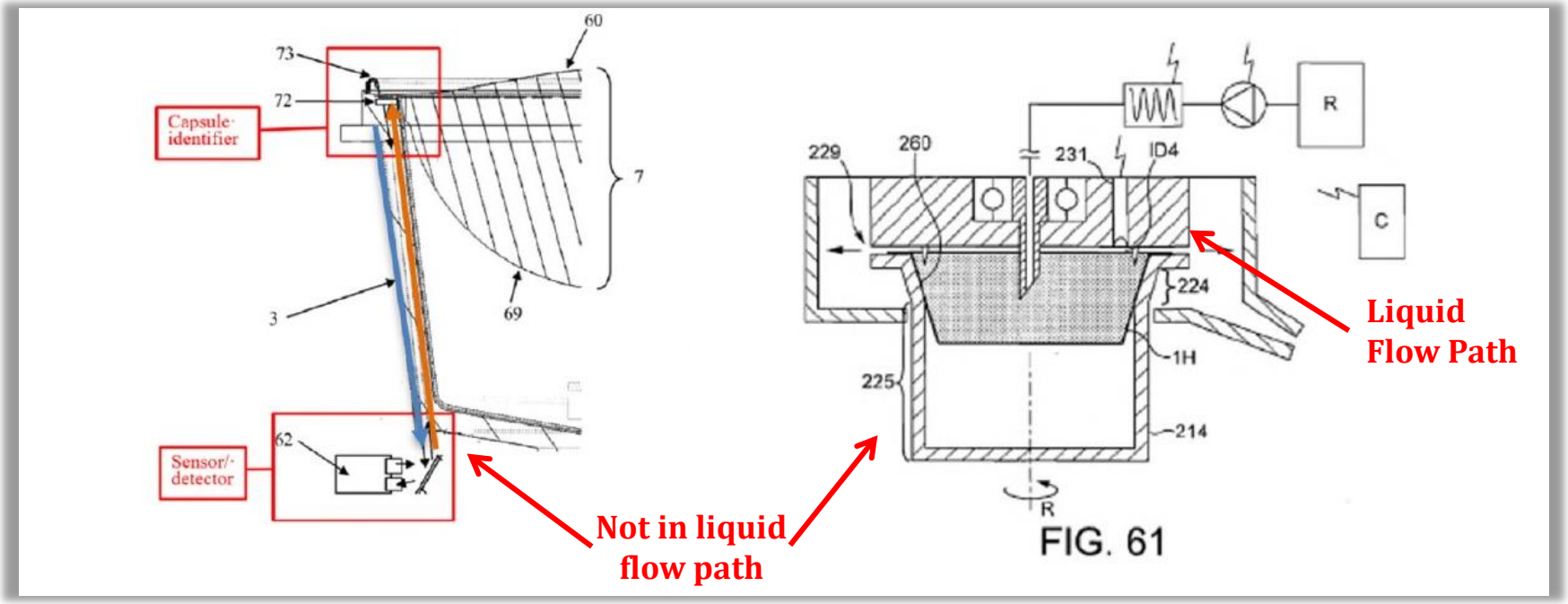

Jarisch (EX1005), FIG. 4 (annotated)

Yoakim (EX1004), FIG. 61 (annotated);
Reply '430 Patent (Paper 18), 23-26;
Reply '923 Patent (Paper 18), 21-24.

Motivation to Combine – No Substantial Reconstruction

Like Yoakim, Jarisch teaches holding and driving the capsule in rotation:

[0023] The invention further relates to a system for preparing a beverage from a capsule as aforementioned and further comprising a beverage preparation device; wherein the device comprises capsule holding means for holding the capsule and rotational drive means for driving the holding means and capsule in rotation along said axis of rotation and reading means arranged for reading the code when the capsule is rotated along said axis.

Jarisch (EX1005), [0023]

Reply '430 Patent (Paper 18), 21-22;
Reply '923 Patent (Paper 18), 23-26.

Motivation to Combine – Jarisch and Yoakim are Highly Compatible

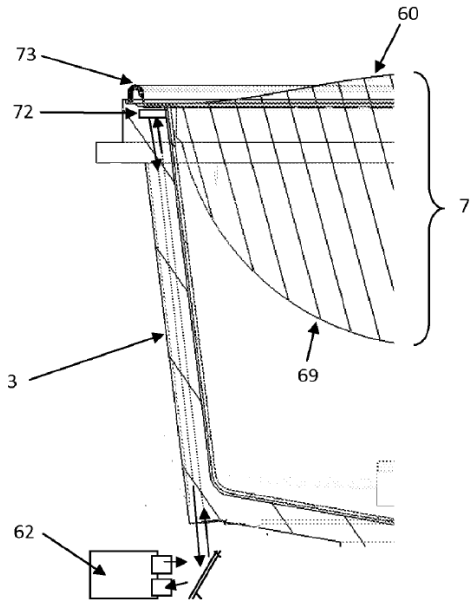

Fig. 4

Jarisch (EX1005), FIG. 4

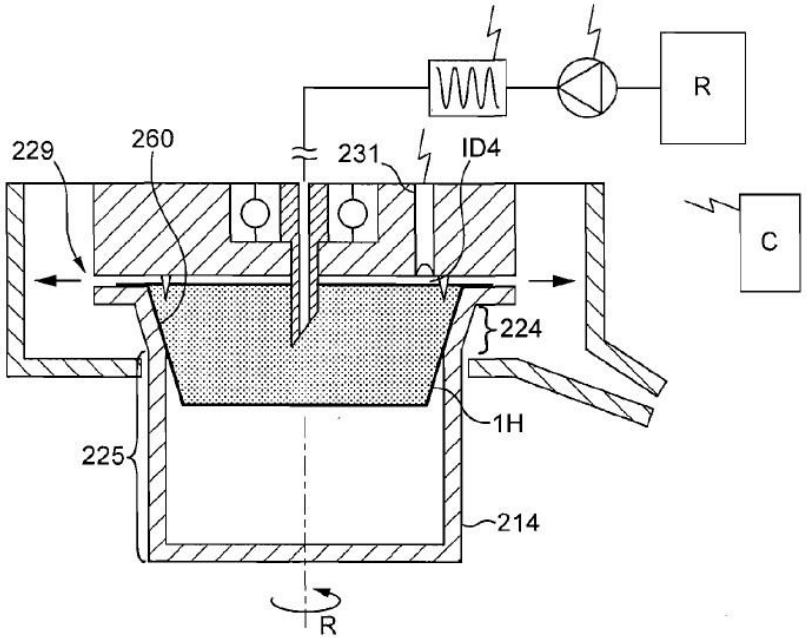

FIG. 61

Yoakim (EX1004), FIG. 61

Motivation to Combine – Jarisch and Yoakim are Highly Compatible

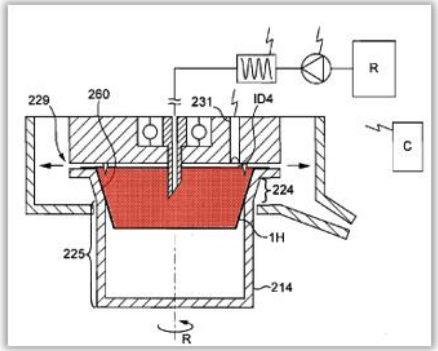

Yoakim (EX1004), FIG. 61

[0006] The invention relates more particularly to the identification of the capsule by means of a code. The code may be necessary to control parameters in the beverage preparation device such as liquid or beverage flow rate, pressure, rotational speed, temperature and combinations thereof.

Jarisch (EX1005), [0006]

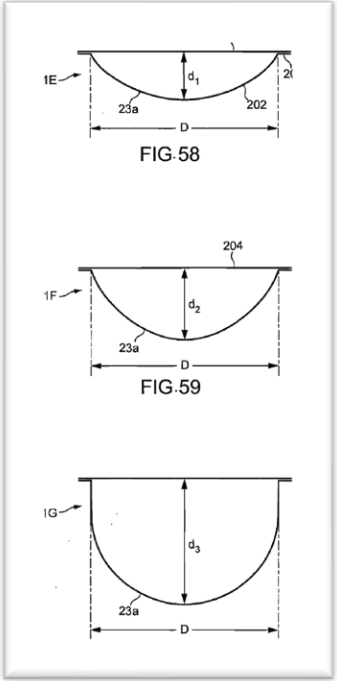

Yoakim (EX1004) FIGs. 58-60

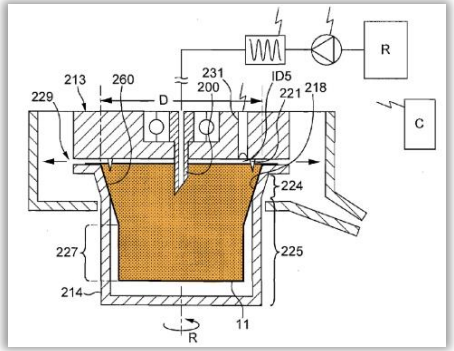

Yoakim (EX1004), FIG. 62

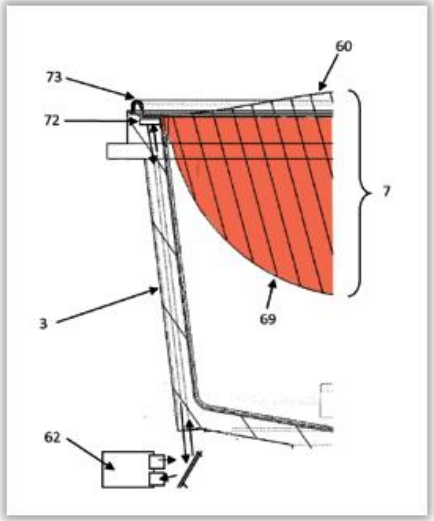

Jarisch (EX1005), FIG. 4

Reply '923 Patent (Paper 18), 13;
Jobin Decl. '430 Patent (EX1003), ¶166;
All color has been added to figures.

Motivation to Combine – Jarisch's Bit Code Does Not Teach Away From Yoakim's "Barcode"

K-fee has not provided any evidence that Yoakim uses the term "barcode" differently from its ordinary use in the art

On this record, Patent Owner's argument does not undercut the sufficiency of Petitioner's evidence because, absent some reason to conclude otherwise, we presume the "barcode" of Yoakim is a "barcode" as that term is ordinarily used in the art. That plain and ordinary meaning satisfies the district court's construction of the term. Ex. 1052, 11 (district court noting Patent Owner's assertion during prosecution before the EPO that "when reference is only made it [sic] to a 'Barcode', the person skilled in the art then knows that this always and exclusively refers to the 'classic Barcode'").

Decision '430 Patent (Paper 9), 33

Decision '923 Patent (Paper 9), 29;
Reply '430 Patent (Paper 18), 26;
Reply '923 Patent (Paper 18), 24.

Motivation to Combine – Jobin Agrees Jarisch is Not Limited to a Bit Code

Q. Do you have an opinion as to whether the use of a bitcode in Jarisch would be more reliable than the use of a barcode?

THE WITNESS: It appears to me, because they give some different examples of codes that could be used, that the primary teachings of Jarisch, in my view, is teaching the location and the method for reading and retrieving the barcode -- or the optical code information, rather, from the bottom of the rim.

That's an area that provides more reliable reading.

Jobin Depo. Tr. (EX2019), 86:2-14

[0017] Preferably, the code is an optical code. The code may be a bit code formed by a series of discrete polygonal (e.g., rectangles or squares) or dot surfaces printed on the container and/or embossed in the container.

[0087] Optionally (FIG. 7), the code comprises different color patterns combined with a color reading device. The

Jarisch (EX1005), [0017], [0087]

Reply '430 Patent (Paper 18), 26;
Reply '923 Patent (Paper 18), 24-25.

Motivation to Combine – There Is No Inconsistency

- K-fee failed to analyze the prosecution claims, the Examiner's rejection, or any of the references
- The prior art combination cited in this IPR is different from the prior art referenced during prosecution of Jarisch
- During prosecution of Jarisch, Petitioner never disparaged combining Yoakim with Jarisch, or with any other references
- ***Using Jarisch for its own disclosure and motivation is not inconsistent with Jarisch's patentability over art lacking Jarisch's teachings***

Decision '923 Patent (Paper 9), 28;
Decision '430 Patent (Paper 9), 32;
Reply '430 Patent (Paper 18), 5;
Reply '923 Patent (Paper 18), 25-26.

K-fee's Foreign Priority Documents Do Not Support the Challenged Claims

Petition '430 Patent (Paper 1), 38-46;
Reply '430 Patent (Paper 8), 1-9.

’430 Priority – Undisputed Issues

- February 2011 and July 2010 applications **do not provide** written description support for the claims
- September 2010 application does not provide written description support for **claims 5 and 7-10** because it does not disclose “a capsule including indentations in the side wall”

Petition ’430 Patent (Paper 1), 38-39, 44;
Reply ’430 Patent (Paper 18), 1.

’430 Priority – Disputed Issues

- September 2010 Application does not provide written description support for Claims 1-10 of the ’430 Patent because:
  - No disclosure of a **barcode** “on the bottom side of the flange” **in FIGs. 16-18**
  - No “linked” disclosure for **the ’430 Patent claimed invention**
    - No “blaze marks” linking disparate embodiments
    - Element 2.4.2 “detection means” is not a “common identifier”
    - No common brewing chamber linking embodiments
  - No disclosure of an **upper end portion with an annular convexity**

Petition ’430 Patent (Paper 1), 39-42;
Reply ’430 Patent (Paper 18), 1-9.

’430 Priority – The September 2010 Application Fails to Disclose the ’430 Patent Claimed Invention

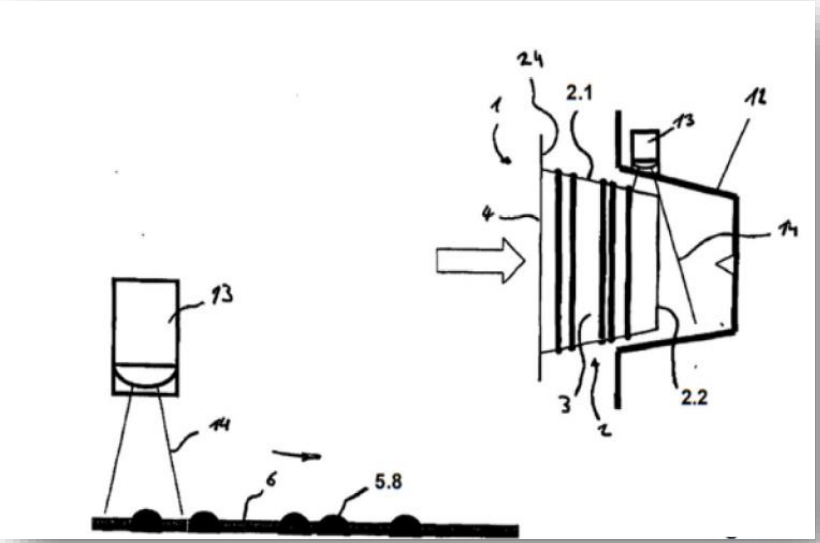

Sept. 2010 App. (EX1047), FIG. 1

The embodiment depicted in Figure 1 does not disclose:

- Holding arms
- Dropping box
- Barcode under the flange
- Capsule with annular convexity and annular concavity
- Seal

Petition ’430 Patent (Paper 1), 40;
Jobin Decl. ’430 Patent (EX1003), ¶¶149-150.

’430 Priority – The September 2010 Application Fails to Disclose the ’430 Patent Claimed Invention

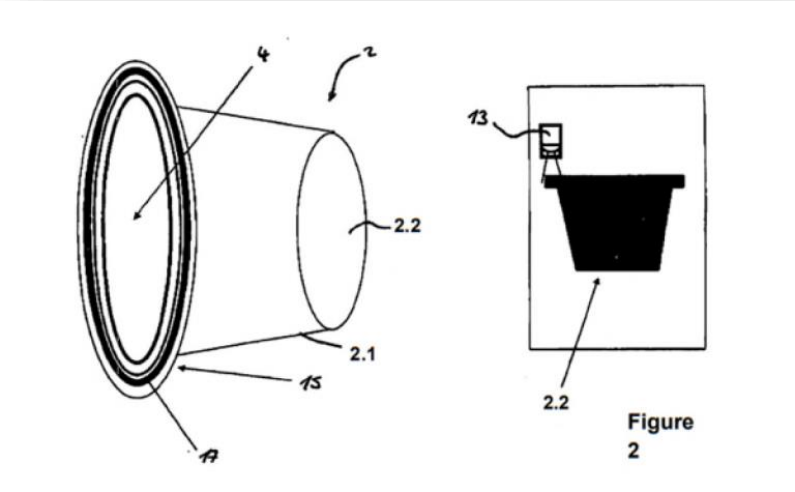

Sept. 2010 App. (EX1047), FIG. 2

The embodiment depicted in Figure 2 does not disclose:

- Holding arms
- Dropping box
- Barcode under the flange
- Capsule with annular convexity and annular concavity
- Seal
- Indentations on the side wall of the capsule

Petition ’430 Patent (Paper 1), 41;
Jobin Decl. ’430 Patent (EX1003), ¶151.

’430 Priority – The September 2010 Application Fails to Disclose the ’430 Patent Claimed Invention

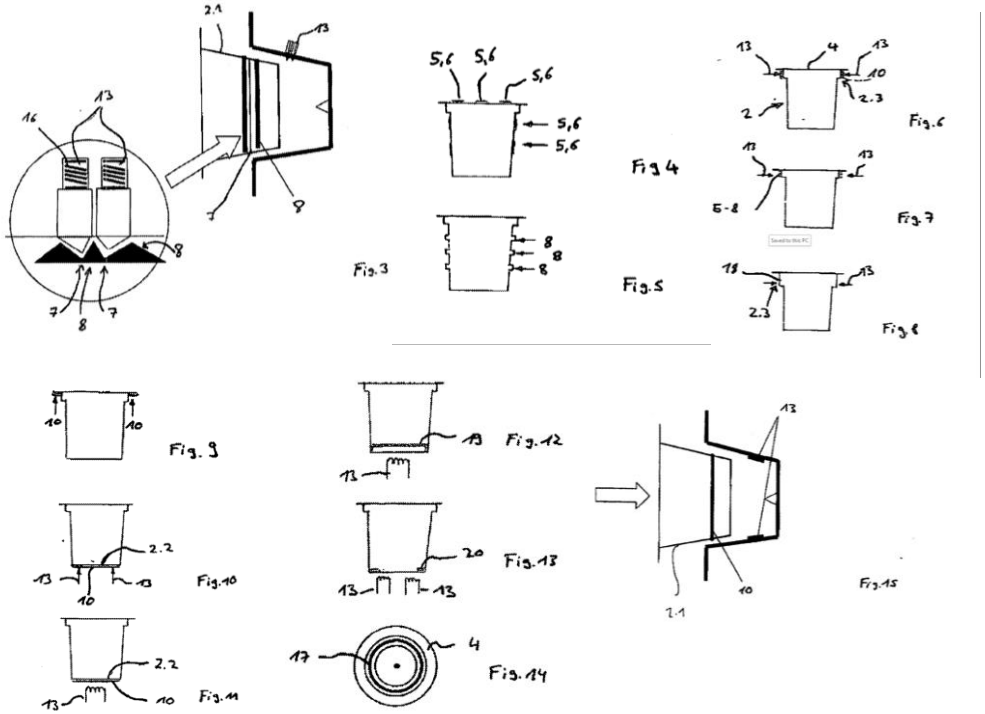

Sept. 2010 App. (EX1047), FIGs. 3-15

The embodiments depicted in Figures 3-15 do not disclose at least the following:

- Holding arms
- Dropping box
- Barcode under the flange
- Capsule with annular convexity and annular concavity
- Seal

Petition ’430 Patent (Paper 1), 41;
Jobin Decl. ’430 Patent (EX1003), ¶152.

’430 Priority – The September 2010 Application Fails to Disclose the ’430 Patent Claimed Invention

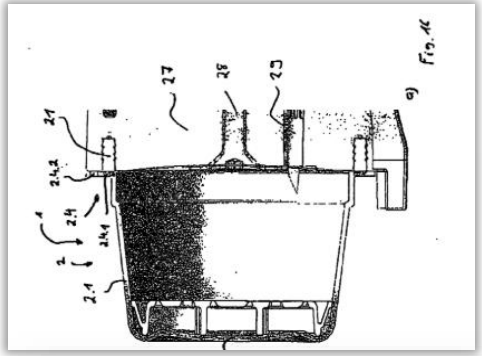

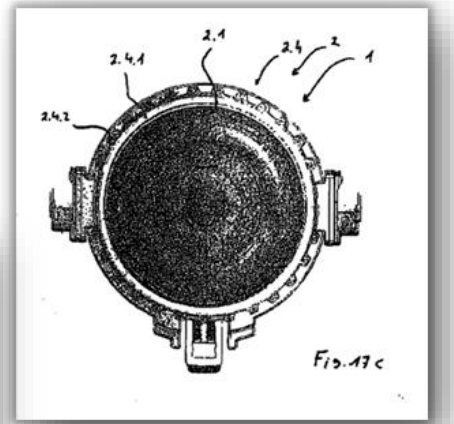

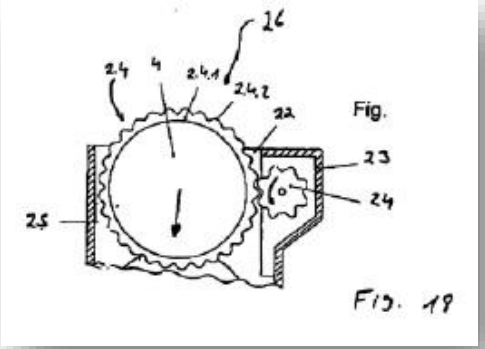

Sept. 2010 App. (EX1047), FIGs. 16-18

The embodiment depicted in Figures 16-18 does not disclose at least the following:

- Barcode under the flange
- Capsule with annular convexity and concavity

Petition ’430 Patent (Paper 1), 41-42;
Jobin Decl. ’430 Patent (EX1003), ¶153;
Reply ’430 Patent (Paper 18), 1.

’430 Priority – No Written Description Support for the Challenged Claims in EX1047

- Element 2.4.2 from Figures 16-18 does not disclose a barcode “on the bottom side of the flange”
- There is nothing in the EX1047 specification that teaches combining the barcode from Figure 2 with the embodiment of Figures 16-18
  - The different embodiments disclosed in EX1047 are not linked
  - Element 2.4.2 is not a “common identifier”
  - There is no “common brewing chamber” that applies to all the embodiments

Reply ’430 Patent (Paper 18), 1-7.

’430 Priority – Element 2.4.2 of Figures 16-18 Does Not Disclose a Barcode

- Element 2.4.2 is a **physical structure**

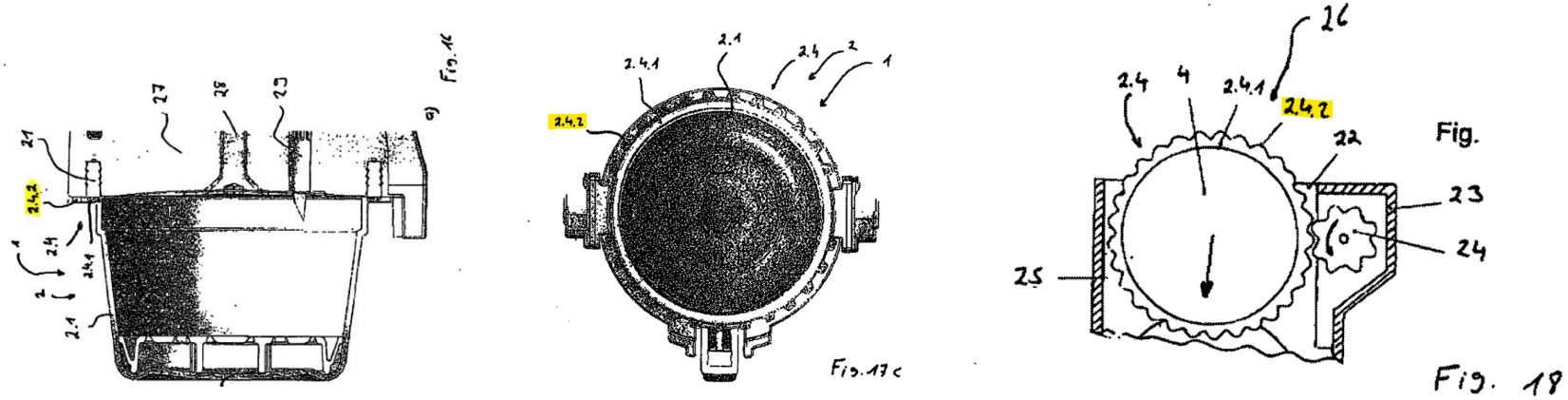

Sept. 2010 App. (EX1047), FIGs. 16A, 17C, 18

- This structure 2.4.2 is a “form-fitting means, friction-fitting means and/or detection means,” **not a barcode**

Reply ’430 Patent (Paper 18), 1-2.

’430 Priority – Element 2.4.2 Is a Toothed Ring

opposite the base region 2.2. This peripheral region 2.4 has, in its outer region, a form-fitting and/or friction-fitting means and/or a detection means 2.4.2. In the present case, this means 2.4.2, as can be gathered in particular from figures 17a-17c, is a toothed ring 2.4.2. Preferably a sealing surface 2.4.1

Sept. 2010 App. (EX1047), 41:22-27

Reply ’430 Patent (Paper 18), 1-2;
Petition ’430 Patent (Paper 1), 41-42;
Jobin Decl. ’430 Patent (EX1003), ¶153.

’430 Priority – The Toothed Ring Is Not On the Bottom of Flange

The form-fitting means, friction-fitting means and/or detection means is preferably a toothed ring or toothed-ring segment provided, in particular, on the outer circumference of the periphery. The teeth of this

Sept. 2010 App. (EX1047), 35: 8-11

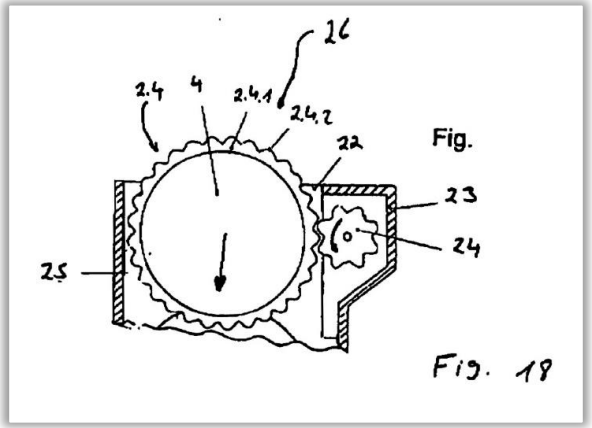

Sept. 2010 App. (EX1047), FIG. 18

Reply ’430 Patent (Paper 18), 2;
Petition ’430 Patent (Paper 1), 41-42;
Jobin Decl. ’430 Patent (EX1003), ¶153.

’430 Priority – Howle’s Testimony That 2.4.2 Is On The Bottom of The Flange Is Rebutted By Jobin

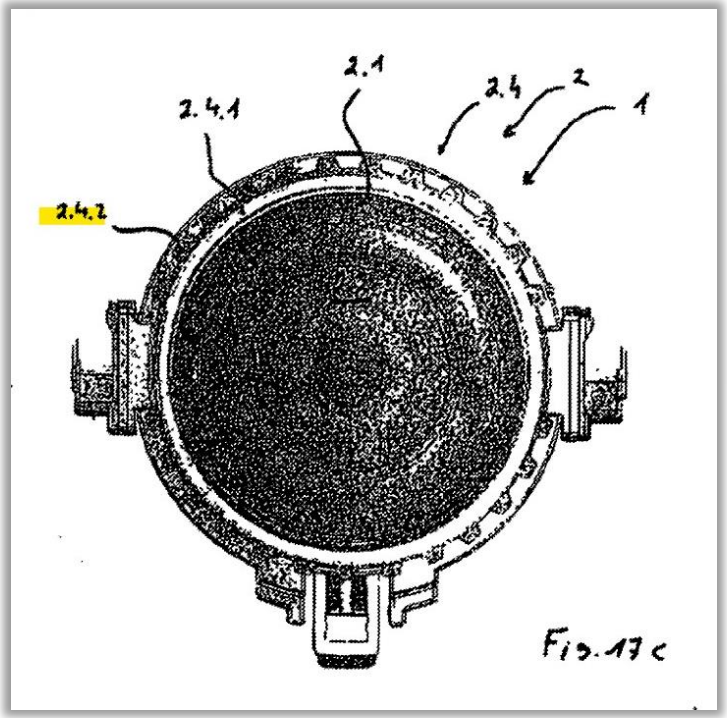

Sept. 2010 App. (EX1047), FIG. 17C

154. Figures 17a-17c show other designs of toothed ring identifier 2.4.2 located on the “outer region” of the peripheral region 2.4 from FIG. 16, and explains that if this feature was not present “the capsule could not be inserted into the brewing chamber but would fall through into a waste container.” (Ex. 1047 at p. 12, line 37 – p. 13, line 14.) In my opinion, Figures 17a-17c, which utilize a physical toothed ring, or

Jobin Decl. ’430 Patent (EX1003), ¶154

The outer circumference is where the teeth are formed, and that's what 2.4.2 is referring to.

Jobin Depo. Tr., IPR2022-01574, (EX2018), 191:20-21.

Petition ’430 Patent (Paper 1), 41-42.

’430 Priority – Nothing in EX1047’s Specification Teaches Combining the Barcode from Figure 2 With Figures 16-18

- The different embodiments disclosed in EX1047 are not linked:
  1. No teaching or guidance for combining or linking disparate embodiments
  2. Catchall statements do not link any claim features
  3. Multiple-dependent claims do not provide ‘blaze marks’

Reply ’430 Patent (Paper 18), 3-4;
Petition ’430 Patent (Paper 1), 40-46;
Jobin Decl. ’430 Patent (EX1003), ¶¶155-160.

’430 Priority – The Embodiments of EX1047 are Not “Linked” to Support the Claimed Invention

“A patent owner cannot show written description support by picking and choosing claim elements from different embodiments that are never linked together in the specification… The written description requirement is **not met** when, as here, the specification provides at best disparate disclosures that **a skilled artisan might have been able to combine** in order to make the claimed invention.”

Flash-Control LLC v. Intel Corp., 2021 WL 2944592, at *4 (Fed. Cir. 2021)

Petition ’430 Patent (Paper 1), 40;
Reply ’430 Patent (Paper 18), 2.

’430 Priority – The Embodiments of EX1047 Are Not “Linked” to Support the Claimed Invention

- Nothing in the EX1047 specification links Figure 2 and Figures 16-18:

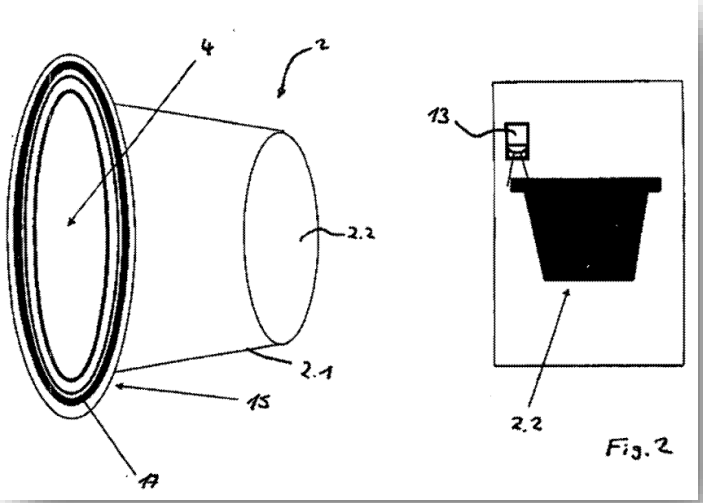

Sept. 2010 App. (EX1047), FIGS. 2

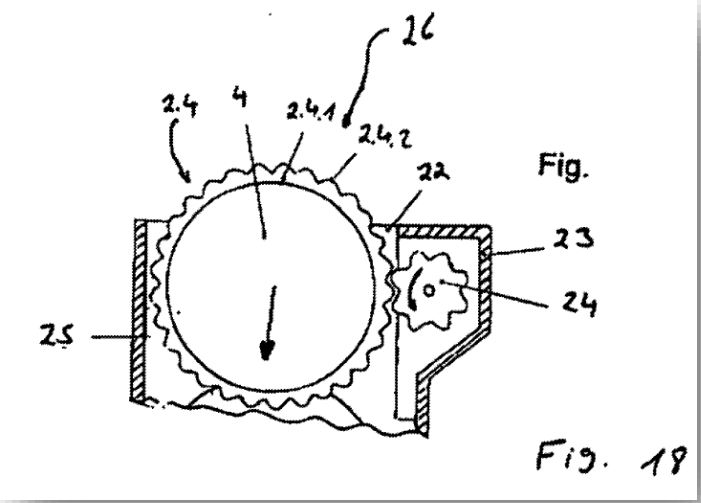

Sept. 2010 App. (EX1047), FIGS. 18

Reply ’430 Patent (Paper 18), 7.

’430 Priority – The Embodiments of EX1047 Are Not “Linked” to Support the Claimed Invention

Obviousness cannot compensate for a lack of written description support

> “To the extent that [K-fee] contends that a person of skill in the art would isolate and combine aspects from various embodiments in the specifications . . . to obtain the claimed invention, [K-fee] relies upon the wrong test. ‘[A] description that merely renders the invention obvious does not satisfy the [written description] requirement.’” *Purdue Pharma LP v. Recro Tech. LLC*, 694 Fed.Appx. 794, 797-98 (Fed. Cir. 2017).

Petition ’430 Patent (Paper 1), 46

Reply ’430 Patent (Paper 18), 7-8.

’430 Priority – “What has been said” Does Not Combine Embodiments

Once the identifier has been sensed, it is compared with a reference identifier and, for the case where these are identical, operation of the coffee machine is permitted. For the case where these identifiers do not coincide, in particular operation of the pump which forces, for example, hot water through the brewing chamber is prevented.

What has been said in relation to the identifier applies to all the other examples.

Sept. 2010 App. (EX1047), 37:38-38:9

Petition ’430 Patent (Paper 1), 45;
Reply ’430 Patent (Paper 18), 2-3.

’430 Priority – Multiple-Dependent Claims Do Not Support Written Description

8. The portion capsule (1) as claimed in one of the preceding patent claims, characterized in that the identifier is a metallic region (11).

9. The portion capsule (1) as claimed in one of the preceding patent claims, characterized in that the identifier is a ferro-magnetic region (12).

10. The portion capsule (1) as claimed in one of the preceding patent claims, characterized in that the identifier is an RFID.

11. The portion capsule (1) as claimed in one of the preceding patent claims, characterized in that the identifier is a barcode (17).

12. The portion capsule (1) as claimed in one of the preceding patent claims, characterized in that it has an insert element (19) with an identifier.

Sept. 2010 App. (EX1047), claims 8-12

No claims directed to a barcode on the bottom of the flange or numerous other ’430 Patent Limitations

“Title 35 forbids this type of claim drafting because it can—as here— lead to bizarrely complex chains of cross-references claims” *FWP IP ApS v. Biogen MA, Inc.*, 749 Fed.Appx. 969, 977 (Fed. Cir. 2018).

Petition ’430 Patent (Paper 1), 45-46;
Reply ’430 Patent (Paper 18), 2-3.

’430 Priority – 2.4.2 Not A “Common Identifier”

All embodiments confirm 2.4.2 is a “form-fitting means, friction-fitting means and/or detection means” that is a form of toothed ring or gearwheel

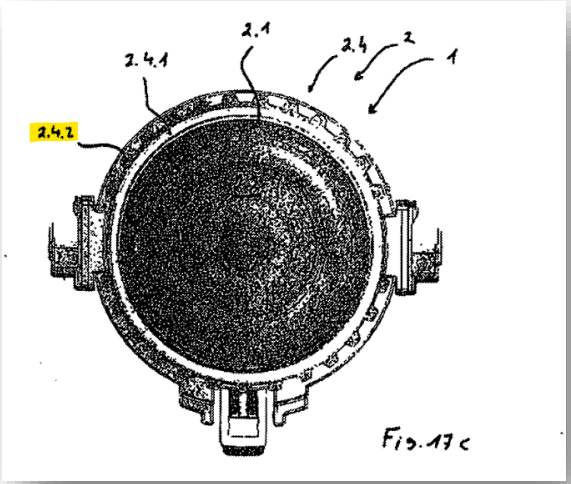

Sept. 2010 App. (EX1047), FIG. 17c

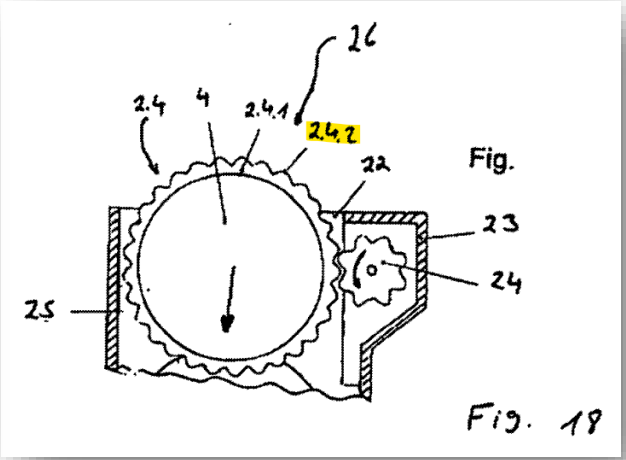

Sept. 2010 App. (EX1047), FIG. 18

Reply ’430 Patent (Paper 18), 3-4.

’430 Priority – 2.4.2 Not A “Common Identifier”

Element 2.4.2 detection means is always a physical structure

The form-fitting means, friction-fitting means and/or detection means is preferably a toothed ring or toothed-ring segment provided, in particular, on the outer circumference of the periphery. The teeth of this toothed ring or toothed-ring segment may be of any desired shape which is familiar to the person skilled in the art – for example from a construction of gearings and gear mechanisms. However, the teeth are preferably triangular, rectangular, square or undulating.

Sept. 2010 App. (EX1047), 35:8-17

Reply ’430 Patent (Paper 18), 3.

’430 Priority – 2.4.2 Is Distinct From Other Identifiers

List of designations:

1	Portion capsule
2	Basic element
2.1	Wall
2.2	Base region
2.3	Encircling ring
2.4	Peripheral region
2.4.1	Sealing region
2.4.2	Form-fitting means, friction-fitting means and/or detection means
3	Cavity
4	Membrane
5	Reflective surface
6	Matte surface
7	Concavity
8	Convexity
9	Print
10	Electrically conductive region
11	Metallic region
12	Brewing chamber
13	Detection means, scanner, sensor
14	Radiation
15	Peripheral region
16	Spring means
17	Barcode
18	Dimension of the portion capsule
19	Insert element, screen
20	Ferro-magnetic region
21	Seal
22	Insertion-shaft opening
23	Insertion-shaft housing
24	Form-fitting means, pinion
25	Inner wall of insertion shaft
26	Insertion shaft
27	Brewing chamber
28	Water inlet
29	Piercing spike

Sept. 2010 App. (EX1047), 44

Reply (Paper 18), 3.

’430 Priority – No “Common Brewing Chamber”

It has therefore been an object of the present invention to provide a portion capsule which is suitable just for a quite specific coffee machine.

coffee machine. Individualize means, in particular, that portion capsules which are not suitable for the respective coffee machine cannot be introduced into the same and/or drop out again directly and/or that the coffee machine can be operated only using the correct capsules. A sensor/detection means provided on the coffee machine preferably senses this identifier and compares it preferably with a stored identifier. The

Sept. 2010 App. (EX1047), 30:17-19, 31:24-31;
Reply ’430 Patent (Paper 18), 4-5.

’430 Priority – No “Common Brewing Chamber”

Jobin explained that the actual configuration and implementation of different brewing chambers is by no means uniform

> Q. If given a brewing chamber, would a person of ordinary skill in the art understand how to integrate that brewing chamber into a coffee machine?

[…]

Jobin:

> the design details of a brewing chamber would depend upon the machine and that it's difficult to comment generally about how one would implement a brewing chamber.

Jobin Depo. Tr. (EX2019), 26:8-27:5

Reply ’430 Patent (Paper 18), 4.

’430 Priority – Figure 1 and Figure 16 Are Different Embodiments
Howle Agrees

FIG1- Brewing Chamber 12	FIG16- Brewing Chamber 27
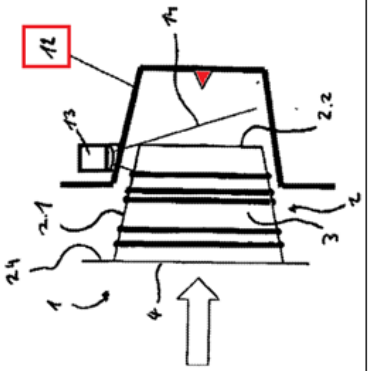	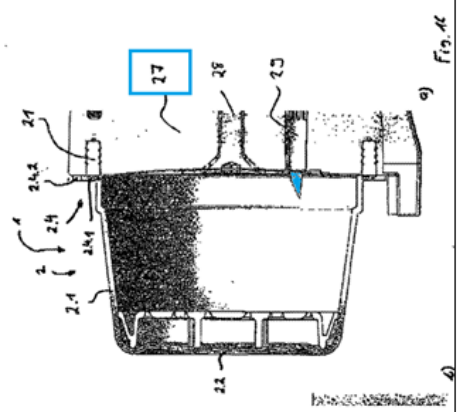

Sept. 2010 App. (EX1047), FIG.1 (annotated), FIG.16 (annotated)

THE WITNESS: Well, looking at Figure 1 as a person of ordinary skill, I would recognize that to be a different embodiment than what is shown in Figure 16. Figure 16 is the one that purely delineates or lays out what a piercing spike is, element 29.

Howle Depo. Tr., IPR2022-01574 (EX1066), 153:5-10

Reply ’430 Patent (Paper 18), 5-6.

’430 Priority – No “Common Brewing Chamber”

27 Brewing chamber

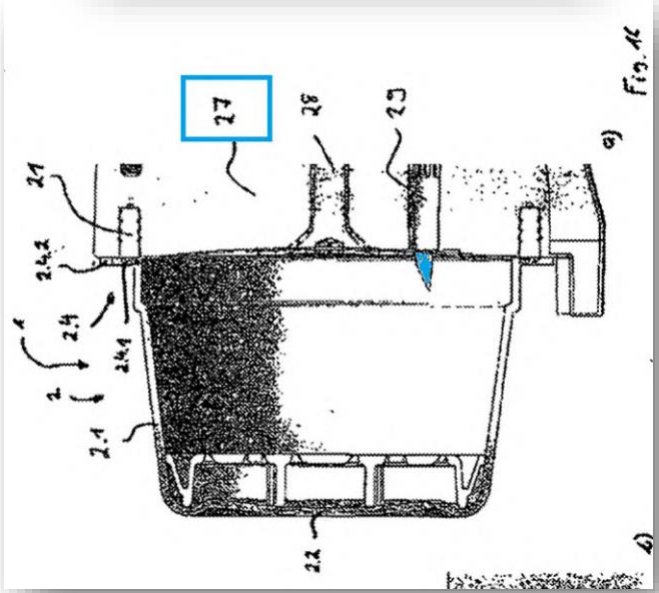

Sept. 2010 App. (EX1047), 44:36,
FIG. 16A (annotated)

toothed ring 2.4.2. Preferably a sealing surface 2.4.1 is provided in the peripheral region 2.4, on the inside in respect of this toothed ring, and interacts with sealing action with a seal 21, which is arranged on the brewing chamber 27. This seal 21 ensures that water which flows through the water inlet 28 flows into the capsule through an opening in the latter produced by the piercing spike 29, and does not flow around the capsule.

Sept. 2010 App. (EX1047), 41:27-35

Reply ’430 Patent (Paper 18), 5-7.

’430 Priority – No “Common Brewing Chamber”

12 Brewing chamber

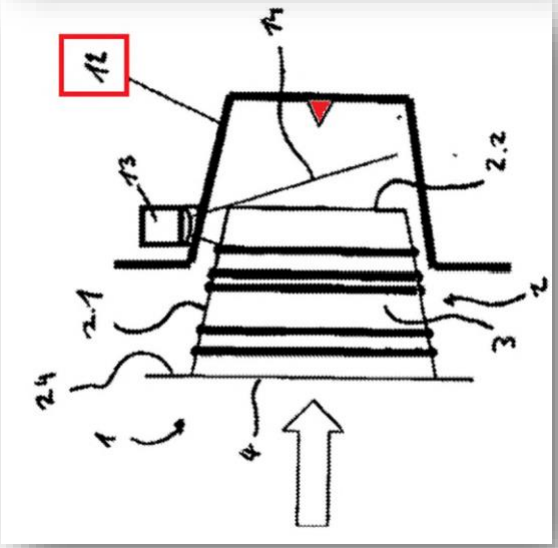

Sept. 2010 App. (EX1047), 44:25, FIG. 1 (annotated)

- Figure 2 has a different numbered brewing chamber than Figure 16
- Pierced from its base, not from cover like Figure 16

Reply ’430 Patent (Paper 18), 5-7.

’430 Priority – No “Common Brewing Chamber”

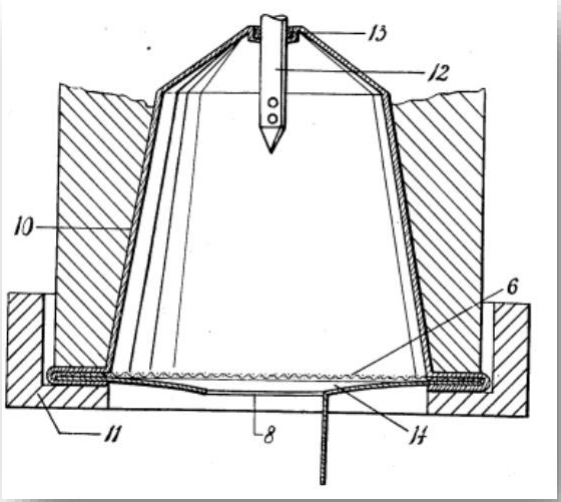

Favre (EX1018), FIG. 2

When the capsule is positioned in the housing **10**, its vertex is perforated by an injecting member **12** of the apparatus while a packing ring **13** is placed in the recess **4** in the capsule. The liquid for making up the drink is then injected under pressure by the member **12** into the capsule and mixes with the substance **9**. The pressure may be relatively high and may attain about 16 bar.

This pressure initially causes the membrane **5** to expand and finally to break along the line of weakness **7**.

A determinate aperture **8** opens through which the drink flows uniformly. It will be observed that the convex shape of the membrane **5** forms beneath the filter **6** a collecting chamber **14** which distributes the flow evenly over the cross-section of the capsule and the filter **6**.

Favre (EX1018), 2:17-31

Reply ’430 Patent (Paper 18), 6-7;
Petition ’430 Patent (Paper 1), 4.

’430 Priority – Nothing Links Figure 2 and Figures 16-18

EX1047 is clear when its embodiments are intended to reference one another:

Figure 4 shows essentially the embodiment according to figure 1, wherein this present case also illustrates

Figure 5 shows an alternative to the embodiment according to figure 3. Here too, the convexities 8

Figure 7 shows the embodiment according to figure 6, wherein, in the present case, reflective or matte

Sept. 2010 App. (EX1047), 39:5-9, 39:11-12, 39:29-30

Reply ’430 Patent (Paper 18), 7.

’430 Priority – No Disclosure of Annular Convexity in EX1047

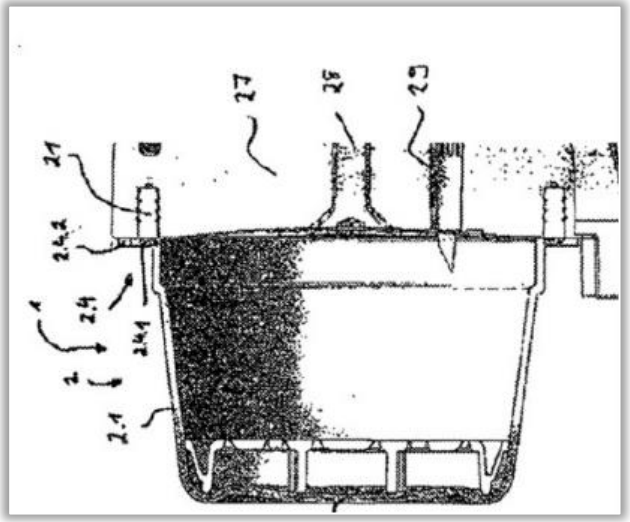

Sept. 2010 App. (EX1047), FIG. 16A

relative to the central axis of the base element.” There is no discussion of a capsule with annular convexity and annular concavity in the text of the September 2010 Application. All Figures in the September 2010 Application disclose to a person of ordinary skill in the art a capsule with a flat cover. As such, a POSITA would

159. A person of ordinary skill in the art would not consider Figure 16 to disclose a capsule with “an upper end portion that has an annular convexity and a lower end portion that has an annular concavity relative to the central axis of the base element,” because it also only depicts flat covered capsules – without convexity. Rather, taken

Jobin Decl. ’430 Patent (EX1003), ¶¶158-159

Sept. 2010 App. (EX1047), FIG. 16A;
Petition ’430 Patent (Paper 1), 42;
Reply ’430 Patent (Paper 18), 8.

’430 Priority – The Arched Line in Figure 16 Is Not the Capsule’s Membrane

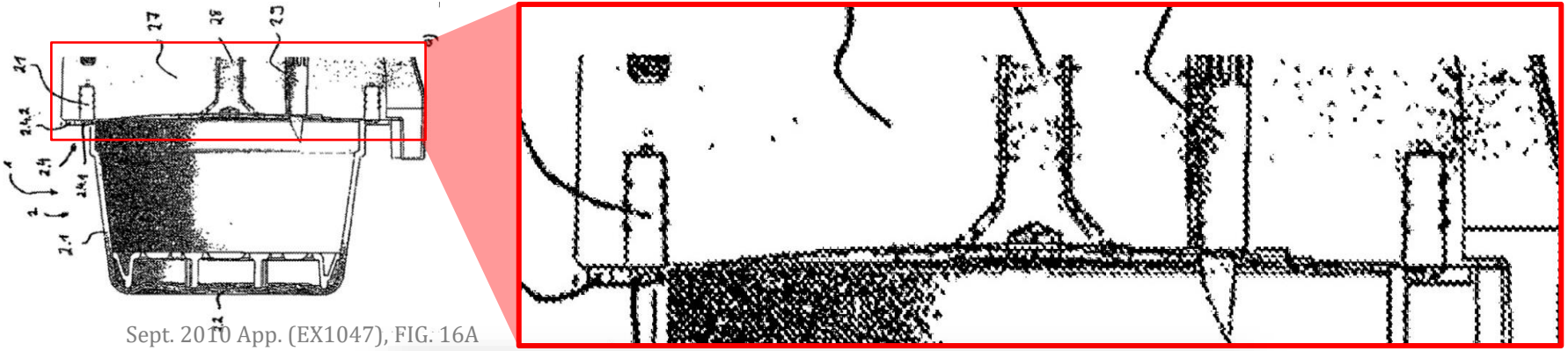

Sept. 2010 App. (EX1047), FIG. 16A

A What I observed is that the arched line is, in my view, not the membrane, because it doesn't make sense for the water inlet to be depicted inside of the membrane.

Jobin Depo. Tr., IPR2022-01574, (EX2018), 190:22-25

Reply ’430 Patent (Paper 18), 8.

’430 Priority – The Capsule in Figure 16 Is Pierced

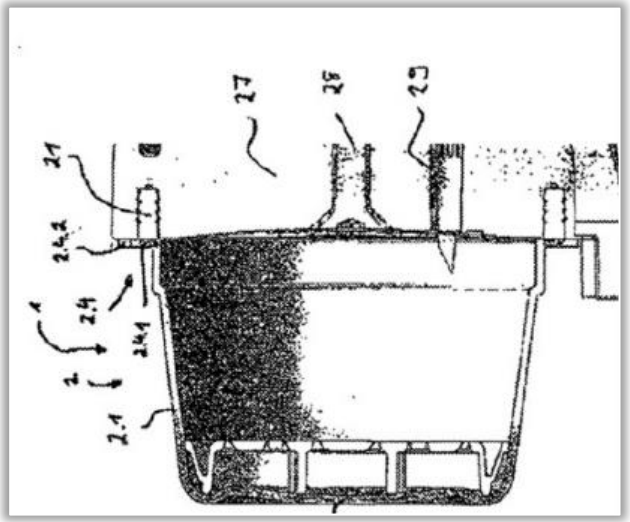

Sept. 2010 App. (EX1047), FIG. 16A

Q. Okay. And you understand that element 29 is a mandrel that pierces the capsule; correct?

A. Yes, sir.

Q. Okay. And you see that the sharp point at the end of element 29 has entered the capsule.

You agree with that?

A. I would say from this image, that looks to be the case, yes, sir.

Howle Depo Tr., IPR2022-01574, (EX1066), 170:4-11

Sept. 2010 App. (EX1047), FIG. 16A;
Reply ’430 Patent (Paper 18), 8.

’430 Priority – K-Fee Admits That a Pierced Capsule Cover Would be Flattened

capsule had an annular convexity.” Pet. at 43. However, a POSITA would have understood that upon the cover being pierced by the mandrel, the once-convex cover would be flattened as the volume of air inside the capsule decreases. Ex. 2017, ¶90.

POR ’430 Patent (Paper 15), 55

Reply ’430 Patent (Paper 18), 8.

’430 Priority – Figure 16 Depicts Shading, Indicating a Dimensional Image

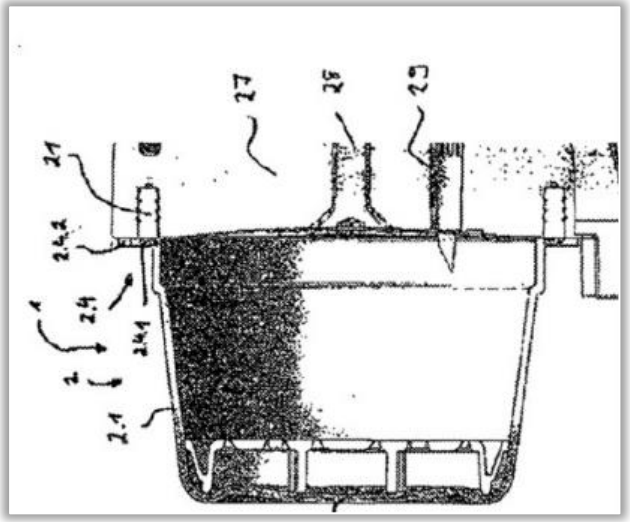

Sept. 2010 App. (EX1047), FIG. 16A

Q. Do you see the shading on the left side of capsule?

A. Yes, sir. I do see the shading.

Sept. 2010 App. (EX1047), FIG. 16A;
Howle Depo. Tr., IPR2022-01574, (EX1066), 169:23-170:3;
Reply ’430 Patent (Paper 18), 8.

’430 Priority – EX1047 Depicts Only Flat Covered Capsules

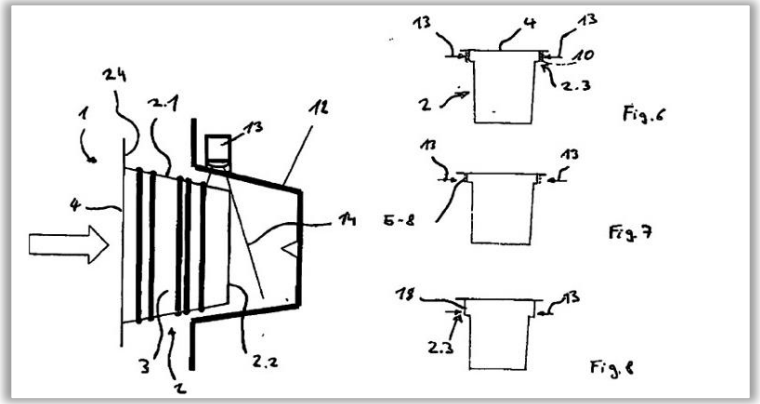

Sept. 2010 App. (EX1047), FIGs. 1, 6, 7-8

ordinary skill in the art a capsule with a flat cover. As such, a POSITA would understand that the September 2010 Application, taken as a whole, discloses capsules with flat covers – without convexity. Examples of such flat covers are depicted below in Figures 1 and 6 – 8:

Sept. 2010 App. (EX1047), see also FIGS. 2, 3, 4-5, 9-13, 15;
Jobin Decl. ’430 Patent (EX 1003), ¶158.

’430 Priority – The Arched Line Is the Rim of the Capsule Receding into the Curved Surface

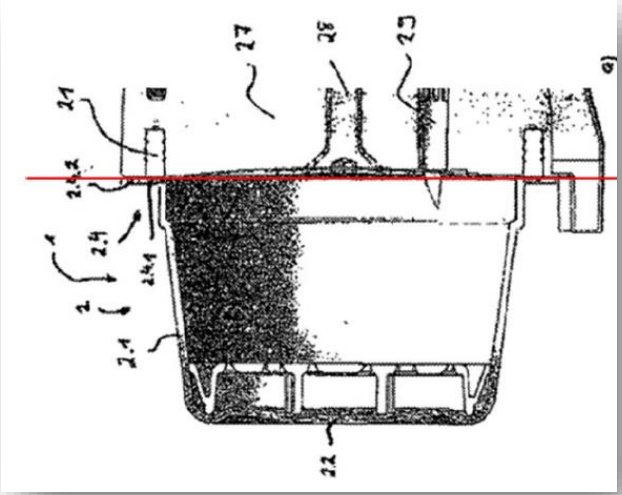

Sept. 2010 App. (EX1047), FIG. 16A

Q And how are you interpreting that line above that red line?

A Well, when I look at Figure 16A or Figure 16 in this -- in this Exhibit 1047, I see a flat membrane, and I see an arch that's going over that, and I interpret that to be the rim of the capsule receding into the curved surface.

Jobin Depo. Tr. IPR2022-01574 (EX2018), 190:3-10

’430 Priority – Figure 16 Depicts the *Depth* and *Inner Circumference* of the Capsule’s Body and Rim

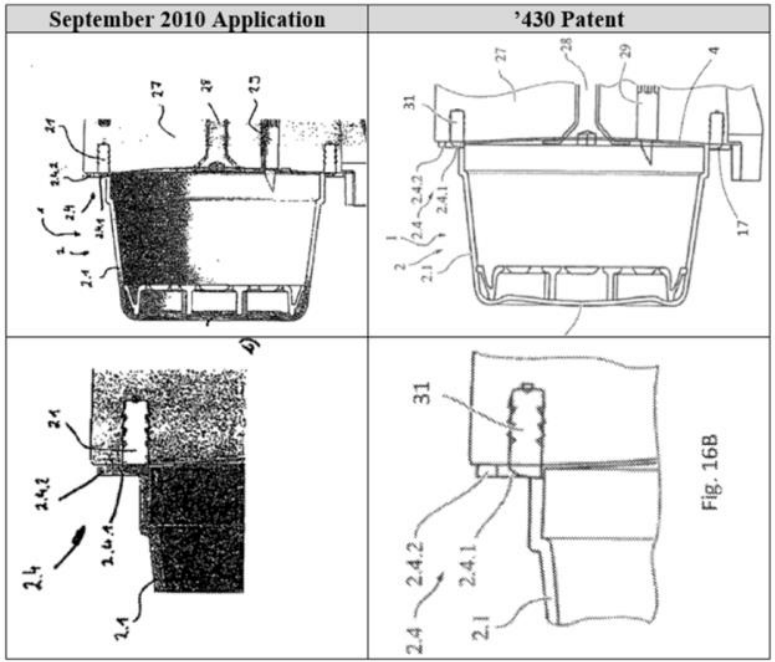

Sept. 2010 App. (EX1047), FIG. 16;’430 Patent (EX1001), FIG. 16

because it also only depicts flat covered capsules – without convexity. Rather, taken in the context of the September 2010 Application as a whole, Figure 16 appears to disclose a flat-membrane capsule further showing the depth and inner circumference of the capsule body and rim. This is shown below in Figure 16B (clearer images shown right from ’430 Patent):

Jobin Decl. ’430 Patent (EX1003), ¶159

Pet. (EX1001), 43.

’430 Priority – Figure 16B Shows No Annular Convexity

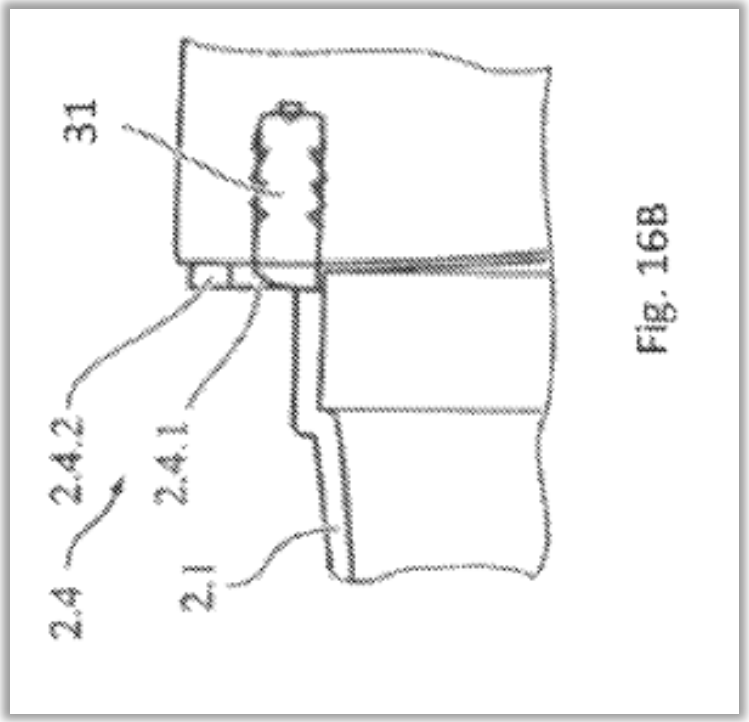

’430 Patent (EX1001), FIG. 16B

Petition ’430 Patent (Paper 1), 43-44;
Jobin Decl. ’430 Patent (EX1003), ¶159.

’430 Priority – No Inconsistency With Jobin’s Treatment of Jarisch

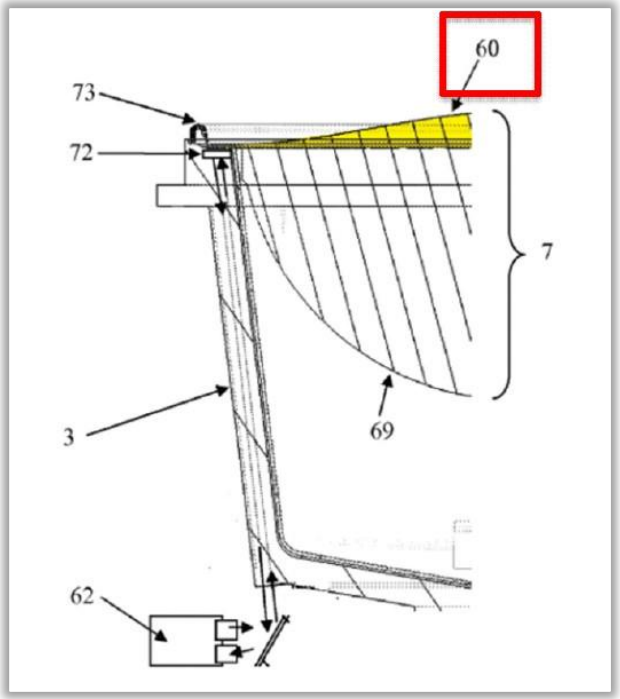

Jarisch (EX1005), FIG. 4 (annotated)

[0036] In the following examples (see FIG. **4**), the capsule comprises a cup-shaped body **69** extending by a flange-like rim **73**. A lid such as a foil or membrane (liquid-tight or permeable to liquid) **60** is connected to the body, e.g., sealed on the rim. The capsule is filled with beverage ingredient such as ground coffee.

Jarisch (EX1005), [0036]

- Image is an unshaded cross-section
- Membrane is clearly identified

Reply ’430 Patent (Paper 18), 9.

’923 Priority – Jarisch Is Prior Art to the ’923 Patent

- **Undisputed Issues:**
  - No single foreign application discloses the ’923 Patent’s claimed invention.
- **Disputed Issues:**
  - Krüger declaration should be given no weight and cannot be used to antedate Jarisch.

POR ’923 Patent (Paper 15), 4-7;
Reply ’923 Patent (Paper 18), 1-6;
Sur-Reply ’923 Patent (Paper 19), 13-16.

’923 Priority – Jarisch Is Prior Art to the ’923 Patent

- No single foreign application discloses the ’923 Patent claimed invention

> *“An applicant cannot show possession of an invention based upon a combination of several distinct previous applications unless he shows that one of the applications discloses the invention… In sum, 35 U.S.C. § 120 requires an applicant to meet the disclosure requirement of § 112, ¶ 1* ***in a single parent application*** *in order to obtain an earlier filing date for individual claims.’”*

Studiengesellschaft Kohle, MBH v. Shell Oil Co., 112 F. 3d 1561, 1564 (Fed. Cir. 1997)

Reply ’923 Patent (Paper 18), 1.

’923 Priority – K-fee Does Not Dispute That No Single Foreign Application Discloses the ’923 Patent Claims

- K-fee does not dispute that the February 2011 Application:
  - Is the only application disclosing grooves on the capsule body wall;
  - Does not disclose a barcode at all, let alone one on the bottom of the capsule flange (claims 1-16);
  - Does not disclose comparison of a barcode with a stored reference (claims 6/14); and
  - Does not disclose a capsule made of metal or with an electrically conductive section (claims 1-16)

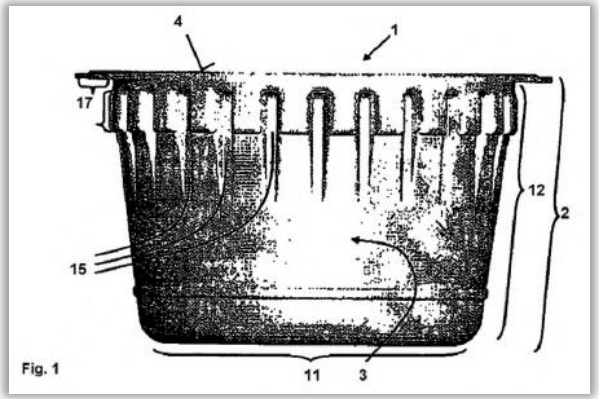

Feb. 2011 App. (EX1045), FIG. 1

Petition ’923 Patent (Paper 1), 40-41;
Jobin Decl. ’923 Patent (EX1003), ¶¶155-157.

’923 Priority – K-Fee Mis-Applies *In re Stempel* and Cannot “Swear Behind” Jarisch

- K-fee contends it can “swear behind” Jarisch by showing possession of “at least as much of the subject matter as relied upon by Petitioner from the Jarisch reference.”
- ***However:***
  - *In re Stempel* addressed specific facts and issues not applicable here
  - Subsequent cases have limited *In re Stempel* and clarified that the *complete* invention must be shown
  - Federal Circuit precedents and the MPEP confirm that a Rule 131 declaration cannot antedate an obviousness combination by showing possession of *less* than a complete claimed invention.

POR ’923 Patent (Paper 15), 11-15;
Reply ’923 Patent (Paper 7), 4-5;
Reply ’923 Patent (Paper 18), 2;
Decision ’923 Patent (Paper 9), 12-14.

’923 Priority – *In re Stempel* Addressed Specific Facts and Issues Not Applicable to the Present Case

	In re Stempel	This Case
Application-At-Issue	Includes genus-species claims	No genus-species claims
Asserted Prior Art Reference	Discloses the *same species* claimed in the application but does not disclose the broader claimed genus	Discloses some, but not all, elements claimed in the application
Rule 131 Affidavit	Inventor filed multiple affidavits demonstrating that they had conceived and reduced to practice the *claimed species*	Inventor filed a single declaration that alleges conception and reduction to practice of a *single claim element* of the application-at-issue (i.e. placing a code under the flange of a capsule), but not the claimed invention

Decision ’923 Patent (Paper 9), 12-14;
Reply ’923 Patent (Paper 7), 4-5;
Reply ’923 Patent (Paper 18), 2.

’923 Priority – *In re Stempel* Addressed Specific Facts and Issues Not Applicable in the Present Case

“The question before us is…When a domestic patent discloses only a single species of an invention and the applicant submits an affidavit under Rule 131 showing completion of the invention of that species prior to the effective date of the reference (which does not claim it), can that reference be used as a basis of the rejection of generic claims in the application?”

In re Stempel, 241 F.2d 755, 757 (1957 CCPA)

Reply ’923 Patent (Paper 18), 2.

’923 Priority – *In re Tanczyn* limited *In re Stempel* and Clarified the Requirements for Rule 131 Declarations

“[I]t seems necessary to comment on and to restrict somewhat certain broad language in Stempel…We never intended by the language used in Stempel to authorize the overcoming of references by affidavits showing that the applicant had invented, prior to the reference date, a part, some parts, or even a combination of parts, used to create an embodiment of his claimed invention, where the part or parts are not within the scope of the claims being sought…The primary consideration is whether, in addition to showing what the reference shows, the affidavit also establishes ***possession of either the whole invention claimed*** *or something falling within the claim,* ***in the sense that the claim as a whole reads on it****.”*

In re Tanczyn, 347 F.2d 830, 832-33 (CCPA 1965)

Reply ’923 Patent (Paper 7), 4;
Reply ’923 Patent (Paper 18), 2.

’923 Priority – Federal Circuit Precedent Requires Earlier Conception of the “Complete and Operative Invention”

> *“To have conceived of an invention, an inventor must have formed in his or her mind ‘a definite and permanent idea of* ***the complete and operative invention****, as it is hereafter to be applied in practice.’”*

Mahurkar v. C.R. Bard, Inc., 79 F.3d 1572, 1577 (Fed. Cir. 1996)

- The ’923 Patent claims require, *inter alia*, a single-serve capsule including: (i) a capsule made of metal or with an electrically conductive section, (ii) a barcode at all, let alone one on the bottom of the capsule flange, (iii) comparison of a barcode with a store reference, and (iv) a wall region that includes radially spaced and vertically oriented grooves that are free from extending to the bottom region.

Petition ’923 Patent (Paper 1), 40-41;
Jobin Decl. ’923 Patent (EX1003), ¶¶155-157;
Reply ’923 Patent (Paper 18), 5;
Decision ’923 Patent (Paper 9), 14.

’923 Priority – Krüger Declaration Does Not Establish Conception of the Complete Invention

- Krüger only establishes the filing date of his individual applications, but never establishes conception of the complete ’923 Patent’s claimed invention

> 22. Dr. Wolff, upon my instruction, filed the third German application, DE 10 2011 010 534 on February 7, 2011 (EX1045). Each of the embodiments contained in the third German application were conceived before the filing date of February 7, 2011.

Krüger Decl. ’923 Patent (EX2001), ¶22;
Reply ’923 Patent (Paper 18), 5-6.

’923 Priority – Krüger Declaration Does Not Establish Conception of the Complete Invention

- K-Fee fails to explain how EX1045’s vertical grooves relate to other ’923 claim limitations, including:
  - the rationale of a capsule utilizing ***both*** a barcode identifier and a groove identifier;
  - how a capsule configuration that uses both types of identifiers would operate
    - For e.g., EX1045 teaches a groove configuration that includes a shoulder with “an enlarged diameter” that would impede reading a code on the bottom of the flange
  - the fact that the grooved capsule in EX1045 includes a filter in the cavity, which the ’923 claims prohibit

Feb. 2011 German App. (EX1045), 30:27-30;
Reply ’923 Patent (Paper 18), 5-6.

’923 Priority – K-Fee Never Presents Evidence That Krüger Possessed the Complete and Operative Invention

“For conception, we look not to whether one skilled in the art ***could have*** *thought of the invention, but whether the alleged inventors actually had in their minds the required definite and permanent idea.”*

Burroughs Wellcome v. Barr Lab’ys, 40 F.3d 1221, 1229-1232 (Fed. Cir. 1994)

Reply ’923 Patent (Paper 18), 6.

’923 Priority – *In re Spiller* and *In re Stryker* Do Not Apply Here

- K-fee does not argue that additional features in its claims, which are not present in Jarisch, such as “the cavity including radially spaced and vertically oriented ribs,” would have been ***obvious over Jarisch***

> *“In the case before us the differences between the **claimed invention** and the reference disclosure are so small as to render **the claims obvious** over the reference.”*

In re Stryker, 58 CCPA 797, 799
(cited in *In re Spiller*, 500 F.2d 1170, 1177)

POR ’923 Patent (Paper 15), 15-18;
Reply ’923 Patent (Paper 18), 3.

’923 Priority – Krüger Declaration Should be Given Very Little Weight

*“The testimony of an inventor often is a **self-serving, after-the-fact attempt** to state what should have been part of his or her patent application.”*

Bell & Howell Document Mgmt. v. AlketSys., 132 F.3d 701, 706 (Fed. Cir. 1997) (emphasis added).

- Declaration dated 13 years after EX1047 was filed, 1.5 years after litigation, and 3 months after Institution
- No corroborating evidence was submitted with declaration (e.g. lab notebook, other evidence, etc.)

Reply ’923 Patent (Paper 18), 4.

Howle Is Not a POSITA

POSITA

- Bachelor's degree in engineering
- Five years of experience in design of mechanical beverage systems, or similar products
- Experience with sensors for recognizing an identifier

Decision ’923 & ’430 Patent (Paper 9), 8;
Reply ’923 Patent (Paper 18), 26;
Reply ’430 Patent (Paper 18), 27.

Howle's Academic Experience and Other Accolades are Irrelevant

POSITA

- **Bachelor's degree in engineering**
- Five years of experience in design of mechanical beverage systems, or similar products
- Experience with sensors for recognizing an identifier

Dr. Howle's experience exceeds this definition. Notably, Dr. Howle holds a Ph.D. in Mechanical Engineering—Mr. Jobin does not.[2] Ex.2017, ¶5. For over 30 years, Dr. Howle taught a variety of undergraduate and graduate courses in Mechanical Engineering and Materials Science at Duke University, and he served as the lead instructor for the entire mechanical engineering design sequence. *Id.* at

IRRELEVANT

Sur-Reply '923 Patent (Paper 19), 2;
Sur-Reply '430 Patent (Paper 19), 2;
Reply '923 Patent (Paper 18), 26;
Reply '430 Patent (Paper 18), 27;
Decision '923 & '430 Patent (Paper 9), 8.

Howle's Academic Experience and Other Accolades are Irrelevant

POSITA

- **Bachelor's degree in engineering**
- Five years of experience in design of mechanical beverage systems, or similar products
- Experience with sensors for recognizing an identifier

Moreover, Dr. Howle has been named a Fellow of the American Society of Mechanical Engineers, has been selected as finalist and winner of awards for products that he designed and he owns a licensed professional engineering

IRRELEVANT

Sur-Reply '923 Patent (Paper 19), 3;
Sur-Reply '430 Patent (Paper 19), 3;
Reply '923 Patent (Paper 18), 26;
Reply '430 Patent (Paper 18), 27;
Decision '923 & '430 Patent (Paper 9), 8.

There is No Dispute That Howle Does Not Meet the 5 Years of Experience In Design of Mechanical Beverage Systems

POSITA

- Bachelor's degree in engineering
- **Five years of experience in design of mechanical beverage systems**, or similar products
- Experience with sensors for recognizing an identifier

Q And you wouldn't have met the industry experience of five years or more in the detailed design and development of beverage-brewing and dispensing machines; isn't that right?

A That cannot be disputed. It's true.

Howle W.D. Wash Trial. Tr. (EX1068), 54:8-11

Reply '923 Patent (Paper 18), 26;
Reply '430 Patent (Paper 18), 27.

Howle's Purported 1,300 Hours Designing and Analyzing Coffee Systems Do Not Add Up to the Required 5 Years of Experience

How much of those 1,300 hours was spent designing components of single-serve brewing systems?

A. I would also have to put a fairly large margin of error on that, but I would say approximately, 100 hours.

Howle Depo. Tr. '923 & '430 Patent IPR (EX1066), 50:4-8

Reply '923 Patent (Paper 18), 26;
Reply '430 Patent (Paper 18), 27.

Howle Also Does Not Have Five Years of Experience In Similar Products

POSITA

- Bachelor's degree in engineering
- **Five years of experience in design of** mechanical beverage systems, **or similar products**
- Experience with sensors for recognizing an identifier

undisputed that Dr. Howle has experience in mechanical design including design of components used in mechanical beverage systems, and design of ***similar products*** that include heaters, pumps (piston pumps and peristaltic pumps), strain gauges, thermocouples, thermistors, photo emitter/detector circuitry, ultrasonic and inductive proximity sensors, Hall effect transducers, piezoelectric elements, pressure transducers, ultrasonic and impellor flow meters, acceleration gauges, interferometers, and custom line-of-business software systems. Ex.1067 at 101:3-

IRRELEVANT

Sur-Reply '923 Patent (Paper 19), 2;
Sur-Reply '430 Patent (Paper 19), 2-3;
Reply '923 Patent (Paper 18), 26-27;
Reply '430 Patent (Paper 18), 27-28.

Howle Also Does Not Have Five Years of Experience In Similar Products

POSITA

- Bachelor's degree in engineering
- **Five years of experience in design of** mechanical beverage systems, **or similar products**
- Experience with sensors for recognizing an identifier

12[3]; Ex.2017, ¶¶3-4, 9-10; *see also* Ex.1066 at 34:16-35:9. Dr. Howle also has extensive experience with medical devices, which utilize these components and operate similarly to beverage machines. Ex.1067 at 102:20-104:9. There can be no

IRRELEVANT

Sur-Reply '923 Patent (Paper 19), 3;
Sur-Reply '430 Patent (Paper 19), 3;
Reply '923 Patent (Paper 18), 26;
Reply '430 Patent (Paper 18), 27.

In Contrast, Jobin Easily Meets the Definition of a POSITA

- Bachelor's degrees in Mechanical Engineering and Industrial Design
- **30 years** of experience in design of mechanical beverage systems, or similar products
  - Actual hands-on coffee and beverage-system design experience (for companies like Sunbeam, PUR, Mr. Coffee, Margaritaville, Skybar, etc.), including a home-based beer dispensing system that utilized cartridge identification technologies.
  - Hired by the USPTO as an expert in coffee capsule technology
- Substantial experience with sensors for recognizing identifiers

Jobin's testimony should be given more weight

Jobin Decl. '923 & '430 Patent (EX1003), ¶¶5-30;
Jobin Depo. Tr. '430 IPR (EX2018), 37:12-19, 45:9-23, 67:22-70:19;
Jobin Depo. Tr. '923 IPR (EX1072), 37:12-19, 45:9-23, 67:22-70:19;
Reply '923 Patent (Paper 18), 27;
Reply '430 Patent (Paper 18), 28.